This document has been electronically approved and signed.

United States
Consumer Product Safety Commission

THIS MATTER IS NOT SCHEDULED FOR A BALLOT VOTE
A DECISIONAL MEETING FOR THIS MATTER IS SCHEDUED ON OCTOBER 19, 2022

TO: The Commission
Alberta E. Mills, Secretary

DATE: September 28, 2022

THROUGH: Austin C. Schlick, General Counsel
J. DeWane Ray, Acting Executive Director

FROM: Daniel R. Vice, Assistant General Counsel, Regulatory Affairs
Meridith L. Kelsch, Attorney, Regulatory Affairs

SUBJECT: Final Rule: Safety Standard for Clothing Storage Units

---

Staff is forwarding to the Commission a briefing package recommending that the Commission issue a final rule, pursuant to the Consumer Product Safety Act, to address the risk of injury associated with clothing storage units tipping over. The Office of the General Counsel is providing for the Commission's consideration a draft final rule that would establish requirements for clothing storage units.

Please indicate your vote on the following options:

I. Approve publication of the attached notice in the *Federal Register*, as drafted.

_____ _____
(Signature) (Date)

II. Approve publication of the attached notice in the *Federal Register*, with the following changes.

_____

_____

_____

_____

_____ _____
(Signature) (Date)

III. Do not approve publication of the attached notice in the *Federal Register*.

_____ _____

U.S. Consumer Product Safety Commission
4330 East-West Highway
Bethesda, MD 20814

National Product Testing and Evaluation Center
5 Research Place
Rockville, MD 20850

United States
Consumer Product Safety Commission

(Signature) (Date)

IV. Take other action specified below.

(Signature) (Date)

Attachment: Draft *Federal Register* notice: Safety Standard for Clothing Storage Units

U.S. Consumer Product Safety Commission
4330 East-West Highway
Bethesda, MD 20814

National Product Testing and Evaluation Center
5 Research Place
Rockville, MD 20850

Billing Code 6355-01-P

CONSUMER PRODUCT SAFETY COMMISSION

16 CFR Parts 1112 and 1261

[Docket No. CPSC-2017-0044]

Safety Standard for Clothing Storage Units

AGENCY: Consumer Product Safety Commission.

ACTION: Final rule.

SUMMARY: The U.S. Consumer Product Safety Commission (Commission, or CPSC) has determined that there is an unreasonable risk of injury and death, particularly to children, associated with clothing storage units (CSUs) tipping over. To address this risk, the Commission is issuing a rule regarding the stability of CSUs. This rule requires CSUs to be tested for stability, meet minimum stability requirements, bear labels containing safety and identification information, and display a hang tag providing performance and technical data about the stability of the CSU. The Commission issues this rule under the authority of the Consumer Product Safety Act (CPSA).

DATES: This rule will become effective on [**INSERT DATE 180 DAYS AFTER DATE OF PUBLICATION IN THE FEDERAL REGISTER**] and will apply to all CSUs that are subject to the rule that are manufactured after that date. The incorporation by reference of the publication listed in this rule is approved by the Director of the Federal Register as of [**INSERT DATE 180 DAYS AFTER DATE OF PUBLICATION IN THE FEDERAL REGISTER**].

FOR FURTHER INFORMATION CONTACT: Amelia Hairston-Porter, Trial Attorney, Division of Enforcement and Litigation, U.S. Consumer Product Safety Commission, 4330 East West Highway, Bethesda, MD 20814; telephone (301) 504-7663; e-mail: AHairstonporter@cpsc.gov.

SUPPLEMENTARY INFORMATION:

I. Background

As a general description, CSUs are freestanding furniture items, typically used for storing clothes. Examples of CSUs include chests, bureaus, dressers, chests of drawers, drawer chests, door chests, chifforobes, armoires, and wardrobes. CPSC is aware of numerous deaths and injuries resulting from CSUs tipping over, particularly onto children. To address the hazard associated with CSU tip overs, the Commission has taken several steps.

A. History

In June 2015, the Commission launched the Anchor It! campaign. This educational campaign includes print and broadcast public service announcements; information distribution at targeted venues, such as childcare centers; social media; blog posts; videos; and an informational website (www.AnchorIt.gov). The campaign explains the nature of the risk, provides safety tips for avoiding furniture and television tip overs,[1] and promotes the use of tip restraints to anchor furniture and televisions.

In addition, CPSC's Office of Compliance and Field Operations has investigated and recalled CSUs.[2] Between January 1, 2000 and July 1, 2022, 43 consumer-level recalls occurred to address CSU tip-over hazards. The recalled products were responsible for 341 tip-over incidents, including reports of 152 injuries and 12 fatalities.[3] These recalls involved 38 firms and affected approximately 21,530,000 CSUs.

In 2016, CPSC staff prepared a briefing package on furniture tip overs, looking at then-current levels of compliance with the voluntary standards, and the adequacy of the voluntary

[1] Although televisions are involved in CSU tip overs, this rule does not focus on television involvement because, in recent years, there has been a decline in CSU tip-over incidents that involve televisions and nearly all television incidents involved a box or cathode ray tube television, which are no longer common.
[2] For further information about recalls, see Tab J of the briefing package supporting this final rule.
[3] For the remaining incidents, either no injury resulted from the incident, or the report did not indicate whether an injury occurred.

standards.[4] In 2017, the Commission issued an advance notice of proposed rulemaking (ANPR), discussing the possibility of developing a rule to address the risk of injuries and death associated with CSU tip overs. 82 FR 56752 (Nov. 30, 2017).[5] The ANPR began a rulemaking proceeding under the CPSA (15 U.S.C. 2051-2089). In 2022, after considering comments received on the ANPR and extensive additional testing and analysis, the Commission issued a notice of proposed rulemaking (NPR), proposing to establish requirements regarding CSU stability. 87 FR 6246 (Feb. 3, 2022). The Commission is now issuing a final rule, establishing requirements regarding CSU stability.[6]

B. Final Rule

CPSC has identified 199 CSU tip-over fatalities to children that were reported to have occurred between January 1, 2000 and April 30, 2022. There were an estimated 60,100 injuries to children related to CSU tip overs that were treated in U.S. hospital emergency departments (EDs) from January 1, 2006 to December 31, 2021. Injuries and fatalities to children resulting from CSUs tipping over include soft tissue injuries, skeletal injuries and bone fractures, and fatalities resulting from skull fractures, closed-head injuries, compressional and mechanical asphyxia, and internal organ crushing leading to hemorrhage. CPSC estimates that when all CSUs in use comply with the performance requirements of the rule, the annual societal benefits will be $307.17 million, consisting of $41.71 million in reduced deaths and $265.46 million in reduced injuries. The total estimated annual cost of the final rule is significantly lower, at $250.90 million.

---

[4] Massale, J., Staff Briefing Package on Furniture Tipover, U.S. Consumer Product Safety Commission (2016), available at: https://www.cpsc.gov/s3fs-public/Staff%20Briefing%20Package%20on%20Furniture%20Tipover%20-%20September%2030%202016.pdf.

[5] The briefing package supporting the ANPR is available at: https://www.cpsc.gov/s3fs-public/ANPR%20-%20Clothing%20Storage%20Unit%20Tip%20Overs%20-%20November%2015%202017.pdf?5IsEEdW_Cb3ULO3TUGJiHEl875Adhvsg. After issuing the ANPR, the Commission extended the comment period on the ANPR. 82 Fed. Reg. 2382 (Jan. 17, 2018).

[6] The Commission voted TBD-TBD to approve this notice.

This preamble provides key information to explain and support the rule, derived from the materials listed below. For more detailed information, see these additional materials:

- CPSC staff's briefing package supporting the NPR[7];
- CPSC staff's public briefing to the Commission regarding the NPR briefing package, which includes a video demonstration of stability testing proposed in the NPR[8];
- the NPR[9];
- information provided in the docket for this rulemaking[10];
- information obtained at a public hearing on the NPR[11]; and
- CPSC staff's briefing package supporting this final rule.[12]

II. Statutory Authority

CSUs are "consumer products" that the Commission can regulate under the authority of the CPSA. *See* 15 U.S.C. 2052(a)(5). In this notice, the Commission issues a final rule under sections 7 and 9 of the CPSA, regarding performance requirements, warnings, and stockpiling, and under section 27(e) of the CPSA, regarding performance and technical data.

A. Performance and Warning Requirements

Section 7 of the CPSA authorizes the Commission to issue a mandatory consumer product safety standard that consists of performance requirements or requirements that the product be marked with, or accompanied by, warnings or instructions. *Id*. 2056(a). Any requirement in the standard must be "reasonably necessary to prevent or reduce an unreasonable

[7] The briefing package supporting the NPR is available at: https://www.cpsc.gov/s3fs-public/Proposed%20Rule-%20Safety%20Standard%20for%20Clothing%20Storage%20Units.pdf.
[8] A recording of the public briefing is available at: https://www.youtube.com/watch?v=LIY1wfyOwDk.
[9] The NPR is available at: https://www.federalregister.gov/documents/2022/02/03/2022-01689/safety-standard-for-clothing-storage-units.
[10] The docket for this rulemaking, CPSC-2017-0044, is available at: www.regulations.gov.
[11] A public hearing was held on April 6, 2022. Submissions forwarded to the agency by presenters before the public hearing, and the transcript of the hearing are available in the docket for this rulemaking, CPSC-2017-0044, at: www.regulations.gov. The public hearing is available for viewing at: https://www.cpsc.gov/Newsroom/Public-Calendar/2022-04-06-100000/Public-Hearing-Safety-Standard-for-Clothing-Storage-Units.
[12] The briefing package supporting the final rule is available at: TBD.

risk of injury" associated with the product. *Id*. Section 7 requires the Commission to issue such a standard in accordance with section 9 of the CPSA. *Id*.

Section 9 of the CPSA specifies the procedure the Commission must follow to issue a consumer product safety standard under section 7. *Id*. 2058. Under section 9, the Commission may initiate rulemaking by issuing an ANPR or NPR; it must promulgate the rule in accordance with section 553 of the Administrative Procedure Act (5 U.S.C. 553); and it must publish an NPR that contains the text of the proposed rule, alternatives the Commission considered, and a preliminary regulatory analysis. The Commission also must provide an opportunity for interested parties to submit written and oral comments on the proposed rule. *Id*. 2058(a), (c), (d)(2). Accordingly, the Commission initiated this rulemaking with an ANPR in November 2017, and it published an NPR in February 2022, which included the required content and sought written comments on all aspects of the proposed rule. The Commission also provided the opportunity for interested parties to make oral presentations of data, views, or arguments on the proposed rule at an online public hearing held on April 6, 2022.

To issue a final rule under section 9 of the CPSA, the Commission must make certain findings and publish a final regulatory analysis. 15 U.S.C. 2058(f). Under section 9(f)(1) of the CPSA, the Commission must consider, and make appropriate findings to be included in the rule, concerning the following issues:

- the degree and nature of the risk of injury the rule is designed to eliminate or reduce;
- the approximate number of consumer products subject to the rule;
- the need of the public for the products subject to the rule and the probable effect the rule will have on the cost, availability, and utility of such products; and
- the means to achieve the objective of the rule while minimizing adverse effects on competition, manufacturing, and commercial practices.

Id. 2058(f)(1). Under section 9(f)(3) of the CPSA, the Commission may not issue a consumer product safety rule unless it finds (and includes in the rule):

- that the rule, including the effective date, is reasonably necessary to eliminate or reduce an unreasonable risk of injury associated with the product;
- that issuing the rule is in the public interest;
- if a voluntary standard addressing the risk of injury has been adopted and implemented, that either compliance with the voluntary standard is not likely to result in the elimination or adequate reduction of the risk or injury, or there is unlikely to be substantial compliance with the voluntary standard;
- that the benefits expected from the rule bear a reasonable relationship to its costs; and
- that the rule imposes the least burdensome requirement that prevents or adequately reduces the risk of injury.

Id. 2058(f)(3). The final regulatory analysis must include:

- a description of the potential benefits and costs of the rule, including benefits and costs that cannot be quantified, and those likely to receive the benefits and bear the costs;
- a description of alternatives to the final rule that the Commission considered, a summary description of their potential benefits and costs, and a brief explanation of the reason the alternatives were not chosen; and
- a summary of any significant issues raised by commenters in response to the preliminary regulatory analysis, and a summary of the Commission's assessment of those issues.

Id. 2058(f)(2).

B. Performance and Technical Data

Section 27(e) of the CPSA authorizes the Commission to issue a rule to require manufacturers of consumer products to provide "such performance and technical data related to

performance and safety as may be required to carry out the purposes of [the CPSA]." *Id.* 2076(e). The Commission may require manufacturers to provide this information to the Commission or, at the time of original purchase, to prospective purchasers and the first purchaser for purposes other than resale, as necessary to carry out the purposes of the CPSA. *Id.* Section 2(b) of the CPSA states the purposes of the CPSA, including:

- protecting the public from unreasonable risks of injury associated with consumer products; and
- assisting consumers in evaluating the comparative safety of consumer products.

Id. 2051(b)(1), (b)(2).

III. The Product and Market

A. Description of the Product

This rule defines a "CSU" as a consumer product that is a *freestanding* furniture item, with *drawer(s)* and/or *door(s)*, that may be reasonably expected to be used for storing clothing, that is designed to be configured to greater than or equal to 27 inches in height, has a mass greater than or equal to 57 pounds with all *extendable elements* filled with at least 8.5 pounds/cubic foot times their *functional volume* (cubic feet), has a total *functional volume* of the *closed storage* greater than 1.3 cubic feet, and has a *total functional volume* of the *closed storage* greater than the sum of the total *functional volume* of the *open storage* and the total volume of the *open space*. Common names for CSUs include, but are not limited to: chests, bureaus, dressers, armoires, wardrobes, chests of drawers, drawer chests, chifforobes, and door chests. CSUs are available in a variety of designs (*e.g.*, vertical or horizontal dressers), sizes (*e.g.*, weights and heights), dimensions, and materials (*e.g.*, wood, plastic, leather, manufactured wood, or fiber board). Consumers may purchase CSUs that have been assembled by the manufacturer, or they may purchase CSUs as ready-to-assemble (RTA) furniture.

The CSU definition includes several criteria to help distinguish CSUs from other furniture. Details regarding these criteria are discussed in section **IX. Description of and Basis for the Rule**. Key features include that, as freestanding furniture items, CSUs remain upright without needing to be attached to a wall or other structure. Built-in storage units are not considered freestanding, and therefore, they are not CSUs. CSUs typically are intended and used for storing clothing, and therefore, they are commonly used in bedrooms. However, consumers may also use CSUs in rooms other than bedrooms and to store items other than clothing in them. For this reason, whether a product is a CSU depends on whether it meets the criteria in the definition, rather than what the name of the product is or what is the marketed use for the product. The criteria in the definition regarding height and closed storage volume aim to address the utility of a unit for holding multiple clothing items. Some examples of furniture items that, depending on their design, may not meet the criteria in the definition, and therefore, may not be considered CSUs are: shelving units, office furniture, dining room furniture, laundry hampers, built-in closets, and single-compartment closed rigid boxes (storage chests).

CSUs may be marketed, packaged, or displayed as intended for children 12 years old and younger. Examples of such children's products include CSUs with pictures or designs on them that would appeal to children; CSU designs that would be useful for children; or CSUs that are part of a matching set with a crib, or similar infant product. However, CSUs are more commonly general-use products that are not specifically intended for children 12 years old and younger. This rule applies to both CSUs that are children's products and CSUs that are not children's products.

B. The Market[13]

Retail prices of CSUs vary substantially. The least expensive units retail for less than $100, while more expensive units retail for several thousand dollars. Based on information provided by large furniture associations during the NPR comment period, the estimated average price of a CSU is approximately $338.

CPSC staff used multiple sources of information to estimate annual revenues from CSU sales. Considering U.S. Census Bureau estimates of retail sales by industry classification, revenue estimates for retail sales from furniture stores, and estimates of the portion of furniture sales that consist of CSUs that fall within the scope of this rule, CPSC estimates that retail sales of CSUs in 2021 totaled approximately $6.99 billion.

Based on the estimated retail sales revenue of $6.99 billion in 2021, and the average estimated CSU price of approximately $338, CPSC estimated that there were approximately 20.64 million units sold in the United States in 2021. On average, CPSC assumes that there are approximately 10,000 individual CSUs of each model that are sold. Accordingly, staff estimates that there were 2,064 different models of CSUs sold in 2021.

CPSC also estimated the number of CSUs in use, based on historic sales estimates and statistical distribution of CSU failure rates, and adjusted these estimates iteratively to reflect the decreasing number of CSUs that would remain in use over time. Based on this information, CPSC estimates that the average lifecycle of a CSU is 15 years; that there were approximately 229.94 million CSUs that were in use in the United States in 2021; and that there were approximately 6,365 different models of CSUs in use in 2021.

[13] For more details about market information, see Tab H of the final rule briefing package.

IV. Risk of Injury

A. Incident Data[14]

For the NPR, CPSC staff analyzed reported fatalities, reported nonfatal incidents and injuries, and calculated national estimates of injuries treated in EDs that were associated with CSU instability or tip overs. For this final rule, staff updated the analysis to include information CPSC received after staff prepared the NPR briefing package. These updates include new incidents (that occurred during or after the time frames included in the NPR), as well as recharacterizations of incidents that were included in the NPR, when warranted by new information.

Each year, CPSC issues an annual report on furniture instability and tip overs.[15] The information provided for this rulemaking is drawn from a subset of data from those annual reports, as well as from the National Electronic Injury Surveillance System[16] (NEISS), which includes reports of injuries treated in EDs, and the Consumer Product Safety Risk Management System[17] (CPSRMS). For this rulemaking, staff focused on incidents that involved products that would be considered CSUs under the rule.[18] Staff considered incidents that involved a CSU tipping over, as well as incidents of CSU instability with indications of impending tip over. Tip-over incidents are a subset of product instability incidents, and involve CSUs actually falling over. Product instability incidents are a broader category that includes tip-over incidents, but may also include incidents where CSUs did not fully tip over. Staff considered instability

[14] For details about incident data, see Tab A of the NPR and final rule briefing packages.
[15] These annual reports are available at: https://www.cpsc.gov/Research--Statistics/Furniture-and-Decor-1.
[16] Data from NEISS is based on a nationally representative probability sample of about 100 hospitals in the United States and its territories. NEISS data can be accessed from the CPSC website under the "Access NEISS" link at: https://www.cpsc.gov/Research--Statistics/NEISS-Injury-Data.
[17] CPSRMS is the epidemiological database that houses all anecdotal reports of incidents received by CPSC, "external cause"-based death certificates purchased by CPSC, all in-depth investigations (IDI) of these anecdotal reports, as well as investigations of select NEISS injuries. Examples of documents in CPSRMS include: hotline reports, Internet reports, news reports, medical examiner's reports, death certificates, retailer/manufacturer reports, and documents sent by state/local authorities, among others.
[18] Staff considered incidents that involved chests, bureaus, dressers, armoires, wardrobes, portable clothes lockers, and portable closets.

incidents relevant, because product instability can lead to a tip over, and the same factors can contribute to instability and tip overs.[19]

Staff used the same information sources and inclusion criteria as the NPR for the updated information. These data represent the minimum number of incidents or fatalities during the time frames described. Data collection is ongoing for CPSRMS and is considered incomplete for 2020, and after. CPSC may receive additional reports for those years in the future.[20]

1. Fatal Incidents

Based on NEISS and CPSRMS data, CPSC staff identified 199 reported CSU tip-over fatalities to children (*i.e.*, under 18 years old), 11 reported fatalities to adults (*i.e.*, ages 18 through 64 years), and 24 reported fatalities to seniors (*i.e.*, ages 65 years and older) that were reported to have occurred between January 1, 2000 and April 30, 2022.[21] Of the 199 reported CSU tip-over child fatalities, 95 (48 percent) involved only a CSU (with no television)[22] tipping over. Of the child fatalities, 196 (98 percent) involved a chest, bureau, or dresser; two involved a wardrobe; and one involved an armoire. Of the 35 reported adult and senior fatalities, 34 (97 percent) involved only a CSU (*i.e.*, not a television and CSU) tipping over. Of the adult and senior fatalities, 31 (89 percent) involved a chest, bureau, or dresser; two involved a wardrobe; one involved an armoire; and one involved a portable storage closet.

[19] This preamble refers to tip-over incidents and instability incidents collectively as tip-over incidents.
[20] Among other things, CPSRMS houses all IDI reports, as well as the follow-up investigations of select NEISS injuries. As such, it is possible for a NEISS injury case to be included in the national injury estimate, while its investigation report is counted among the anecdotal nonfatal incidents, or for a NEISS injury case to appear on both the NEISS injury estimate and fatalities, if the incident resulted in death while receiving treatment.
[21] Different time frames are presented for NEISS, CPSRMS, fatal, and nonfatal data because of the timeframes in which staff collected, received, retrieved, and analyzed the data. One reason for varied timeframes is that staff drew data from previous annual reports and other data-collection reports (which used varied start dates), and then updated the data set to include more recent data. Another reason is that CPSRMS data are available on an ongoing basis, whereas NEISS data are not available until several months after the end of the previous calendar year.
[22] Although televisions are involved in CSU tip overs, this rule does not focus on television involvement because, in recent years, there has been a decline in CSU tip-over incidents that involve televisions, and nearly all television incidents involved a box or cathode ray tube television, which are no longer common.

Of the years for which reporting is considered complete—2000 through 2019—there have been between two and 21 child fatalities each year from CSU tip overs, and 0 to five fatalities to adults and seniors each year. Although reporting is considered incomplete for 2020 and later years, CPSC is already aware of one child fatality in 2020, and five child fatalities in 2021 associated with CSU tip overs without televisions.

Of the 199 reported child fatalities from tip overs, 171 involved children 3 years old or younger; 12 involved 4-year-olds; seven involved 5-year-olds; four involved 6-year-olds; two involved 7-year-olds; and three involved 8-year-olds. Therefore, most reported CSU tip-over fatalities involved children 3 years old or younger.

CSU tip-over fatalities to children were most commonly the result of torso injuries when only a CSU was involved, and were more commonly the result of head injuries when both a CSU and television tipped over. For the 95 child fatalities not involving a television, 60 resulted from torso injuries (chest compression); 14 resulted from head/torso injuries; 12 resulted from head injuries; six involved unknown injuries; and three involved a child's head, torso, and limbs pinned under the CSU. For the 104 child fatalities that involved both a CSU and television tipping over, 91 resulted from head injuries (blunt head trauma); six resulted from torso injuries (chest compression resulting from the child being pinned under the CSU); four involved unknown injuries; two resulted from head/torso injuries; and one involved head/torso/limbs.

2. Reported Nonfatal Incidents

CPSC staff identified 1,154 nonfatal CSU tip-over incidents for all ages that were reported to have occurred between January 1, 2005 and April 30, 2022. CPSRMS reports are considered anecdotal because, unlike NEISS data, they cannot be used to identify statistical estimates or year-to-year trend analysis, and because they include reports of incidents in which no injury resulted. Although these anecdotal data do not provide for statistical analyses, they

provide detailed information to identify hazard patterns, and they provide a minimum count of injuries and deaths.

Of the 1,154 reported incidents, 67 percent (776 incidents) involved only a CSU, and 33 percent (378 incidents) involved both a CSU and television tipping over. Of the 1,154 incidents, 99.5 percent (1,148 incidents) involved a chest, bureau, or dresser; less than 1 percent (5 incidents) involved an armoire; and less than 1 percent (1 incident) involved a wardrobe.

For the years for which reporting is considered complete—2005 through 2019—there were between six and 260 reported nonfatal CSU tip-over incidents each year, with 2016 (260 incidents), 2017 (103 incidents), and 2018 (92 incidents) reporting the highest number of incidents.

Of the 1,154 nonfatal CSU tip-over incidents reported, 423 did not mention any specific injuries; 719 reported one injury; and 12 reported two injuries, resulting in a total of 743 injuries reported among all of the reported nonfatal incidents. Of these 743 reported injuries, 67 (9 percent) resulted in hospital admission; 318 (43 percent) were treated in EDs; 36 (5 percent) were seen by medical professionals; and the level of care is unknown[23] for the remaining 322 (43 percent).

Of the victims whose ages were known, there were far more injuries suffered by children 3 years old and younger, than to older victims; and the injuries suffered by these young children tended to be more severe, compared to older children and adults/seniors, as indicated by hospital admission and ED-treatment rates.

[23] These reports include bruising, bumps on the head, cuts, lacerations, scratches, application of first-aid, or other indications of at least a minor injury that occurred, without any mention of aid rendered by a medical professional. There were three NEISS cases in which the victim went to the ED, but then left without being seen.

3. National Estimates of ED-Treated Injuries[24]

According to NEISS, there were an estimated 84,100 injuries, for an annual average of 5,300 estimated injuries related to CSU tip overs for all ages that were treated in U.S. hospital EDs from January 1, 2006 to December 31, 2021. Of the estimated 84,100 injuries, 60,100 (72 percent) were to children, which is an annual average of 3,800 estimated injuries to children over the 16-year period.

For all ages, an estimated 82,600 (98 percent) of the ED-treated injuries involved a chest, bureau, or dresser. Similarly, for child injuries, an estimated 59,500 (99 percent) involved a chest, bureau, or dresser.[25] Of the ED-treated injuries to all ages, 92 percent were treated and released, and 4 percent were hospitalized. Among children, 93 percent were treated and released, and 3 percent were hospitalized.

For each year from 2006 through 2021, there were an estimated 1,800 to 5,900 ED-treated injuries to children from CSU tip overs. The estimated annual number of ED-treated injuries to adults and seniors from CSU tip overs is fairly consistent over most of the 16-year period, with an overall yearly average of 1,500 estimated injuries. However, data were insufficient to support reliable statistical estimates for adults and seniors for 2014, 2015, 2019, and 2020.[26]

Of the estimated ED-treated injuries to children, most involved 2- and 3-year-olds, followed by 1- and 4-year-olds. An estimated 15,700 involved 2-year-olds and an estimated 14,000 involved 3-year-olds, whereas an estimated 8,500 involved 1-year-olds and an estimated

[24] Estimates are rounded to the nearest hundred and may not sum to total, due to rounding. NEISS estimates are reportable when the sample count is greater than 20, the national estimate is 1,200 or greater, and the coefficient of variation (CV) is less than 0.33.

[25] Data on armoires, wardrobes, portable closets, and clothes lockers were insufficient to support reliable statistical estimates.

[26] Consistent with the NPR, for 2012 through 2021, there was a statistically significant linear decline in child injuries involving all CSUs (including televisions). Unlike in the NPR, there was also a statistically significant linear decline in injuries to children involving CSU-only tip overs for 2012 through 2021. Nevertheless, data indicate that substantial numbers of child injuries and fatalities continue to result from CSU tip overs.

7,900 involved 4-year-olds. Fewer incidents involved older children, with an estimated 2,600 involving 5-year-olds, 1,900 involving 6-year-olds, and 6,800 involving children 7 to 17 years old. Of an estimated 60,100 ED-treated CSU tip-over injuries to children, an estimated 22,000 (37 percent) resulted in contusions/abrasions; an estimated 15,900 (26 percent) resulted in internal organ injury (including closed-head injuries); an estimated 8,300 (13 percent) resulted in lacerations; an estimated 5,500 (9 percent) resulted in fractures; and the remaining estimated 8,400 (14 percent) resulted in other diagnoses.

B. Details Concerning Injuries[27]

To assess the types of injuries that result from CSU tip overs, CPSC staff focused on incidents involving children, because the vast majority of CSU tip overs involve children. The types of injuries resulting from furniture tipping over onto children include soft tissue injuries, such as cuts and bruises (usually a sign of internal bleeding); skeletal injuries and bone fractures to arms, legs, and ribs; and potentially fatal injuries due to skull fractures, closed-head injuries, compressional and mechanical asphyxia, and internal organ crushing leading to hemorrhage. These types of injuries can result from tip overs involving CSUs alone, or from CSUs with televisions.

As explained, head injuries and torso injuries are common in CSU tip overs involving children. The severity of injuries depends on a variety of factors, but primary determinants include the force generated at the point of impact, the entrapment time, and the body part impacted. The head, neck, and chest are the most vulnerable body parts. The severity of injury can also depend on the orientation of the child's body or body part when it is hit or trapped by the CSU. Sustained application of a force that affects breathing can lead to compressional asphyxia and death. In most CSU tip-over cases, serious injuries and death are a result of blunt

[27] For details about injuries, see Tab B of the NPR and final rule briefing packages.

force trauma to the head and intense pressure on the chest causing respiratory and circulatory system impairment.

Head injuries are produced by high-impact forces applied over a small area and can have serious clinical consequences, such as concussions and facial nerve damage. Such injuries are often fatal, even in cases where the child is rescued immediately and there is rapid medical intervention. An incident involving blunt head trauma can result in immediate death or loss of consciousness. Autopsies from CSU tip-over fatalities to children reported crushing injuries to the skull and regions of the eye and nose. Brain swelling, deep scalp hemorrhaging, traumatic intracranial bleeding, and subdural hematomas were often reported. These types of injuries are typical of crush injuries caused by blunt head trauma and often have a fatal outcome. Children who survive such injuries may suffer neurological deficits, require neurosurgical interventions, and can face lifelong disabilities.

Compressional and mechanical asphyxia are other potential causes of injury and death in CSU tip-over incidents. Asphyxia can be fatal within minutes. In multiple CSU tip-over incidents, there was physical evidence of chest compression, visible as linear marks or abrasions across the chest and neck, consistent with the position of the CSU. Compressional and mechanical asphyxia can result from mechanical forces generated by the mass of an unyielding object, such as furniture, acting on the thoracic and abdominal area of the body, which prevents thorax expansion and physically interferes with the coordinated diaphragm and chest muscle movement that normally occurs during breathing. Torso injuries, which include compressional and mechanical asphyxia, are the most common form of injury for non-television CSU fatalities. External pressure on the chest that compromises the ability to breathe by restricting respiratory movement or on the neck can cause oxygen deprivation (hypoxia). Oxygen deprivation to the brain can cause unconsciousness in less than 3 minutes and may result in permanent brain

damage or death when pressure is applied directly on the neck by the CSU or a component of the CSU (such as the edge of a drawer).

In addition to chest compression, pressure on the neck by a component of the CSU can also result in rapid strangulation due to pressure on the blood vessels in the neck. The blood vessels that take blood to and from the brain are relatively unprotected in the soft tissues of the neck and are vulnerable to external forces. Sustained compression of either the jugular veins or the carotid arteries can lead to death. Petechial hemorrhages of the head, neck, chest, and the periorbital area were reported in autopsy reports of CSU tip-over incidents.

The severity of the injury or likelihood of death can be reduced if a child is rescued quickly. However, children's ability to self-rescue is limited because of their limited cognitive awareness of hazards, limited skills to react quickly, and limited strength to remove the fallen CSU. Moreover, many injuries can result in immediate death or loss of consciousness, making self-rescue impossible.

C. Hazard Characteristics[28]

To identify hazard patterns associated with CSU tip overs, CPSC focused on incidents involving children and CSUs without televisions because the majority of fatal and nonfatal incidents involve children and, in recent years, there was a statistically significant decrease in the number of ED-treated CSU tip-over incidents that appeared to be driven by a decline in tip overs involving CSUs with televisions. Staff used NEISS and CPSRMS reports to identify hazard patterns, including IDI reports, and also considered child development and capabilities, as well as online videos of real-life child interactions with CSUs and similar furniture items (including videos of tip-over incidents).

[28] For additional information about hazard patterns, see Tab C of the NPR and final rule briefing packages.

For this final rule, CPSC staff updated this analysis to include incident information that CPSC received after staff prepared the NPR briefing package. This update is consistent with the new incident information included in the analysis in section **IV. Risk of Injury**, although the totals in this section may be lower than those above. This is, in part, because this section focuses only on incidents involving children and only a CSU (*i.e.*, no television). This is also because this section aims to assess hazard characteristics associated with tip overs resulting from child interactions. As such, for this assessment, staff did not focus on incidents in which there was no indication of a child's interaction leading to the tip over. The new information added to this section since the NPR consists of six fatal and 97 nonfatal CPSRMS tip-over incidents and 168 nonfatal NEISS tip-over incidents that involved children and CSUs without televisions. Overall, staff did not identify any new hazard patterns or interaction scenarios in the new data.

1. Filled Drawers

Of the 95 fatal CPSRMS incidents involving children and only CSUs, 56 provided information about whether the CSU drawers contained items at the time of the tip over. Of those 56 incidents, 53 (95 percent) involved partially filled or full drawers. Of the 366 nonfatal CPSRMS tip overs involving children and only CSUs, drawer-fill level was reported for 78 incidents. Of these 78 incidents, 70 (90 percent) involved partially filled or full drawers.[29] CPSRMS incidents indicate that most items in the drawers were clothing, although a few mentioned other items along with clothing (*e.g.*, diaper bag, toys, papers).

2. Interactions

Of the 95 fatal CPSRMS tip overs involving children and only a CSU, 49 reported the type of interaction the child had with the CSU at the time of the incident. Of these 49 incidents, the most commonly reported interaction was a child climbing on the CSU (37 incidents or 76

[29] Nonfatal NEISS incident reports did not contain information on drawer fill level or contents.

percent); followed by a child sitting, lying, or standing in a drawer (8 incidents or 16 percent); and a child opening drawers (4 incidents or 8 percent). Climbing was the most common reported interaction for children 3 years old and younger.

Of the 366 nonfatal CPSRMS tip-over incidents involving children and only CSUs, the type of interaction was reported in 226 incidents. Of these, the most common interaction was opening drawers (123 incidents or 54 percent); followed by climbing on the CSU (59 incidents or 26 percent); and putting items in/taking them out of a drawer (18 incidents or 8 percent). Opening drawers and climbing were also the most common reported interactions for children 3 years old and younger.

Of the 1,630 nonfatal NEISS incidents involving children and only CSUs, the type of interaction was reported in 646 incidents. Of these, the child was injured after another child's interaction with the CSU in 26 incidents; the remaining 620 incidents involved the injured child interacting with the CSU. Of these 620 incidents, the most common interaction was children climbing on the CSU (475 incidents or 77 percent), followed by opening drawers (49 incidents or 8 percent). For children 3 years old or younger, climbing constituted 80 percent of reported interactions.

Thus, in fatal incidents, a child climbing on the CSU was, by far, the most common reported interaction; and in nonfatal incidents, opening drawers and climbing were the most common reported interactions. These interactions are examined further, below.

To learn more about children's interactions with CSUs during tip-over incidents, CPSC staff also reviewed videos, available from news sources, articles, and online, that depicted children interacting with CSUs and similar products, and showed CSU tip overs. Videos of children climbing on CSUs and similar items showed a variety of climbing techniques, including stepping on the top of the drawer face; stepping on drawer knobs; using the area between drawers as a foothold; children gripping the top of an upper drawer with their hands; pushing up

using the top of a drawer; and using items to assist in climbing. Videos of children in drawers of CSUs and other similar products include children leaning forward and backward out of a drawer; sitting, lying, and standing in a drawer; and bouncing in a drawer. Some videos also show multiple children climbing a CSU or in a drawer simultaneously.

a. Climbing

As discussed, climbing on the CSU was one of the primary interactions in CSU tip over incidents involving children and only a CSU. It was the most common reported interaction (76 percent) in fatal CPSRMS incidents; it was the most common reported interaction (77 percent) in nonfatal NEISS incidents; and it was the second most common reported interaction (26 percent) in nonfatal CPSRMS incidents. Fatal and nonfatal climbing incidents most often involved children 3 years old and younger.

The prevalence of children climbing during CSU tip overs is consistent with the expected motor development of children. Between approximately 1 and 2 years old, children can climb on and off of furniture without assistance, use climbers, and begin to use playground apparatuses independently; and 2-year-olds commonly climb. The University of Michigan Transportation Research Institute (UMTRI) focus groups on child climbing (the UMTRI study is described in section **VII. Technical Analysis Supporting the Rule**) demonstrated these abilities, with child participants showing interest in climbing CSUs and other furniture.

b. Opening Drawers

Opening the drawers of a CSU also was a common interaction in CSU tip overs involving children and only a CSU. It was the most common reported interaction (54 percent) in nonfatal CPSRMS incidents; it was the second most common reported interaction (8 percent) in nonfatal NEISS incidents; and it was the third most common reported interaction (8 percent) in fatal CPSRMS incidents.

In fatal CPSRMS incidents, opening-drawer interactions most commonly involved children 2 years old and younger and in nonfatal CPSRMS and NEISS incidents, this interaction most commonly involved 2- and 3-year-olds. Children of all ages were able to open at least one drawer, and incident data indicate that children commonly were able to open multiple drawers. For the NPR data set, looking at both fatal and nonfatal CPSRMS tip overs involving children and only CSUs, where the interaction involved opening drawers, overall, about 53 percent involved children opening one drawer; 10 percent involved opening two drawers; and almost 17 percent involved opening "multiple" drawers. In 23 incidents, children opened "all" the drawers, and it is possible that additional incidents, mentioning a specific number of open drawers (between 2 and 8), also involved all the drawers being opened. The youngest child reported to have opened all drawers was 13 months old.

Of the new CPSRMS incidents identified after the NPR data set, none of the fatal and 30 of the nonfatal incidents provided information about the number of open drawers. Of these 30 incidents, only 1 had no drawers open; 11 involved 1 open drawer; 7 involved half or fewer of the drawers open; 1 involved more than half of the drawers open; 7 involved all of the drawers open; and 3 involved multiple open drawers, without specifying the number or proportion. Consistent with these incident data, the UMTRI child climbing study found that caregivers commonly reported that their children opened and closed drawers when interacting with furniture.

It is possible for CSUs to tip over from the forces generated by open drawers and their contents alone, without additional interaction forces. However, pulling on a drawer to open it can apply increased force that contributes to instability. Once a drawer is fully opened, any additional pulling no longer moves the drawer away from the CSU, but instead imparts an overturning moment to the CSU. The pull force, and the height of the drawer pull location, relative to the floor, are relevant considerations. To examine this factor, staff assessed 15 child incidents in

which the height of the force application could be calculated based on descriptions of the incidents. Force application heights ranged from less than 1 foot to almost 4 feet (46.5 inches), and children pulled on the lowest, the highest, and the drawers in between.

c. Opening Drawers and Climbing Simultaneously

CPSC staff also examined incidents in which both climbing and open drawers occurred simultaneously using the NPR data set. Of the 35 fatal CPSRMS climbing incidents, 13 reported the number of drawers open. In all of these incidents, the reported number of drawers open was one; although, based on further analysis, the number of open drawers could be as high as eight in one incident.[30] Of the 32 nonfatal CPSRMS climbing incidents, 15 gave some indication of the number of open drawers. Of these, seven reported that one drawer was open; two reported that half or less of the drawers were open; four reported that multiple drawers were open; and two reported that all the drawers were open. Of the 412 climbing incidents in the nonfatal NEISS data, 28 gave some indication of the number of open drawers. Of these, 11 reported that one drawer was open; 12 reported that multiple drawers were open; one reported that two drawers were open; and two reported that all drawers were open.

Incidents involving CSUs with doors also indicate that children are able to open the doors, at which point they can interact further with the CSU, such as climbing on the CSU. Using the NPR data set, staff found two fatal CPSRMS and four nonfatal CPSRMS tip-over incidents involving wardrobes and armoires, which include doors. In one of the fatal incidents, the victim was found inside a wardrobe that had two doors and one drawer, suggesting that the child opened the doors of the wardrobe. In the other fatal incident, the victim was found under a two-door wardrobe. In most of the nonfatal incidents involving wardrobes or armoires, children were

[30] CPSC staff analysis suggests that seven or more drawers of an 8-drawer unit were open, and the child was in a drawer leaning out over the edge in a fatal incident. This analysis is described in Tab M of the NPR briefing package, as Model E.

reportedly interacting with items inside the unit, which would require them to open the doors. The ages of the children in these incidents ranged from 3 to 11 years, although opening doors is easily within the physical and cognitive abilities of younger children.

These incidents indicate that children can and do open CSU doors, at which point children can put their body weight on the door (*i.e.*, climb) or other extendable elements behind the doors, such as drawers, consistent with climbing behavior in reported CSU tip-over incidents and children's developmental abilities.

3. Flooring

Of the 95 fatal CPSRMS tip overs involving children and only CSUs, the type of flooring under the CSU was reported for 58 incidents. Of these, 47 (81 percent) involved carpeting, which includes rugs; nine (15 percent) involved wood, hardwood, or laminate wood flooring; and two (3 percent) involved tile or linoleum flooring. The reports for 32 of the fatal CPSRMS tip-over incidents involving carpet included photos with visible carpet. All carpet in these pictures appeared to be typical wall-to-wall carpeting.

Of the 366 nonfatal CPSRMS tip overs involving children and only CSUs, the type of flooring under the CSU was reported for 91 incidents. Of these, 67 (74 percent) involved carpeting, which includes rugs; 21 (23 percent) involved wood, hardwood, or laminate wood flooring; two (2 percent) involved tile or linoleum flooring; and one (1 percent) indicated that the front legs of the CSU were on carpet, while the back legs were on wood flooring.[31]

Thus, for incidents where flooring type was reported, carpet was, by far, the most prevalent flooring type.

[31] Flooring type was not reported in nonfatal NEISS incident reports.

4. Characteristics of Children in Tip-Over Incidents

a. Age of Children

Children in fatal CPSRMS tip-over incidents involving CSUs only, were 11 months through 7 years old. A total of 36 fatal incidents involved children under 2 years old; 31 involved 2-year-old children; 22 involved 3-year-olds; two involved 4-year-olds; one incident involved a 5-year old; one incident involved a 6-year old; and two incidents involved 7-year-olds. Overall, 94 percent of children in fatal CPSRMS incidents involving CSUs only, were 3 years old or younger.

Among the nonfatal CPSRMS tip-over incidents involving children and CSUs only, where age was reported, 3-year-olds were involved in the highest number of incidents (68 incidents), followed by 2-year-olds (62 incidents).

Nonfatal NEISS tip-over incidents involving children and CSUs only, follow a similar distribution, with the highest number of reported incidents involving 2-year-olds (430 incidents), followed by 3-year-olds (367 incidents), and children less than 2 years (282 incidents). Overall, 66 percent (1,079 of 1,630) of children involved in these incidents were 3 years old or younger.

b. Weight of Children

Among the 95 fatal CPSRMS tip-over incidents involving children and CSUs without televisions, the child's weight was reported in 49 incidents and ranged from 18 pounds to 45 pounds. Where weight was not reported, staff used the most recent Centers for Disease Control and Prevention (CDC) Anthropometric Reference to estimate the weight of the children.[32] Staff used the 50th percentile values of weight that correspond to the victims' ages to estimate the

[32] Fryar, C.D., Carroll, M.D., Gu, Q., Afful, J., Ogden, C.L. (2021). Anthropometric reference data for children and adults: United States, 2015–2018. National Center for Health Statistics. Vital Health Stat 3(46). The CDC Anthropometric Reference is based on a nationally representative sample of the U.S. population, and the 2021 version is based on data collected from 2015 through 2018. CPSC staff uses the CDC Anthropometric Reference, rather than the CDC Growth Chart, because it is more recently collected data and because the data are aggregated by year of age, allowing for estimates by year. CDC growth charts are available at: https://www.cdc.gov/growthcharts/clinical_charts.htm.

weight range of the children. For the remaining 46 fatal CPSRMS incidents without a reported weight, the estimated weight range was 19.6 pounds to 57.7 pounds.

Among the 366 nonfatal CPSRMS incidents involving children and CSUs only, the weights of 60 children were reported, ranging from 20 pounds to 125 pounds. Where weight was not reported, staff again estimated the weight of the children using the 50th percentile values of weight that correspond to the victims' ages from the most recent CDC Anthropometric Reference. The estimated child weights for the 195 nonfatal CPSRMS incidents without a reported child weight, but with a reported age (which included a 17-year-old), ranged from 19.6 pounds to 158.9 pounds.

Although nonfatal NEISS incident data did not include the children's weights, staff again estimated the children's weights by age, determining that for tip overs involving CSUs only, the estimated weights of the children ranged from 15.8 pounds to 158.9 pounds (this covered children from 3 months to 17 years old).

The weight of a child is particularly relevant for climbing incidents because weight is a factor in determining the force a child generates when climbing. For this reason, in the NPR, CPSC staff looked at the weights of children involved in climbing incidents, specifically. Of the 35 fatal CPSRMS child climbing incidents, the weight of the child was reported for 23 incidents, and ranged from 21.5 pounds to 45 pounds. For the remaining 12 climbing incidents in which the child's weight was not reported, CPSC staff estimated their weights, based on age, and the weights ranged from 23.8 pounds to 39 pounds. New fatal incidents that CPSC identified since the NPR data set involved two additional climbing incidents, one involving a 29-pound child and the other involving a 31-pound child.

For the NPR data set, of the 32 nonfatal CPSRMS child climbing incidents, the weight of the child was reported in eight incidents, and the weights ranged from 26 pounds to 80 pounds. For the remaining 24 incidents, staff estimated the weights based on age, and the weights ranged

from 25.2 pounds to 45.1 pounds. Weight was not reported in the nonfatal NEISS data; however, using the ages of the children in the 412 nonfatal NEISS child climbing incidents (9 months to 13 years old), staff estimates that their weights ranged from 19.6 pounds to 122 pounds.

V. Relevant Existing Standards[33]

In the United States, the primary voluntary standard that addresses CSU stability is ASTM F2057-19, *Standard Consumer Safety Specification for Clothing Storage Units*. In addition, CPSC staff identified three international consumer safety standards and one domestic standard that are relevant to CSUs:

- AS/NZS 4935: 2009, the Australian/New Zealand Standard for *Domestic furniture – Freestanding chests of drawers, wardrobes and bookshelves/bookcases – determination of stability*;
- ISO 7171 (2019), the International Organization for Standardization *International Standard for Furniture – Storage Units – Determination of stability*;
- EN14749 (2016), the European Standard, *European Standard for Domestic and kitchen storage units and worktops – Safety requirements and test methods*; and
- ANSI/BIFMA X6.5-2022, *Home Office and Occasional-Use Desk, Table and Storage Products*.[34]

This section describes these standards and provides CPSC staff's assessment of their adequacy to address CSU tip-over injuries and deaths.

[33] For additional information about relevant existing standards, see Tabs C, D, F, and N of the NPR briefing package, and Tab F of the final rule briefing package.
[34] The NPR discussed ANSI/SOHO S6.5-2008 (R2013), *Small Office/Home Office Furniture – Tests American National Standard for Office Furnishings*. Since the NPR, ANSI updated this standard; the revised version is ANSI/BIFMA X6.5-2022.

A. ASTM F2057-19

ASTM first approved and published ASTM F2057 in 2000, and it has since revised the standard seven times. The current version, ASTM F2057-19, was approved on August 1, 2019, and it published in August 2019. ASTM Subcommittee F15.42, Furniture Safety, is responsible for this standard. Since the first publication of ASTM F2057, CPSC staff has participated in the F15.42 subcommittee and task group meetings and worked with ASTM to improve the standard. In recent years, ASTM Subcommittee F15.42 has discussed and balloted changes to ASTM F2057-19. However, ASTM has not updated the standard.

1. Scope

ASTM F2057-19 is intended to reduce child injuries and deaths from hazards associated with CSUs tipping over and aims "to cover children up to and including age five." The standard covers CSUs that are 27 inches or more in height, freestanding, and defines "CSUs" as: "furniture item[s] with drawers and/or hinged doors intended for the storage of clothing typical with bedroom furniture." Examples of CSUs provided in the standard include: chests, chests of drawers, drawer chests, armoires, chifforobes, bureaus, door chests, and dressers. The standard does not cover "shelving units, such as bookcases or entertainment furniture, office furniture, dining room furniture, underbed drawer storage units, occasional/accent furniture not intended for bedroom use, laundry storage/sorting units, nightstands, or built-in units intended to be permanently attached to the building, nor does it cover 'Clothing Storage Chests' as defined in Consumer Safety Specification F2598."

2. Stability Requirements

ASTM F2057-19 includes two performance requirements for stability. The first is in section 7.1 of the standard, *Stability of Unloaded Unit*. This test consists of placing an empty CSU on a hard, level, flat surface; opening all doors (if any); and extending all drawers and pull-

out shelves to the outstop[35] or, in the absence of an outstop, to two-thirds of the operational sliding length. If the CSU tips over in this configuration, or is supported by any component that was not specifically designed for that purpose, it does not meet the requirement.

The second stability requirement is in section 7.2 of the standard, *Stability with Load*. This test consists of placing an empty CSU on a hard, level, flat surface, and gradually applying a test weight of 50 ± 2 pounds. For this test, only one door or drawer is open at a time, and the test weight is applied to that open feature. Each drawer or door is tested individually, and all other drawers and doors remain closed. If the CSU tips over in this configuration, or is supported by any component that was not specifically designed for that purpose, it does not meet this requirement.

3. Tip Restraint Requirements

ASTM F2057-19 requires CSUs to include a tip restraint that complies with ASTM F3096-14, *Standard Performance Specification for Tipover Restraint(s) Used with Clothing Storage Unit(s)*.[36] ASTM F2057-19 and F3096-14 define a "tipover restraint" as a "supplemental device that aids in the prevention of tip over." ASTM F3096-14 provides a test protocol to assess the strength of tip restraints, but does not evaluate the attachment to the wall or CSU. The test method specifies that the tester attach the tip restraint to a fixed structure and apply a 50-pound static load.

4. Labeling Requirements

ASTM F2057-19 requires CSUs to be permanently marked in a conspicuous location with warnings that meet specified content and formatting. The warning statements address the risk of children dying from furniture tip overs; not allowing children to stand, climb, or hang on CSUs; not opening more than one drawer at a time; placing the heaviest items in the bottom

[35] An outstop is a feature that limits outward motion of drawers or pull-out shelves.
[36] Approved October 1, 2014 and published October 2014.

drawer; and installing tip restraints. For CSUs that are not intended to hold a television, this is also addressed in the warning. Additionally, units with interlock systems must include a warning not to defeat or remove the interlock system. An interlock system is a device that prevents simultaneous opening of more drawers than intended by the manufacturer (like is common on file cabinets). The standard requires that labels be formatted in accordance with ANSI Z535.4, *American National Standard for Product Safety Signs and Labels*.

The standard also includes a performance requirement and test method for label permanence, which are consistent with requirements in other ASTM juvenile furniture product standards. The warning must be "in a conspicuous location when in use" and the back of the unit is not considered conspicuous; the standard does not define "conspicuous location when in use."

5. Assessment of Adequacy

The Commission concludes that the stability requirements in ASTM F2057-19 are not adequate to address the CSU tip-over hazard because they do not account for multiple open and filled drawers, carpeted flooring, and dynamic forces generated by children's interactions with the CSU, such as climbing or pulling on a drawer. As discussed earlier in this preamble, these factors are commonly involved in CSU tip-over incidents, often simultaneously; and, as discussed later in this preamble, testing indicates that these factors decrease the stability of CSUs.

Although the test in section 7.1 includes a test with all drawers/doors open, the unit is empty and no additional force is applied during this test. As such, this test does not reflect the added factors of open and filled drawers, even though consumers are likely to open drawers and fill CSUs with clothing; and it does not reflect dynamic forces generated by interactions. In addition, although the test in section 7.2 includes a test with a static weight applied to the top of one open drawer or door, it does not include the added factor of multiple open and filled drawers. Also, while the 50-pound weight is intended to represent the static weight of a 5-year-old child, it

does not reflect the additional moment[37] due to the forces when a child climbs the front of a CSU, even when considering only the forces generated by very young children. As the UMTRI study (described in the NPR, and later in this preamble) found, the forces children can exert while climbing a CSU exceed their static weights. Finally, neither test accounts for the effect of carpeting, which is common flooring in homes (particularly in bedrooms), is often present in tip-over incidents, and decreases CSU stability. Thus, by testing CSUs with open drawers empty, a 50-pound static weight, and without accounting for the effect of carpeting, ASTM F2057-19 does not reflect real-world use conditions that decrease the stability of CSUs.

Staff also looked at whether CSUs involved in tip-over incidents comply with ASTM F2057-19 because it would give an indication of whether F2057 is effective at preventing tip overs, and therefore, is adequate.[38] For 81 of the 95 fatal CPSRMS tip-over incidents involving children and CSUs only,[39] staff was unable to determine whether the CSU met the ASTM F2057-19 stability requirements, although staff did determine that an exemplar of one of these CSUs complied with the requirements. For the remaining 14 CSUs, staff determined that two of the CSUs complied with the ASTM F2057-19 stability requirements; one CSU met the stability requirements when a test weight at the lower permissible weight range was used; and 11 units did not meet the stability requirements. With the adjusted information for nonfatal CPSRMS tip-over incidents involving children and CSUs only, staff determined that, of the 361 incidents for which staff assessed the compliance of the CSU, 50 met the ASTM F2057-19 stability requirements, 106 did not, and staff was unable to determine the compliance of the remaining 205 units. The number of CSUs that comply with the stability requirements in ASTM F2057-19,

[37] Moment, or torque, are engineering terms to describe rotational force acting about a pivot point, or fulcrum.
[38] Staff did not assess whether NEISS incidents involved ASTM-compliant CSUs because the reports do not contain specific information about the products.
[39] This represents information provided in the NPR and additional incidents and information identified after the NPR.

but were involved in tip overs, further demonstrates that the voluntary standard does not adequately reduce the risk of tip overs.

As noted in the NPR, CPSC also has some concerns with the effectiveness of the content in the warning labels required in ASTM F2057-19. For example, the meaning of "tipover restraint" may not be clear to consumers, and directing consumers not to open more than one drawer at a time is not consistent with consumer use. In addition, a focus group study indicated that consumers had trouble understanding the child climbing symbol required by the standard. CPSC staff also concluded that greater clarity about the required placement of the label would make the warning more effective.

For these reasons, the Commission finds that compliance with ASTM F2057-19 is not likely to adequately reduce the risk of injury associated with CSU tip overs.

6. Compliance with ASTM F2057

CPSC also assessed whether there is adequate compliance with the stability requirements in ASTM F2057-19. In 2016,[40] staff tested 61 CSU samples and found that 50 percent (31 of 61) did not comply with the stability requirements in ASTM F2057.[41] In 2018, CPSC staff assessed a total of 188 CSUs, including 167 CSUs selected from among the best sellers of major retailers, using a random number generator; four CSU models that were involved in incidents; and 17 units assessed as part of previous test data provided to CPSC. Of the 188 CSUs, 171 (91 percent) complied with the stability requirements in ASTM F2057. One CSU (0.5 percent) did not comply with the Stability of Unloaded Unit test, and 17 (9 percent) did not meet the Stability

[40] Although this testing involved ASTM F2057-14, the stability requirements were the same as in ASTM F2057-19. The test results are available at: https://www.cpsc.gov/s3fs-public/2016-Tipover-Briefing-Package-Test-Results-Update-August-16-2017.pdf?yMCHvzY_YtOZmBAAj0GJih1lXE7vvu9K.

[41] This testing also found that 91 percent of CSUs (56 of 61) did not comply with the labeling requirements in ASTM F2057-14, and 43 percent (26 of 61) did not comply with the tip restraint requirements.

with Load test. The unit that did not meet the requirements of the Stability of Unloaded Unit test also did not meet the requirements of the Stability with Load test.

B. AS/NZS 4935: 2009

AS/NZS 4935 is a voluntary standard prepared by Standards Australia's and Standards New Zealand's Joint Technical Committee CS-088/CS-091, Commercial/Domestic Furniture. There is only one version of the standard, the current version AS/NZA 4935:2009, which was approved on behalf of the Council of Standards Australia on August 28, 2009, and on behalf of the Council of Standards New Zealand on October 23, 2009. It was published on November 17, 2009.

1. Scope

AS/NZS 4935 aims to address furniture tip-over hazards to children. It describes test methods for determining the stability of domestic freestanding chests of drawers more than 500 mm (19.7 inch) high, freestanding wardrobes more than 500 mm high (19.7 inch), and freestanding bookshelves/bookcases more than 600 mm (23.6 inch) high.

2. Stability Requirements

Similar to ASTM F2057-19, AS/NZS 4935 includes two stability requirements. The first requires the unit, when empty, not to tip over when a 29-kilogram (64-pound) test weight is applied to a single open drawer. The 64-pound test weight is intended to represent the weight of a 5-year-and-11-month-old child, adjusted upward to reflect trends of increasing body mass. The test weight is applied to the top face of a drawer, with the drawer opened to two-thirds of its full extension length. The second test requires the unit not to tip over when all of the extension elements are open and the unit is empty. Each drawer or extendible element is open to two-thirds of its extension length, and doors are open perpendicular to the furniture. Units do not pass the stability requirements if they cannot support the test weight, if they tip over, or if they are only prevented from tipping by an extendible element.

3. Tip Restraint Requirements

The standard does not require, but does recommend, that tip restraints be included with units, along with attachment instructions.

4. Labeling Requirements

The standard requires a warning label and provides example text that addresses the tip-over hazard. The standard also requires a warning tag with specific text and formatting. The label and tag include statements informing consumers about the hazard, warning of tip overs and resulting injuries, and indicating how to avoid the hazard. These requirements do not address the use of televisions. The standard includes label permanency requirements and mandates that the warning label be placed "inside of a top drawer within clear view when the drawer is empty and partially opened, or on the inside face of a drawer" for chests of drawers and wardrobes.

5. Assessment of Adequacy

The Commission concludes that the stability requirements in AS/NZS 4935 are not adequate to address the CSU tip-over hazard because they do not account for factors that are commonly involved in CSU tip-over incidents and decrease the stability of CSUs. Specifically, AS/NZS 4935 requires drawer extension to only two-thirds of extension length for both stability tests. This partial extension does not represent real-world use because children are able to open drawers fully, incidents involve fully open drawers, and opening a drawer further decreases the stability of a CSU. In addition, the standard does not account for filled drawers, which are expected during real-world use, are common in tip-over incidents, and contribute to instability when multiple drawers are open. The standard also does not account for carpeted floors, which are common in incidents and contribute to instability. Although AS/NZS 4935 uses a heavier test weight than ASTM F2057-19, it is inadequate because neither stability test accounts for the moments children can exert on CSUs during interactions, such as climbing. Considering additional moments, the 64 pounds of weight on the drawer face is approximately equivalent to a

40-pound child climbing the extended drawer. A 40-pound weight corresponds to a 75th percentile 3-year-old child, 50th percentile 4-year-old child, and 25th percentile 5-year-old child.[42]

C. ISO 7171 (2019)

The International Organization for Standardization (ISO) developed the voluntary standard ISO 7171 through the Technical Committee ISO/TC 136, *Furniture* and published the first version in May 1988. The current version was published in February 2019.

1. Scope

ISO 7171 (2019) describes methods for determining the stability of freestanding storage furniture, including bookcases, wardrobes, and cabinets, but the standard does not define these terms.

2. Stability Requirements

ISO 7171 (2019) includes three stability tests, all of which occur on a level test surface. The first uses a weight/load on an open drawer. The second involves all drawers being filled and a load/weight placed on a single open drawer. In the loaded test, one drawer is opened to the outstop, and if no outstops exist the drawer is opened to two-thirds of its full extension length. The test weight is either 44 or 55 pounds, depending on the height of the unit, and is applied to the top face of the opened drawer. The fill density ranges from 6.25 pounds per cubic foot to 12.5 pounds per cubic foot, depending on the clearance height and volume of the drawer. The third test is an unloaded test with all drawers open. For this test, doors are open and drawers and extendible elements are open to the outstop or, if there are no outstops, to two-thirds of their extension length. Existing interlock systems are not bypassed for this test.

[42] Fryar, C.D., Carroll, M.D., Gu, Q., Afful, J., Ogden, C.L. (2021). Anthropometric reference data for children and adults: United States, 2015–2018. National Center for Health Statistics. Vital Health Stat 3(46).

An additional unfilled, closed drawer test is required for units greater than 1000 mm in height, where a vertical force of 350 N (77 pounds) along with a simultaneous 50 N (11 pounds) outward horizontal force is applied to the top surface of the unit.

ISO 7171 (2019) does not include criteria for determining whether a unit passed or failed the loaded stability test. However, it includes a table of "suggested" forces, depending on the height of the unit.

3. Tip Restraint Requirements

ISO 7171 (2019) does not require tip restraints to be provided with units, but it does specify a test method for them. The tip restraints are installed in both the wall and unit during the test, and a 300 N (67.4 pounds) horizontal force is applied in the direction most likely to overturn the unit.

4. Labeling Requirements

The standard does not have any requirements or test methods related to warning labels.

5. Assessment of Adequacy

The Commission concludes that the stability requirements in ISO 7171 (2019) are not adequate to address the CSU tip-over hazard because they do not account for carpeted flooring, or dynamic and horizontal forces generated by children's interactions with the CSU, such as climbing or pulling on the top drawer. In addition, although ISO 7171 (2019) includes a stability test with filled drawers, the multiple open drawer test does not include filled drawers, and the simultaneous conditions of multiple open and filled drawers during a child interaction are not tested. Finally, test weights are provided only as recommendations, and there are no criteria for determining whether a unit passes.

D. EN 14749: 2016

EN 14749: 2016 is a European Standard that was prepared by Technical Committee CEN/TC 207 "Furniture." This standard was approved by the European Committee for

Standardization (CEN) on November 21, 2015, and it supersedes EN 14749:2005, which was approved on July 8, 2005, as the original version. EN 14749:2016 is a mandatory standard and applies to all CEN members.

1. Scope

EN 14749: 2016 describes methods for determining the stability of domestic and non-domestic furniture with a height ≥ 600 mm (23.6 inches) and a potential energy, based on mass and height, exceeding 60 N-m (44.25 pound-feet). Kitchen worktops and television furniture are the only furniture types defined. The test methods in this standard are taken from EN 16122: 2012, *Domestic and non-domestic storage furniture-test methods for the determination of strength, durability and stability*, which covers "all types of domestic and non-domestic storage furniture including domestic kitchen furniture."

2. Stability Requirements

EN 14749: 2016 includes three stability tests, which are conducted with the units freestanding. In the first loaded test, a 75 N (16.9 pounds) test weight is applied to the top of the drawer face, when pulled to the outstop or, if no outstops exist, to two-thirds of its full extension length. In the second test, doors are open and all drawers and extendible elements are open to the outstop or, if no outstops are present, to two-thirds of their extension lengths. Existing interlock systems are not bypassed for this test. The third test involves filled drawers and a load; all storage areas are filled with weight and the loaded test procedure (above) is carried out but with a test weight that is 20 percent of the mass of the unit, including the drawer fill, not exceeding 300 N (67.4 pounds). Similar to ISO 7171, an additional unfilled, closed drawer test is required for units greater than 1000 mm in height, where a vertical force of 350 N (77 pounds) along with a simultaneous 50 N (11 pounds) outward horizontal force are applied to the top surface of the unit.

The standard accounts for interlock systems, requiring one extension element to be open to its outstop, or in the absence of an outstop, two-thirds of its operational sliding length, and a 100 N (22 pounds) horizontal force to be applied to the face of all other extension elements. This is repeated multiple times on each extension element and all combinations of extension elements are tested.

3. Tip Restraint Requirements

EN 14749: 2016 does not include any requirements regarding tip restraints.

4. Labeling Requirements

EN 14749: 2016 does not include any requirements regarding warning labels.

5. Assessment of Adequacy

The Commission concludes that the stability requirements in EN 14749: 2016 are not adequate to address the CSU tip-over hazard because they do not account for carpeted flooring, or dynamic and horizontal forces generated by children's interactions with the CSU, such as climbing or pulling on the top drawer. In addition, although the standard includes a stability test with filled drawers, the multiple open drawer test does not include filled drawers, and the simultaneous conditions of multiple open and filled drawers during a child interaction are not tested. Moreover, the fill weight ranges from 6.25 pounds per cubic foot to 12.5 pounds per cubic foot, which includes fill weights lower than staff identified for drawers filled with clothing (discussed in section **VII. Technical Analysis Supporting the Rule**).

E. ANSI/BIFMA SOHO X6.5-2022

In the NPR, staff reviewed the requirements in ANSI/SOHO S6.5-2008 (R2013), *Small Office/Home Office Furniture – Tests American National Standard for Office Furnishings*. The standard does not address CSUs, but rather, applies to office furniture, such as file cabinets. However, CPSC considered the standard because it addresses interlock systems, which some CSUs include and are relevant to stability testing. On April 5, 2022, ANSI/BIFMA published a

new version of the standard, ANSI/BIFMA X6.5-2022. Although this update included several revisions, the interlock strength test requirements remained unchanged.

This standard specifies tests for "evaluating the safety, durability, and structural adequacy of storage and desk-type furniture intended for use in the small office and/or home office." ANSI/BIFMA X6.5-2022 includes testing to evaluate interlock systems. The test procedure calls for one extendable element to be fully extended while a 30-pound horizontal pull force is applied to all other fully closed extendable elements. Every combination of open/closed extendable elements[43] must be tested. The interlock system must be fully functional at the completion of this test and no extendable element may bypass the interlock system.

As discussed in section **IX. Description of and Basis for the Rule**, child strength studies show that children between 2 and 5 years old can achieve a mean pull force of 17.2 pounds. Therefore, CPSC considers a 30-pound horizontal pull force adequate to evaluate the strength of an interlock system. However, because ANSI/BIFMA X6.5-2022 does not include stability tests or requirements reflecting the real-world factors involved in CSU tip overs, the Commission finds that compliance with ANSI/BIFMA X6.5-2022 is not likely to adequately reduce the risk of injury associated with CSU tip overs.

VI. Technical Background Relevant to CSU Tip Overs

This section provides a brief overview of engineering concepts relevant to CSU tip overs and the final rule, such as center of gravity (also referred to as center of mass), moments, and fulcrums. Tab D of the NPR briefing package provides detailed background information on each of these terms, including how staff applies them to CSU tip-over analyses.

[43] Excluding doors, writing shelves, equipment surfaces, and keyboard surfaces.

A. Center of Gravity and Center of Mass

Center of Gravity (CG) or Center of Mass (CM)[44] is a single point in an object, about which its weight (or mass) is located. In terms of freestanding CSUs, if the CSU's CG is located behind the pivot point of the CSU (typically the front feet), the CSU will not tip over due to its own weight. Alternatively, if the CSU's CG is in front of the pivot point, the CSU is unstable and will tip over. The CG (and CM) of an object is dependent on the CG and the weight of each component that makes up the object. For example, CSU drawers typically have a front that is thicker and larger than the back, which causes the drawer's CG to be closer to the front. The CSU's CG is defined by the position and weight of the CSU cabinet, without doors or extendable elements (*i.e.*, drawers or pull-out shelves), combined with the position and weight of each door and extendable element. A CSU's CG is equal to the sum of the products of the CG position and the weight of each component, divided by the total weight.

The CG of a CSU will change as a result of the position of the doors and extendable elements (open or closed). Opening doors and extendable elements shifts the CG towards the front of the CSU. The closer the CG is to the front legs, the easier it is to tip forward if a force is applied to the door or extendable element. Therefore, CSUs will tip more easily as more doors and extendable elements are opened. The CG of a CSU will also change depending on factors such as the position and amount of clothing in each extendable element. Closed extendable elements filled with clothing tend to stabilize a CSU, but as each filled extendable element is pulled out, the CSU's CG will shift further towards the front.

B. Moment and Fulcrum

Moment, or torque, are engineering terms to describe rotational force acting about a pivot point, or fulcrum. The moment is created by a force or forces acting at a distance, or moment

[44] For CSU-sized objects, CG and CM are effectively the same. Therefore, CG and CM are used interchangeably in this preamble.

arm, away from a fulcrum. One simple example is the moment or torque created by a wrench turning a nut. The moment or torque about the nut is due to the perpendicular force on the end of the wrench applied at a distance (moment arm) from the fulcrum (nut). Likewise, a downward force on an open CSU door or extendable element creates a moment about the fulcrum (front leg) of the CSU. A CSU will tip over about the fulcrum due to a force (*e.g.*, weight of a child positioned over the front of a drawer) and the moment arm (*e.g.,* extended drawer).

Downward force or weight applied to the door or extendable element tends to tip the CSU forward around the fulcrum at the base of the unit, while the weight of the CSU opposes this rotation. The CSU's weight can be modeled as concentrated at a single point: the CSU's CG. The CSU's stability moment is created by its weight, multiplied by the horizontal distance of its CG from the fulcrum. A child can produce a moment opposing the weight of the CSU, by pushing down or sitting in an open drawer. This moment is created by the vertical force of the child, multiplied by the horizontal distance to the fulcrum. The CSU becomes unbalanced and tips over when the moments applied at the front of the CSU exceed the CSU's stability moment.

Horizontal forces applied to pull on a door or extendable element also tend to tip the CSU forward around the front leg (pivot point or fulcrum) at the base of the unit, while the weight of the CSU opposes this rotation. In this case, the moment produced by the child is the horizontal pull force transmitted to the CSU (for example, through a drawer stop), multiplied by the vertical distance to the fulcrum. The CSU becomes unbalanced and tips over when the moments applied at the front of the CSU exceed the CSU's stability moment.

When a child climbs a CSU, both horizontal forces and vertical forces acting at the hands and feet contribute to CSU tip over. Figure 1 shows a typical combination of forces acting on a CSU while a child is climbing, and it describes how those forces contribute to a tip-over moment. As Figure 1 shows, a child climbing on drawers opened distance A1 from the fulcrum, with feet at height B1 from the ground and hands at height B2 above the feet, will act on the

CSU with horizontal forces F_H and vertical forces F_V. The CSU's weight at a distance A2 from the CSU's front edge touching the ground creates a stabilizing moment. The CSU will tip if Moment 1 is greater than Moment 2.

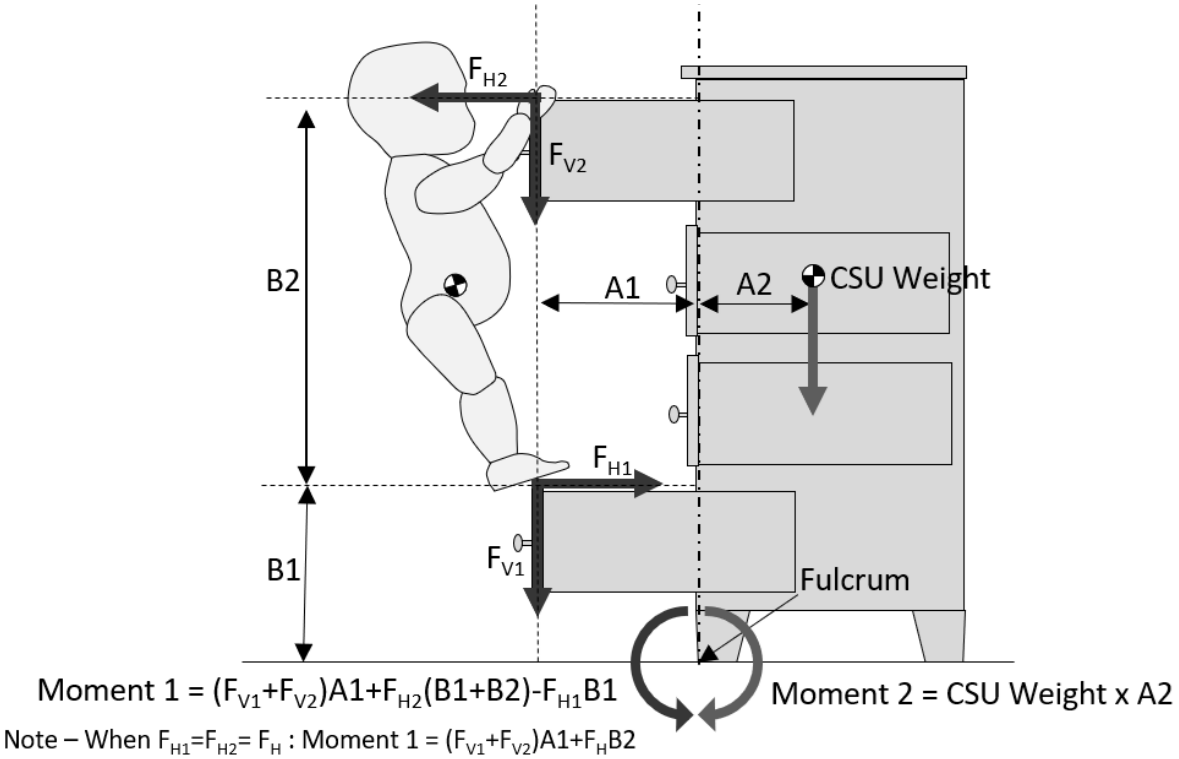

Figure 1: An example of opposing moments acting on a CSU.

VII. Technical Analysis Supporting the Rule

In addition to reviewing incident data, CPSC staff conducted testing and analyses, analyzed tip-over incidents, and commissioned several contractor studies to further examine factors relevant to CSU tip overs. This section provides an overview of that testing and analysis; for additional details see the NPR and NPR briefing package.

A. Multiple Open and Filled Extendable Elements

Staff's technical analysis, as confirmed by testing, indicates that multiple open extendable elements[45] decrease the stability of a CSU, and filled extendable elements further

[45] Although staff's testing focused on CSUs with drawers, rather than pull-out shelves, the same effects on stability would apply to pull-out shelves because both drawers and pull-out shelves are extendable elements that hold contents. See section **VII. Technical Analysis Supporting the Rule** for more details regarding pull-out shelves and why they can hold the same content capacity as drawers.

decrease stability when more than half of the extendable elements, by volume, are open, but increase stability when more than half of the extendable elements, by volume, are closed. Thus, although multiple open extendable elements, alone, can make a unit less stable, whether the extendable elements are full when open is also a relevant consideration. When filled extendable elements are closed, the clothing weight contributes to the stability of the CSU, because the clothing weight is behind the front legs (fulcrum). However, open extendable elements contribute to the CSU being less stable because the clothing weight is shifted forward in front of the front legs (fulcrum).

To assess the effect of open extendable elements and filled extendable elements on CSU stability, staff first assessed the appropriate fill weight to use for testing, and then conducted testing to evaluate the effect of various combinations of open/closed and filled/empty drawers using a convenience sample of CSUs. This section provides an overview of the results; further details about the effect of open and filled drawers on CSU stability is available in Tabs D, L, and O of the NPR briefing package.

1. Fill Weight

In working on ASTM F2057, the ASTM F15.42 subcommittee has considered a "loaded" (filled) drawer requirement and test method using an assumed clothing weight of 8.5 pounds per cubic foot. Kids in Danger and Shane's Foundation found a similar density (average of 8.9 pounds per cubic foot) when they filled CSU drawers with boys' t-shirts in a 2016 study on furniture stability.[46]

Staff conducted testing to assess whether 8.5 pounds per cubic foot reasonably represents the weight of clothing in a drawer. As part of this assessment, staff considered folded and unfolded children's clothing with a total weight equal to 8.5 pounds per cubic foot of functional

[46] Kids in Danger and Shane's Foundation (2016). Dresser Testing Protocol and Data. Data set provided to CPSC staff by Kids in Danger, January 29, 2021.

drawer volume, and the maximum amount of folded and unfolded clothing that could be put into a drawer that would still allow the drawer to open and close. Staff used a range of drawer sizes to assess small, medium, and large drawers. For all three drawer sizes, staff was able to fit 8.5 pounds per cubic foot of folded and unfolded clothing in the drawers, which fully filled the drawers, but still allowed the drawers to close. The maximum unfolded clothing fill weight was 6.52, 14.64, and 21.20 pounds for the three drawer sizes, respectively; and the maximum folded clothing fill weight was 7.72, 16.08, and 22.88 pounds for the three drawer sizes, respectively.

Staff also compared the calculated clothing weight (*i.e.*, using 8.5 pounds per cubic foot), maximum unfolded drawer fill weight, and maximum folded drawer fill weight for each drawer. The difference between the maximum unfolded clothing fill weight and the calculated clothing weight ranged from 0.08 pounds to 0.87 pounds. The difference between the maximum folded clothing fill weight and the calculated clothing weight ranged from 1.28 to 2.55 pounds. The maximum unfolded clothing fill density ranged from 8.56 to 8.87 pounds per cubic foot, depending on the drawer. The maximum folded clothing fill density ranged from 9.40 to 10.16 pounds per cubic foot, depending on the drawer. Thus, there does not appear to be a large difference in clothing fill density based on drawer size. For additional information about this testing, see Tab L of the NPR briefing package.

Based on this testing, staff found that 8.5 pounds per cubic foot of clothing will fill a drawer; however, this amount of clothing is less than the absolute maximum amount of clothing that can be put into a drawer, especially if the clothing is folded. The maximum amount of unfolded clothing that could be put into the tested drawers was slightly higher than 8.5 pounds per cubic foot. Although staff achieved a clothing density as high as 10.16 pounds per cubic foot with folded clothing, staff considers it unlikely that consumers would fill a drawer to this level because it requires careful folding, and it is difficult to remove and replace individual pieces of

clothing. Therefore, staff concluded that 8.5 pounds per cubic foot of functional drawer volume is a reasonable approximation of the weight of clothing in a fully filled drawer.

The NPR raised the possibility that fill weight for pull-out shelves may be lower than for drawers (*e.g.*, 4.25 pounds per cubic foot or half that of drawers) if consumers are less likely to fill the open area of a pull-out shelf because it is less contained than a drawer. Accordingly, staff conducted further assessment after the NPR and found that pull-out shelves can hold the same volume of clothing as drawers and still remain fully functional and sufficiently contain the clothing content during moving of the shelf. Consistent with staff's conclusion, ASTM is considering requirements that use the same fill weight as in the final rule for both drawers and pull-out shelves.

2. Phase I and II Testing

After determining the appropriate fill weight to use for testing, staff conducted two phases of testing (Phase I and Phase II) to assess the weight at which a CSU became unstable and tipped over with various configurations of drawers open/closed and filled/empty.[47] Phase I of the study focused on CSUs with a single column of drawers and drawers of the same size. Results showed that CSUs tipped over under the same weights with the same configuration of open/closed, regardless of which drawers were opened and on which drawer the test weight was applied.

Phase II of the study included more complex CSUs with multiple columns of drawers and more combinations of open/closed and filled/empty drawers. Staff also supplemented this data with results from other CSU testing staff had performed. In general, the results indicated that CSUs were less stable as more drawers were opened, and that filled drawers have a variable

[47] Staff used the stability test methods in ASTM F2057-19, with some alterations to collect information about variables ASTM does not address (*e.g.*, open/closed drawers, filled/empty drawers, the weight that caused tip over). Because of the limited number of units tested, this study provides useful information, but the results are limited to the tested units.

effect on stability. A filled closed drawer contributes to stability, while a filled open drawer decreases stability. Depending on the percent of drawers that are open and filled, having multiple drawers open decreased the stability of the CSU.

B. Forces and Moments During Child Interactions with CSUs[48]

As indicated, some of the common themes that staff identified in CSU tip-over incident data involved children interacting with CSUs, including climbing on them and opening drawers. To determine the forces and other relevant factors that exist during these expected interactions between children and CSUs, CPSC contracted with UMTRI to conduct research. The researchers at UMTRI, in collaboration with CPSC staff, designed a study to collect information about children's measurements and proportions, interest in climbing and climbing behaviors, and the forces and moments children can generate during various interactions with a CSU. The study consisted of an interactive portion and a focus group portion. Forty children, age 20 months to 65 months old, participated in the study. This section provides an overview and key results of this study. For additional details about the study, including the test apparatus, data acquisition, additional behaviors assessed, and analyses, see the NPR and UMTRI's full report in Tab R of the NPR briefing package.

1. Overview of Interaction Portion of UMTRI Study

The interaction portion of the study included children interacting with a CSU test apparatus with instrumented handles and a simulated drawer and tabletop (to simulate the top of a CSU or other tabletop or furniture unit). Researchers measured the forces of the children acting on the test apparatus and calculated moments generated by the children, based on the location of

[48] Further information about the study described in this section, and forces and moments generated by children's interactions with CSUs, is available in Tabs C, D, and R of the NPR briefing package.

the CSU's front leg tip point (fulcrum). The researchers based the fulcrum's location on a dataset of CSU drawer extensions and heights provided by CPSC staff.[49]

The interaction portion of the study looked at forces associated with several climbing-related interactions of interest, which staff and researchers selected based on CSU tip-over incidents, videos of children interacting with CSUs and similar furniture items, and plausible interactions based on children's developmental abilities. Staff focused on the ascent/climbing interaction for this rulemaking because climbing incidents were among the most common interactions in tip-over incidents.

UMTRI researchers created the test apparatus shown in Figure 2, which used a padded force plate to measure interactions with the floor and included a column to which the various instrumented test fixtures were attached. Tests were conducted with a pair of handlebars (simulating drawer handles or fronts), a simulated drawer, and a simulated top. The test fixture was designed from information CPSC provided based on drawer extensions, heights, and climbing surfaces of CSUs. UMTRI researchers configured the test fixtures based on each child's anthropometric measurements, setting the upper and lower bars to multiple heights that were within plausible heights for CSU drawers based on CPSC staff's research. Tabs C and R of the NPR briefing package contain more information about the test fixture configurations. The bars, drawer, and tabletop, as well as the floor in front of the test fixture, had force measurement instrumentation that recorded forces over time in the horizontal (fore-aft, x) and vertical (z) directions.

[49] CPSC staff provided UMTRI researchers with a dataset of drawer extensions and drawer heights from the ground from a sample of approximately 180 CSUs. The researchers selected the 90th percentile drawer extension (12 inches) and drawer height (16 inches) as the basis for placing the moment fulcrum in most of their analysis.

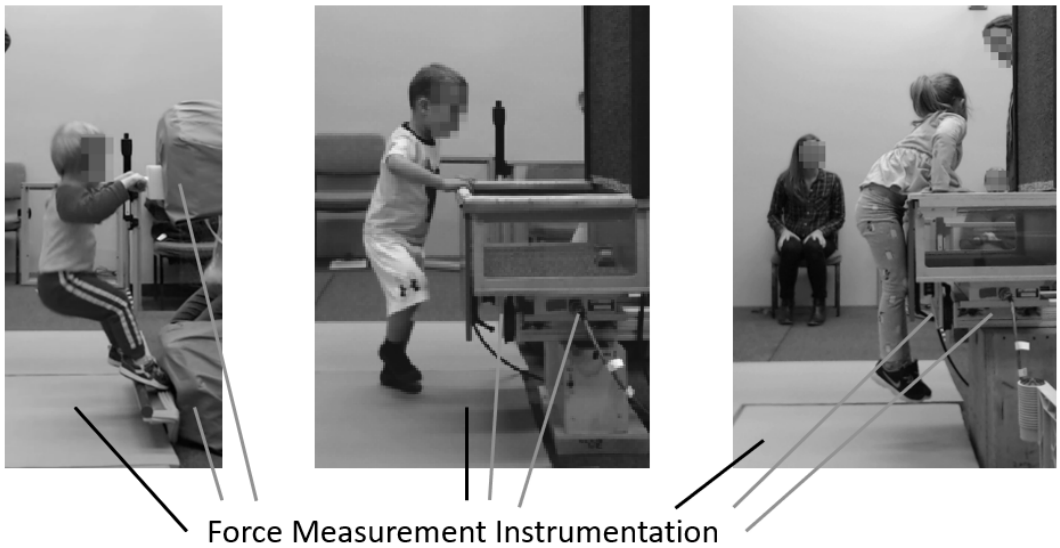

Figure 2: The test setup and location of instruments used to measure force during handle trials (left), box/drawer trials (center), and table trials (right).

Researchers used a set of scripted interactions, based on CPSC's information about incidents, in which the child's position or dynamic interactions were likely to cause a CSU to tip over. The interactions UMTRI researchers evaluated included:

- *Ascend:* climb up onto the test fixture;
- *Bounce:* bounce vigorously without leaving the bar;
- *Lean back:* lean back as far as possible while keeping both hands and feet on the bars;
- *Yank:* from the lean back position, pull on the bar as hard as possible;
- *1 hand & 1 foot:* take one hand and foot (from the same side of the body) off the bars and then lean as far away from the bars as possible;
- *Hop up:* hold the upper bar and try to jump from the floor to a position where the arms are straight and the hips are in front of the upper bar, an action similar to hoisting oneself out of a swimming pool;
- *Hang:* hold onto the upper bar, lift feet off the floor by bending knees, hang still for a few seconds, and then straighten legs to return to the floor; and
- *Descend:* climb down from the test fixture.

The ascend interaction best models the climbing behavior commonly seen in incidents, and is analogous to a child's initial step to climb up on to the CSU, which is an integral climbing interaction. The other, more extreme interactions, such as bounce, lean, and yank, were identified as plausible interactions, based on child behavior; but these interactions were not directly observed in the incident data. Researchers isolated interactions using video and used this to identify peak forces and moments and to estimate the location of the child's CM, based on anthropometric information. The UMTRI researchers estimated the location of the child's CM by examining the side-view images from the times of maximum moment, as shown in Figure 3. The children in the study extended their CM an average of about 6 inches from the handle/foothold while ascending.

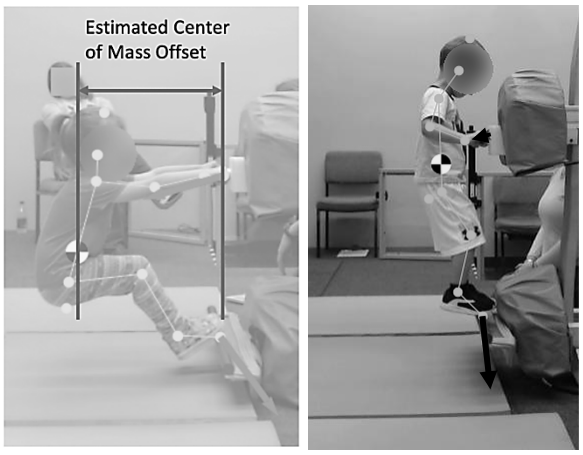

Figure 3. Example of digitized frame with estimated CM location and offset from upper handle. The lean behavior is shown on the left, and the ascend behavior is shown on the right. Forces at the hands and feet are shown with scaled arrows.

Figure 4 shows side view images of examples of children interacting with the handle fixture. The frames were taken at the time of peak tip-over moment. Forces exerted by the child at the hands and feet are illustrated using scaled vectors (longer lines indicate greater force

magnitude; arrow direction indicates force direction). Digitized landmarks[50] and estimated CM locations are shown.

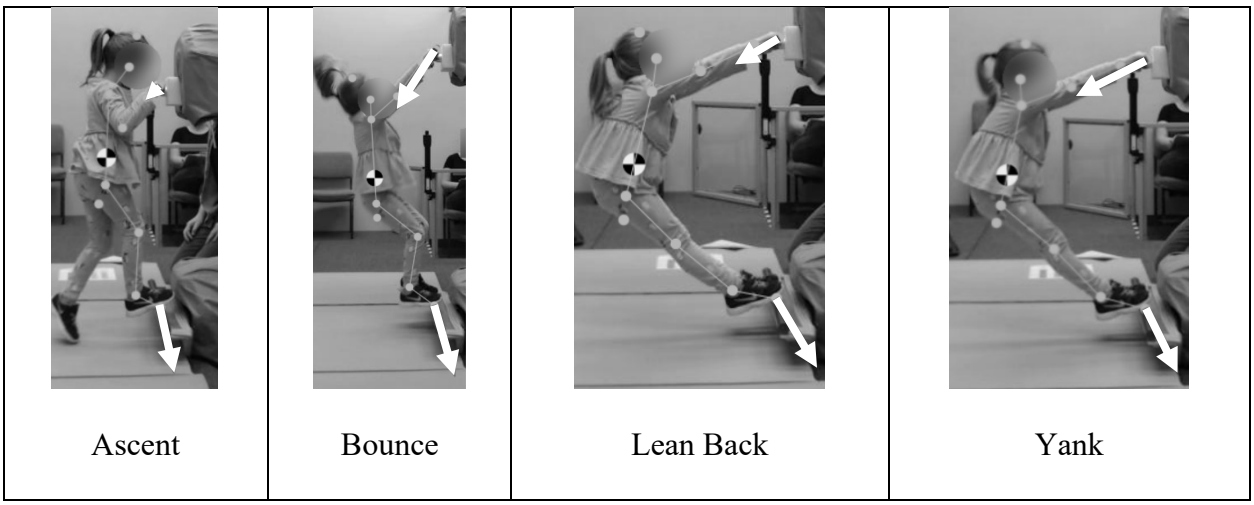

Figure 4: Depicts examples of interactions. Arrows illustrate the directions and relative magnitudes of forces at the hands and feet.

UMTRI researchers modeled a child interacting with a CSU with opened drawers, by measuring forces at instrumented bars representing a drawer front or handle. Figure 5 is the free-body diagram of the child climbing the CSU. The horizontal and vertical forces at the hands and feet correspond to the positive direction of the measured forces. The CSU drawers were modeled using the top handle and bottom handle height, and the drawer extension was modeled from 0 inches to 12 inches.[51] The UMTRI researchers calculated the moment about the CSU's front foot or fulcrum, using the measured forces, vertical location of the top and bottom handles, and the defined drawer extension length (Fulcrum X).

[50] Landmarks are a standardized point on the body that can be readily identified in video and still images and be used to estimate body position, including center of mass. Researchers used the landmarks to make a biomechanical stick figure, which can be used to make calculations.

[51] Here, 0 inches corresponds with a closed drawer when the fulcrum lines up with the drawers. Additionally, 12 inches represents the 90th percentile drawer extension length in a dataset of approximately 180 CSUs.

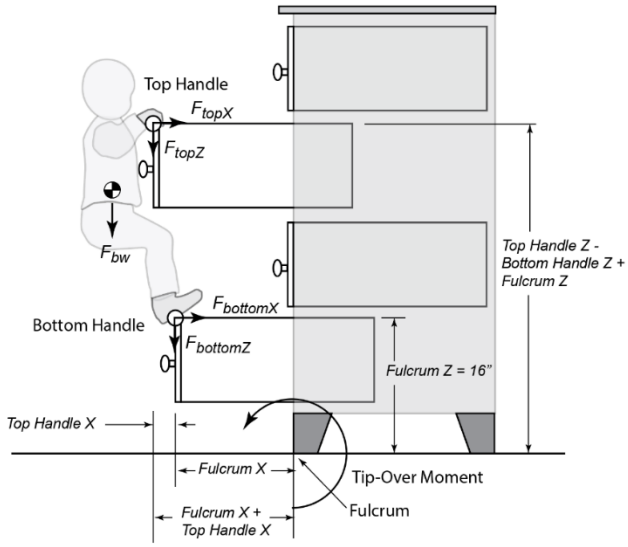

Figure 5. Free-body diagram of a child climbing a CSU.

Figure 5 shows that the child's body weight will generally be distributed between the two bars, but that the child's CM location will also typically be outboard of the bars (farther from the fulcrum than the bars). The quasi-static climbing moment is approximately equal to the location of the child's CM (the horizontal distance of the CM to the fulcrum), multiplied by the child's weight. The moment created by dynamic forces generated by the child during the activities in the UMTRI study, such as during ascend, exceed the moment created by body weight alone, as a result of the greater magnitude horizontal and vertical forces.

UMTRI researchers analyzed the force data as generating a moment around a tip-over fulcrum. The UMTRI researchers calculated the maximum moment about a virtual fulcrum, based on the measured force data for each test and the location of the force. Figure 6 shows the test setup and the forces measured. The test setup mimics a CSU with the drawers closed and the *Fulcrum X = 0.* UMTRI researchers defined the horizontal *Fulcrum X* distance of 1-foot (based on the 90th percentile drawer extension) to simulate a 1-foot drawer extension. The bottom handle vertical *Fulcrum Z* was set to 16 inches (based on the 90th percentile drawer height from

the floor), and the *Top Handle Z* varied, depending on the size of the child.[52] Researchers calculated the moment that would be generated for a child interacting on a 1-foot extended CSU drawer, where Fulcrum X = 1 foot.

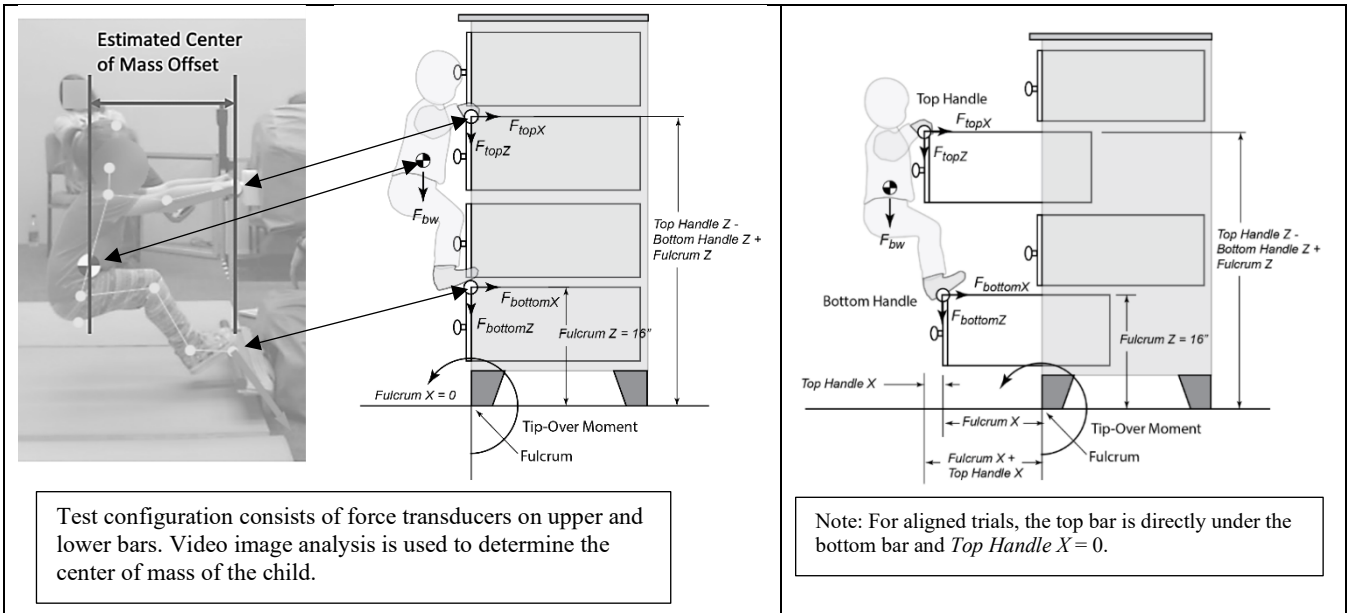

Test configuration: force data collected on bars, $F_{top\ X}$, $F_{top\ Z}$, $F_{bottom\ X}$ *and* $F_{bottom\ Z}$. Image analysis determines the Estimated CM Offset.	The child's moment is calculated based on input values for *Fulcrum X* "virtual fulcrum" multiplied by the measured vertical force data. Horizontal force data multiplied by height Z also contributes to the moment.

Figure 6. These diagrams illustrate how the test configuration was used to determine the child's moment acting on the CSU.

Figure 20 in Tab D of the NPR briefing package (also Figure 44 in Tab R) shows the calculated maximum moment for each interaction of interest versus the child's body weight, and shows that the maximum moment tends to increase with body weight. UMTRI researchers normalized the moment by dividing the calculated moment by the child's body weight to enable the effects of the behaviors to be examined independent of body weight, as shown in Figure 21 in Tab D of the NPR briefing package (also Figure 46 in Tab R). As the figure illustrates, the greatest moments were generated in the Yank interaction, followed in descending order by Lean,

[52] The top handle varied from 7.4 to 47.3 inches above the bottom handle.

Bounce, 1 Hand, and Ascend. As the weight of the child increased, so did the maximum moment. For all of the interactions, the maximum moment exceeded the weight of the child.

The preceding analysis was based on a 12-inch (one foot) horizontal distance between the location of force exertion and the fulcrum. The following analysis shows the effects of varying the *Fulcrum X* value, which is equivalent to a CSU's drawer extension from the fulcrum.

The net moment can be calculated using a *Fulcrum X* = 0 position, as shown in Figure 7, to bound the effects of drawer extension. Placing the fulcrum directly under the hands and feet in the aligned conditions eliminates the effects of vertical forces on moment, while amplifying the relative effects of horizontal forces.

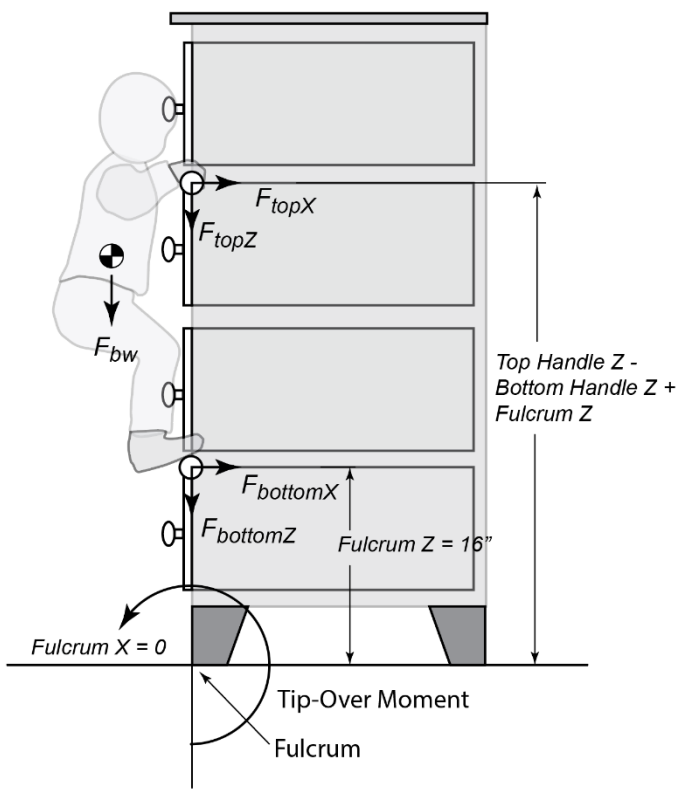

Figure 7. Depicts a schematic of effects of reducing *Fulcrum X* to zero (compare with Figure 5, which depicts a non-zero *Fulcrum X* distance).

UMTRI researchers analyzed the effects of the *Fulcrum X* (which corresponds to the drawer extension[53]) on the tip-over moment for the targeted behaviors. Since the moment about the fulcrum was calculated based on measured force data and input values for *Fulcrum X* distance, the researchers were able to analyze the effects of the fulcrum position by varying the *Fulcrum X* value from 0 to 12 inches. UMTRI researchers used this virtual *Fulcrum X* value to calculate the corresponding maximum moment.

Figure 23 in Tab D of the NPR briefing package (also Figure 51 in Tab R) shows the maximum moments versus the *Fulcrum X* values of 0 and 12 inches across behaviors for aligned conditions. For example, the calculated moment for Ascend at X=0 is about 17.5 pound-feet. The moment when X=0 is due entirely to horizontal forces. These horizontal forces exerted by the children on the top and bottom handles of the test apparatus are necessary to balance their outboard CM. UMTRI researchers concluded that the children's CM due to their postures have strong effects on the horizontal forces exerted and the calculated moments. Consequently, the location of the child's CM during the behavior is an important variable.

As discussed, the UMTRI researchers normalized the moment by dividing the calculated moment of each trial by the child's body weight to enable the effects of the behaviors to be examined independent of body weight. The graphs of Figure 23 in Tab D of the NPR briefing package show how the moments and the normalized moments increase with the fulcrum distance (which corresponds to the drawer extension). For the normalized moments shown in the bottom graph, this can be interpreted as the effective CM location outboard of the front foot of the CSU (fulcrum), in feet. For example, a child climbing on a drawer extended 12 inches (1 foot) from the front foot fulcrum will have an effective CM that is about 19 inches (1.6 feet) from the

[53] Drawer extension data provided by CPSC staff to UMTRI researchers was measured from the extended drawer to the front of the CSU, and did not account for how the fulcrum position will vary with foot geometry and position. UMTRI researchers assumed that the fulcrum was aligned with the front of the CSU to simplify their analysis.

fulcrum. At *Fulcrum X* = 0, the contribution of vertical forces to the moment are eliminated, and only the horizontal forces exerted at the hands and feet contribute to the moment. The horizontal forces exerted by the child on the top and bottom handles are necessary to balance his/her outboard CM. The effective moment where the fulcrum = 0 is about 6 inches (0.5 feet) for the Ascend behavior, and it is primarily due to the outboard CM position of the child about 6 inches (0.5 feet) from the fulcrum.[54]

As the drawer is pulled out farther from the fulcrum, vertical forces have a greater impact on the total moment contribution. UMTRI researchers reported that at the time of peak moment during ascent, the average (median) vertical force, divided by the child's body weight, was close to 1 (staff estimates this value is approximately 1.08 for aligned handle trials).[55] This suggests child body weight is the most significant vertical force, although dynamic forces also contribute. Based on the Normalized Moment for Ascend shown in the bottom graph of Figure 23 in Tab D of the NPR briefing package, CPSC staff estimated the Ascend line with the following equation 1:

Equation 1. $Normalized\ Moment\ for\ Ascend = 1.08\ \times\ [Fulcrum\ X(\text{ft})] + 0.52\ \text{ft}.$

Equation 1 can be multiplied by a child's weight to estimate the moment *M* generated by the child ascending, as shown in Equation 2:

Equation 2. $M = \{1.08\ \times [Fulcrum\ X(\text{ft})] + 0.52\ \text{ft}\}\ \times\ child\ body\ weight\ (\text{lb})$

For example: for a 50-pound child *ascending* the CSU with a 1-foot drawer extension, the moment at the fulcrum is:

$M = \{1.08 \times [1\ \text{ft}] + 0.52\ \text{ft}\} \times 50\ \text{lb} = 54\ \text{lb-ft} + 26\ \text{lb-ft}$

$M = 80\ \text{lb-ft}$

[54] UMTRI researchers reported that the average CM offset was 6.1 inches (0.51 feet) during ascent at the time the maximum moment was measured.

[55] Refer to Figure 48 in the UMTRI report (Tab R of the NPR briefing package).

The 50-pound child in the example above produces a total moment of 80 pound-feet about the fulcrum. The contribution to the total moment from vertical forces, such as body weight and vertical dynamic forces, is 54 pound-feet. The contribution to the total moment from horizontal forces, such as the quasi-static horizonal force used to balance the child's CM in front of the extended drawer and dynamic forces, is 26 pound-feet.

Similar climbing behaviors for drawer and tabletop trials (*e.g.*, climbing into the drawer or climbing onto the tabletop) generated lower moments than ascent. Therefore, the equation for Ascend is expected to cover those behaviors as well.

To summarize the findings from the UMTRI study, researchers found that the moments caused by children climbing furniture exceed the effects of body weight alone. CPSC staff used the findings to develop an equation that could be used to calculate the moment generated by children ascending a CSU, based on the child's body weight and the drawer extension from the CSU fulcrum, shown in Equation 2. This equation, combined with the weight for the children involved in CSU tip-over incidents, is the basis for the moment requirements in this rule.

2. Focus Group Portion of UMTRI Study

In addition to examining the forces children generate when interacting with a CSU, in the UMTRI study, the researchers also asked participants and their caregivers questions about participants' typical climbing behaviors. Caregivers described various tactics the children used for climbing, such as "jumped up," "hands and feet," "ladder style," and "grab and pull up," but the most common strategy was stepping into or onto the lowest drawer. Caregivers also mentioned children using chairs, stools, and other objects to facilitate climbing, including pulling out dresser drawers.

C. Flooring[56]

To examine the effect of flooring on the stability of CSUs, staff reviewed existing information and conducted testing. As background, staff considered a 2016 study on CSU stability, conducted by Kids in Danger and Shane's Foundation.[57] In that study, researchers tested the stability of 19 CSUs, using the stability tests in ASTM F2057-19 on both a hard, flat surface, and on carpeting. The results showed that some CSUs that passed on the hard surface, tipped over when tested on carpet.

To examine further the effect of carpeting on the stability of CSUs, staff tested 13 CSUs, with a variety of designs and stability, on a carpeted test surface. For this testing, staff used a section of wall-to-wall, tufted polyester carpeting with polypropylene backing from a major home-supply retailer and typical of wall-to-wall carpeting, based on staff's review of carpeting on the market. Staff installed and secured the carpet, with a carpet pad, on a plywood platform, and conditioned the CSU and carpeting by weighting the unit for 15 minutes. Staff then tested the unit using the same methods and CSU configurations (*i.e.*, number and position of open and filled drawers) as used with these units in the Multiple Open and Filled Drawers testing conducted on the hard surface (Tab O of the NPR briefing package).

Using 1,221 pairings of tip weights (*i.e.*, tip weight on the flat surface and on the carpet, with various configurations of multiple open and filled drawers), staff calculated the difference in tip weight for each CSU when on the hard surface, compared to the carpeted surface (tip weight difference). A CSU had a positive tip weight difference if the tip weight was higher on the hard surface than on the carpet, indicating that CSUs are less stable on carpet. The testing showed the CSUs tended to be more stable on the hard surface than they were on carpet. Of the

[56] Details regarding staff's assessment of the effect of flooring on CSU stability is available in Tabs D and P of the NPR briefing package.
[57] *Furniture Stability: A Review of Data and Testing Results* (Kids in Danger and Shane's Foundation, August 2016).

1,221 tip-over weight differences, the tip weight difference was positive for 1,149 (94 percent) of them; negative for 33 (3 percent) of them; and zero (*i.e.*, the tip-over weights were equal) for 39 (3 percent). For all 1,221 combinations, the mean tip weight difference was 7.6 pounds, but for individual units, the mean tip weight difference ranged from 4.1 to 16.0 pounds. For all 1,221 combinations, the median tip weight difference was 7 pounds, but for individual units, the median ranged from 2 to 16 pounds. The standard deviation for the entire 1,221 data set was 5.1 pounds, but was smaller for individual units, ranging from 1.8 to 4.7 pounds, indicating that most of the variability in tip weight differences was between units, as opposed to within units, which suggests that some units are affected more than others by carpeting.

Staff also analyzed the relationship between tip weight difference on carpeted and hard flooring surfaces with various configurations of open/closed and filled/unfilled drawers. In general, even with variations in configurations, CSUs tended to tip over with less weight when on carpet than when on the hard, flat surface. CSUs on carpet had a mean tip weight of 7.6 pounds less and a median tip weight of 7 pounds less than permutations where the CSU was on a hard, flat surface.

As these test results indicate, CSUs are less stable on carpet than on a hard surface. The compressible carpet surface allows slight movement of the CSU, with commensurate tilt in the CG location by a couple of degrees before tipping over. When the CSU begins to tilt forward slightly, the CG moves closer to the fulcrum, resulting in a lower weight required for tip over, compared to a hard surface.

Staff used the results from this study to determine a test method that approximated the effect of carpet on CSU stability by tilting the unit forward (Tab D of the NPR briefing package). Using the CSUs that were involved in CSU tip-over incidents (Tab M of the NPR briefing package), staff compared nine tip weights on carpet with tip weights for the same units in the

same test configuration when tilted at 0, 1, 2, and 3 degrees in the forward direction on an otherwise hard, level, and flat surface.

The tip weight of CSUs on carpet corresponded with tilting the CSUs 0.8 to 3 degrees forward, depending on the CSU; the mean tilt angle that corresponded to the CSU tip weights on carpet was 1.48 degrees. This suggests that a forward tilt of 0.8 to 3 degrees replicated the test results on carpet. Staff also conducted a mechanical analysis of the carpet and pad used in the test assembly and found a similar forward tilt of 1.5 to 2.0 degrees would replicate the effects of carpet for one CSU.

D. Incident Recreation and Modeling[58]

CPSC staff analyzed incidents and tested products that were involved in CSU tip-over incidents to better understand the real-world factors that contribute to tip overs. Staff analyzed seven CSU models, associated with 13 tip-over incidents. The CSUs ranged in height from 27 to 50 inches and weighed between 45 and 195 pounds. One of these CSU models did not comply with sections 7.1 or 7.2 in ASTM F2057-19; three models complied with the requirements in section 7.1, but not section 7.2; two models complied with both sections 7.1 and 7.2; and one was borderline.[59] Through testing and analysis, staff recreated the incident scenarios described in the investigations and determined the weight that caused the unit to tip over in a variety of use scenarios, such as a child climbing or pulling on the dresser, multiple open drawers, filled and unfilled drawers, and the flooring under the CSU.

Based on this analysis and testing, staff identified several factors that contributed to the tip-over incidents. One factor was whether multiple drawers were open simultaneously. Opening multiple drawers decreased the stability of the CSU. A related factor was whether the drawers of

[58] Details about staff's incident recreation and modeling are in Tabs D and M of the NPR briefing package.
[59] Staff tested the borderline model two separate times. In one case, the tip weight just exceeded the ASTM F2057-19 minimum acceptable test fixture weight. In another case, the model tipped over just below the minimum allowed test fixture weight.

the CSU were filled, and to what extent. Staff's testing indicated that the weight of filled drawers increases the stability of a CSU when more drawers are closed, and reduces overall stability when more drawers are open. Generally, when more than half of filled drawers were open (by volume), the CSU was less stable.

Another factor was the child's interaction with the CSU at the time of the incident. In some incidents, the child was likely exerting both a horizontal and vertical force on the CSU. Staff found that, for some CSUs, either a vertical or horizontal force, alone, could cause the CSU to tip over, but the presence of both forces significantly increased the tip-over moment acting on the CSU. These forces, in combination with the other factors staff identified, contributed further to the instability of CSUs. Some of the incident recreations indicated that the force on the edge of an open drawer associated with tipping the CSU was greater than the static weight of the child standing on the edge of an open drawer of the CSU. The equivalent force consists of the child's weight, the dynamic force on the edge of the drawer due to climbing, and the effects of the child's CG extending beyond the edge of the drawer. Some of the incident recreations indicated that a child pulling on a drawer could have contributed to the CSU tipping over.

Another factor that contributed to instability was flooring. Staff's testing indicated that the force needed to tip a unit over was less when the CSU was on carpet/padding than when it was on a hard, level floor.

E. Consumer Use Study[60]

In 2019, the Fors Marsh Group (FMG), under contract with CPSC, conducted a study to assess factors that influence consumer attitudes, behaviors, and beliefs regarding CSUs. The study consisted of two components—in-home interviews to collect information about interactions with and use of CSUs in the home, and focus groups to assess consumer perceptions

[60] The full report from FMG, *Consumer Product Safety Commission: Furniture Tipover Report* (Mar. 13, 2020), is available in Tab Q of the NPR briefing package.

of and interactions with CSUs, perceptions of warning information, and factors that influence product selection, classification, and placement. The study included homeowners and renters and participants had a young child in the home, were regularly visited by children, or planned to have children in the near future.

In describing characteristics of CSUs, participants mentioned freestanding products; products that hold clothing; features to organize or protect clothing (*e.g.*, drawers, doors, and dividers); and named, as examples, dressers, armoires, wardrobes, or units with shelving or bins. Participants noted that whether storage components were large enough to fit clothing was relevant to whether a product was a CSU. Participants also noted that they may use smaller, shorter products as CSUs in children's rooms so that children can access the drawers, and because children's clothes are smaller. In distinguishing nightstands from CSUs, participants noted the size and number of drawers, and some reported storing clothing in them. Some participants reported that they would choose and use a product based on its function and ability to meet their needs, rather than by the marketed use of the product.

In looking at images of CSU-like products, participants provided diverse answers, with products participants identified as buffets, nightstands, entry/side/hall tables, or entertainment/TV/media units also being called dressers or armoires by other participants. Products that participants were less likely to consider a CSU or use for clothing had glass doors, removable bins/baskets, or a small number of small drawers.

Participants primarily kept CSUs in bedrooms and used them to store clothing. However, they also noted that they had products that could be used as CSUs in other rooms to store non-clothing and had changed the location and use of products over time, moving them between rooms and storing clothing or other items in them, depending on location.

Focusing on units that the participants' children interacted with the most, the researchers noted that CSUs in children's rooms held clothing and were 70 to 80 percent full of folded

clothing. Participants reported that the children's primary interaction with CSUs was opening them to reach clothing, but also reported children climbing units to reach into a drawer or to reach something on top of the unit. A few participants reported having anchored a CSU. As reasons for not anchoring furniture, participants stated that they thought the unit was unlikely to tip over, particularly smaller and lighter units used in children's rooms, and they do not want to damage walls in a rental unit.

F. Tip Weight Testing[61]

As discussed earlier in this preamble, in 2016 and 2018 through 2019, CPSC staff tested CSUs to assess compliance with requirements in ASTM F2057. As part of the 2018 through 2019 testing, staff also assessed whether CSUs could hold weights higher than the 50-pound weight required in ASTM F2057, testing the CSUs consistent with section 7.2 of in ASTM F2057-19, but with both a 60-pound test weight, and to the maximum test weight (up to 134 pounds) they could hold before tipping over.

Of the 188 CSUs staff tested, 98 (52 percent) held the 60-pound weight without tipping over. The mean weight at which the CSUs tipped over was 61.7 pounds and the median was 62 pounds.[62] The lowest weight that caused a CSU to tip over was 12.5 pounds. The next lowest tip weights were 22.5 pounds (2 CSUs), 25 pounds (6 CSUs), and 27.5 pounds (3 CSUs). One CSU did not tip over when the maximum 134-pound test weight was applied. The next highest tip weights were 117.5 pounds (1 CSU), 112.5 pounds (1 CSU), 102.5 pounds (1 CSU), 97.5 pounds (1 CSU), 95 pounds (1 CSU), and 90 pounds (4 CSUs). Most CSUs tipped over with between 45 and 90 pounds of weight.

[61] A full discussion of this testing and the results is available in Tab N of the NPR briefing package.
[62] This is based on the results for 185 of the units; staff omitted the test weight for three of the CSUs because of data discrepancies.

G. Warning Label Symbols[63]

In 2019, CPSC contracted a study to evaluate a set of 20 graphical safety symbols for comprehension, in an effort to develop a family of graphical symbols that can be used in multiple standards to communicate safety-related information to diverse audiences.[64] The contractor developed 10 new symbols for the project, including one showing the CSU tip-over hazard and one showing the CSU tip-over hazard with a tip restraint; the remaining 10 symbols already existed. The contractor recruited 80 adults and used the open comprehension test procedures described in ANSI Z535.3, *American National Standard Criteria for Safety Symbols* (2011). ANSI Z535.3 defines the criteria for "passing" as at least 85 percent correct interpretations (strict), with fewer than 5 percent critical confusions (*i.e.*, the opposite action is conveyed).

One of the existing symbols the contractor evaluated is the child climbing symbol from the warning label in ASTM F2057-19. The symbol showed passing comprehension (87.5 percent) when scored with lenient (*i.e.*, partially correct) scoring criteria, but poor comprehension (63.8 percent) when scored with strict scoring criteria. There was no critical confusion with the symbol.

The contractor conducted focus groups consisting of 40 of the 80 comprehension study participants. Based on the feedback received in the comprehension study and in focus groups, the contractor developed two new symbol variants, shown in Figure 8.

[63] Details regarding staff's analysis of warning label symbols are available in Tab C of the NPR and final rule briefing packages.
[64] Kalsher, M., CPSC Gather Consumer Feedback: Final Report (2019), available at: https://www.cpsc.gov/s3fs-public/CPSC%20Gather%20Consumer%20Feedback%20-%20Final%20Report%20with%20CPSC%20Staff%20Statement%20-%20REDACTED%20and%20CLEARED.pdf?GTPK5CxkCRmftdywdDGXJyVIVq.GU2Tx.

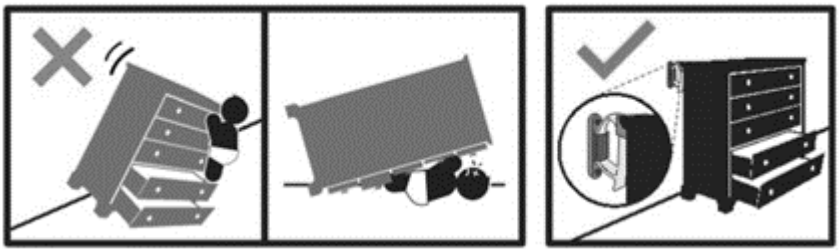	Variant 1
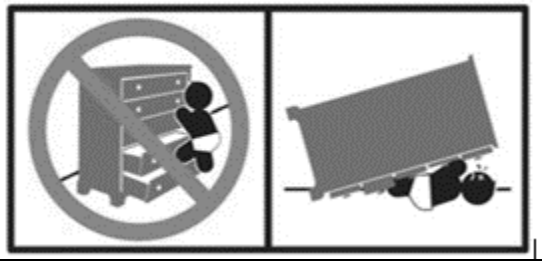	Variant 2

Figure 8: Two variant symbols being tested (one showing the importance of anchoring the CSU, the other demonstrating the tip-over hazard as a result of climbing). Note: the symbols are reproduced in grayscale here, but the color version includes a red "x" and prohibition symbol, and a green check mark. See Tab C of the final rule briefing package for the color version.

The NPR explained that staff was working with the contractor to test these new symbol variants using the same methodology applied in the previous study; would assess whether one of the two variants performed better in comprehension testing than the F2057 child climbing symbol; and would consider requiring the use of these symbols as part of the warning requirements in the final rule.

In November 2021, CPSC released the contractor's report on the assessment of Variants 1 and 2.[65] The results indicated that Variant 1 passed ANSI Z535.3 comprehension testing with both lenient (95.0 percent) and strict (87.5 percent) scoring criteria, with no critical confusions. The comprehension scores for Variant 2 were lower than those for Variant 1 and the ASTM symbol.

[65] Kalsher & Associates, LLC. *CPSC Warning Label Safety Symbol Research: Final Report*. Oct. 27, 2021. Available at: https://www.cpsc.gov/s3fs-public/CPSC-Warning-Label-Safety-Symbol-Research-Final-Report-with-CPSC-Staff-Statement.pdf?VersionId=qCnIivtD0HRs3dEW69p.UVSDxTxvvESq.

H. Tip Restraints and Anchoring[66]

CPSC considered several studies regarding consumer anchoring of furniture to evaluate the potential effectiveness of tip restraints to help address the tip-over hazard. These studies indicate that many consumers do not anchor furniture, including CSUs, in their homes, and that there are several barriers to anchoring, including consumer beliefs, and lack of knowledge about what anchoring hardware to use, or how to install it properly.

A CPSC Consumer Opinion Forum survey in 2010, with a convenience sample of 388 consumers, found that only 9 percent of those who responded to the question on whether they anchored the furniture under their television had done so (27 of 295).[67] The consumers who reported using a CSU to hold their television had approximately the same rate of anchoring the CSU, 10 percent (2 of 21[68]), as the overall rate of anchoring furniture found in the study.

In 2018, Consumer Reports conducted a nationally representative survey[69] of 1,502 U.S. adults, and found that only 27 percent of consumers overall, and 40 percent of consumers with children under 6 years old at home, had anchored furniture in their homes. The study also found that 90 percent of consumers have a dresser in their homes, but only 10 percent of those with a dresser have anchored it. Similarly, although 50 percent of consumers have a tall chest or wardrobe in their homes, only 10 percent of those with a tall chest or wardrobe have anchored it. The most common reasons consumers provided for not anchoring furniture, in declining order, included that their children were not left alone around furniture; they perceived the furniture to

[66] Additional information about tip restraints and anchoring is in Tab C of the NPR briefing package.
[67] Butturini, R., Massale, J., Midgett, J., Snyder, S. Preliminary Evaluation of Anchoring Furniture and Televisions without Tools, Technical Report CPSC/EXHR/TR—15/001 (2015), available at: https://www.cpsc.gov/s3fs-public/pdfs/Tipover-Prevention-Project-Anchors-without-Tools.pdf.
[68] Although 22 respondents reported using a CSU under their television, one of these respondents answered: "I don't know" to the question about whether they anchored the furniture.
[69] Consumer Reports, Furniture Wall Anchors: A Nationally Representative Multi-Mode Survey (2018), available at: https://article.images.consumerreports.org/prod/content/dam/surveys/Consumer_Reports_Wall_Anchors_Survey_2018_Final.

be stable; they did not want to put holes in the walls; they did not want to put holes in the furniture; the furniture did not come with anchoring hardware; they did not know what hardware to use; and they had never heard of anchoring furniture.

As discussed earlier in this preamble, the Commission launched the education campaign—Anchor It!—in 2015, to promote consumer use of tip restraints to anchor furniture and televisions. In 2020, a CPSC-commissioned study assessed consumer awareness, recognition, and behavior change as a result of the Anchor It! campaign.[70] The study included 410 parents and 292 caregivers of children 5 years or younger from various locations in the United States. The survey sought information about whether participants had ever anchored furniture in their homes, and their reasons for not anchoring furniture. The study found that 55 percent of respondents reported ever having anchored furniture, with a greater percentage of parents reporting anchoring furniture (59 percent) than other caregivers (50 percent), and a greater percentage of homeowners reporting ever having anchored furniture (57 percent) than renters (51 percent). For participants who did not report anchoring furniture or televisions, the most common reasons respondents gave for not anchoring, in declining order, were that they did not believe it was necessary, they watch their children, they have not gotten to it yet, it would damage walls, and they do not know what anchors to use.

These results indicate that one of the primary reasons parents and caregivers of young children do not anchor furniture is a belief that it does not need to be anchored if children are supervised. However, research shows that 2- to 5-year-old children are out of view of a supervising parent for about 20 percent of the time that they are awake, and are left alone

[70] The report for this study, Fors Marsh Group, CPSC Anchor It! Campaign: Main Report (July 10, 2020), is available at: https://www.cpsc.gov/s3fs-public/CPSC-Anchor-It-Campaign-Effectiveness-Survey-Main-Report_Final_9_2_2020....pdf?gC1No.oOO2FEXV9wmOtdJVAtacRLHIMK.

significantly longer in bedrooms, playrooms, and living room areas.[71] CSUs are likely to be in bedrooms, where children are expected to have unsupervised time, including during naps and overnight. Many of the CSU tip-over incidents occur in children's bedrooms during these unsupervised times. According to the Consumer Reports study, 76 percent of consumers with children under 6 years old reported that dressers are present in rooms where children sleep or play; and the UMTRI study found that nearly all (95 percent) of child participants had dressers in their bedrooms. Notably, among the 89 fatal incidents, 55 occurred in a child's bedroom; 11 occurred in a bedroom; two occurred in a parent's bedroom; and two occurred in a sibling's bedroom. None of the fatal incidents occurred when the child was under direct adult supervision. However, some nonfatal incidents occurred during supervised time when parents were in the room with the child. As this indicates, supervision is neither a practical, nor effective way to prevent tip-over incidents.

Another common reason caregivers provided for not anchoring furniture was the perception that the furniture was stable. Adults are likely to open only one or a couple of drawers at a time on a CSU; as such, adults may only have experience with the CSUs in their more stable configurations and may underestimate the tip-over hazard. In contrast, incident analysis shows that some children open multiple or all drawers on a CSU simultaneously. As CPSC staff testing and modeling found, opening more drawers contributes further to instability. As such, when children open multiple or all drawers on a CSU, they potentially put the CSU in a much less stable configuration than adults; and children contribute further to instability by climbing the CSU.

[71] Morrongiello, B.A., Corbett, M., McCourt, M., Johnston, N. Understanding unintentional injury-risk in young children I. The nature and scope of caregiver supervision of children at home, Journal of Pediatric Psychology, 31(6): 529-539 (2006); Morrongiello, B. A., Ondejko, L., Littlejohn, A. Understanding Toddlers' In-Home Injuries: II. Examining Parental Strategies, and Their Efficacy, for Managing Child Injury Risk. Journal of Pediatric Psychology, 29(6), pp. 433-446 (2004).

CPSC staff also has concerns about the effectiveness of tip restraints and identified tip-over incidents in which tip restraints detached or broke. Overall, given the low rates of anchoring, the barriers to anchoring, and concerns about the effectiveness of tip restraints, CPSC concludes that tip restraints are not effective as the primary method of preventing CSU tip overs. Effective tip restraints may be useful as a secondary safety system to enhance stability, such as for interactions that generate particularly strong forces (*e.g.*, bouncing, jumping), or to address interactions from older/heavier children. In addition, tip restraints may help reduce the risk of tip overs for CSUs that are already in homes, since this rule only applies to CSUs manufactured after the effective date.

VIII. Response to Comments

CPSC received 66 written comments during the NPR comment period and eight oral comments during the public hearing. The comments are available on: www.regulations.gov, by searching under docket number CPSC-2017-0044. This section describes key comments CPSC received on the substantive requirements in the NPR and responds to them. For more details about the comments CPSC received on the NPR, and CPSC's response to them, see Tab K of the final rule briefing package.

A. Incident Data

Comment: CPSC received comments regarding the rates of CSU tip-over incidents. Some commenters noted the decline in tip-over injuries reported in the NPR and most recent stability report, while others noted that the number of incidents is still too high.

Response: Although there has been a statistically significant decline in NEISS incidents, a large number of fatalities and nonfatal incidents continue and present an unreasonable risk of injury that necessitates rulemaking. As indicated in the NPR, other than 2010, there were at least three reported CSU tip-over fatalities to children without a television involved, each year, for the years 2001 through 2017. In 2018, there was one CSU tip-over fatality to a child without a

television involved; and in 2019, there were two. Although reporting is considered incomplete for fatalities occurring in 2020, and later years, CPSC is already aware of one CSU tip-over fatality with no television involved to a child in 2020, and five child fatalities with no television involved in 2021. Similarly, between 2000 and 2019, there was at least one CSU tip-over death to an adult or a senior in each year, without a television involved, with the exception of 2006 and 2018. In addition, the estimated number of injuries treated in EDs in 2020 and 2021 were likely reduced by the COVID-19 pandemic.[72]

B. Scope and Definitions

Comment: Several commenters requested that specific products be excluded from the scope of the rule. These included comments to exclude wardrobes from the rule because they are covered by an ANSI standard, to exclude file cabinets, and to exclude nightstands.

Response: The final rule addresses CSUs with doors, including wardrobes and armoires, for several reasons. For one, incident data indicate that these CSUs are involved in fatal and nonfatal tip-over incidents. As Tab A of the final rule briefing package indicates, there were six fatal incidents for all ages, including five with CSUs only and one with a CSU and television, that involved wardrobes and armoires. Three of the incidents involved children, including one with a CSU with doors only (no drawers or pull-out shelves). For reported nonfatal incidents for all ages, including both CSUs only, and CSUs with televisions, there were a total of six incidents involving wardrobes and armoires.

Second, developmental considerations and incident data suggest that expected interactions with wardrobes and armoires also generate destabilizing forces, including through opening doors and through child interactions similar to those demonstrated for CSUs with

[72] Schroeder, T., Cowhig, M. (2021). Effect of Novel Coronavirus Pandemic on 2020 NEISS Estimates (March–December, 2020), available at: https://www.cpsc.gov/s3fs-public/Covid-19-and-final-2020-NEISS-estimates-March-December-6b6_edited20210607_0.pdf.

drawers only (*e.g.*, climbing). As this preamble explains, opening doors or extendable elements shifts the CG towards the front of the CSU, and the closer the CG is to the front of the CSU, the less stable the CSU is, and the easier it is to tip forward if a force is applied to the extended door or other element. As such, opening the doors of a CSU will contribute to instability, as will interactions (*e.g.*, a child climbing, hanging, or pulling) that apply additional forces to the open door or extendable elements. Additionally, wardrobes and armoires may contain non-extendable elements, such as shelves, which can act as a handhold or foothold for child interactions, such as climbing or pulling.

In most of the incidents involving CSUs with doors, children were interacting with things inside the CSU, indicating that the doors were open. For example, in one of the fatal incidents, the child victim was found inside a wardrobe that had two doors and one drawer, suggesting that the child opened the doors of the wardrobe. The ages of the children in these incidents ranged from 3 to 11 years, and opening doors is easily within the physical and cognitive abilities of younger children, as well. As indicated, opening features such as doors or extendable elements, on their own, can contribute to instability, by shifting the CG forward. However, this instability is compounded further by forces a child may exert on the open feature, such as doors or drawers. The forces generated by children climbing on drawers, and the extensive evidence of this interaction in incident data, are discussed elsewhere in this preamble. Similar interactions are reasonable to expect for doors. Once CSU doors are open, children are capable of putting their body weight on the open doors (*i.e.*, open and climbing/hanging), provided the child has a sufficient hand hold, which will contribute to instability. This is supported by incident data that show children climb CSUs and open doors. UMTRI researchers found that the vertical forces associated with children hanging by the hands were close to the body weight of the child.[73]

[73] See Figure 48 in Tab R of the NPR briefing package.

Consistent with this, one of the comparison tip-over moments in the rule represents the force from a 95th percentile, 3-year-old child hanging on an open door of the CSU. In addition, many wardrobes and armoires include extendable elements, either in addition to, or behind, doors. These extendable elements present the same hazard discussed for CSUs with extendable elements only, and the potential for this interaction is clear in the incident data.

For these reasons, the final rule does not exclude wardrobes from the definition of a CSU. Moreover, staff reviewed existing standards and determined that they do not adequately reduce the hazard, and the ANSI standard is not mandatory.

The final rule does not explicitly exclude file cabinets from the scope, although some file cabinets may not meet the criteria in the CSU definition (*e.g.*, reasonably expected to be used for storing clothing). The rule does not exclude file cabinets, generally, because some may meet the criteria in the definition, and as consumer studies indicate, consumers use products as CSUs when they serve the functions identified for such products. The final rule also does not exclude nightstands because staff has identified products that are sold as nightstands but feature all of the characteristics of a CSU; consumer studies found that consumers identified and would use such products as CSUs; and CPSC is aware of incidents in which children climbed on nightstands. However, any nightstands that do not meet the criteria in the CSU definition (*e.g.*, under 27 inches tall, insufficient closed storage, reasonable expected use, or extendable elements/doors) would not fall within the scope of the rule.

Comment: A commenter suggested excluding pull-out shelves from the scope of the rule because of a lack of reported tip-over incidents involving CSUs with such features. The commenter also suggested that, if included in the rule, the fill weight for pull-out shelves should be reduced to 4.25 pounds per cubic feet, representing half of the 8.5 pounds used for a drawer's fill weight.

Response: The final rule includes testing of pull-out shelves because these are elements that extend outward from the case of the CSU and are reasonably likely to be loaded with a clothing weight. As such, when open and loaded, a pull-out shelf would increase the instability of a CSU like an open and filled drawer.

As explained, the NPR proposed to use the same fill weight of 8.5 pounds per cubic foot of functional volume for drawers and pull-out shelves, but it raised the possibility that fill weight for pull-out shelves may be lower than for drawers (*e.g.*, 4.25 pounds per cubic foot) if pull-out shelves can hold less clothing fill than a drawer while remaining operable and containing the clothing when the shelf moves. CPSC did not receive any data regarding this in comments on the NPR. However, staff has further assessed this possibility and found that pull-out shelves can hold the same volume of clothing as drawers, remain fully functional, and sufficiently contain the clothing content when moving the shelf, and present the same hazard and risk of injury as drawers.[74] Accordingly, the final rule retains the 8.5 pounds per cubic foot of functional volume fill density for pull-out shelves.

Comment: One commenter suggested adding to the definition of a "CSU" that it includes "a top surface and side panels that are rigid and solid" and specifying that they are "typically found in a bedroom environment."

Response: Most CSUs are made of rigid and solid materials because these features are generally necessary to enable the unit to stand upright and hold extension elements. However, there are CSUs that have some non-rigid elements, retain extension elements, and present the same tip-over hazard. As such, these features are not included in the definition. The final rule also does not include "typically found in a bedroom environment" in the definition of a CSU because consumers use CSUs in rooms other than bedrooms and use furniture that is marketed

[74] For details regarding staff's assessment of clothing fill in pull-out shelves, see Tab C of the final rule briefing package.

for non-bedroom use as CSUs in bedrooms when the furniture looks and functions like a CSU. As the studies discussed in the NPR indicate, consumers use products as CSUs based on their functionality, not based on where the product is typically located in a residence.

Comment: One commenter suggested changing the CSU minimum volume criterion from 1.3 cubic feet to 3 cubic feet, which the commenter believed better represents a volume that consumers associate with a CSU.

Response: As the NPR explained, the 1.3 cubic feet minimum is based on the smallest total functional volume of the closed storage for a CSU involved in a nonfatal incident without a television, which was 1.38 cubic feet. Staff rounded this down to 1.3 cubic feet to ensure that CSU would be included in the definition. Details regarding this incident unit and the calculations are in Tab C of the NPR briefing package. A larger threshold would exclude from the scope of the rule products likely to be used as CSUs and that are demonstrated in incident data to pose the same tip-over hazard. Given this assessment, 1.3 cubic feet is a reasonable threshold, based on incident information, and thus, the final rule retains this.

Comment: One commenter requested clarification of the terms "open storage" and "open space" that are relevant to the definition of a CSU.

Response: The final rule retains the same meaning of these terms, but includes wording modifications and the addition of examples to clarify the definitions. These revisions are discussed in section **IX. Description of and Basis for the Rule**.

Comment: CPSC received several comments suggesting that the scope of the rule should exclude CSUs that weigh less than 30 pounds when empty. A manufacturer of lightweight plastic CSUs stated that approximately 15 million such units over 27 inches tall were sold over the past 25 years and the rule would ban such products because they would be unable to meet the stability requirements. Commenters stated that such a ban would not serve a safety purpose, citing a lack of incident data involving lightweight CSUs. In support of the 30-pound threshold, commenters

noted that ASTM is considering a similar limit in revising its CSU standard and that this threshold aligns with the 34-pound CSU described in the NPR as being involved in a fatal tip-over incident, as well as the 31-pound CSU involved in a nonfatal incident.

Response: See section **IX. Description of and Basis for the Rule** for a detailed response to this comment. To summarize, the final rule excludes from the definition of a "CSU" certain products that do not meet a minimum loaded-weight threshold. This will exclude from the scope of the rule some lighter-weight CSUs, while continuing to cover CSUs that pose a risk of serious injuries and death when they tip over.

Comment: CPSC received a comment stating that the "closed storage" definition should include both opaque drawers and doors, and not just opaque doors.

Response: The final rule includes "opaque doors" in the definition because research showed that consumers perceive glass (non-opaque) doors to be for display instead of clothing storage. In contrast, there are CSUs on the market with clear drawers or drawer fronts, including lightweight plastic units that have non-opaque drawers, and that consumers use as CSUs. Consequently, the definition only applies to doors, and not opaque drawers, to reflect consumer perceptions and use.

Comment: A commenter stated that the definition of "drawer" should include "rigid, solid, and enclosed" and exclude "bins" because such features do not appear to be involved in incident data.

Response: Although most drawers in CSUs are rigid, solid, and enclosed, some units have drawers with flexible sides (*e.g.*, cloth or mesh over rigid frames, cardboard, plastic) that are marketed and can be used as CSUs; can be loaded to sufficient weight to pose a hazard; and can present the same tip-over hazard as CSUs with rigid/solid drawers. For this reason, the final rule does not include "rigid, solid, and enclosed" as part of the definition of a "drawer." However, staff also recognizes that the hazard presented by a drawer or similar feature is that it

serves as an extension element that can bear forces/weight (*e.g.*, of clothing load or child interactions) that contribute to the instability of a CSU. For this reason, CPSC considers it appropriate to distinguish between such units and those for which the extendable element would not have this destabilizing effect. As such, the final rule defines a "drawer" as a furniture component intended to contain or store items and that slides horizontally in and out of the furniture case, and may be attached to the case by some means, such as glides. This is the same definition as in the NPR. However, the final rule also adds to the definition an explanation that only components that are retained in the case when extended up to 2/3 of the shortest internal length, when empty, are included in this definition. This revision is discussed in section **IX. Description of and Basis for the Rule**.

Comment: Several comments suggested expanding the scope of the rule to include CSUs that are 24 inches or taller, instead of 27 inches or taller, and one commenter suggested a height limit of 12.1 inches, based on child heights.

Response: The 27-inch height threshold in the rule is based on incident information and industry input. As discussed in the NPR, ASTM revised the scope of ASTM F2057 in the 2019 version so that it includes CSUs that are 27 inches or taller, rather than 30 inches or taller. This change was based on incidents involving units 30 inches in height and under. Specifically, the shortest height of a CSU involved in a fatal incident without a television was 27.5 inches. Although there are nonfatal incidents involving units shorter than 27 inches, the number of incidents associated with shorter units is small, and these incidents did not result in deaths or serious injuries. For these reasons CPSC considers 27 inches an appropriate height threshold to adequately address the hazard.

Comment: Several commenters suggested removing from the scope of the rule CSUs that have only doors and no drawers. They stated that these units are less susceptible to children climbing and are less represented in incident data.

Response: Although the storage on CSUs with doors only does not extend, such CSUs typically have shelves or other features that children can use to climb or interact with, just like other CSUs. Moreover, it is easily within the physical and cognitive capabilities of children, including younger ones, to open doors, and it is consistent with children's physical and cognitive abilities to expect that children will put their body weight on doors, creating a similar effect on instability as children putting their weight on drawers. The child climbing study (Tab R of the NPR briefing package) found that the vertical forces associated with a child hanging by the hands are close to the body weight of a child. In addition, CSUs with only doors have been involved in tip-over incidents. As discussed in the NPR, CPSC identified a fatal tip-over incident involving a unit with doors only (no drawers or other extension elements). For these reasons, CSUs with only doors present a similar tip-over hazard as CSUs with drawers or other extendable elements and the final rule retains these within its scope.

Comment: One commenter suggested regulating only CSUs that are children's products, while another commenter suggested requiring more stringent standards for children's products, and others suggested that the rule should apply to all CSUs.

Response: As explained in the NPR, general-use CSUs are more heavily represented in the incident data than children's products, and children's interactions are not limited to CSUs intended for children. In addition, general-use CSUs are commonly used in children's rooms, as indicated by the studies discussed in the NPR. Accordingly, focusing the rule only on children's products, or requiring more stringent requirements for children's products only, would not adequately address the hazard.

C. Stability Requirements

CPSC received comments regarding the stability requirements, including interlock requirements, in the rule, as well as definitions relevant to those requirements. Those comments are discussed in section **IX. Description of and Basis for the Rule**, to explain revisions made to

the rule in response to the comments. Additional details are also available in Tabs D and K of the final rule briefing package.

D. Marking and Labeling Requirements

Comment: Several commenters expressed concern that warnings are not an effective way to address the tip-over hazard, suggesting that consumers may not read or heed warnings.

Response: Warning labels, on their own, are a less effective way to address a hazard than performance or design requirements that reduce or eliminate a hazard, in part because warning labels rely on consumers seeing, understanding, and following the warnings. For this reason, the final rule includes requirements to provide for inherent stability of CSUs. However, there are steps consumers can take to further reduce the risk of CSU tip overs, and these steps are presented on the required warning labels. The content, format, and placement requirements are intended to improve the likelihood that consumers will notice, comprehend, and comply with the warnings.

Comment: Commenters suggested revisions to the warning label content requirements, including allowing manufacturers to determine what hazards to address on the label, and how to address them; providing warnings about the use of CSUs on carpet; and including warnings in Spanish.

Response: CPSC staff developed the warning label requirements in the rule based on commonly used approaches in voluntary standards, ASTM's warning label requirements, consumer studies, research, human factors assessments, and staff's expertise. As such, the warning label requirements are designed to include content and format requirements that are likely to be effective. Allowing manufacturers to modify content may detract from the effectiveness of the label and would not benefit from staff's insights and expertise. To clarify that the warning label content must precisely match that in the final rule, the final rule also includes a statement that the content must not be modified or amended, except as specifically

permitted in the rule. However, nothing in the rule prevents manufacturers from placing a separate label on CSUs to communicate their desired content.

The final rule does not include in the warning label, statements regarding the use of CSUs on carpet. This is because consumers commonly have carpet where they place CSUs and may not have the option to remove the carpet. As explained in the NPR, warnings that are inconsistent with expected consumer use are not likely to be effective.

Although the final rule does not require that warning labels be provided in languages other than English, manufacturers may include such labels, separate from the required label, and commonly do so for other products on the U.S. market.

Comment: As discussed above and in the NPR, CPSC contracted for a focus group study to evaluate comprehension of potential variants to the symbol proposed for the warning label in the NPR. That study found that one of the variants performed better in comprehension than the alternatives under consideration; that variant is required in the final rule. One commenter noted that, although they support the variant, they are concerned about the type of anti-tip device shown in the symbol.

Response: The rationale for selecting the variant in the final rule is discussed below. However, to address the commenter's concern, the final rule specifies that the panel in the symbol that shows the anti-tip device may be modified to show a specific anti-tip device included with the CSU.

Comment: The rule requires that the identification label be legible and attached after it is tested using the methods specified in section 7.3 of ASTM F2057-19. A major manufacturer and retailer commented that the identification label should not be limited to a "label" because other means of applying the information to the product (*e.g.*, printing, etching, engraving, or burning) can also be sufficiently permanent and more cost-effective.

Response: The permanency testing requirements in section 7.3 of ASTM F2057-19 include requirements for paper labels, non-paper labels, and those applied directly to the surface of the product. As such, the rule does not prevent firms from applying the identification label in various ways that can be tested and comply with the requirements in section 7.3 of ASTM F2057-19. However, to make this clear, the final rule includes the term "mark," in addition to "label," to signal the availability of marking applied directly to the product for meeting the requirement.

E. Hang Tags

Comment: Several commenters expressed concerns with the rating scale, which the NPR proposed to range from 0 to 5, with a minimum score of 1 necessary to comply with the stability requirements in the rule. For the lower range of the scale, commenters noted that the scale need not start at 0 since CSUs may not have a rating below 1. For the upper limit of the scale, commenters stated that CPSC's and industry testing indicate that, even with modifications, CSUs that are currently on the market cannot exceed a stability rating of 2. Consequently, a scale that goes up to 5 may confuse consumers when they cannot find CSUs with ratings higher than 2 or may suggest that CSUs with a rating of 2 are unsafe. One commenter expressed concern that it will be costly to modify CSUs to achieve the required minimum rating of 1, let alone higher ratings. Commenters also requested clarification on whether the stability rating may be rounded, and suggested that CPSC use whole numbers, rather than decimals, to avoid consumer confusion.

Response: As indicated in the NPR, CPSC staff's testing found that CSUs currently on the market do not exceed a stability rating of 2, even when modified to comply with the rule. Based on those test results and the above comments, the stability rating scale in this final rule ranges from 1 to "2 or more." This is consistent with the minimum required rating of 1 and reflects realistic maximum stability ratings, while still allowing for designs to exceed a rating of 2. The final rule also specifies that stability ratings are to be rounded to one decimal place, which

facilitates comparisons of CSUs with ratings between 1 and 2 and allows for easy comparison of CSUs (*e.g.*, a CSU with a rating of 2 is twice as stable as a CSU with a rating of 1). If CSUs increasingly achieve stability ratings greater than 2, the Commission can adjust the upper end of the scale in future rulemaking. As for costs, it is common in other product sectors with safety rating scales for manufacturers to offer products with a variety of ratings and prices to meet different consumer demands.

Comment: Some commenters stated that a stability rating hang tag may create a false sense of security in consumers, making them less likely to take added safety precautions, such as anchoring CSUs to a wall.

Response: The hang tag includes statements, such as "no unit is completely safe from tip over" and "always secure the unit to the wall" to warn consumers of the risk of tip overs and steps they can take to reduce those risks. Additional explanations on the back of the hang tag and on required warning labels provide further information about the hazard and ways to mitigate it.

Comment: Several commenters recommended places the hang tag information should be provided to ensure it is useful to consumers. Suggestions included at points of sale, including in showrooms and on sales websites; in instructions; on packages; on receipts; via emails provided by sellers upon purchase; and as permanent labels on CSUs so the information is visible to second-hand users. Some commenters recommended not requiring the hang tag appear on a CSU itself or on packaging, but only at points of sale, because that is when consumers make buying decisions.

Response: Consistent with the purpose of section 27(e) of the CPSA, the above comments, and the goal stated in the NPR of providing comparative safety information to consumers at the time they make buying decisions, the final rule requires that the hang tag information be provided at physical points of purchase, such as retail stores; on the CSU and package; and on manufacturer or importer websites where consumers may purchase the CSU

directly. As the NPR discussed, requiring the hang tag be visible at a physical point of sale ensures the safety information is available to consumers when making a buying decision in stores. The final rule retains the requirement that the hang tag be provided on the CSU and its packaging because this ensures that the hang tag is visible to consumers at the time of purchase, regardless of how the product is displayed in a store (*e.g.,* assembled and displayed, or packaged). Because consumers also buy CSUs online, this is also a "time of purchase" where it is important for consumers to have the comparative safety information to make informed buying decisions. This requirement is limited to manufacturer and importer websites where the CSU can be purchased because section 27(e) of the CPSA only grants the Commission authority to require manufacturers (which includes importers) to provide performance and technical data, and it may only be required at the "time of original purchase." Similarly, because section 27(e) only grants authority with respect to an "original purchase" and "the first purchaser," the rule does not require the hang tag be placed in a way that would make it available to second-hand users. However, warning label requirements elsewhere in the rule make tip-over information available to second-hand users.

Comment: One commenter stated that the information on the back of the hang tag should be on the front to ensure consumers see an explanation of the rating. Another commenter expressed concern that using text is problematic for consumers who are not fluent in English.

Response: To ensure consumers can quickly understand the meaning of the stability rating, the final rule requires an additional statement on the front of the hang tag stating, "This unit is [rating value] times more stable than the minimum required," with the stability rating of the CSU inserted for the bracketed text. Regarding English text, although the hang tag requirement only includes English, the rule does not prevent manufacturers from including a separate hang tag in another language, and the hang tag also includes numbers and pictures to convey meaning regardless of language.

F. Stockpiling Requirement

Comment: Several commenters expressed support for the anti-stockpiling provisions in the NPR, noting that industry members had sufficient notice of the rule given the duration of the rulemaking and that stockpiling limits are necessary to prevent industry members from increasing production of noncompliant CSUs. One commenter recommended a shorter and more limited stockpiling requirement and another recommended a limit based on the "best" year in the past 5 years, rather than the 13 months proposed in the NPR, because the previous 13 months are not representative due to supply chain issues during that period.

Response: The anti-stockpiling provisions in the final rule balance the competing policy goals of addressing the hazard and preventing stockpiling and sales of noncompliant CSUs while accounting for realistic supply chain limits and the cost to businesses to comply with the rule. Although less stringent anti-stockpiling requirements could reduce the burden on industry members, it would also delay or reduce the safety benefits of the rule and would disadvantage companies that offer compliant CSUs sooner in market competition with non-compliant CSUs. The Commission considers the provisions appropriate to balance these interests.

G. Economic Analyses

CPSC received numerous comments regarding the economic analyses in the NPR, including the preliminary regulatory flexibility analysis and the preliminary regulatory analysis. Comments addressed the costs of compliance for small businesses and ways to reduce those burdens, as well as the estimated costs and benefits of the rule, including: costs for manufacturers and importers, including for testing; costs to consumers; costs of interlocks; lost sales of matching furniture; the impact of the scope of products covered by the rule on benefits and costs; the Injury Cost Model and value of statistical life used to estimate benefits; the effective date; and alternatives. Comments from the U.S. Small Business Administration's Office of Advocacy are addressed in the final regulatory flexibility analysis in this preamble. A

summary of comments and responses regarding the economic analyses are provided Tabs H, I, and K of the final rule briefing package. As the briefing package explains, CPSC has updated the economic analyses for this final rule based on commenter input.

IX. Description of and Basis for the Rule

A. Scope, Application and Definitions[75]

The final rule includes provisions regarding the scope of the standard, application, and definitions of terms in the standard. The definition of a "CSU" is the basis for the scope of the rule and several terms within that definition are also defined in the standard. The final rule includes minor revisions to the application section of the rule and some definitions in the rule that do not alter the substance of these provisions. For example, the application section no longer includes the CPSA definition of a "consumer product" because the definitions section notes that CSUs are "consumer products" and refers to the definitions provided in the CPSA. Also in the application section, the statement that the rule applies to CSUs "manufactured in the United States, or imported, on or after" the effective date has been revised to indicate that the rule applies to CSUs manufactured after the effective date. This revision aligns with the statutory language in section 9(g)(1) of the CPSA, which states that a safety standard issued under section 9 of the CPSA applies to consumer products that are "manufactured after the effective date." 15 U.S.C. 2058(g)(1).

In addition, the final rule includes some substantive revisions to the definitions to address issues raised by commenters and identified by CPSC staff. This section focuses on the definition of a CSU and key terms used in that definition and defined in the standard, particularly terms for which the definitions have been revised since the NPR (*i.e.*, "drawers," "freestanding," "open

[75] For additional information about scope and definitions, see Tabs C and D of the NPR briefing package, and Tabs C, D, and K of the final rule briefing package.

storage," and "open space"). Additional definitions in the standard are discussed in the section below on stability requirements, where those terms are relevant.

1. Final Rule Requirements

The final rule applies to CSUs, defined as a consumer product that is a freestanding furniture item, with drawer(s) and/or door(s), that may be reasonably expected to be used for storing clothing, that is designed to be configured to greater than or equal to 27 inches in height, has a mass greater than or equal to 57 pounds with all extendable elements filled with at least 8.5 pounds/cubic foot times their functional volume (cubic feet), has a total functional volume of the closed storage greater than 1.3 cubic feet, and has a total functional volume of the closed storage greater than the sum of the total functional volume of the open storage and the total volume of the open space.

The rule specifically states that whether a product is a CSU depends on whether it meets this definition. However, to demonstrate which products may meet the definition of a CSU, the standard provides names of common CSU products, including chests, bureaus, dressers, armoires, wardrobes, chests of drawers, drawer chests, chifforobes, and door chests. Similarly, it names products that, depending on their design, generally do not meet the criteria in the CSU definition, including shelving units, office furniture, dining room furniture, laundry hampers, built-in closets, and single-compartment closed rigid boxes (storage chests).

Additionally, the rule exempts from its scope two products that generally would meet the definition of a CSU—clothes lockers and portable storage closets. It defines "clothes locker" as a predominantly metal furniture item without exterior drawers and with one or more doors that either lock or accommodate an external lock; and defines "portable storage closet" as a freestanding furniture item with an open frame that encloses hanging clothing storage space and/or shelves, which may have a cloth case with a curtain(s), flap(s), or door(s) that obscures the contents from view.

2. Basis for Final Rule Requirements

To determine the scope of products that the rule should address to adequately reduce the risk of injury from CSU tip overs, CPSC considered the nature of the hazard, assessed what products were involved in tip-over incidents, and assessed the characteristics of those products in relation to stability and children's interactions.

a. The Hazard

The CSU tip-over hazard relates to the function of CSUs, where they are used in the home, and their design features. A primary feature of CSUs is that typically they are used for clothing storage; however, putting clothing in a furniture item does not create the tip-over hazard on its own. Rather, the function of CSUs as furniture items that store clothing means that consumers and children are likely to have easy access to the unit and interact with it daily, resulting in increased exposure and familiarity. In addition, caregivers may encourage children to use a CSU on their own as part of developing independent skills. As a result, children are likely to know how to open drawers of a CSU, and are likely to be aware of their contents, which may motivate them to interact with the CSU. For this reason, one element of the definition of "CSUs" is that they are reasonably expected to be used for storing clothing.

CSUs are commonly used in bedrooms, an area of the home where children are more likely to have unsupervised time. As stated in the NPR, most CSU tip-over incidents occur in bedrooms: among the 89 fatal tip-over incidents reviewed in the NPR involving children and CSUs without televisions, 99 percent of the incidents with a reported location (70 of 71 incidents) occurred in a bedroom. This use means that children have more opportunity to interact with the unit unsupervised, including in ways more likely to cause tip over (*e.g.,* opening multiple drawers and climbing).

Another primary feature of CSUs is closed storage, which is storage within drawers or behind doors. These drawers and doors are elements that can extend from the furniture case,

which allow children to exert vertical force further from the tip point (fulcrum) than they would be able to without drawers and doors and that make it more likely that a child will tip the product during interactions. In addition, these features may make the product more appealing to children as a play item. Children can open and close the drawers and doors and use them to climb, bounce, jump, or hang; they can play with items in the drawers or get inside the drawers or cabinet. Children can also use the CSU drawers and doors for functional purposes, such as climbing to reach an item on top of the CSU. Accordingly, the definition of "CSUs" includes a minimum amount of closed storage and the presence of drawers and/or doors as an element. The element of the definition that indicates that a CSU has a total functional volume of the closed storage greater than 1.3 cubic feet and greater than the sum of the total functional volume of the open storage and the total volume of the open space is based on the total functional drawer volume for the shortest/lightest reported CSU involved in a nonfatal incident without a television, testing of CSUs, and analysis of the hazard pattern. CPSC rounded the volume down, so that CSUs with this closed storage would be included in the definition.

The CSUs definition also states that the products are freestanding furniture items, which means that they remain upright, without needing attachment to the wall or other upright structures, in their normal use position. The lack of permanent attachment to the building structure means that CSUs are more susceptible to tip over than built-in storage items in the home.

b. Product Categories in Incident Data

For this rulemaking, staff focused on product categories that commonly meet the general elements of the definition of a CSU, in analyzing incident data; these included chests, bureaus, dressers, armoires, wardrobes, portable storage closets, and clothes lockers. As detailed in the discussion of incident data, of the child fatalities involving CSUs, 196 involved a chest, bureau, or dresser; 2 involved a wardrobe; 1 involved an armoire; and none involved a portable storage

closet or clothes locker. Of the 1,154 reported CSU tip-over incidents (all ages), 1,148 incidents involved a chest, bureau, or dresser; 5 involved an armoire; 1 involved a wardrobe; and none involved a portable storage closet or clothes locker.

Based on these data, the definition of CSUs names chests, bureaus, dressers, wardrobes, and armoires as examples of CSUs that are subject to the standard. The rule exempts clothes lockers and portable storage closets from the scope of the standard because there are no reported tip-over fatalities or injuries to children that involved those products, and based on an analysis of the risk, usage, and hazard presented by these products.

The final rule addresses CSUs with doors, including wardrobes and armoires, for several reasons. For one, incident data indicates that these CSUs are involved in fatal and nonfatal tip-over incidents. As Tab A of the final rule briefing package indicates, there were 6 fatal incidents for all ages, including 5 with CSUs only and 1 with a CSU and television, that involved wardrobes and armoires. Three of the incidents involved children, including one with a CSU with only doors (no drawers or pull-out shelves). For reported nonfatal incidents for all ages, including both CSUs only and CSUs with televisions, there were a total of 6 incidents involving wardrobes and armoires. This demonstrates that armoires and wardrobes are implicated in tip-over incidents and, therefore, need to be addressed in the rule.

Second, developmental considerations and incident data suggest that expected interactions with wardrobes and armoires also generate destabilizing forces, including through opening doors and through child interactions similar to those demonstrated for CSUs with only drawers (*e.g.*, climbing). As this preamble explains, opening doors or extendable elements shifts the CG towards the front of the CSU, and the closer the CG is to the front of the CSU, the less stable the CSU is and the easier it is to tip forward if a force is applied to the extended door or other element. As such, opening the doors of a CSU will contribute to instability as will interactions (*e.g.*, a child climbing, hanging, or pulling) that apply additional forces to the open

door or extendable elements. Additionally, wardrobes and armoires may contain non-extendable elements, such as shelves, which can act as a hand hold or foot hold for child interactions such as climbing or pulling.

In most of the incidents involving CSUs with doors, children were interacting with things inside the CSU, indicating that the doors were open. For example, in one of the fatal incidents, the child victim was found inside a wardrobe that had two doors and one drawer, suggesting that the child opened the doors of the wardrobe. The ages of the children in these incidents ranged from 3 to 11 years, and opening doors is easily within the physical and cognitive abilities of younger children, as well. As indicated above, opening features such as doors, drawers, and pull-out shelves, on their own, can contribute to instability by shifting the CG forward. However, this instability is further compounded by forces a child may exert on the open feature, such as doors or drawers. The forces generated by children climbing on drawers, and the extensive evidence of this interaction in incident data, is discussed elsewhere in this preamble. Similar interactions are reasonable to expect for doors. Once CSU doors are open, children are capable of putting their body weight on the open doors (*i.e.*, open and climbing/hanging), provided the child has a sufficient hand hold, which will contribute to instability. This is supported by incident data that shows children climb CSUs and open doors. UMTRI researchers found that the vertical forces associated with children hanging by the hands were close to the body weight of the child.[76] Consistent with this, one of the comparison tip-over moments in the rule represents the force from a 95th percentile 3-year-old child hanging on an open door of the CSU. In addition, many wardrobes and armoires include extendable elements, either in addition to or behind doors. These extendable elements present the same hazard discussed for CSUs with only extendable elements, and the potential for this interaction is clear in the incident data.

[76] See Figure 48 in Tab R of the NPR briefing package.

For these reasons, the final rule includes wardrobes and armoires within the scope. In addition, wardrobes and armoires are similar in design to the other CSUs included in the scope (unlike portable storage closets), and they are more likely to be used in homes than clothes lockers.

c. Product Height

Results from FMG's CSU focus group[77] suggest that consumers seek out low-height CSUs for use in children's rooms "because participants would like a unit that is an appropriate height (*i.e.*, short enough) for their children to easily access their clothes." The average shoulder height of a 2-year-old is about 27.4 to 28.9 inches.[78] In the in-home interviews, researchers observed that CSUs in children's rooms typically were low to the ground and wide. Based on this information, children may have more access and exposure to low-height CSUs than taller CSUs, which supports including shorter CSUs within the scope of the rule.

In addition, as explained in the NPR, the height of the CSU was reported for 53 fatal and 72 nonfatal CPSRMS tip-over incidents involving children and CSUs without televisions. The shortest reported CSU involved in a fatal incident without a television was a 27.5-inch-tall, 3-drawer chest, which tipped over onto a 2-year-old child. Although there are nonfatal incidents involving shorter units, the number of incidents associated with shorter units is small and these incidents did not result in deaths or serious injuries. For this reason, the NPR and final rule include a 27-inch threshold to ensure that the identified fatal incident unit would be included within the scope of the rule. Moreover, the 27-inch height threshold is consistent with ASTM F2057-19, which decreased the height threshold from 30 inches to 27 inches.

[77] See Tab Q of the NPR briefing package.
[78] The mean standing shoulder height of a 2-year-old male is 28.9 inches and 27.4 inches for a 2-year-old female. Pheasant, S., Bodyspace Anthropometry, Ergonomics & Design. London: Taylor & Francis (1986).

For these reasons, the rule defines "CSUs" as including products that are designed to be configured to greater than or equal to 27 inches in height. The definition of a "CSU" in the NPR included that the unit be 27 inches tall or greater. The final rule retains this criterion, but also clarifies that this is determined by the height to which the CSU is designed to be configured. Staff has identified CSUs that are designed such that the height can be adjusted from below 27 inches to 27 inches or greater (such as by adjusting levelers or glides). Therefore, consistent with the NPR and to ensure that any units 27 inches tall or more are covered by the rule, the wording in the final rule has been adjusted accordingly.

d. Product Names and Marketed Use

The definition of "CSUs" relies on characteristics of the unit to identify covered products, rather than product names or the manufacturer's marketed use of the product. This is because, as the NPR and this preamble discuss, there are various products that consumers identify and use as CSUs and that pose the same tip-over hazard, regardless of how the product is named or marketed.

In the FMG CSU use study,[79] participants showed flexibility in how they used CSUs and other similar furniture in the home, depending on their needs, aesthetics, and where the unit was placed within the home. For example, one participant put a large vintage dresser in their living room and used it for non-clothing storage; one participant said that their dresser was used as a changing station and held diapers, wipes, creams, and medical supplies, but is now used to store clothes; and a participant said that the dresser in their child's room was originally used to store dishes.

Some participants in the in-home interviews and focus groups used nightstands for clothing storage, including for shirts; socks; pajamas; slippers; underwear; smaller/lighter items,

[79] See Tab Q of the NPR briefing package.

such as tights or nightwear; seasonal items; and accessories. Participants also had a wide variety of interpretations of the marketing term "accent piece," with some saying that they use accent pieces for clothing storage, and one identifying a specific accent piece in their home as a CSU. Overall, the results from the study suggest that there is not a distinct line between units that people will use for clothing storage, as opposed to other purposes; and even within a unit, the use can vary, depending on the consumer's needs at the time.

CPSC also is aware of products that are named and advertised as generic storage products with multiple uses around the house, or they are advertised without context suggesting a particular use. Many of these items clearly share the design features of CSUs, including closed storage behind drawers or doors. In addition, CPSC is aware of products that appear, based on design, to be CSUs, but are named and advertised for other purposes (*e.g.*, an "accent piece" with drawers staged in a foyer, and large multi-drawer "nightstands" over 27-inches tall). CPSC is also aware of hybrid products that combine features of CSUs with features of other product categories.

Using the criteria in the definition of a CSU, products typical of shelving units, office furniture, dining room furniture, laundry hampers, built-in units, and single-compartment closed rigid boxes likely would not be CSUs. The rule generally excludes these products, by including in the definition of "CSUs" that a CSU is freestanding; has a minimum closed storage functional volume greater than 1.3-cubic feet; has a closed storage functional volume greater than the sum of the open storage functional volume and open space volume; has drawer(s) and/or door(s); and is reasonably expected to be used for clothing. At the same time, some furniture, such as occasional/accent furniture, and nightstands could be CSUs. The criteria for identifying a CSU in the rule would keep some of these products within scope, and exclude others, depending on their closed storage, reasonable expected use, and the presence of doors/drawers, such that those

products that may be used as CSUs and present the same hazard, would be within the scope of the standard, while those that would not, would be excluded.

Because consumers select units for clothing storage based on utility, rather than marketing, and there are products that are not named or advertised as CSUs but are indistinguishable from CSUs based on their design, the "CSU" definition does not rely on how a product is named or advertised by a manufacturer.

e. Product Weight

NPR and final rule. In the NPR, the Commission did not propose to include a weight criterion as part of the definition of a CSU, noting that consumers use light weight units as CSUs and such units can be loaded to weigh as much as CSUs involved in fatal tip-over incidents when filled with 8.5 pounds per cubic foot of storage volume (*i.e.*, the load representative of normal clothing fill). However, the NPR did raise the possibility of excluding certain lightweight units that may not pose the same risk of death or serious injury in a tip-over incident. The NPR noted that CPSC did not identify any tip-over incidents involving lightweight plastic units, but also indicated that the type and weight of unit was undetermined in many incidents. The NPR explained that the lowest-weight non-modified[80] CSU involved in a fatal tip-over incident weighed 57 pounds total at the time of the incident (because the unit was reportedly empty), and other lower-weight units in fatal incidents weighed 57.5 pounds and 68 pounds. The NPR also requested comments on excluding certain lightweight units from the scope of the rule.

The final rule includes in the definition of a CSU the criterion that the unit have a mass greater than or equal to 57 pounds with all extendable elements (*i.e.*, drawers and pull-our shelves) filled with at least 8.5 pounds per cubic foot times their functional volume. This results

[80] There was a CSU identified in a fatal tip-over incident without a television that weighed 34 pounds, but that was missing several drawers at the time of the incident, and the drawer fill was unknown, making the total weight unclear.

in excluding certain lightweight units from the definition of a CSU and the scope of the rule. Specifically, if the weight of the empty CSU and a clothing fill weight of 8.5 pounds per cubic foot of functional storage volume totals 57 pounds or more, then the unit falls within the scope of the rule. If the total weight of the empty CSU and this clothing fill is less than 57 pounds, the unit is excluded from the definition of a CSU. This revision is based on comments received on the NPR, staff's assessment of the mechanism of injury with lightweight CSUs, lightweight CSU incidents discussed in the NPR, staff's assessment of the total weights such units can achieve, and the effect of a lightweight exception on the effectiveness of the final rule. Because the hazard results from the total weight of a CSU during expected use (*i.e.*, with clothes) and not merely the weight of an empty CSU, the final rule accounts for this risk by including units that weights greater than or equal to 57 pounds when filled with a clothing fill weight of 8.5 pounds per cubic foot of functional storage volume.

Comments on the NPR. Several comments on the NPR suggested that lightweight units with an empty weight of 30 pounds or less should be excluded from the scope of the rule. Commenters noted that, for incidents in which the type/weight of the unit is known, there are no known incidents involving such lightweight units and that lighter weight units would not be able to meet the stability requirements in the rule, thereby removing such products from the market.

Mechanism of injury. CPSC staff assesses that heavier CSUs pose a greater potential for injuries and for more severe injuries because the mass/weight of the CSU is a key component in the mechanisms that cause injury or death in a CSU tip-over. Accordingly, lighter weight CSUs may pose less of a risk of serious injury and death in a tip-over incident than heavier weight units when they cannot hold enough clothing to bring their filled weight to 57 pounds. Head injuries, compressional and mechanical asphyxia, and strangulation are the leading causes of injuries in CSU tip-over incidents. The mass/weight of the CSU is one key factor that contributes to these injuries because higher mass CSUs create greater impact forces and compressional forces,

thereby increasing the risk and severity of injuries. High mass/weight CSUs also make self-rescue more difficult because children are less likely to be able to move the fallen CSU or get out from under it.

Incident analysis. Staff considered what weight limit would capture CSUs that are heavy enough to present an unreasonable risk of injury during a tip-over incident, while excluding lighter weight units that are unlikely to pose the same hazard. To identify an appropriate weight limit for CSUs, staff reexamined the incident data where the CSU weights were reported or where staff could determine the weight of the CSUs based on product information or other data sources. Table 1 shows the lightest weight CSUs involved in fatal and nonfatal incidents. Note that Table 1 includes units with heights less than 27 inches, which would result in them not meeting the definition of a CSU in the rule. However, staff included these in the analysis because they were the lightest weight units involved in incidents and, as such, indicate the lowest weights that may result in injuries.

Table 1. Lightest Weight CSUs Involved in Fatal and Nonfatal Tip-Over Incidents

Injury	CSU empty weight (pounds)	CSU height (inches)	In scope under NPR	In scope under final rule
Fatal Incidents				
Death – chest compression	34 (with 3 bottom drawers missing from a 5-drawer unit)	42	Yes	Yes
Death – neck compression	57 (empty at time of incident)	27.5	Yes	Yes
Death – waist compression	57.5	39.5	Yes	Yes
Death – chest compression	66.5	33	Yes	Yes
Death – waist compression	68	30.8	Yes	Yes
Death – neck compression	68	30.8	Yes	Yes
Death – neck compression	68	30.8	Yes	Yes
Nonfatal Incidents				
Minor bruise under eye	28.5*	26.8	No	No
Bruising to both legs	31*	26	No	No
Scratches and bruises	31*	26	No	No
Laceration to cheek	39.7*	22.6	No	No
Laceration requiring 3 stitches	39.7*	22.6	No	No
Laceration to top of foot and a bruise to calf	45	28.1	Yes	Yes

* CPSC could not determine the weight of the CSU alone, so this is the package weight (*i.e.*, combined weight of the CSU and packing material), as listed on the manufacturer's website.

As Table 1 indicates, the lightest weight CSU involved in a fatal incident was 34 pounds. However, the configuration and weight of this CSU at the time of the incident is uncertain. The CSU was a 5-drawer unit, and at the time the incident was investigated, the three bottom drawers of the unit were not with the CSU; two of the drawers were in another room, and one was "disassembled" in a separate room. It is not clear whether these three drawers were installed at the time the unit tipped over and were moved out of the way after the incident, or if the drawers were removed at the time of the incident. With only the two drawers installed, the coroner's report indicates that the unit weighed 34 pounds. As such, CPSC does not know the total weight

of the CSU or its weight at the time of the incident. For this reason, CPSC did not use this incident to determine an appropriate weight limit for the rule.

The next lightest CSU involved in a fatal tip-over incident weighed 57 pounds. This unit was intact (*i.e.*, not missing drawers) and reportedly empty at the time of the incident, making the total weight 57 pounds. In this incident, the victim was laying on her back with the CSU on top of her neck between the CSU drawers. The CSUs in the remaining fatal incidents weighed more than 57 pounds. Three of the remaining victims were found with the CSU on their necks, and three were found with the CSU compressing their chests or waists. The mechanism for these injuries is the weight of the CSU and contents pressing against the victim's body, which provides further indication that the weight/mass of a CSU is a key factor in the potential occurrence and severity of injuries or death in a CSU tip over. As such, it is reasonable to account for CSU weight in determining the scope of the rule. Overall, these incidents indicate that the 57 pounds total weight is the lowest weight shown to result in a fatality during a CSU tip over.

As Table 1 and the NPR indicate, lighter weight units have been involved in nonfatal incidents. The lightest weight CSU involved in a nonfatal incident was 45 pounds; the lighter units would not meet the definition of a CSU because they are not 27 inches tall, but as noted, staff considered these incidents as a possible indication of the lowest weights that could result in injuries during a tip-over incident. However, none of these lighter-weight, nonfatal incident units resulted in serious injuries. All of the injuries were relatively minor, including bruising and lacerations. Staff also considered two incidents involving plastic units in the NEISS nonfatal data. Although the weight of these units was not reported, staff considered them because, as plastic units, they are likely to have been lightweight. In one incident, the unit tipped over, resulting in an unspecified head injury for which the child was treated and released, suggesting the injury was likely not serious. In the other incident, the unit caused a laceration to the right eye, which also resulted in the child being treated and released. Because of the nature of the

injuries in these nonfatal incidents, CPSC does not consider these incidents a good representation of the weight of CSUs that are likely to cause serious injuries or death in a tip-over incident. For this reason, the final rule relies on the lowest-weight unit involved in a fatal incident—57 pounds—because this indicates the lowest weight shown to pose a risk of serious injury or death.

Having identified an appropriate total weight at which to establish a threshold for the final rule, CPSC also considered how to determine the total weight. As explained, the 57-pound CSU involved in a fatal incident was empty at the time of the incident. Thus, its total weight at the time of the incident was 57 pounds. However, incident data indicate that for CSU tip-over incidents with a reported drawer fill, most involve partially or fully filled drawers (95 percent of fatal CPSRMS incidents and 90 percent of nonfatal CPSRMS incidents with reported drawer fill), and this use is expected because CSUs are intended to store clothing. As such, it is necessary to consider clothing fill weight, in addition to the empty weight of the CSU, when determining whether a CSU reaches the total weight of 57 pounds that poses a risk of severe injury or death. As discussed in this preamble, staff has determined that 8.5 pounds per cubic foot of functional storage volume represents a reasonable fill weight of clothing in CSUs. Consistent with this, the NPR explained that lightweight units that can reach the total weight, with clothing fill, that presents a hazard, need to be addressed in the rule. Therefore, the final rule uses this fill weight to determine whether a CSU can reach a total weight of 57 pounds and poses a risk of serious injury or death.

Effect of 57-pound criteria. To determine what effect this exclusion would have on units included in the scope of the rule and whether it would continue to address CSU tip-over incidents resulting in serious injury or death, staff assessed the filled weights of CSUs on the market and involved in incidents.

To assess units on the market, staff selected three lightweight CSUs, with a variety of designs (*i.e.*, number of drawers, configurations, and materials), all taller than 27 inches and weighing less than 30 pounds empty. Information about these units is shown in Table 2.

Table 2. Lightweight CSU Testing

Unit	Description	Dimensions (width, height, depth) (inches)	Empty Weight (pounds)	Calculated Drawer Fill Weight*(pounds)	Total Weight (pounds)
A	6 drawers in one column, plastic	33.75 x 48 x 15.5	16.0	53.4	69.5
B	8 drawers in 2 columns (4 drawers per column), cloth drawer, metal frame, wooden top	33.75 x 39.5 x 15.5	25.2	54.4	79.6
C	6 drawers arranged with 2 small drawers in the top row and 4 large drawers below in a single column, plastic	23.75 x 38.75 x 15.75	19.2	39.3	58.5

* Calculated using 8.5 pounds per cubic foot.

As Table 2 indicates, although all of these units weighed less than 30 pounds empty (which is the weight exclusion requested by commenters), they all weighed more than 57 pounds when filled with a reasonable clothing fill density. This demonstrates why it is necessary to consider the total filled weight of a CSU, and not the empty weight of a CSU, in establishing a weight threshold for the scope of the rule.

Staff also reviewed information about lightweight units on the market to determine the extent to which they would be excluded or included in the scope of the rule. Staff found that many lightweight units on the market are less than 27 inches tall and, as such, would not fall within the scope of the rule, regardless of their weight. Staff also noted that the lightest weight units in nonfatal tip-over incidents were almost all under 27 inches in height. Smaller units with lower capacities would be excluded from the scope of the rule. Overall, the number of

lightweight units that are 27 inches or taller and weigh less than 57 pounds when filled is small, making the impact of the rule similar to that proposed in the NPR.

To ensure that the tip-over hazard would still be sufficiently addressed, CPSC also assessed whether any CSUs involved in tip-over incidents would be excluded from the scope of the rule as a result of this weight criterion. Staff found that the 57-pound filled weight criterion would not exclude from the scope of the rule any CSUs that were involved in fatal CPSRMS incidents or nonfatal CPSRMS incidents that were not already excluded from the scope based on height.[81] As such, the weight criterion retains within the scope of the rule CSUs that have been demonstrated to and are likely to present the risk of serious injuries or death in a tip-over incident, while excluding units that are not likely to and have not been demonstrated to present the same risk.

f. Definition of Drawers

The final rule defines a "drawer" as a furniture component intended to contain or store items that slides horizontally in and out of the furniture case and may be attached to the case by some means, such as glides. This is the same as in the NPR. However, the final rule also adds to the definition an explanation that only components that are retained in the case when extended up to 2/3 the shortest internal length, when empty, are included in this definition.

As the language in the NPR and final rule indicates, drawers may be attached to the case, but do not have to be. CPSC received a comment on the NPR indicating that bins should be excluded from the definition of a drawer. CPSC agrees that features that extend from the case of a CSU contribute to instability differently depending on their retention within the case. An extended element contributes to a CSU's instability by shifting the CG of the CSU forward, and this contribution to instability increases when the extended element is filled with clothing. As

[81] Staff based their assessment on the available information, including reported product weights, identification, descriptions, and pictures. However, staff does not have details on all incident-involved units.

such, components that fall out of the case when extended will not shift the CG of the CSU forward because once the component falls out of the case, it is no longer part of the CSU and forces on it do not affect the CSU.

Staff examined how to distinguish between drawers and furniture components that are intended to contain or store items but are not usable as extendable elements that are likely to contribute to instability when extended. One way to capture attached and unattached components that can contribute to instability is provided in ANSI/BIFMA X6.5-2022, *Home Office and Occasional-Use Desk, Table and Storage Products*, which includes in the definition of "extendible element," "[e]xtendible elements have an outstop OR will remain in the drawer case/cabinet (in its normal use position) when it is extended up to ⅔ of its depth." Staff assessed this with CSUs with unattached extension features and found that for some units, these elements were retained within the case of the CSU when extended to 2/3 of their shortest internal length, which is the measurement used in the rule for drawer depth. Other such extension elements did not remain in the CSU case when extended to 2/3 of their depth. Staff found that the 2/3 extension criterion reasonably excludes components that are not usable as extendable elements and are unlikely to contribute to instability. Moreover, the 2/3 extension criterion aligns with the definition of "maximum extension" in the rule, which includes, "[i]f the manufacturer does not provide a recommended use position by way of a stop, [maximum extension] is ⅔ the shortest internal length of the drawer measured from the inside face of the drawer front to the inside face of the drawer back."

For these reasons, the definition of a "drawer" includes the clarification that the term includes components that are retained in the case when extended to 2/3 the shortest internal length, when empty. This retains the definition from the NPR, which includes components that are attached or unattached to the CSU case, while ensuring that the definition only captures those components that would contribute to instability, consistent with the purpose of the rule.

g. Definition of Freestanding

The final rule defines "freestanding" to mean that the unit remains upright, without needing attachment to the wall or other upright rigid structure, when it is fully assembled and empty, with all extendable elements and doors closed and specifies that built-in units are not considered freestanding. This definition remains the same as in the NPR, but with modifications to address comments and provide better clarity.

As discussed above, a CSU only includes freestanding products because the lack of permanent attachment to a building structure means that CSUs are susceptible to tip over, whereas built-in storage items are unlikely to pose a tip-over hazard. Examples of built-in/permanently attached items provided in the NPR were bathroom vanities and kitchen cabinets, which are typically permanently attached to walls and/or floors in a sufficiently secure manner to make it unlikely they will tip over. The NPR also explained that CSUs need to be inherently stable, rather than rely on tip restraints, because of various reasons tip restraints may not be used, installed properly, or be effective. The NPR also noted that how a manufacturer intends a product to be used/installed (*e.g.*, with tip restraints) is not determinative of whether it is a CSU because consumers will use products that function as CSUs as CSUs, regardless of marketing or manufacturer intent. As such, tip restraints and similar features, alone, would not make a unit non-freestanding.

However, CPSC received several comments seeking clarification of the term "freestanding," including the meaning of permanent attachment to the building structure, confusion about reference to a tip restraint, and specific items that may be permanently installed in a home. To address these comments, the final rule adds "other upright rigid structure" to possible attachments since any attachment to such a structure, not just to the wall, could render a unit non-freestanding; removes reference to tip restraints, since that was confusing to commenters; and removes the examples provided in the NPR. Kitchen cabinets and bathroom

vanities may have caused confusion as examples because they are unlikely to meet other criteria of the CSU definition (*e.g.*, use for clothing storage, sufficient closed storage).

These revisions retain the same meaning of "freestanding" as in the NPR and remain consistent with the purpose of including only freestanding items in the definition of a CSU by focusing on how consumers will foreseeably install and use products and whether they will be sufficiently attached to make them unlikely to tip over.

h. Definitions of Open Storage and Open Space

As described in the NPR, the definition of a CSU was developed, in part, based on consumer perceptions, as indicated during the CSU use study focus group[82] One of the design features of a CSU that staff identified was that a CSU has more closed storage than display storage (*e.g.*, storage behind glass doors) and other open storage (*e.g.*, cubbies), and/or open space (*e.g.*, space under legs). This is because consumers reported using CSUs to protect clothing, whereas they perceive glass doors as typically used to display items, making them unlikely to be used as CSUs. Researchers also found that legs and the bottom of a product are features consumers often consider when classifying something as a CSU. To address this, the final rule definition of a CSU includes, as one element, that the total closed storage functional volume is greater than 1.3 cubic feet and greater than the sum of the open storage functional volume and the open space volume.

The final rule defines "open storage" as the space within the frame of the furniture, that is open (*i.e.*, is not in a drawer or behind an opaque door) and that can be reasonably used for storage (*e.g.*, has a flat bottom surface) and provides, as examples, open shelf space that is not behind a door, display space behind a non-opaque door, and framed open clothing hanging space. In the NPR, this term was defined as "storage space enclosed on at least 5 sides by a

[82] See Tab Q of the NPR briefing package.

frame or panel(s) and/or behind a non-opaque door and with a flat bottom surface." The final rule defines "open space" as space within the frame of the furniture, but without a bottom surface and provides, as examples, open space between legs, such as with a console table, or between separated storage components, such as with a vanity or a desk. The definition of "open space" further specifies that it does not include space inside the furniture case (*e.g.*, space between a drawer and the case) or any other space that is not visible to a consumer standing in front of the unit (*e.g.*, space behind a base panel). The NPR defined "open space" as space enclosed within the frame, but without a bottom surface.

CPSC received a comment on the NPR requesting clarification of how to classify certain spaces within or around a furniture piece for purposes of determining "open storage" and "open space." To address this comment for "open storage," the final rule replaces "storage space enclosed on at least 5 sides by a frame or panel(s) and/or behind a non-opaque door" with "space within the frame of the furniture that is open (*i.e.*, is not in a drawer or behind an opaque door)." These descriptions convey the same meaning but address the confusion expressed by the commenter. The final rule also replaces "with a flat bottom surface" with "reasonably can be used for storage (*e.g.*, has a flat bottom surface)" based on a comment that open storage may not have a flat bottom surface. The definition now also includes examples, based on descriptions and examples in the NPR and from the commenter. Overall, this definition remains consistent with the NPR and aligns with that of "closed storage" in the rule.

To address the comment for "open space," the final rule slightly modifies wording and adds examples, consistent with the description in the NPR. The modification includes changing "under legs" to "open space between legs," based on the commenter's suggestion. The definition also adds that "open space" does not include space inside the furniture case or space that is not visible to a consumer (with examples), which is consistent with the purpose of aligning the CSU definition with consumer perceptions.

B. Stability Requirements[83]

1. Final Rule Requirements

The requirements for stability of CSUs consist of configuring the CSU for testing, performing testing using a prescribed procedure, and determining whether the performance results comply with the criteria for passing the standard. There are several terms used in the stability requirements that are defined in the standard.

To configure the CSU for testing, the rule requires the CSU to be placed on a hard, level, flat surface in the orientation most likely to cause a tip over. If the CSU has levelling devices, the devices are adjusted to the lowest level and then according to the manufacturer's instructions. The CSU is then tipped forward using a test block that is at least 0.43 inches thick to simulate carpet. All doors, drawers, and pull-out shelves that are not locked by an interlock that withstood interlock testing (see below) are then open to the least stable configuration and fill weights are placed in drawers and pull-out shelves, depending on the proportion of drawers and pull-out shelves that are open. Because the test configuration differs, depending on the presence and effectiveness of interlocks, the rule requires testing the interlocks before conducting the stability testing.

The interlock testing consists of placing the CSU on a hard, level, flat surface; levelling to the lowest level and then according to manufacturer instructions; securing the unit to prevent sliding or tip over; and opening the number of doors, drawers, or pull-out shelves necessary to engage the interlock. A 30-pound horizontal pull force is then applied at the center of the pull area on each interlocked door, drawer, or pull-out shelf, one at a time, over a period of 5 seconds, and held for at least 10 seconds. This pull test is repeated until all possible combinations of doors, drawers, and pull-out shelves have been tested. If any interlocked door, drawer, or pull-

[83] For additional information about the stability requirements in the rule, including interlock testing and relevant definitions, see Tabs C and D of the NPR and final rule briefing packages.

out shelf opens without retracting the originally open element, or the interlock is damaged or does not function as intended during this testing, then the interlock is to be disabled or bypassed for the stability testing. In general, when interlocks are provided, they must be pre-installed and automatically engage as part of normal use.

For the stability testing, all doors, drawers, and pull-out shelves that are not locked by an interlock meeting the requirements of the interlock test are open to the maximum extension (as defined in the standard), in the configuration most likely to cause a tip over (typically the largest drawers in the highest position open). If 50 percent or more of the drawers and pull-out shelves by functional volume are open, a fill weight is placed in the center of each drawer or pull-out shelf, including those that remain closed. The fill weight of 8.5 pounds per cubic foot times the functional volume (cubic feet) is the minimum permitted in open drawers and pull-out shelves, and the maximum permitted in closed elements. If less than 50 percent of the drawers and pull-out shelves by functional volume are open, no fill weight is placed in any drawers or pull-out shelves.

The rule provides two test methods for the tip-over test. Test Method 1 must be used for CSUs with drawers or pull-out shelves that extend at least 6 inches from the fulcrum. It involves applying weights to the face of one or more extended drawers or pull-out shelves to cause the unit to tip over. At that point, the tip-over moment of the unit is calculated by multiplying the tip-over force (as defined in the standard) by the horizontal distance from the center of force application to the fulcrum (as defined in the standard).

Test Method 2 must be used for any CSU for which Test Method 1 does not apply. It involves applying a horizontal force to the CSU orthogonal (*i.e.*, at a right angle) to the fulcrum to cause the unit to tip over. The tip-over moment is then calculated by multiplying the tip-over force by the vertical distance from the force application point to the fulcrum.

If a failed component prevents the completion of either test method, then to continue testing, the failed components must be repaired or replaced to their original specifications and, if necessary, be secured to prevent the components from failing, as long as the modifications do not increase the tip-over moment.

Once the tip-over moment for the CSU has been determined, that value must be greater than several comparison moments, as applicable, depending on the design of the CSU. The first comparison moment applies to CSUs with drawers or pull-out shelves and is 55.3 pounds times the drawer or pull-out shelf extension from the fulcrum distance (as defined in the standard, in feet), plus 26.6 pounds feet. The second comparison moment is for units with doors and is 51.2 pounds times the door extension from fulcrum distance (as defined in the standard, in feet), minus 12.8 pounds feet. The third comparison moment applies to all CSUs and is 17.2 pounds times the maximum handhold height (as defined in the standard, in feet). The greatest of these three comparison tip-over moments is considered the threshold moment, which the tested CSU's tip-over moment must exceed.

2. Basis for Final Rule Requirements

As described in this preamble and the NPR, there are several factors that are commonly involved in CSU tip-over incidents that contribute to the instability of CSUs, and a number of these factors often occur simultaneously. These include multiple open and filled drawers or pull-out shelves, carpeting, and forces generated by children's interactions with the CSU (such as climbing and opening/pulling on drawers). The rule includes requirements to simulate or account for all of these factors, in order to accurately assess the stability of CSUs during real-world use.

The stability testing in the rule simulates these factors simultaneously (*e.g.*, all drawers and pull-out shelves open and filled, on carpet, and accounting for child interaction forces). This is because incident data indicate that these factors commonly exist at the same time. For example, incidents include children climbing on open drawers, filled with clothing.

This section discusses the basis for the stability requirements in the final rule as well as the definitions of terms relevant to those requirements. Based on comments received in response to the NPR, the final rule includes revisions to the stability requirements and relevant definitions. Accordingly, this section also notes the provisions and relevant definitions that have been revised and discusses the comments and justifications for those revisions.

a. Definitions

This section discusses definitions that are relevant to stability testing that have been revised or added since the NPR to address comments submitted on the NPR and staff's assessments. Additional terms that are defined in the rule are addressed in the discussion of the stability requirements, below.

Door extension from fulcrum distance. The NPR specified that, for purposes of determining the doors extension from fulcrum distance, the door was to be "in a position where the center of mass of the door is extended furthest from the front face of the unit" and that this is "typically 90 degrees." As the NPR explained, all doors and extendable elements should be open to the maximum extension and least stable configuration for stability testing because this is consistent with the purpose of the testing provisions to assess CSUs in their least stable likely configuration during real-world use. CPSC received comments regarding the same wording in the stability requirements on how to open doors for testing; the comments indicated that testers misunderstood the requirement to mean that they must measure the CM of the door to determine what position to which to open it. To clarify the meaning of this provision, the final rule states that the door is to be in the least stable configuration, which is typically 90 degrees. This accomplishes the same purpose as the NPR provision, but should eliminate confusion on how to configure the door, and make clear that testers need not measure the CM of the door.

Extendable elements. The proposed rule included numerous requirements for "drawers and pull-out shelves" and those terms are both defined in the rule. Several furniture-related

voluntary standards use the term "extendable element" to refer to drawers and pull-out shelves. Because the term "extendable element" has the same meaning as "drawers and pull-out shelves," but is more concise and does not diminish understanding, the final rule replaces references to "drawers and pull-out shelves" with "extendable elements." This does not change any requirements in the rule.

Fulcrum. Intuitively, the fulcrum is located at the front of the bottom-most surface of the CSU. This is the point or line about which the CSU pivots when it tips forward. Therefore, the rule defines the fulcrum as the bottom point or line of the CSU touching the ground about which the CSU pivots when a tip-over force is applied. The fulcrum is typically located at the line connecting the front feet. However, for CSUs without feet, or for CSUs with an atypical pattern of feet, the fulcrum may be in a different location. Some CSUs may have multiple fulcrums that will vary, depending on the direction the tip-over force is applied. The fulcrum that results in the smallest tip-over moment should be determined.

The proposed rule defined "fulcrum" as, "the point or line at the base of the CSU about which the CSU pivots when a tip-over force is applied (typically the front feet)." The fulcrum position is used in four measurements within the stability requirements. The first is the *extendable element extension from fulcrum distance* and the second is the *door extension from fulcrum distance*. Both of these distance measurements are used to determine the threshold moment, which establishes the minimum stability requirement of the CSU. The third and fourth measurements for which the fulcrum position is used are to determine the tip-over moment in Test Methods 1 and 2, which determine whether the CSU meets the minimum stability requirement.

CPSC received several comments relating to consistent measurements to the fulcrum, some of which sought clarity on when to determine the fulcrum position. It is possible that the fulcrum position may shift forward as a CSU tilts or pivots forward during the test. For most

CSUs, this positional shift is small and does not have a significant effect on measurements to the fulcrum. However, some CSUs may extend the fulcrum forward significantly while they are tilting forward. Depending on when certain measurements to the fulcrum are made, a forward-shifted fulcrum could either result in a smaller threshold moment (making the test easier to pass) or in a reduced moment arm for the tip-over moment (making the test more difficult to pass). For this reason, the fulcrum position should be determined before a tip-over force is applied since the fulcrum position is used as a reference point for several measurements. Based on comments, this was not clear in the NPR. Because a lack of clarity on this could lead to potential inconsistencies in measurement, the final rule revisions to make clear at what point to determine the fulcrum and at what stage of the stability test measurements to the fulcrum are to be made. Specifically, the fulcrum definition is revised to indicate that the fulcrum position is determined while the CSU is on a hard, level, flat test surface with all doors and extendable elements closed. This establishes a clear reference that can be used at any stage of testing, making the stability test repeatable and reproducible. In addition, Test Method 1 and Test Method 2 specify that the appropriate time to record the distance measurement to the fulcrum is before the load is applied.

Another commenter asked what distance to use for determining the fulcrum for CSUs with drawers that extend to different lengths. The NPR regulatory text depicted in a figure a CSU with drawers extended to different lengths, and showed the drawer extension from fulcrum distance measured to the drawer with the longest extension. However, the comment suggests that may not be sufficiently explicit. Lack of clarity on this issue could lead to potential inconsistencies in measurement. To address this, the final rule adds to the stability test configuration requirements that, after the CSU has been leveled, to record the maximum handhold height and the longest extendable element extension from fulcrum distance and door extension from fulcrum distance, as applicable. This establishes a clear time when the appropriate measurements are to be taken, and makes clear that the longest extendable element

extension from fulcrum distance is to be used, without relying on figures to express the intended measurement.

Interlock. In the NPR, "interlock" was defined as "a device that restricts simultaneous opening of drawers. An interlock may allow only one drawer to open at a time, or may allow more than one drawer, but fewer than all the drawers, to open simultaneously." The rule addresses interlocks because they are an option for increasing the stability of a CSU by decreasing the mass that can be opened from the case of the CSU simultaneously. As such, the rule includes testing provisions that accommodate these features and assess the strength of these features to ensure they function during real-world use conditions.

One manufacturer commented that the definition should account for the fact that interlocks are not limited to drawers and could also be used for pull-out shelves and doors. Doors and extendable elements all extend from the case of a CSU, shifting the CG of the unit outward, thereby making the CSU less stable. As such, interlocks, which restrict the extension of any such extended elements, could be used to improve CSU stability, and it is important that the rule allow for these features for design flexibility and ensure that interlocks are strong enough to function as intended under real-world use conditions. Although the NPR did not explicitly include pull-out shelves and doors in the requirements regarding interlocks, the NPR did indicate that the purpose of the interlock requirements in the NPR was to ensure interlocks function effectively and are accommodated in the test requirements and that other similar standards that address interlock integrity apply to all extendable elements. To address these comments and provide design flexibility, the final rule includes doors and pull-out shelves in the definition of an "interlock" and adds these features to provisions regarding interlocks.

A commenter also stated that the second sentence of the definition in the NPR was unnecessary as it did not add to the explanation. Because the first sentence of the definition provides sufficient explanation of the term and the requirements in the standard address

interlocks that do not affect all extendable elements, the final rule removes the second sentence from the NPR definition. Another commenter requested that the term "device" be changed to "feature" to provide as much design flexibility as possible. Although CPSC does not believe this wording change affects the scope of products that meet the definition of an "interlock," the final rule uses "feature" to address this comment and ensure adequate clarity about the range of features that can serve as an interlock.

Maximum handhold height. In the NPR, maximum handhold height was defined as "the highest position at which a child may grab hold of the CSU. This includes the top of the CSU. This height is limited to a maximum of 4.12 feet from the ground, while the CSU is on a flat and level surface." The definition also included a reference to a figure, which indicated a maximum height of 4.12 feet.

CPSC received a comment on the NPR, asking to add to this definition that it is "a handhold feature at or below 4.12 ft," which suggests that the commenter misunderstood the definition in the NPR. The maximum handhold height includes the top of the CSU, but is limited to a maximum of 4.12 feet from the ground, which is based on the overhead reach height for a 95th percentile 3-year-old male.[84] Therefore, the maximum handhold height is either: (1) the height of the unit, if the unit is under 4.12 feet tall, or (2) 4.12 feet if the unit is that tall or taller. Because the comment suggests some potential for misunderstanding this, the final rule rewords the definition to make this clear, as "Maximum handhold height means the highest position at which a child may grab hold of the CSU, measured while the CSU is on a hard, level, and flat test surface. For units shorter than 4.12 feet, this is the top of the CSU. For units 4.12 feet or taller, this is 4.12 feet." The final rule also includes a revised figure to illustrate this.

[84] See Tab C of the NPR briefing package.

Test block. To replicate the effects of carpet during stability testing, the NPR proposed to require that the CSU be tilted forward 1.5 degrees during testing by raising the rear of the unit, placing the CSU on an inclined surface, or using other means. The NPR explained the testing used to determine that 1.5 degrees was the average angle that replicates the effect of carpet (see discussion of tip angle below).

CPSC received several comments recommending that a test block be used to achieve an appropriate angle, rather than specifying an angle, to make the test easier to conduct, aid repeatability and reproducibility, and because tilt angle could be affected by CSU attributes such as weight or depth. A manufacturer recommended that a 0.43-inch-thick test block would achieve the same purpose as the test angle in the NPR. To evaluate whether a test block could achieve a comparable tilt angle to that determined to simulate the effect of carpet, staff assessed the tilt angle that a 0.43-inch-thick test block would produce on most CSUs. Staff used the depth measurements for CSUs that were previously identified by staff[85] and calculated the angle that would be produced by raising the rear of the CSU 0.43 inches.[86] Staff determined that raising the rear of the CSU 0.43 inches tilted the CSU forward at an average angle of 1.5 degrees. The total range of angles produced by this test block was 1.2 degrees to 2.3 degrees, which is within the range of angles staff previously determined simulated the effect of carpet, which was 0.8 degrees to 3.0 degrees.

Based on this assessment, using a 0.43 inch test block would provide an equivalent tilt angle to that in the NPR and adequately simulate the effect of carpet. In addition, using a test block would be easier than tilting the unit forward 1.5 degrees because it is easier for a test lab to

[85] See Tab N of the NPR briefing package.
[86] Staff reduced the measured depth by 1 inch for this calculation to account for feet placement. The depth of these units was measured at the top surface, and staff estimates the feet are inset at least 1 inch total from the top, on average. Because a test block would be placed under the feet of a CSU, staff adjusted the depth measurement accordingly.

create test blocks of a specific thickness than to create multiple blocks for individual units that will raise them 1.5 degrees, or to create a test platform that angles exactly 1.5 degrees. For these reasons, the final rule revises the tilt requirement and adds a definition of "test block" that states it is "a block constructed of a rigid material such as steel or aluminum with the following minimum dimensions: at least 0.43 inch thick, at least 1 inch deep, at least 1 inch wide." The final rule also includes a figure illustrating these dimensions. The final rule also updates the figures in the stability requirements to show the test block.

To ensure that a test block properly simulates the effect of carpet, the positioning of the block is important to achieve the correct angle. A block positioned too far toward the front of the CSU will increase the angle; a block positioned too far toward the rear of the CSU will decrease the angle. Therefore, to accommodate the requested change to a test block, the position of the block must be specified. For CSUs that have rear feet with glides or levelers smaller than the block, the entire glide or leveler should be over the block. Otherwise, the back of the block can be easily aligned with the back edge of the rear support. To ensure proper placement of the test block, the test configuration requirements are also updated in the final rule to state: "Tilt the unit forward by placing the test block(s) under the unit's most rear floor support(s) such that either the entire floor support contact area is over the test block(s) or the back edge of the test block(s) is aligned with the back edge of the rear floor supports."

Tip over. The NPR defined "tip over" as "the point at which a clothing storage unit pivots forward such that the rear feet or, if there are no feet, the edge of the CSU lifts at least ¼ inch from the floor and/or is supported by a non-support element."

CPSC received several comments on this definition including that it does not allow for new designs that may intentionally use extension elements to stabilize the CSU; that one side of a CSU may lift from the floor before the other side; and that it is difficult to measure ¼ inch during testing. Commenters suggested using a definition like that in voluntary standards, such as

an "event at which a furniture unit pivots forward to the point at which the unit continues to fall" or "the condition where the unrestricted unit will not return to its normal upright position."

As explained in the NPR, the definition of "tip over" in the NPR was based on staff's assessments and its utility for purposes of testing. However, based on these comments, staff reassessed the ¼ inch criterion and found that for most CSUs, the tip-over force, when measured with a force gauge, is determined immediately as the rear of the CSU lifts off the ground, before the rear of the CSU lifts at least ¼ inch off the ground, but for other CSUs, when measuring the tip-over force using weights, the rear may rise up to ¼ inch or more, but remain balanced. To address this and the comments, the final rule revises the definition of "tip over" to mean "an event at which a clothing storage unit pivots forward to the point at which the CSU will continue to fall and/or be supported by a non-support element," which is similar to the commenters' suggested revisions.

This change allows the "tip over" assessment to be made without the CSU continuously falling forward and without simultaneous measurements of the tip-over force and the height that the rear of the CSU lifts. This also allows tip-over force measurements to be determined with weights, without potential confusion caused by the CSU balancing with the rear of the CSU raised. Additionally, the tip-over force measured with a force gauge is typically determined as the rear of the CSU lifts off the ground, before it reaches the ¼ inch height proposed in the NPR, and this change allows testers to make that determination, as appropriate. In addition, this revision allows for design flexibility, including features that prevent tip over but may permit the unit to lift ¼ inch from the floor. This change may, in some instances, result in tip-over forces being slightly higher when measured with weights, but is not expected to affect tip-over forces when measured with a force gauge and such slight increases are not expected to significantly affect stability test results.

b. Requirements for Interlocks

Because the fill level, as well as the stability of a CSU, depends on how many doors and extendable elements can open, the standard also includes a requirement that any interlock system must withstand a 30-pound horizontal pull force. Without such a requirement, consumers may disengage the interlock, or the interlock may break, resulting in more filled drawers being open during real-world use, and less stability, than assessed during stability testing.

General requirement. The NPR specified that for CSUs with interlocks, the interlocks must be pre-installed, automatically engage when the consumer installs the drawers in the unit, and must engage automatically as part of normal use. CPSC received a comment that misinterpreted this requirement to mean that CSUs are required to have interlocks. Although the NPR clearly indicated that interlocks are not required, the final rule clarifies this by adding to the interlock provisions that they only apply to CSUs with interlocks.

Configuration. For the interlock pull test, the NPR stated that the CSU was to be secured to prevent sliding or tip over. This is because the unit must remain stable to accurately assess the integrity of the interlock system. CPSC received a comment recommending that this provision specify that the CSU is to be secured without interfering with the interlock function. The purpose of this provision is to assess the strength of the interlock system and its ability to remain fully functional and effective during real-world use conditions. As such, the preliminary step of securing the unit from sliding or tip over clearly should not be done in a way that interferes with the effectiveness of the interlock. To ensure this is clear, the final rule adds that securing the CSU must not interfere with the interlock function.

The NPR also stated to adjust a levelling device to the lowest level and then in accordance with the manufacturer's instructions, for interlock testing. The purpose of this requirement is to ensure that the CSU is level for testing and is consistent with configuring the unit in accordance with manufacturer instructions. However, CPSC recognizes that CSUs may

have more than one levelling device. To ensure this levelling is performed for all levelling devices on a CSU, which is consistent with the purpose in this NPR, this wording has been revised to include multiple levelling devices.

Interlock testing. Staff assessed the pull strength of children to determine an appropriate pull force requirement for the interlock test (and the comparison moment for pulling open a CSU), and found that the mean pulling strength of 2- to 5-year-old children on a convex knob (diameter 40 mm) at their elbow height is 59.65 Newton (13.4 pound-force) for males and 76.43 Newton (17.2 pound-force) for females.[87] In the study from which staff drew these values, participants were asked to exert their maximum strength at all times, described as the highest force they could exert without causing injury. Participants were instructed to build up to their maximum strength in the first few seconds, and to maintain maximum strength for an additional few seconds. Participants were instructed to use their dominant hand. Based on this, children between 2 and 5 years old can achieve a mean pull force of 17.2 pounds. ANSI/BIFMA X6.5-22 includes a higher horizontal pull force of 30-pounds in its stability requirements. To ensure that the rule adequately assesses the integrity of interlock systems, the rule includes a 30-pound horizontal pull force.

CPSC received a comment seeking clarity on where the force should be applied. The pull area is where a person would typically interact with or pull on the extendable element or door. Because the test requirements in the rule are intended to simulate real-world use conditions, the typical interaction area is a reasonable location to apply the force. A pull force test is typically applied where a pull (such as a knob, bar, handle, or other handhold) is already present; however, for long pulls or multiple pulls, it may not be clear where the pull force should be applied. Elements with multiple pulls or long continuous pulls should be tested an equal number of times

[87] DTI (2000). Strength Data for Design Safety – Phase 1 (DTI/URN 00/1070). London: Department of Trade and Industry.

as units with a single pull, rather than testing such units multiple times with each pull feature. The location where the pull force is applied may affect the outcome of the test, making it important that this force be applied consistently by testers. To address the comment, provide clarity, and ensure reliable test results, the final rule specifies that the pull force is to be applied "at the center of the pull area." For elements with more than one pull area on a single extendable element or door (*e.g.*, 2 knobs on a single drawer), the center of the pull areas would typically mean at a knob, midway between two knobs, or at the center of a bar, handle, or other handhold and testers could determine how to apply the force to the center, such as by connecting them with rope or wire.

Performance criteria. The NPR specified that, if during interlock testing, a locked drawer opens or the interlock is damaged, then the interlock must be disabled or bypassed for stability testing. CPSC has become aware of interlocks which, rather than locking an extendable element in the case, instead allow the extendable element to extend while retracting already extended elements. These features restrict simultaneous extension of extendable elements, which addresses the hazard of multiple open drawers. The purpose of this requirement in the NPR was that, if the interlock does not function as intended or cannot withstand the real-world use conditions in the test, it should not be used during stability testing because it cannot be relied on to provide added stability for the CSU during real-world use. Consistent with this purpose and to provide design flexibility, the final rule has been modified to address the newly identified interlock type, such that it is also permissible as long as it withstands the required testing.

c. Stability Testing Configuration

Assembly. The test configuration provisions in the NPR required testers to assemble the unit according to the manufacturer's instructions. CPSC received a comment on the NPR seeking clarification of what this means for CSUs where the manufacturer's instructions direct consumers to attach the unit to the wall. As the NPR emphasized, the rule is intended to address

the inherent stability of CSUs, without attachment to the wall, because staff's data and analysis (in Tab C of the NPR briefing package) demonstrated that consumers do not commonly attach CSUs to the wall and, even if they do, the attachment may not be effective or installed correctly. Consistent with this purpose and to clarify this requirement, the final rule adds that the unit must not be attached to the wall or other upright structure for testing. This will ensure CSUs are tested for inherent stability.

Orientation on test surface. The NPR proposed to require that testing occur on a hard, level, flat test surface, which the NPR defined as sufficiently hard to not bend or break under the weight of the CSU and testing loads, smooth and even, and with no more than 0.5 degrees of variation. CPSC received comments that the angle of the test surface is critical to the test and a test laboratory determined that the allowable tolerance on the test surface could result in a 4 percent overestimate or a 3 percent underestimate from the nominal test result. The final rule retains the definition of a "hard, level, and flat test surface" that was in the NPR, but adds to the stability test configuration requirements that, in placing the CSU on this surface, it must be placed in the orientation most likely to cause tip over. This is consistent with the aim stated in the NPR of generally testing CSUs in their least stable configurations to best ensure that stability testing assesses real-world worst-case conditions. This revision will address the possibility of overestimating stability by not allowing the CSU to be placed in a more stable orientation than level.

CPSC also received a comment that a CSU can slide during the stability test and affect test results. To address this, the final rule adds to the test configuration requirements that, if necessary, testers may secure the unit from sliding. Testers could prevent a unit from sliding using high friction surfaces or specially designed blocks, among other options. However, the addition also specifies that such securement must not prevent the CSU from tipping over. It is implicit in stability testing requirements that the unit should not be secured from tipping over

during testing, as that would defeat the purpose of the testing. Thus, while securement may be appropriate to facilitate testing, it must not interfere with the accuracy of the stability assessment. The additional wording clarifies that testers may secure the unit from sliding, but remains consistent with the proposed configuration and the purpose of stability testing by making clear that such securement must not prevent the CSU from tipping over.

Leveling. Like for interlock testing, the NPR stated to adjust a levelling device to the lowest level and then in accordance with the manufacturer's instructions, for stability testing. As explained above, the purpose of this requirement is to ensure that the CSU is level for testing and is consistent with configuring the unit in accordance with manufacturer instructions. However, CPSC recognizes that CSUs may have more than one levelling device. To ensure this levelling is performed for all levelling devices on a CSU, which is consistent with the purpose in this NPR, this wording has been revised to include multiple levelling devices for the stability testing configuration as well.

In addition, for stability testing after configuring the CSU according to manufacturer instructions, leveling it, and tilting it to simulate carpet, the NPR further stated that, if the CSU has a levelling device intended for a carpeted surface, to adjust the level in accordance with the manufacturer's instructions for a carpeted surface. CPSC received several comments that allowing levelling devices to be adjusted for a carpeted surface would allow CSUs to be tested in a more stable position, although consumers may not make these levelling adjustments at home. As the NPR explains, the purpose of the rule is to assess the stability of CSUs under real-world use conditions that contribute to instability. This includes testing CSUs on a surface that simulates the effect of carpeting because carpet is shown to be associated with increased instability. This also includes accounting for real-world conditions, such as consumers not leveling for carpet. Therefore, consistent with the purpose of the NPR and in consideration of

these comments, the final rule does not include the direction to adjust the level for a carpeted surface in the stability test.

Carpeting. As incident data indicate, of the fatal CPSRMS tip-over incidents involving children and only CSUs that reported the type of flooring under the CSU, 81 percent involved carpeting. Of the incidents that provided photos, the carpet was typical wall-to-wall carpet, with most being cut pile, and a few being looped pile. Of the nonfatal CPSRMS tip-over incidents involving children and only CSUs that reported the type of flooring, 74 percent involved carpeting. Thus, for incidents where flooring type was reported, carpet was by far the most prevalent flooring type.

As discussed earlier, staff testing showed that CSUs with a variety of designs and stability levels were more stable on a hard flooring surface than they were on carpeting. Consistent with incident data, staff used wall-to-wall carpet for this testing and tested the CSU stability with various configurations of open and filled drawers. For 94 percent of the comparison weights (including multiple variations of open and filled drawers), the units were more stable on the hard surface than on carpet, with a mean difference in tip weight of 7.6 pounds.

Therefore, based on incident data and testing, CSUs are commonly on carpet during CSU tip-over incidents, and carpet increases the instability of the CSU. Accordingly, the rule includes a requirement that simulates the effect of carpet in order to accurately mimic real-world factors that contribute to CSU instability. To determine how to simulate the effect of carpet, section **VII. Technical Analysis Supporting the Rule** explains that staff compared the tip weights of CSUs on carpet with the tip weights for the same units when tilted forward to various degrees on a hard, level, flat surface. Staff found that the tip weight of CSUs on carpet corresponded with tilting the CSUs forward 0.8 to 3 degrees, depending on the CSU, with the mean tilt angle that corresponded to the CSU tip weights on carpet being 1.48 degrees. Therefore, a forward tilt of

1.5 degrees replicates the effect of carpet on CSU stability, and this was included in the CSU configuration requirements for the stability testing in the NPR.

However, as discussed above (see discussion of "test block" definition), comments on the NPR indicated that requiring a test block that created a comparable angle to that in the NPR and equivalently simulated the effect of carpet was preferable to specifying an angle because it would make the test easier to conduct, aid repeatability and reproducibility, and because tilt angle could be affected by CSU attributes such as weight or depth. In addition, using a test block would be easier than tilting the unit forward 1.5 degrees because it is easier for a test lab to create test blocks of a specific thickness than to create multiple blocks for individual units that will raise them 1.5 degrees, or to create a test platform that angles exactly 1.5 degrees. To address this, staff assessed what height test block would provide a comparable requirement to the 1.5 degrees proposed in the NPR and determined that a 0.43-inch-thick test block would provide an equivalent tilt angle to that in the NPR and adequately simulate the effect of carpet. Accordingly, the final rule replaces the test angle with a test block of specified dimensions and require specific placement of that block to ensure they achieve the correct angle.

Multiple open and filled extendable elements. As incident data indicate, opening extendable elements of a CSU was a common interaction in CSU tip overs involving children and only a CSU. It was the most common reported interaction (54 percent) in nonfatal CPSRMS incidents; it was the second most common reported interaction (8 percent) in nonfatal NEISS incidents; and it was the third most common reported interaction (8 percent) in fatal CPSRMS incidents. Children as young as 11 months were involved in incidents where the child was opening one or more extendable elements of the CSU, and the incidents commonly involved 2- and 3-year-olds. In numerous incidents, the children opened multiple or all of the extendable elements. The youngest child reported to have opened all extendable elements was 13 months old.

The incident analysis also indicates that, of the CSU tip overs involving children and only CSUs for which the reports indicated the contents of the CSU, 95 percent of fatal CPSRMS incidents involved partially filled or full extendable elements; and 90 percent of the nonfatal CPSRMS incidents involved partially filled or full extendable elements. Most items in the extendable elements were clothing.

As this preamble explains, opening doors or extendable elements (*i.e.*, drawers or pull-out shelves) shifts the CG towards the front of the CSU, and the closer the CG is to the front leg, the easier it is to tip forward if a force is applied to the extended element. Therefore, CSUs will tip more easily as more extendable elements are opened. The CG of a CSU will also change depending on the position and amount of clothing in each drawer or pull-out shelf. Closed extendable elements filled with clothing tend to stabilize a CSU, but as each filled extendable element is pulled out, the CG of the CSU will further shift towards the front. Staff's testing demonstrates this principle, finding that multiple open drawers decrease the stability of a CSU, and filled drawers further decrease stability when more than half of the drawers by volume are open, but increase stability when more than half of the drawers by volume are closed.

Taken together, this information indicates that children commonly open multiple filled drawers simultaneously during CSU tip-over incidents, and that doing so decreases the stability of the CSU if half or more of the drawers by volume are open. Accordingly, the rule includes multiple open and filled extendable elements as part of the unit configuration for stability testing, and varies whether extendable elements are filled depending on how many of the extendable elements can open, as determined by an interlock system.

As staff testing showed, when all CSU extendable elements are pulled out and filled, the unit is more unstable. However, when CSU extendable elements have interlocks or other means that prevent more than half of the extendable elements by volume from being pulled out simultaneously, the CSU tips more easily with all extendable elements empty. Accordingly,

when an interlock or other means prevents more than half of the extendable elements by interior volume from being opened simultaneously, the rule requires that no fill weight be placed in the extendable elements.

The rule requires that extendable elements be opened to the maximum extension for both interlock testing and stability testing, and defines "maximum extension." The purpose of these requirements is that all extendable elements are opened fully, or if there is an interlock, the worst-case extendable elements that can be opened at the same time are opened fully. Maximum extension for extendable elements is the furthest manufacturer recommended use position, as indicated by way of a stop; if there are multiple stops, they are open to the stop that allows the furthest extension; if there is no stop, they are open to 2/3 of the shortest internal length of the extendable element.

Open doors. The stability testing provisions also require that all doors be opened. Incident data indicates that, although there are fewer incidents involving CSUs with doors than extendable elements, children are able to open doors and there are fatal and nonfatal incidents involving wardrobes and armoires, which include doors. Based on these incidents and children's capabilities and climbing behavior demonstrated in incidents, the rule also includes opening all doors to simulate the least stable configuration of these units. Children may put their body weight on open doors or on extendable elements behind doors, both of which would contribute to instability in the same way as open extendable elements.

The NPR specified that doors were to be open outward or downward to the position where the CM of the door is extended furthest from the front face of the unit, which is typically 90 degrees. As the NPR explained, all doors and extendable elements should be open to the maximum extension and least stable configuration for stability testing, as this is consistent with the purpose of these testing provisions to assess CSUs in their least stable likely configuration during real-world use. CPSC received comments requesting that the test provisions be simplified,

and staff identified the door position requirement as a potential point of confusion that could be simplified. To clarify and simplify the meaning of this requirement, the final rule states to open all hinged doors that open outward or downward to the least stable configuration, which is typically 90 degrees. This accomplishes the same purpose as the NPR provision, but should eliminate confusion on how to comply, and make clear that testers need not measure the CM of the door.

Fill density. As discussed in section **VII. Technical Analysis Supporting the Rule**, staff assessed the appropriate method for simulating CSU drawers that are partially filled or fully filled.[88] Using three drawer sizes, staff was able to fit 8.5 pounds per cubic foot of unfolded and folded clothing fill in the drawers and this fill level still allowed the drawers to close. The maximum unfolded clothing fill density ranged from 8.56 to 8.87 pounds per cubic foot, depending on the drawer; and the maximum folded clothing fill density ranged from 9.40 to 10.16 pounds per cubic foot, depending on the drawer. Staff considers it unlikely that consumers will fill a drawer to the maximum levels staff identified (exceeding 8.5 pounds per cubic foot) because it requires careful folding, and it is difficult to remove and replace individual pieces of clothing. Therefore, CPSC considers 8.5 pounds per cubic foot of functional drawer volume a reasonable approximation of the weight of clothing in a fully filled drawer. Because CSUs are reasonably likely to be used to store clothing, and incident data indicates that CSUs involved in tip-over incidents commonly include drawers filled with clothing, the rule requires 8.5 pounds per cubic foot as fill weight when more than half of the drawers by volume are open.

As discussed above, staff assessed whether the same fill weight is appropriate for pull-out shelves and found that pull-out shelves can hold the same volume of clothing as drawers and still

[88] See Tab L of the NPR briefing package.

remain fully functional and sufficiently contain the clothing content during moving of the shelf. Accordingly, the same fill weight applies to drawers and pull-out shelves.[89]

The NPR specified that fill weights must consist of "a uniformly distributed mass that is 8.5 (pounds/cubic feet) times the functional volume (cubic feet)." The NPR did not specify a tolerance for the fill weight density. CPSC received comments stating that achieving precisely 8.5 pounds per cubic feet of functional volume would depend on the accuracy and precision of measurement instruments, which may affect stability results, decreasing a CSU's stability rating by as much as 3 percent to 6 percent. Accordingly, commenters recommended providing a tolerance for the fill weight density. To address these comments, the final rule specifies that the 8.5 pounds per cubic feet density is the minimum for open extendable elements and a maximum for closed extendable elements. This is because, as explained in the NPR, fill weight in closed extendable elements contributes to stability and fill weight in open extendable elements contribute to instability. Because the goal of the stability testing is to simulate the least stable likely configuration during real-world use of a CSU, the tolerance allows for heavier loads in open drawers, but not in closed drawers.

The NPR also specified that fill weights were to be placed in the center of the extendable element, meaning the center of the storage space. CPSC received comments requesting clarification and more specificity on where to place the fill weights, indicating that the position could be a source of testing error. Based on these comments, the final rule specifies that the fill weights are to be placed in the center of the bottom surface of the extendable element. This is consistent with the direction in the NPR and the general approach of determining the volume of the storage space of an extendable element using the bottom surface of it.

[89] See Tab C of the final rule briefing package.

CPSC received a comment recommending that the rule require that fill weights be secured to prevent sliding. Some provisions in the NPR included this, but some did not. The final rule specifies that fill weights are to be secured to prevent sliding, but only if necessary. It is not always necessary to secure fill weights to prevent sliding, though it can be helpful at times. Requiring the fill weights to be secured when it is not necessary could be more onerous than is necessary. Moreover, a sliding fill weight tends to slide forward and reduce the tip-over moment (and reduce the likelihood of passing the test), rather than increase the tip-over moment. As such, the final rule provides the flexibility to secure fill weights from sliding, when necessary.

The final rule also removes redundant requirements regarding fill weights. In the NPR, fill requirements were stated separately for units without an interlock and units with an interlock. However, the fill requirements for units without an interlock are the same as the requirements for units with interlocks where 50 percent or more extendable elements are open. At this stage of the stability test, the interlock (if present) has already been tested and interlocks that do not meet the test criteria have been disabled or bypassed. As such, for the fill weights, it only matters whether 50 percent or more of the extendable elements by volume can be extended simultaneously. The final rule eliminates this redundancy. Similarly, because the requirements for acceptable interlock systems are stated in the interlock testing provisions, it is not necessary to restate these in the stability testing section, and the final rule has been revised accordingly.

d. Stability Test Methods

Test Methods. The rule provides two test methods for applying force to a CSU to determine its tip-over moment. The first test method is required for CSUs with extendable elements that extend at least 6 inches from the fulcrum. The test involves applying weights to the face of an extended extendable element, causing the CSU to tip over. The second test is required for CSUs for which Test Method 1 does not apply and involves applying a horizontal force to the CSU orthogonal (*i.e.*, at a right angle) to the fulcrum, causing it to tip forward. Both test methods

require the location of the fulcrum to be determined and the distance from the center of the force application the fulcrum to be measured. For both test methods, the tip-over moment of the unit is then calculated by multiplying the tip-over force by the distance from the force application to the fulcrum.

The NPR requirements were largely the same, but provided an option for which test method to use; it specified that Test Method 1 is more appropriate for CSUs with extendable elements, while Test Method 2 is appropriate for any CSU. In the NPR, Test Method 1 involved applying a vertical force to the face of the uppermost open extendable element to cause the unit to tip over and Test Method 2 involved applying a horizontal force to the back of the CSU orthogonal to the fulcrum to cause the unit to tip over. CPSC received numerous comments requesting revisions to these requirements.

One issue for which commenters sought clarity was when to measure the distance from the force application to the fulcrum. As discussed in the definition of a fulcrum, the fulcrum position should be determined before a tip-over force is applied because the fulcrum position is used as a reference point for several measurements. However, comments indicated that this was not clear in the NPR, and the wording in Test Methods 1 and 2 contributed to that confusion by stating to record the distance from the force application point to the fulcrum and the tip-over force at the same time. To address this confusion, the final rule specifies that the distance measurements to the fulcrum are to be taken before the force is applied in Test Method 1 and Test Method 2.

Comments also suggested that the force in Test Method 1 should be applied with weights. For Test Method 1, the NPR directed testers to gradually apply a vertical force to a specified location, leaving the option of how to apply that force open. However, several commenters stated that the test methods lacked repeatability and reproducibility, indicating that results may vary by tester and by how the force is applied (*e.g.*, with a force gauge by hand, with weights, by

machine). Test reports provided with comments indicated that testing by hand yielded the most variable results; testing with weights yielded consistent results, but was limited to Test Method 1; and testing by machine yielded consistent results within a test method, but differed when comparing Test Method 1 to Test Method 2. CPSC found that much of the subjectivity and variability in the results came from the testers applying the force by hand. To address these comments, ensure that stability testing results are reliable and consistent, and provide clarity for testers, the final rule specifies that Test Method 1 must be conducted using weights.

Because the final rule now specifies that weights are to be used, it also specifies where to place the weights and includes additional information about placement to address comments. In the NPR, the vertical force in Test Method 1 was applied to the face of the uppermost extended extendable element to cause the unit to tip over. However, commenters raised concerns that this would cause drawers to break during testing, implying that testers would not be able to complete the test as a result. The final rule states that weights are to be applied to the face of an extended extendable element, and are to be placed on a single drawer face or distributed evenly across multiple drawer faces or as adjacent as possible to the pull-out shelf face, all while not interfering with other extended extendable elements. Testers that choose to be precise can determine the exact CG of the applied weights. The top center of the drawer face is a reasonable approximation for linear drawer faces because the CG of the applied weights will be aligned with this location. For curved drawers, the center of the drawer face where the most rearward weight is to be placed is a conservative and reasonable approximation. These revisions allow the test weights to be distributed across multiple drawers, which reduces the risk of drawers breaking and preventing completion of testing.

The CG of the applied weight is equivalent to the force application point described in the NPR; while this change may slightly alter the measured tip-over force and the measured distance from the force application point to the fulcrum, it will not affect the tip-over moment determined

by multiplying the required measurements. Additionally, the weights are not allowed to interfere with extended extendable elements so as to not alter the CG of the CSU. Therefore, this change will not affect the test results.

In the NPR, Test Method 2 required a horizontal force to be applied to the back of the unit orthogonal to the fulcrum to cause the unit to tip over. The NPR did not specify how to apply the force, allowing either a push or pull force for this purpose. Like Test Method 1, CPSC received comments stating that Test Method 2 lacked repeatability and reproducibility. Staff assessed the repeatability and reproducibility of Test Method 2 by reviewing the laboratory test report that was provided by two trade associations, and by comparing the test to other furniture stability tests that apply a horizontal force. The laboratory report indicated variability in both methods, with Test Method 1 being almost twice as variable as Test Method 2 when both tests were conducted by hand (3.5 to 7.0 percent, compared to 2.0 to 4.5 percent, respectively). Staff identified the force location and application method as potential contributors to variability. The final rule addresses the variability of Test Method 1 with a recommendation to require the test to be conducted with weights, as described above. To address the variability of Test Method 2, CPSC considered possible modifications to the force location and application method by looking at other furniture stability tests that apply a horizontal load.

Staff identified three applicable tests: ANSI/BIFMA X6.5-2022, section 4.9; ANSI/BIFMA X6.5-2022, section 4.10; and balloted revisions to ASTM F2057-19. Two of these tests differ from Test Method 2 in that they apply a horizontal pull force to the drawer, rather than to the back of the unit; the other test applies a push force to the back of the unit, consistent with the NPR, and to other locations. All three of the tests are otherwise similar in methodology; the key remaining difference is in the types of storage units to which they apply, suggesting that different force application sites may be appropriate for different CSUs.

The NPR already allowed either a push force or a pull force, so long as it was applied to the back of the unit orthogonal to the fulcrum; based on these other test methods and the comments on the NPR, test laboratories may prefer to apply a force to a location other than the back of the unit, and the preference and appropriateness of a method may vary depending on the design of the unit. CPSC has no information that indicates that any of these tests, all conducted by hand, would produce more or less consistent results than the others. Therefore, consistent with the comments, the final rule removes the requirement that the force be applied to the back of the CSU because the appropriate force application location may differ depending on the unit design and this will allow testers the flexibility to determine the best location to apply a force when using Test Method 2 for each unit. The tester's preference may slightly affect variability in results, but CPSC does not expect this revision to alter stability test results in general.

The final rule also addresses which Test Method to use. The NPR specified that Test Method 1 could be used for CSUs with extendable elements and that Test Method 2 could be used for any CSU. The NPR indicated that the test methods produced approximately equal tip-over moments, and therefore either test method could be used. As discussed, there were several comments stating that Test Method 1 and Test Method 2 yield different results, primarily due to differences in force application methods, but also partly due to differences between the two test methods. However, the differences between the two test methods appear to be small. A test laboratory reported only a 3 percent difference when comparing Test Method 1 conducted with weights to Test Method 2 conducted by hand. These small differences between test method and force application methods corroborates the conclusion in the NPR that the two tests (with the above revision to force application methods) yield comparable stability results. However, CPSC considered revisions that may reduce this potential variation further to ensure that CSUs yield consistent and reliable stability test results, which is important for ensuring they are adequately stable. In addition, many commenters, including consumer safety advocates, recommended

requiring only one test method to simplify testing, but commenters differed in which test method they recommended.

The final rule retains two test methods for several reasons. For one, although Test Method 2 is similar in variability to other voluntary standards that use a horizontal load, Test Method 1 with weights is the most accurate and least variable method for assessing stability, based on commenters' data. For this reason, the Commission is not requiring only Test Method 2. However, the Commission is not requiring only Test Method 1 because Test Method 1 cannot be used for CSUs without extendable elements since it requires applying a vertical force to an extendable element, and it is not appropriate for units with short extendable elements because the high loads required to induce tip over increases the potential for drawers to break and placing heavy weights on the drawer front is difficult (see discussion below). Therefore, Test Method 2 is a necessary option for testing CSUs for which Test Method 1 is not appropriate. However, the final rule removes the overlap of these test methods by specifying that Test Method 2 is only to be used when Test Method 1 does not apply. This will eliminate the inconsistent results between test methods raised by commenters and simplify testing.

The final rule also now specifies that Test Method 1 is for units with extendable elements that extend at least 6 inches from the fulcrum, whereas the NPR did not specify an extension distance criteria. Test Method 1 requires that weight be placed on the unit's extendable element face until the unit tips over; that weight is multiplied by the distance it is applied from the fulcrum to determine the tip-over moment. The tip-over moment is then compared to the threshold moment, evaluated in the performance requirement section, and later turned into the stability rating on the hang tag. The tip-over moment is required to be greater than the threshold moment, for a minimum stability rating of 1.0. Using Test Method 1, there is a minimum weight required on an extendable element for a unit to have a stability rating of 1.0. As explained in the NPR, applying force at a location further from the CG of the CSU increases instability more than

applying the force closer to the CG of the CSU (*e.g.*, this is why testing is done with open drawers with weights placed on them). Therefore, the minimum weight to meet the performance requirement increases as the extendable element distance from the fulcrum decreases. When extendable elements have very short distances from the fulcrum, the load required on the extendable element becomes so high that Test Method 1 becomes impractical because the weight takes up more space on the drawer face or the pull-out shelf, and the likelihood of the extendable element breaking increases. For example, a drawer with the median extension of 9.75 inches requires at least 88 pounds to meet the climbing threshold moment, while a drawer with a 6-inch extension requires at least 109 pounds (almost a 25 percent increase) and the rate at which the weight rises increases rapidly as the extension distance decreases.

In general, for CSUs with long extendable element extensions, vertical forces (such as a child's body weight) play a dominant role in producing a tip-over moment. However, as extendable element extensions are shorted or removed, horizontal forces (such as a pull force, or the forces required for a child to hold his or her body in front of the CSU face) dominate the tip-over moment. Vertical forces have very little ability to produce a tip-over moment when extendable element extensions from the fulcrum are sufficiently short.[90] The NPR addressed this by allowing Test Method 2 for any CSU. However, because the final rule eliminates the overlap of the test methods, it is necessary to establish a lower limit on which extendable element extensions can be tested using Test Method 1, and apply Test Method 2 to only those units with extendable element extensions shorter than the limit (or with no extendable elements).

In the dataset of 180 CSU drawer extensions CPSC staff provided to UMTRI researchers, the median drawer extension was approximately 0.81 feet (9.75 inches), with an approximate

[90] A detailed analysis of the combination of forces produced by climbing interactions and how these forces produce a tip-over moment is in Tab D of the NPR briefing package.

range of 0.53 feet (6.38 inches) to 1.15 feet (13.75 inches).[91] Consistent with the minimum drawer extension from the fulcrum identified in this information, 6 inches is the threshold used in the final rule. The use of Test Method 1 for units with extendable elements that extend at least 6 inches from the fulcrum is consistent with the NPR because it still applies to CSUs with extendable elements.

Repairs. The NPR included a note regarding repairs under Test Method 1, which specified that if a drawer breaks during the test due to the force, use Test Method 2 or secure or reinforce the drawer, as long as the modifications do not increase the tip-over moment. This was included in the NPR so that Test Method 1 could be completed even if the force applied to the drawer face resulted in the drawers breaking, but ensured that such modifications would not improve stability. This provision is appropriate because the test is intended to address the stability of the product, not the strength of the product. To accomplish this, it may be necessary for a tester to conduct repairs or modifications to complete stability testing if weaker components break during the test. Such repairs or modifications would not affect the stability testing results and are merely intended to allow testers to complete stability testing. Staff's testing experience indicates that most CSUs require more than 80 pounds on the drawer front to meet the minimum performance requirement but that some CSU drawer designs cannot hold much more than 60 pounds without requiring additional reinforcement.

CPSC received comments indicating that testing may result in drawers needing repairs and requesting guidance on how to address components that break during testing, so that testing may be completed. To address these comments, the final rule applies the repair provisions to both test methods (rather than just Test Method 1). This is because Test Method 2 is no longer an alternative to Test Method 1; the purpose is to allow for needed repairs to complete testing,

[91] Tab D of the NPR and final rule briefing package provide further information about drawer extensions, including Figure 24 in Tab D of the NPR briefing package and Figure 7 in Tab D of the final rule briefing package.

regardless of which test; and although breakage is less likely during Test Method 2, it is possible. The final rule also expands the wording to apply to any component (not just drawers) and to allow for repair, replacement, or securement (not just securement or reinforcement). This is consistent with the purpose of this provision, which is to allow breakage of weaker components that interferes with completing testing to be corrected. Consistent with the NPR, the final rule retains the requirement that any such modifications must not increase the tip-over moment so as not to undermine the integrity of stability test results.

e. Performance Requirements

Pass-fail criteria. Once the tip-over moment has been determined using one of the methods above, the rule specifies that the tip-over moment of the CSU must be greater than several comparison tip-over moments that represent a child interacting with the CSU (the greatest of which is considered the threshold moment). These comparison tip-over moments determine whether the tip-over moment of the CSU is sufficient to withstand tipping over when child interactions identified in incidents and measured by UMTRI occur. Staff developed three pass-fail criteria based on three child interactions that can lead to CSU tip-over incidents. The first interaction is a child climbing (ascending) a CSU; the second is a child pulling on a handhold of a CSU (*e.g.,* while opening or attempting to open an extendable element); and the third is a child climbing (hanging) on the door of a CSU. The comparison tip-over moment for ascending the CSU likely is the most onerous requirement for most CSUs. However, some CSUs with particular geometric features, or without extendable elements, may have greater tip-over moments associated with the alternative criteria, based on children's interactions with the CSU.

Climbing. As incident data indicates, climbing was the most common reported interaction in fatal CPSRMS incidents and nonfatal NEISS incidents; and it was the second most common reported interaction in nonfatal CPSRMS incidents. Fatal and nonfatal climbing incidents most often involved children 3 years old and younger.

CPSC staff's analyses of tip-over incidents in Tab M of the NPR briefing package outlined several scenarios where children climbing or interacting with the front of a CSU caused the CSU to tip over. In some of the scenarios, the force on the edge of an open drawer associated with tipping the CSU was greater than the static weight of a child standing on the edge of an open drawer of the CSU. The equivalent force consists of the child's weight, the dynamic force on the edge of the drawer due to climbing, and the effects of the child's CG extending beyond the edge of the drawer. Based on the UMTRI study, staff estimated the equivalent force to be more than 1.6 times the weight of the child for typical drawer extensions. Therefore, these tip-over incidents occurred because the forces and moments associated with children climbing on a CSU exceeded the static body weight of a child standing on the edge of an open drawer.

Staff determined that the ascend interaction from the UMTRI child climbing study was the most representative of a child climbing interaction seen in the incident data. As discussed in Tab D of the NPR briefing package, based on the UMTRI study of child climbing behaviors (Tab R of the NPR briefing package), ascent can be described by the following equation:

$$M = \{1.08\ [Fulcrum\ X(\text{ft})] + 0.52\ \text{ft}\} \times Weight\ of\ child\ (\text{lb})$$

In this equation, Fulcrum X is the horizontal distance from the front of the extended drawer to the fulcrum.

In the UMTRI study, other measured climbing interactions involving climbing into drawers and climbing onto the tabletop generated lower moments than ascent; thus, they are included within performance requirements based on ascent.

Because most climbing incidents involved children 3 years old and younger, the rule uses the 95th percentile weight of 3-year-old children (51.2 pounds) in this equation to generate the first comparison tip-over moment. The 95th percentile weight of 3-year-old boys is 51.2 pounds

and the 95th percentile weight of 3-year-old girls is 42.5 pounds.[92] To address the heaviest of these children, the rule uses 51.2 pounds. Moreover, this is consistent with the weight of children involved in tip-over incidents, particularly for climbing incidents, when known, or when estimated by their age.

Based on these considerations, to pass the moment requirement for a child ascending a CSU, the tip-over moment (M_{tip}) of the CSU must meet the following criterion: M_{tip} (pound-feet) > 51.2 (1.08X + 0.52), where X is the horizontal distance (in feet) from the front of the extended drawer to the fulcrum.[93] Simplified, this is M_{tip} (pound-feet) > 55.3X + 26.6.

CPSC staff calculates that CSUs that meet a requirement based on the climbing force generated by a 51.2-pound child and that considers the effects of all doors and extendable elements open and extendable elements filled, plus the effect of carpet on stability, likely will protect 95 percent of 3-year-old children and virtually all younger children. This requirement would also protect 92 percent of 4-year-old children, 64.5 percent of 5-year-old children, 50 percent of 6-year-old children, 25 percent of 7-year-old children, and 7.1 percent of 8-year-old children. These are likely low estimates because they assume that all climbing incidents occurred with all open and filled drawers on CSUs located on a carpeted surface, which is a worst-case stability condition.

Pulling handholds. As incident data indicates, opening drawers was also among the most common reported interactions in CSU tip overs involving children, including the most common interaction in nonfatal CPSRMS incidents. Additional incidents involved other interactions that indicate the child opened the drawer as well. For the NPR data set, for tip overs involving

[92] Fryar, C.D., Carroll, M.D., Gu, Q., Afful, J., Ogden, C.L. (2021). Anthropometric reference data for children and adults: United States, 2015–2018. National Center for Health Statistics. Vital Health Stat 3(46). Three years of age covers children who are at least 36 months old and under 48 months old.

[93] For a CSU without drawers, X is measured from the fulcrum to the front edge of the farthest extended element, excluding doors. If the CSU has no extension elements (other than doors), X is measured from the fulcrum to the front of the CSU.

children and only CSUs, where the interaction involved opening drawers, about 53 percent involved children opening one drawer, 10 percent involved opening two drawers, almost 17 percent involved opening "multiple" drawers, and additional incidents reported children opening "all" drawers or a specific number of drawers that may have represented all of the drawers on the unit. Incidents involving opening drawers most commonly involved children 3 years old and younger.

As discussed earlier, it is possible for CSUs to tip over from the forces generated by open drawers and their contents, alone, without additional interaction forces. However, pulling on an extendable element or door to open it applies an increased force that contributes to instability. The moment generated with a horizontal force is higher as the location of the force application gets farther from the floor. Therefore, the rule includes as the second required comparison tip-over moment, the moment associated with a child pulling horizontally on the CSU at the top reachable extendable element or other handhold within the overhead reach dimension of a 95th percentile 3-year-old. This is because children 3 years old and younger are most commonly involved in these incidents.

The rule establishes a comparison moment based on a horizontal pull force applied to the top of an extended drawer in the top row of drawers, or to another potential handhold, that is less than or equal to 4.12 feet high (49.44 inches). The 4.12-foot height limit is based on the overhead reach height for a 95th percentile 3-year-old male; the rule uses the overhead reach height of 3-year-olds because most children involved in opening drawer incidents were 3 years old or younger.[94] Consistent with this overhead reach height, staff's analysis of 15 incidents shows that the highest pull location was 46 inches from the floor.[95]

[94] Pheasant, S. (1986). Bodyspace Anthropometry, Ergonomics & Design. London: Taylor & Francis.
[95] Staff assessed 15 child incidents in which the height of the force application could be calculated based on descriptions of the incidents. Force application heights ranged from less than one foot to almost four feet (46.5 inches), and children pulled on the lowest, highest, and drawers in between.

The rule includes a 17.2 pound-force of horizontal pull force. This pull force is based on the mean pull strength of 2- to 5-year-old females exerted at elbow level on a convex knob. The mean pulling strength of 2- to 5-year-old females is 76.43 Newton (17.2 pound-force), and 59.65 Newton (13.4 pound-force) for males.[96] In the study that provided these pull strengths, participants were 2 to 5 years old, and the mean participant weight was 16.3 kilograms (36 pounds). Participants were asked to exert their maximum strength at all times, described as the most force they could exert without causing injury, using their dominant hand. Participants were instructed to build up to their maximum strength in the first few seconds, and to maintain maximum strength for an additional few seconds.

The rule uses this 17.2 pound-force pull strength because, in the study, females had a higher mean strength than males, and these incidents most commonly involve children 3 years old and younger. The weight of children in the study (36 pounds) is over the 50th percentile weight of 3-year-old children. Therefore, the pull force test requirement will address drawer opening and pulling on CSU incidents for 50 percent of 3-year-olds, 95 percent of 2-year-olds, 100 percent of children under 2 years, 25 percent of 4-year-olds, 10 percent of 5-year-olds, and will not address these incidents for children 6 years old and older.

Based on this 17.2-pound horizontal force on a handhold at a height of up to 4.12 feet, the moment created by this interaction can be described with the equation M (pound-feet) = 17.2 (pounds) × Z (feet), where Z is the vertical distance (in feet) from the fulcrum to the highest handhold that is less than or equal to 4.12 feet high. Using this equation, the tip-over moment of the CSU in the second comparison value in the proposed rule is M_{tip} (pound-feet) > 17.2Z.

Climbing on doors. As discussed, incident data also indicates that fatal and nonfatal tip-over incidents involved wardrobes and armoires, which include doors. In most of these incidents,

[96] DTI, Strength Data for Design Safety – Phase 1 (DTI/URN 00/1070). London: Department of Trade and Industry. (2000).

children were interacting with things inside the CSU, indicating that the doors were open. The youngest child involved in these incidents was 3 years old, but opening doors is easily within the physical and cognitive abilities of younger children. Once CSU doors are open, children are capable of putting their body weight on the open doors (*i.e.*, open and climbing/hanging), provided the child has a sufficient hand hold, and incident data indicates that climbing in general is a common interaction. For this reason, the third comparison tip-over moment in the rule represents the force from a 95th percentile 3-year-old child hanging on an open door of the CSU.

UMTRI researchers found that the vertical forces associated with children hanging by the hands were close to the body weight of the child.[97] For this reason, the third comparison tip-over moment, representing a child hanging on an open door, uses the weight of a 95th percentile 3-year-old child, or 51.2 pounds. CPSC considers the weight placement location for testing doors in ASTM F2057-19 (section 7.2) reasonable. Therefore, the proposed rule uses the test location from the voluntary standard, which is approximately half the width of the test fixture, or 3 inches, from the edge of the door, to obtain the equation describing a 95th percentile weight 3-year-old child hanging from an open door of a CSU: M (pound-feet) = 51.2 (pounds) × [Y – 0.25 (feet)], where Y is the horizontal distance (in feet) from the fulcrum to the edge of the door in its most extended position. Based on this equation, the tip-over moment of a CSU with doors must meet the following criterion: M_{tip} (pound-feet) > 51.2(Y – 0.25). Simplified, this is M_{tip} (pound-feet) > 51.2Y – 12.8 pound-feet.

Additional addressability. For the reasons described above, the rule focuses on the interactions of children climbing on and opening CSUs. Although other plausible climbing-associated behaviors (*e.g.*, yank, lean, bounce, one hand) included in the UMTRI study generated higher moments, there was no direct evidence of these interactions in the incident data. However,

[97] See Figure 48 in Tab R of the NPR briefing package.

depending on the child's age, weight, and strength, some of these interactions could be addressable with the performance requirements. Other measured climbing interactions (*e.g.,* hop up, hang, in drawer, and climbing onto the tabletop) generated lower moments than ascent, making these interactions addressable by the final rule.

In addition, although the rule focuses on addressing the CSU tip-over hazard to children, improving the stability of CSUs should also reduce incidents involving adults. Most incidents involving adults included opening drawers, getting items in and out of drawers, or leaning on the CSU. These interactions are likely to be less onerous or equally onerous to the forces addressed in the rule.

C. Marking and Labeling

1. Final Rule Requirements

The final rule includes requirements for a warning label. The warning label requirements address the size, content, symbols, and format of the label. The warning statements address the CSU tip-over hazard, and how to avoid it. They indicate that children have died from furniture tipping over, and direct consumers how to reduce the risk of tip overs, by securing furniture to the wall; not allowing children to stand, climb, or hang on units; not defeating interlock systems (if the unit has them); placing heavier items in lower drawers; and not putting a television on CSUs (when the manufacturer indicates they are not designed for that purpose). The format, font, font size, and color requirements incorporate by reference the provisions in ASTM F2057-19. The rule also includes requirements for the location of the warning label, addressing placement in drawers or doors, and the height of the label in the unit. The rule also requires the warning label to be legible and attached after it is tested using the methods specified in ASTM F2057-19.

The rule also includes requirements for an informational mark or label. It requires the mark or label to include the name and address of the manufacturer, distributor, or retailer; the model number; the month and year of manufacture; and state that the product complies with the

proposed rule. There are size, content, format, location, and permanency requirements as well. The mark or label must be visible from the back of the unit when the unit is fully assembled and must be legible and attached after it is tested using the methods specified in ASTM F2057-19.

2. Basis for Final Rule Requirements

The final rule requires a warning label to inform consumers of the tip-over hazard, indicate steps consumers can take to reduce the risk (*e.g.*, use anti-tip devices, do not let children climb on the CSU, placing the heaviest items in the lowest drawer), and motivate consumers to take those steps.

a. Warning Label Text

For a warning label to be effective, consumers must read the message, comprehend the message, and decide whether the message is consistent with their beliefs and attitudes. In addition, consumers must be motivated enough to spend the effort to comply with the warning-directed safe behavior. Warnings should allow for customization of hazard avoidance statements based on unit design, to reflect incident data (*e.g.*, television use). Similarly, the warning text should be understandable, not contradict typical CSU use, and be expressed in a way that motivates consumers to comply.

The FMG CSU use study considered these factors, with focus group participants evaluating the ASTM F2057-19 warning label text, which is similar to the final rule. Based on the principles above and the focus group findings, the warning statements in the final rule are similar to those in the ASTM standard. The warning label includes warnings about the hazard, television use (where appropriate for the product), and placing heavier items in lower drawers, but does not include a statement to not open multiple drawers because a majority of focus group participants said that they and their children open multiple drawers simultaneously. In addition, the tip-restraint warning explicitly directs the consumer to secure the CSU to the wall and uses a term for tip restraint that consumers will likely understand. "Tipover restraint," used in ASTM

F2057-19, might confuse some consumers because restraints generally describe what they contain (*e.g.*, child restraint), rather than what they prevent. Terminology such as "anti-tip device" is clearer.

The warning text requirements in the final rule are the same as those proposed in the NPR, but the final rule makes explicit that the content of the warning label must not be modified or amended, except as specifically permitted in the rule. The NPR explained that the warning text in the proposed regulation must be used for the warning label, except for specified modifications regarding televisions and interlocks, which varied depending on the CSU. The final rule makes this explicit for several reasons. For one, CPSC received comments on the NPR recommending that the Commission allow manufacturers to determine what hazards to address on the label, and how. As explained in the discussion of comments, above, CPSC developed the warning label requirements, including the text, based on commonly used approaches in voluntary standards, ASTM's warning label requirements, consumer studies, research, human factors assessments, and staff's expertise. Such insights and expertise would be lost, and warnings likely would be less effective, if manufacturers were permitted to determine the warning content.

In addition, the primary U.S. voluntary consensus standard on product safety signs and labels, ANSI Z535.4, *Product Safety Signs and Labels*, states that word messages should be concise, readily understandable, and restricted to the most critical information. Requiring that warning label text precisely meet the requirements in the rule and not include additional content, as well as requiring that specific features (*i.e.*, interlocks and televisions) only be addressed when appropriate for the particular CSU, achieves this.

b. Warning Label Symbols

The final rule requires the ASTM F2057-19 "no television" symbol for CSUs that are not designed to hold a television, as proposed in the NPR. The final rule also requires a three-panel

child climbing symbol on the warning label. The NPR presented three possible child climbing symbols that the Commission was considering, displayed in Figure 9, below.

Proposed in the NPR: 

Variant 1: 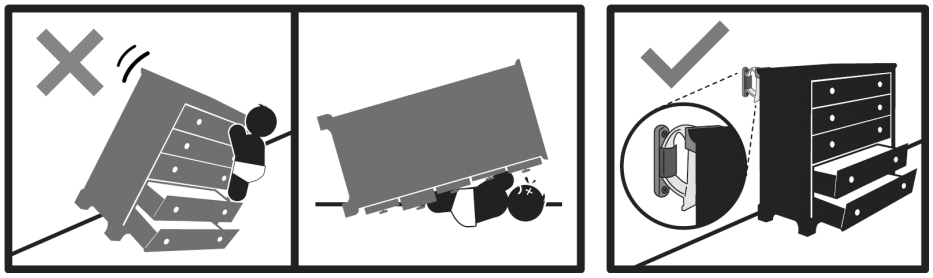

Variant 2: 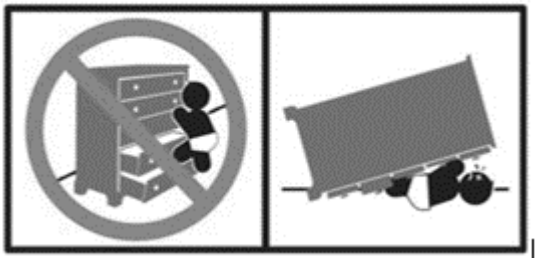

Figure 9: The three child climbing symbols presented in the NPR. Note: the symbols are reproduced in grayscale here, but the color version includes a red "x" and prohibition symbol, and a green check mark.

The NPR proposed to require the first symbol displayed in Figure 9, which is the symbol used in ASTM F2057-19, and raised as possible alternatives to that symbol, the two variants. As the NPR explained, CPSC was working with contractors to test the two variants using the same methodology as the previous comprehension study. Based on the subsequent findings of that study, discussed earlier in this preamble, Variant 1 surpassed the ASTM symbol and Variant 2 in comprehension testing.

CPSC also received comments on the three possible warning symbols, which expressed a preference for Variant 1. Based on comments and because Variant 1 showed better

comprehension than the ASTM symbol or Variant 2, the final rule requires that Variant 1 be provided as part of the warning label. The rule allows the third panel of the symbol (*i.e.*, the one depicting attachment to the wall) to be modified to show the specific anti-tip device included with the CSU. This is based on a comment expressing concern with the specific type of anti-tip device depicted and on CPSC staff's assessment that consumers will better understand the function and set up of an anti-tip device provided with a CSU if the symbol depicts that specific type of device.

c. Warning Label Format

The rule requires the warning label to be at least 2 inches wide by 2 inches tall. This size is consistent with the required content and format for the label, and it ensures that the label is not too narrow or short. CPSC staff regularly uses ANSI Z535.4, *American National Standard for Product Safety Signs and Labels*—the primary U.S. voluntary consensus standard for the design, application, use, and placement of on-product warning labels—when developing or assessing the adequacy of warning labels. The rule uses the warning format in ASTM F2057-19, which is consistent with ANSI Z535.4. These requirements are the same as those in the proposed rule.

d. Warning Label Placement

For CSUs with drawers, the rule requires the warning label to be placed at the top and front of the interior side panel of a drawer in the uppermost drawer row or, if the top of the drawer in the uppermost drawer row is more than 56 inches from the floor, the label must be on the interior side panel of a drawer on the uppermost drawer row below 56 inches from the floor. The 56-inch criterion is based on the 5th percentile standing eye height of women in the United States, to ensure that the label is visible.[98] For CSUs with doors, the warning label must be on an

[98] Nesteruk, H.E.J. (2017). Human Factors Analysis of Clothing Storage Unit Tipover Incidents and Hazard Communication. In Staff Briefing Package Advance Notice of Proposed Rulemaking: Clothing Storage Units. Available at: https://www.cpsc.gov/s3fs-public/ANPR%20-%20Clothing%20Storage%20Unit%20Tip%20Overs%20-%20November%2015%202017.pdf .

interior side or back panel of the cabinet behind the door or on the interior door panel, and must not be obscured by a shelf or other interior element. For CSUs that are assembled by consumers, the warning label must be pre-attached to the panel and the assembly instructions must direct consumers to place that panel according to the placement requirements for drawers and doors that are specified in the rule. These requirements are the same as in the NPR.

The placement requirements in the rule are consistent with the information CPSC obtained from the FMG study, regarding placement of warnings. In the FMG CSU use study,[99] researchers evaluated warning labels in in-home interviews and focus groups. They found that participants indicated that they had not paid attention to or noticed warning labels on the units in their children's rooms, even when the researchers noted they were present. Focus group participants identified the inside of the top drawer of a unit as a location where a warning label could be seen easily and be more likely to grab their attention. Participants also expressed that they would remove labels that were too conspicuous (*e.g.*, on the outside or top of a unit).

e. Warning Label Permanency

To be effective, a warning label must remain present. Label permanency requirements are intended to prevent the warning label from being removed inadvertently and to provide resistance to purposeful removal by the consumer. The final rule requires that the warning label be legible and attached after it is tested using the methods in section 7.3 of ASTM F2057-19. CPSC staff evaluated the ASTM F2057-19 label permanency requirements[100] and concluded that they are sufficiently effective. This is the same as proposed in the NPR.

f. Identification Mark or Label

As indicated in the NPR, CPSC was able to identify the manufacturer and model of CSU associated with only 22 of the 89 fatal CPSRMS incidents involving children and CSUs without

[99] See Tab Q of the NPR briefing package.
[100] See Tab F of the NPR briefing package.

televisions and 230 of the 263 nonfatal CPSRMS incidents involving children and CSUs without televisions. In the case of recalls, consumers must be able to identify whether their CSUs are subject to the recall and are potentially unsafe. Accordingly, an identification label that provides the model, manufacturer information, date of manufacture, and a statement of compliance with the rule is important to facilitate identification and removal of potentially unsafe CSUs, especially by consumers who may need to identify units that may be recalled after purchase.

For this reason, the final rule requires an identification mark or label containing this information. The mark or label must be at least 2-inches wide by 1-inch tall, which is consistent with the required content and format, and ensures that the label is not too narrow or short. The rule requires text size that is consistent with ANSI Z535.4. The mark or label must be visible from the back of the unit when the unit is fully assembled because it is not necessary for the label to be visible to the consumer during normal use, but it should be visible to anyone inspecting the unit. In addition, the rule requires the mark or label remain legible and attached after it is tested with the methods in section 7.3 of ASTM F2057-19 to increase the likelihood that the label remains attached to the CSU and will be legible when needed.

These requirements are the same as the NPR except that the final rule refers to this as an "identification mark or label," rather than just an "identification label." This does not change the meaning of the requirements, but addresses a comment that expressed concern that the term "label" meant that other means of applying the information to the product (*e.g.*, printing, etching, engraving, or burning) were not permissible. The permanency testing requirements in section 7.3 of ASTM F2057-19 include requirements for paper labels, non-paper labels, and those applied directly to the surface of the product. As such, the final rule does not prevent firms from applying the informational label in various ways that can be tested and comply with the requirements in section 7.3 of ASTM F2057-19. However, to make this clear, the final rule

includes the term "mark," in addition to "label," as "mark" more clearly conveys the availability of direct application to the surface of the product for meeting the requirement.

D. Hang Tags

1. Final Rule Requirements

As discussed above, section 27(e) of the CPSA authorizes the Commission to issue a rule to require manufacturers of consumer products to provide "such performance and technical data related to performance and safety as may be required to carry out the purposes of [the CPSA]." 15 U.S.C. 2076(e). The Commission may require manufacturers to provide this information to the Commission or, at the time of original purchase, to prospective purchasers and the first purchaser for purposes other than resale, as necessary to carry out the purposes of the CPSA. *Id.*

The final rule sets out requirements for providing this performance and technical data in the form of a hang tag.[101] The hang tag provides a stability rating, displayed on a scale of 1 to "2 or more," that is based on the ratio of tip-over moment (as determined in the testing required in the rule) to the minimally allowed tip-over moment (provided in the rule). The rule includes size, content, icon, and format requirements for the hang tag. It also includes requirements that the hang tag be attached to the CSU and clearly visible to a person standing in front of the unit; that lost or damaged hang tags be replaced such that they are attached and provided, as required by the rule; and that the hang tags may be removed only by the first purchaser. In addition, the rule includes placement requirements that the hang tag appear on the product and the immediate container of the product in which the product is normally offered for sale at retail; that for RTA furniture, the hang tag must appear on the main panel of consumer-level packaging; that any units shipped directly to consumers contain the hang tag on the immediate container of the product; and that the hang tag information be provided on manufacturers' and importers' online

[101] This requirement is issued under the separate section 27(e) of the CPSA, whereas the rest of the rule is issued under sections 7 and 9 of the CPSA.

sales interfaces from which the CSU may be purchased. For a detailed description of the requirements, see the regulatory text.

2. Basis for Final Rule Requirements

a. Purpose

Consistent with the requirements in section 27(e) of the CPSA, the hang tag requirements carry out the purpose of the CPSA by "assisting consumers in evaluating the comparative safety of consumer products." 15 U.S.C. 2051(b)(2). The rule requires CSUs to meet a minimum level of stability (*i.e.*, exceed a threshold tip-over moment). However, above that minimum level, CSUs may have varying levels of stability. A hang tag provided on the CSU offers consumers comparative information about the stability of products, based on the tip-testing protocol in the rule. By providing product information at the time of original purchase, the hang tag informs consumers who are evaluating the comparative safety of different CSUs and making buying decisions. This information may also improve consumer safety by incentivizing manufacturers to produce CSUs with higher levels of stability, to better compete in the market, thereby increasing the overall stability of CSUs on the market. It also helps focus a consumer's attention on the additional actions consumers can take to make to further reduce the tip-over hazard described in the performance and technical information, such as anchoring them or replacing old units with new CSUs that meet the standard.

b. Background

CPSC based the formatting and information requirements in the hang tag on work CPSC has done previously to develop performance and technical data requirements,[102] as well as the work of other federal agencies that require comparative safety information on products.[103] As

[102] *E.g.*, 16 CFR 1401.5, 1402.4, 1404.4, 1406.4, 1407.3, and 1420.3.
[103] *E.g.*, the Federal Trade Commission's EnergyGuide label for appliances in 16 CFR part 305, requiring information about capacity and estimated annual operating costs; and the National Highway Traffic Safety

part of CPSC's development of a similar requirement for recreational off-highway vehicles (ROVs), CPSC issued a contract for cognitive interviews and focus group evaluation to refine the proposed ROV hang tag. The contractor (EurekaFacts) developed recommendations regarding the content, format, size, style, and rating scale, based on consumer feedback during this work.[104]

Studies on the usefulness and comprehension of point-of-sale product information that is intended to help consumers evaluate products and make buying decisions, support the effectiveness of hang tags, and linear scale graphs, in particular. For example, a study on the EnergyGuide label for appliances, which also uses a linear scale, indicated that the label increased consumer awareness of energy efficiency as an important purchasing criterion.[105]

c. Specific Elements of the Final Rule Requirements

Applicability. Section 27(e) of the CPSA authorizes the Commission to apply requirements for performance and technical information to manufacturers. Under the CPSA, a "manufacturer" is "any person who manufactures or imports a consumer product." 15 U.S.C. 2052(a)(11). As such, these requirements apply to manufacturers and importers.

Content. The required hang tag includes a symbol on the front and back of the hang tag. Research has shown that pictorial symbols and icons make warnings more noticeable and easier to detect than warnings without them.[106] Additionally, including a graphic before introducing text may serve as a valuable reference for consumers, by maintaining attention and encouraging

---

Administration's New Car Assessment Program star-rating for automobiles, providing comparative information on vehicle crashworthiness.

[104] EurekaFacts, LLC, *Evaluation of Recreational Off-Highway (ROV) Vehicle Hangtag: Cognitive Interview and Focus Group Testing Final Report* (Aug. 31, 2015), available at: https://www.cpsc.gov/s3fs-public/pdfs/ROVHangtagEvaluationReport.pdf.

[105] National Research Council. *Shopping for Safety: Providing Consumer Automotive Safety Information -- Special Report 248.* Washington, DC: The National Academies Press (1996).

[106] Wogalter, M., Dejoy, D., Laughery, K. (1999). *Warnings and Risk Communication*. Philadelphia, PA: Taylor & Francis, Inc.

further reading.[107] In addition, presenting information both graphically and textually offers a better chance of comprehension by a wide range of users, such as non-English-literate users. Both symbols depict a CSU tipping over, and one of them shows a child climbing a CSU that is tipping over. These symbols identify the product and hazard.

The hang tag also includes a title—Stability Rating—to make clear what information is provided on the tag. To allow consumers to identify exactly what product the label describes, the hang tag requires the manufacturer's name and the model number of the unit.

The performance criteria in the stability provisions of the final rule require the tested moment of a CSU to be greater than a calculated threshold moment requirement. The tip rating number on the hang tag is the ratio of tested moment to threshold requirement. This provides a simple calculation that results in a number greater than 1,[108] which can be represented easily on a scale. Additionally, due to the nature of a ratio, a rating of 1.5 means the unit can withstand one and one-half times the threshold moment, a rating of 2 means the unit can withstand twice the threshold moment, and so forth. The graph starts with the minimally acceptable tip rating of 1[109] and indicates that it is the minimum, so that consumers can evaluate the extent to which the rating of a particular CSU meets or exceeds the minimum permissible rating. The NPR proposed to start the scale at 0, and mark 1 on the scale as the minimally acceptable rating. However, based on comments, the final rule begins the scale at 1, because there is no need to show a lower rating, since a CSU with a stability rating lower than 1 would not meet the stability requirements of the rule and would be impermissible.

---

[107] Smith, T. P. (2003). *Developing consumer product instructions.* Washington, DC: U.S. Consumer Product Safety Commission.

[108] The equation is Moment $_{tested}$/Moment $_{threshold}$. If Moment $_{tested}$ = Moment $_{threshold}$, then Moment $_{tested}$/Moment $_{threshold}$ = 1. But the performance requirement is that Moment $_{tested}$ *exceed* Moment $_{threshold}$. Therefore, all units must have a ratio greater than 1, although it may be only a small fraction over 1.

[109] Although the minimally acceptable rating is just above 1, for simplicity, the hang tag marks the minimally acceptable rating as 1.

The NPR proposed to require the maximum rating displayed on the scale to be 5. CPSC staff testing suggests that most CSUs on the market today would achieve ratings between 1 and 2, after being modified to comply with the stability requirements in the rule. CPSC also received numerous comments on the NPR indicating that, even with modifications, CSUs currently on the market would not exceed a stability rating of 2. Commenters expressed concern that displaying a scale that goes higher than 2 would confuse consumers looking for higher-rated CSUs and would suggest that a rating of 2 is not sufficiently stable. To address these concerns, the final rule modifies the maximum rating displayed on the scale to "2 or more." This reflects currently achievable stability ratings and still allows for future designs that may exceed a rating of 2. If CSU designs evolve to commonly exceed a rating of 2, the Commission can adjust the maximum rating on the scale in a future rulemaking.

Because the stability rating scale ranges from 1 to "2 or more," many stability ratings will fall between these whole numbers. As such, the final rule specifies that the stability rating must be displayed rounded to one decimal place (*e.g.* 1.5). Although, as the NPR noted, research suggests that consumers prefer whole numbers, keeping a scale of 1 to 2 and reflecting differences with decimals allows for better relative comparisons because, with this scale, a consumer can understand that a CSU with a rating of 1.5 is one and a half times more stable than a CSU with a rating of 1.0. To ensure this is clear, the final rule also includes a requirement that the front of the hang tag include such an explanatory statement (*e.g.*, "This unit is 1.5 times more stable than the minimum required").

Because the linear scale on the hang tag is a graphical representation of the stability information, the requirement also includes text to explain the importance of the graph, and the significance and meaning of the tip-over resistance value of the CSU so that consumers understand the data on the tag. The back of the hang tag includes a technical explanation of the graph and rating to explain how to interpret and use the graphic and number. In addition, based

on comments provided on the NPR, the final rule adds a statement to the front of the hang tag (stating "This unit is X times more stable than the minimum required," with the stability rating being inserted for X) to briefly explain the technical information more quickly and understandably. The front of the hang tag also must state: "Higher numbers represent more stable units" to explain the meaning of the rating. The front of the hang tag also includes statements to connect the technical information (*i.e.*, the stability rating) with the safety concern, such as "this is a guide to compare units' resistance to tipping over"; "always secure the unit to the wall"; and "tell children not to climb furniture."

Size, color, and format. As proposed in the NPR, the final rule requires the physical hang tag to be at least 5 inches wide by 7 inches tall. This size requirement is consistent with the recommendations by EurekaFacts and similar requirements in other standards. The EurekaFacts report found that participants preferred hang tags to be large because they were more noticeable and easier to read. In addition, participants preferred a vertical orientation. Also as proposed in the NPR, the final rule requires the front of the hang tag to be yellow. This increases the likelihood that consumers will notice the tag, is consistent with EurekaFacts' findings regarding effective hang tags, and aligns with other similar federal hang tag requirements (such as the EnergyGuide for household appliances). The rule also requires the hang tag to be formatted as shown in the figure provided, which offers consistency and ease of comparison across CSU models.

Attachment and placement. Like the NPR, the final rule requires hang tags to be attached to the CSU at the time of original purchase, in a place that is clearly visible to a person standing in front of the unit, and that they be replaced if lost or damaged, to ensure they are available at the time of original purchase. In addition, the hang tag must be on the immediate container of the CSU in which it is normally offered for sale at retail; on the main panel of consumer-level

packaging for RTA furniture; on the immediate container of the CSU for units shipped directly to consumers; and remain on the product/packaging/container until the time of original purchase.

The final rule also requires that manufacturers and importers of CSUs that have an online sales interface from which consumers may purchase CSUs, provide on the online sales interface where the CSUs are offered the same information required on physical hang tags, with some modifications and additions to reflect differences in online and physical displays. The final rule includes this additional online hang tag requirement because many consumers buy CSUs online and not just in physical stores. As such, the "time of original purchase" includes online sales, and consumers buying online would only see the comparative safety information provided on the hang tag if it is provided in these online sales interfaces as well. Consistent with this, numerous commenters noted that online sales interfaces are also places consumers buy CSUs, and the hang tag information is necessary in these venues to facilitate informed decision making. This requirement is also consistent with similar federal requirements to provide performance and technical information, such as EnergyGuide labels for appliances, which apply to sales websites.[110]

In general, online hang tags must meet the same content, form, and sequence requirements as physical hang tags. This ensures that consumers have the same information, in the same easily comparable form, whether shopping online or in stores, and facilitates comparisons between online and in-store products. The only difference in content between online and physical hang tags is that online hang tags need not contain the statements "See back side of this tag for more information" and "This tag not to be removed except by consumer" since these statements are not applicable to non-physical hang tags.

[110] *See* Federal Trade Commission (2013) EnergyGuide Labeling: FAQs for Appliance Manufacturers, available at: https://www.ftc.gov/business-guidance/resources/energyguide-labeling-faqs-appliance-manufacturers.

The online hang tag requirements also address placement and visibility on the website to ensure that, similarly to physical hang tags, online hang tags are noticeable and legible to consumers. Because of the large amount of content in the hang tag and the importance of this information being visible, for online sales interfaces, the stability rating must be displayed in a font size that is equivalent to that of the price and in proximity to the price of the product. This ensures that the stability rating will be visible to consumers when making their buying decisions and that the information will not be buried in less visible places on the interface. Also because of the large amount of content in the hang tag, online sales interfaces must provide the full hang tag through a link that is accessible through one user action (such as through a mouse click, mouse roll-over, or tactile screen expansion) on the displayed stability rating. This provides the same comparative information, in the same format, as physical hang tags, but also accommodates the need for other information on the website for the product. These requirements are consistent with those for online EnergyGuide labels as well as the European Union's online energy label requirements.[111]

Together, the physical and online hang tag requirements ensure that the hang tag information is available and visible to consumers at the time of original purchase, whether they are purchasing in a store or online, and whether the CSU is assembled and on display, or in packaging. These requirements are necessary for consumers to be able to use the information to make informed buying decisions. These requirements are consistent with similar standards and align with the limits provided in section 27(e) of the CPSA, which limit performance and technical data requirements manufacturers and the time of original purchase.

[111] *See* European Commission, Internet Labelling - Nested Display Arrows For Labels, available at: https://ec.europa.eu/energy/eepf-labels/label-type/internet-labels.

E. Prohibited Stockpiling

1. Final Rule Requirements

Section 9(g)(2) of the CPSA allows the Commission to prohibit manufacturers of a consumer product from stockpiling products subject to a consumer product safety rule to prevent manufacturers from circumventing the purpose of the rule. 15 U.S.C. 2058(g)(2). The statute defines "stockpiling" as manufacturing or importing a product between the date a rule is promulgated and its effective date at a rate that is significantly greater than the rate at which the product was produced or imported during a base period ending before the date the rule was promulgated. *Id.* The Commission is to define what constitutes a "significantly greater" rate and the base period in the rule addressing stockpiling. *Id.*

The final rule prohibits manufacturers and importers of CSUs from manufacturing or importing CSUs that do not comply with the requirements of the rule in any 1-month period between the date the rule is promulgated and the effective date of the rule at a rate that is greater than 105 percent of the rate at which they manufactured or imported CSUs during the base period for the manufacturer. The rule defines the base period as the calendar month with the median manufacturing or import volume within the last 13 months immediately preceding the month of promulgation of the final rule. This is the same limit as proposed in the NPR.

2. Basis for Final Rule Requirements

The purpose of the stockpiling limit is to prevent manufacturers and importers from stockpiling products that will be subject to a mandatory rule, in an attempt to circumvent the final rule. Because most firms will need to modify their CSUs to comply with the requirements in the rule, and the modifications may be costly, CPSC believes it is necessary to prevent stockpiling of noncompliant products. The stockpiling limit will allow manufacturers and importers sufficient flexibility to meet normal levels and fluctuations in demand for CSUs, while limiting their ability to stockpile large quantities of CSUs that do not comply with the rule for

sale after the effective date. CPSC received several comments on the stockpiling limits in the NPR, most of which supported the provisions.

Based on comments largely supporting the stockpiling limits in the NPR and the need for such provisions to allow manufacturers and the industry to meet existing or foreseeable increases in the demand for CSUs, without allowing large quantities of CSUs that do not meet the standard to be stockpiled, the final rule retains the stockpiling provisions proposed in the NPR. This stockpiling provision reflects a balance between the competing goals of addressing the hazard but also considering the compliance cost and practicalities for businesses and potential impacts on consumers.

X. Final Regulatory Analysis[112]

The Commission is issuing this rule (except for the requirement for a hang tag) under sections 7 and 9 of the CPSA. The CPSA requires that the Commission publish a final regulatory analysis with the text of the final rule. 15 U.S.C. 2058(f)(2). This section provides the final regulatory analysis of the rule. For additional details, see Tab H of the NPR and final rule briefing packages. For significant comments received on the regulatory analysis provided in the NPR, see section **VIII. Response to Comments**.

A. Market Information

Retail prices of CSUs vary substantially, with the least-expensive units retailing for less than $100, while some more expensive units may retail for several thousand dollars. The less expensive units may be in use for only a few years, while the most expensive units may remain in use for decades, and possibly be passed from one generation to the next. CPSC staff used sales

[112] Further detail regarding the final regulatory analysis is available in Tab H of the final rule briefing package.

information provided by large furniture associations during the NPR comment period to estimate an average price per CSU of $338.50 in 2021 dollars, for this analysis.[113]

CPSC staff used multiple sources of information to estimate the annual revenues from the sale of CSUs within the scope of the final rule and estimates that there were $6.99 billion retail sales in 2021 of CSUs within the scope of the rule.[114] CPSC staff estimates that there were 20.64 million units sold in 2021 by dividing the $6.99 billion in sales revenue by the average price of $338.50. A large majority of these CSUs were likely imported, mainly from Asia. CPSC staff also developed an estimate of the number of models sold each year. To develop this estimate, staff used the assumption that, on average, 10,000 individual CSUs of each CSU model are sold. CPSC staff divided the number of CSUs sold in each year by 10,000 units of estimated sales per model, to generate a rough approximation that 2,064 new CSU models were sold in 2021.

CPSC staff estimated the number of CSU units in use using estimates of historic sales of CSUs, in combination with a statistical distribution of CSU failure rates (*i.e.*, when CSUs are discarded by consumers, based on the average lifecycle of 15 years). The estimate of CSUs in use was constructed iteratively, to reflect that CSUs in use may remain in use for varied periods beyond the 15-year period. Using this approach, CPSC staff estimates that there were 229.94 million CSUs in use in 2021. CPSC staff estimated the number of CSU models in use in a similar fashion, estimating that the number of CSU models in use in 2021 is 6,365.

B. Benefits Associated with the Rule

CPSC staff measured the benefits of the rule as the expected reduction in societal costs of deaths and injuries from implementation of the rule.

[113] Staff increased the average price per CSU from the value used in the NPR to reflect information provided by large furniture associations during the comment period.
[114] This estimate is higher than the 2018 estimate used in NPR of $5.15 billion. Sales data were updated to 2021 in order to reassess the number of CSUs in light of updated market prices provided during the NPR comment period.

Death and injury estimates. In addition to the incident data discussed in this preamble from the CPSRMS and NEISS databases, staff used estimates generated by CPSC's Injury Cost Model (ICM).[115] The ICM uses data from NEISS's representative hospitals to generate national estimates of the total number of ED-treated injuries and hospital admissions. Beyond injuries initially treated in EDs and through hospital admissions, many product-related injuries are treated in other medical settings, such as physicians' offices, clinics, and ambulatory surgery centers. Some injuries also result in direct hospital admission, bypassing the hospital ED entirely. Therefore, the ICM also estimates the number of injuries treated outside of hospital EDs.

For this benefit-cost analysis, CPSC staff chose a 15-year timeframe (*i.e.*, 2007-2021) to reflect the average product life of a CSU and excluded data from 2022 because it is not complete. CPSC staff identified at least 60 deaths related to CSU tip-over incidents without televisions and involving children, for an average of 4 deaths per year. The ICM estimated that there were 44,652 injuries to children under the age of 18 years involving CSU tip-overs from 2007 through 2021, or an average of 2,977 per year that were treated in EDs or through hospital admissions. The ICM also projected an additional 58,351 CSU tip-over injuries to children treated in other settings during the same 15-year period, or an average of 3,890 per year. Combined, there were an estimated 103,003 injuries from 2007 through 2021, or an average of 6,867 per year to children from CSU tip overs.

From 2007 through 2021, there were 22 adult fatalities involving CSU tip-overs, an average of 1.5 a year. The ICM produced a national estimate of 23,695 adults treated in EDs and through hospital admissions because of injuries received when CSUs tipped over. The ICM also projected that there were 50,119 adult injuries treated in other medical settings, for a total of

[115] For additional information about the ICM, see Tab H of the final rule briefing package and CPSC's website at: https://www.cpsc.gov/content/The-Consumer-Product-Safety-Commissions-Revised-Injury-Cost-Model-2018.

73,814 medically attended injuries to adults involving CSU tip overs, or an average of 4,921 a year.

Societal costs of deaths and injuries. CPSC staff used the U.S. Environmental Protection Agency's value of statistical life (VSL) of $10.5 million[116] to estimate the societal costs of CSU-related deaths. Using this VSL, the societal cost of annual child fatalities (involving only CSUs) is $42 million. The societal cost of the adult fatalities is $15.4 million a year. The aggregated societal cost components for injuries provided by the ICM include medical costs, work losses, and the intangible costs associated with pain and suffering. The estimated injury costs for children are $16,085 per injury treated in a physician's office, $36,206 for injuries treated and released from a hospital ED, and $465,992 for hospital admitted injuries (average costs of injuries admitted to the hospital after an assessment at the ED, and those admitted to the hospital bypassing the ED). The overall average cost of injuries to adults is slightly lower than the average cost of injuries to children: $30,859 vs. $35,003. The total cost of deaths and injuries to both children and adults totals $449.61 million per year.

Benefits associated with the rule. Staff estimates that 83.9 percent of nonfatal CSU tip-over incidents involving children are addressable with the final rule.[117] Staff assessed that the ratio of nonfatal addressable incidents can be considered a reasonable estimate of the ratio of fatal addressable incidents; and used it as such in the estimation of benefits. CPSC staff was not able to estimate the exact portion of incidents involving adults that would be prevented. Instead, staff conservatively assumed that the final rule would prevent adult tip-over incidents at half the efficacy rate of child tip-over incidents, or 42 percent. Given these expected efficacy rates in

[116] For additional information about VSL, see Tab H of the final rule briefing package.
[117] These figures are similar to the addressability estimates calculated for the NPR. Staff calculated the ratio of nonfatal addressable incidents by the total number of nonfatal incidents for each age, and took the average of those percentages to calculate the aggregate nonfatal addressability. See Tab C of the final rule briefing package for discussion of what incidents staff considered addressable.

reducing the number of fatal and nonfatal incidents, when all CSUs in use comply with the performance standards, the annual societal benefits from the final rule would be $307.17 million. This total is comprised of $41.71 million in reduced deaths and $265.46 million in reduced injuries, as shown in Table 3.

Table 3. Summary of Expected Annual Benefits

Description	Annual Number of CSU Incidents (no TV)	Annual Societal Costs ($M)	Expected Efficacy of Standard	Expected Reduction in Incidents	Expected Annual Benefit ($M)
Fatalities	5.5	$57.40		4.0	$41.71
Children	4.0	$42.00	83.9%	3.4	$35.25
Adults	1.5	$15.40	42.0%	0.6	$6.46
Injuries	11,788	$392.21		7,828	$265.46
Children	6,867	$240.36	83.9%	5,763	$201.73
Adults	4,921	$151.85	42.0%	2,065	$63.73
Total	11,793	$449.61		7,832	$307.17

C. Costs Associated with the Rule

The costs associated with the rule include costs to manufacturers and importers, as well as costs to consumers. Costs to manufacturers and importers include the cost to redesign and modify CSUs to meet the requirements of the standard, testing CSUs for conformance, as well as the cost of the labor and materials required to produce compliant CSUs.

Costs of redesign and testing. Staff estimates that current conformance with the performance requirements in the final rule is very low. To comply with the final rule, most furniture manufacturers must produce updated designs that achieve the performance requirements of the final rule, and conduct testing to verify conformance. Manufacturers will also need to add stability-rating hang tags on each CSU, as well as provide the required certificates of compliance, identification label, and warning labels. Industry would incur the cost of redesigning CSUs once the rule takes effect as a one-time cost. Future models would use those redesigned features of the models created following implementation of the rule. Under the

assumption that, on average, 10,000 CSUs are produced of every CSU model, CPSC staff estimates that there will be a total of 6,334 existing CSU models that need to be redesigned during the first year of the rule.

Information provided by a large furniture manufacturer/retailer association indicated that it would take an average of 5 months to redesign one thousand different CSU models. CPSC staff assumed that a team of 20 full-time professionals, earning an average hourly compensation of $66.37[118], would work a total of 17,333 hours[119] to produce the updated designs of one thousand CSU models. This results in a cost per model of $1,150.41 for labor ($66.37 per hour × 17,333 hours ÷ 1,000 models). Therefore, manufacturers will redesign all existing models at a total cost of $7.29 million ($1,150.41 per model × 6,334 existing CSU models). To calculate cost of redesign cost per CSU, staff divided the total cost of redesign, $7.29 million, by the number of CSUs expected to be produced during that first year, estimated at 17.68 million. This equates to a redesign cost of $0.41 per CSU.

Model testing would recur annually, as all new models will have to be tested to verify compliance with the standard. The cost of CSU model testing is estimated at $711.46[120] per model as of the end of 2021. Using the assumption of 10,000 CSUs per model, average cost per model translates into a cost per CSU of around $0.071. In the first year of rule implementation, there will likely be a larger number of models to be tested, which prompted CPSC staff to round the average cost per CSU to $0.10.[121]

---

[118] Total hourly compensation for private service-providing industry workers in professional and related occupations as of the fourth quarter of 2021 from the Bureau of Labor Statistics compensation statistics.
[119] This is the result of 40 hours a week per full-employee times 20 employees, times 5 months of 4.33 weeks each (52 weeks a year / 12 months).
[120] A large furniture association provided an estimate of $700 per model testing. Staff assumed the estimate corresponded to September 2021, and updated it to December 2021 using the Consumer Price Index for All Urban Consumers.
[121] Additional competition for resources needed to perform a large number of tests within a short timeframe may create price pressures. To use a conservative estimate, staff rounded the per-unit test cost estimate to the next tenth.

Costs of labor and materials to increase CSU stability. CPSC staff has identified several CSU modifications that could increase the stability of the CSU. These are (1) adding interlock mechanisms to limit the number of drawers, pull-out shelves, or doors that can be opened at one time; (2) reducing the maximum drawer extensions; (3) extending the feet or front edge of the CSU forward; (4) various devices and methods to raise the front of the unit; and (5) adding additional weight to the back of the CSU. Manufacturers can use combinations of more than one of these methods, or any other methods they develop, to increase the stability of a CSU model.

The cost of an interlock mechanism includes the cost of design, materials, and labor required to manufacture an interlock adapted to the CSU model and install the mechanism into the CSU. Staff estimates the total cost of implementing interlock mechanisms, including labor, per CSU is $2.93 for CSUs that require a single interlock and up to $14.64 for CSUs that require more complex CSU mechanisms with significant redesign costs.

The cost of extending the feet or the front edge of the CSU forward can be very low. In some cases, no additional parts would be required, and the only cost would be the time it takes for the manufacturer to make the change in manufacturing procedure. In these cases, the cost of shifting the front edge forward could be less than $1 per unit. In other cases, feet might need to be added or redesigned at costs of up to $5 per CSU unit,[122] making the midpoint $3.

The cost of tipping the unit back by raising its front or providing adjustable leveling feet is estimated at $2.80 per CSU. CPSC staff estimated this cost based on information provided by one manufacturer – according to whom, the cost of devices to raise the front of the CSU could be as high as $5 per CSU; and, observed retail prices for leveling devices of 30 cents each, or $0.60 for a minimum of two devices needed to stabilize a CSU.

[122] Cost based on observed retail prices for furniture feet available on the Internet. These prices are likely much higher than the prices many manufacturers would be able to obtain for large scale volumes of production.

The cost of adding weight to a unit to improve its stability includes the cost of the additional materials, the cost of shipping heavier CSUs, and the cost of additional packing redesign and materials. Based on observed retail prices per pound of medium-density fiberboard costs, the average cost per additional pound is $0.24.[123] Staff estimated the average cost of additional shipping per pound at $0.16[124] for a total cost of $0.40 per additional pound of weight.

If the additional weight required is a few pounds, then companies only incur the cost of additional materials because minimal manufacturing changes would be needed, and it is unlikely additional packing materials would be required. When the additional weight required to make a CSU compliant is high, then additional packing materials would likely be required. CPSC staff applied a 5-pound threshold in applying additional cost for added weight. CSUs that added 5 pounds or more in additional weight incur an additional packing expense of $1.61[125] per CSU.

The manufacturing costs of reducing the maximum drawer extensions[126] is unquantified, but likely low[127] because it does not necessarily require additional parts[128] or labor time.

Summary of costs. As the NPR explained, staff assessed several CSUs that were representative of models involved in incidents and identified combinations of modifications that could be used to bring them into compliance with the rule. Considering those exemplar CSUs, the weighted average cost of labor and materials of all proposed modifications for the five

[123] Furniture manufacturers most likely would purchase materials at much less than retail prices; however, to produce conservative estimates, CPSC staff did not include cost improvements associated with large scales of production and/or sourcing of materials. The use of higher retail prices might also offset the higher cost associated with short-term supply-chain disruptions in commodities markets, as well as the potential use of more expensive materials, argued by a few furniture manufacturers and associations during the NPR comment period.
[124] See Tab H of the final rule briefing package for explanation of this.
[125] See Tab H of the final rule briefing package for explanation of this.
[126] Reducing the maximum drawer extensions will decrease the tip-over moment, as defined by the draft final rule, by reducing the effective amount of weight added to the front of the CSU fulcrum when opening a drawer.
[127] The largest cost is likely the unquantified potential impact on consumer utility from CSUs with drawers that cannot open as widely.
[128] Out-stop devices are discussed in the 2014 update of the ASTM F2057 as part of the evaluation of the operational sliding length: "In the absence of stops, the operational length is length measured from the inside back of the drawer to the inside face of the drawer front in its fully closed position with measurements taken at the shortest drawer depth dimension minus 3.5 in."

representative CSU models are between $9.70 and $17.13. CPSC staff added $0.51 for the cost of redesign and testing to the weighted average cost of labor and material to get the total production cost for a representative model. In total, incremental costs for the five representative models are between $10.21 and $17.64. These represent the incremental cost of the draft final rule. To calculate total annual costs, CPSC staff assumed equal share among the five representative models for the 17.68 million CSUs estimated to be produced in the first year of rule.[129] The total estimated annual cost of the final rule is $250.90 million.

Costs to consumers. The costs also include the costs and impacts on consumers. These include the loss of utility if certain desired characteristics or styles are no longer available, or if compliant CSUs are less convenient to use. The costs of designing, manufacturing, and distributing compliant CSUs would be initially incurred by the manufacturers and suppliers, but most of these costs would likely be passed on to the consumers via higher retail prices. The costs involving the loss of utility because CSUs with certain features or characteristics are no longer available would be borne directly by those consumers who desired CSUs with those characteristics or features, unless manufacturers design compliant models with those features.

D. Sensitivity Analysis

The benefits and costs of the draft final rule are estimates that depend upon a relatively high number of inputs and assumptions. The benefits, for instance, are dependent on the different sets of incidents considered in the analysis, the value of a statistical life, and the societal cost of the different type of injuries; the benefits per CSU are also influenced by the number of CSUs in use and the expected CSU lifecycle, among other considerations. The costs of the draft final rule are also dependent on inputs and assumptions. Costs are driven by the modifications required to

[129] Forecasted sales for 2023 are lower than 2021 sales due to staff considering sales for 2021 an aberration from the normal trend due to the recovery of the COVID-19 pandemic. Forecasted sales for 2023 follows pre-pandemic historical trends.

make the CSU compliant, the number of CSUs and CSU models, as well as other market variables. Some of these inputs and assumptions have a significant impact on the outcome of the analysis, while others are less significant.

In conducting the analysis, staff sought to use inputs and assumptions that best reflected reality. However, during the NPR comment period multiple commenters suggested that the analysis include alternative values for inputs and assumptions of significant uncertainty, as well as discuss the impacts of the trends observed over time in the data. Accordingly, staff examined the impact of using alternative values for some of the key inputs and assumptions of the analysis. Public comments suggested some of the alternative inputs used. See Tab H of the final rule briefing package for the sensitivity analysis.

E. Alternatives to the Rule

CPSC considered several alternatives to the rule. These alternatives, their potential costs and benefits, and the reasons CPSC did not select them, are described in detail in section **XI. Alternatives to the Rule**, below, and Tab H of the final rule briefing package.

XI. Alternatives to the Rule

The Commission considered several alternatives to reduce the risk of injuries and death related to CSU tip overs. However, as discussed below, the Commission concludes that none of these alternatives would adequately reduce the risk of injury.

A. No Regulatory Action

One alternative to the proposed rule is to take no regulatory action and, instead, rely on voluntary recalls, compliance with the voluntary standard, after-market anti-tip devices, and education campaigns. The Commission has relied on these alternatives to address the CSU tip-over hazard to date.

Between January 1, 2000 and July 1, 2022, 43 consumer-level recalls occurred in response to CSU tip-over hazards. The recalled products were responsible for 341 tip-over

incidents, including reports of 152 injuries and 12 fatalities, and affected approximately 21,530,000 CSUs. ASTM F2057 has included stability requirements for unloaded and loaded CSUs since its inception in 2000 and, based on CPSC testing, there is a high rate of compliance with the standard. In addition, CPSC's Anchor It! campaign—an education campaign intended to inform consumers about the risk of CSU tip overs, provide safety tips for avoiding tip overs, and promote the use of tip restraints—has been in effect since 2015.

Given that this alternative primarily relies on existing CPSC actions, the primary costs staff estimates for this alternative are associated with tip restraints. However, this alternative is unlikely to provide additional benefits to adequately reduce the risk of CSU tip overs. For one, CPSC does not consider ASTM F2057 adequate to address the hazard because it does not account for several factors involved in tip-over incidents that contribute to instability, including multiple open and filled drawers, carpeting, and forces generated by children's interactions with the CSU. In addition, numerous tip-over incidents have involved CSUs that comply with the ASTM standard.

In addition, as discussed in section **VII. Technical Analysis Supporting the Rule**,[130] several studies indicate that the rate of consumer anchoring of furniture, including CSUs, is low. As such, on their own, these options have limited ability to further reduce the risk of injury and death associated with CSU tip overs. CPSC's use of this alternative to date illustrates this since, despite these efforts, CSU tip-overs results in injuries and death continue to occur at a high rate.

B. Require Performance and Technical Data

Another alternative is to adopt a standard that requires only performance and technical data, similar to or the same as the hang tag requirements in the rule, with no performance requirements for stability. This could consist of a test method to assess the stability of a CSU

[130] For more details about the consumer use study and consumer anchoring of furniture, see Tab C of the NPR briefing package.

model, a calculation for determining a stability rating based on the test results, and a requirement that the rating be provided for each CSU on a hang tag. A stability rating would give consumers information on the stability of CSU models they are considering, to inform their buying decisions, and potentially give manufacturers an incentive to achieve a higher stability rating to increase their competitiveness or increase their appeal to consumers that desire more stable CSUs. The hang tag could also connect the stability rating to safety concerns, providing consumers with information about improving stability.

Because this alternative would not establish a minimum safety standard, it would not require manufacturers to discontinue or modify CSUs. Therefore, the only direct cost of this alternative would be the cost to manufacturers of testing their CSUs to establish their stability rating and labeling their CSUs in accordance with the required information. Any changes in the design of the CSUs would be the result of manufacturers responding to changes in consumer demand for particular models.

However, the Commission does not consider this alternative adequate, on its own, to reduce the risk of injury from CSU tip overs. Similar to tip restraints, this alternative relies on consumers, rather than making CSUs inherently stable. This assumes that consumers will consider the stability rating, and accurately assess their need for more stable CSUs. However, this is not a reliable approach to address this hazard, based on the low rates of anchoring, and the FMG focus group, which suggests that caregivers may underestimate the potential for a CSU to tip over, and overestimate their ability to prevent tip overs by watching children. In addition, this alternative would not address the risk to children outside their homes (where the stability of CSUs may not have been considered), or CSUs purchased before a child's birth. The long service life of CSUs and the unpredictability of visitors or family changes in that timespan, and these potential future risks might not be considered at the time of the original purchase.

C. Adopt a Performance Standard Addressing 60-Pound Children

Another alternative is to adopt a mandatory standard with the same requirements as the rule, but addressing 60-pound children, rather than 51.2-pound children. This alternative would be more stringent than the rule. About 74 percent of CSU tip-over injuries to children involve children 4 years old and younger,[131] and these are addressed by the proposed rule, because the 95th percentile weight for 4-year-old children is approximately 52 pounds. The rule would also address some of the injuries to children who are 5 and 6 years old, as well, because many of these children also weigh less than 51.2 pounds. Mandating a rule that would protect 60-pound children would increase the benefits associated with the rule by further reducing injuries and fatalities. Presumably, the cost of manufacturing furniture that complies with this more rigorous alternative would be somewhat higher than the costs of manufacturing CSUs that comply with the rule, using similar, but somewhat more extensive modifications. Because this alternative would provide only a limited increase in benefits, but a higher level of costs than the rule, the Commission did not select this alternative.

D. Mandate ASTM F2057 with a 60-Pound Test Weight

Another alternative would be to mandate a standard like ASTM F2057-19, but replace the 50-pound test weight with a 60-pound test weight. Sixty pounds approximately represents the 95th percentile weight of 5-year-old children, which is the age ASTM F2057-19 claims to address. This alternative was discussed in the ANPR.

This alternative would be less costly than the rule, because, based on CPSC testing, about 57 percent of CSUs on the market would already meet this requirement. The cost of modifying CSUs that do not comply is likely to be less than modifying them to comply with the rule, which is more stringent. By increasing the test weight, it is possible that this alternative would prevent

[131] Based on NEISS estimates for 2015 through 2019.

some CSU tip overs. However, this alternative would not account for the factors that occur during CSU tip-over incidents that contribute to instability, including multiple open and filled drawers, carpeting, and the horizontal and dynamic forces from children's interactions with the CSU. As this preamble and the NPR briefing package explain, a 60-pound test weight does not equate to protecting a 60-pound child. The UMTRI study demonstrates that children generate forces greater than their weight during certain interactions with a CSU, including interactions that are common in CSU tip-over incidents. Because this alternative does not account for these factors, staff estimates that it may only protect children who weigh around 38 pounds or less, which is approximately the 75th percentile weight of 3-year-old children. For these reasons, this alternative would not adequately reduce the CSU tip-over hazard, and so the Commission did not select this alternative.

E. Wait for Potential Update to ASTM F2057

Another alternative would be to wait for ASTM to finalize a new version of ASTM F2057. At that point, the Commission could rely on the voluntary standard, in lieu of rulemaking; mandate compliance with the voluntary standard if the voluntary standard was likely to adequately reduce the risk of injury but there was not substantial compliance with it; or mandate the requirements that have been considered for the potential new ASTM standard.

This alternative may reduce costs associated with the rule because the provisions in the draft version of the ASTM standard are generally less stringent than those in this rule. As such, they would require less cost for labor and materials, and more CSUs would comply with the standard without modifications. ASTM balloted possible changes to the ASTM F2057 standard in May 2022 and July 2022. However, as of September 2022, ASTM has not finalized a new version of the standard and CPSC staff have submitted letters and votes indicating that the balloted revisions would not adequately address the tip-over hazards. As such, CPSC does not know whether ASTM will update the standard or what specific provisions the update would

contain, if issued; has concerns about the current draft of the update; and does not know what level of compliance there would be with an updated standard. Therefore, continuing to wait for ASTM would delay the benefits of the rule, and the current draft revisions may not be adequate to address the hazard, even if they are adopted.

F. Later Effective Date

Another alternative would be to provide a later effective date than the 180-day implementation period provided in the rule. A later effective date could reduce the costs associated with the rule and mitigate potential disruption to the supply chain. However, delaying the effective date would delay the safety benefits of the rule as well. Furthermore, section 9 of the CPSA specifies that, in general, 180 days is the longest effective date permissible for such rules. *See* 15 U.S.C. 2058(g)(1). As such, the Commission did not select this alternative.

XII. Paperwork Reduction Act

This rule contains information collection requirements that are subject to public comment and review by the Office of Management and Budget (OMB) under the Paperwork Reduction Act of 1995 (PRA; 44 U.S.C. 3501–3521). The preamble to the proposed rule discussed the information collection burden of the proposed rule and specifically requested comments on the accuracy of CPSC's estimates. 87 FR 6246 (Feb. 3, 2022). The estimates included the time for preparing and providing required markings and labels as well as performance and technical information required on hang tags. These requirements fall within the definition of "collection of information," as defined in 44 U.S.C. 3502(3).

OMB has assigned control number 3041-0191 to this information collection. CPSC did not receive any comments regarding the information collection burden in the NPR through OMB. CPSC received one comment, through the docket for this rulemaking on www.regulations.gov, that stated that producing the hang tag in a foreign country and shipping it would be difficult to achieve during the 30-day effective date proposed in the NPR. However, in

response to comments and other considerations, the final rule provides a 180-day effective date. CPSC also received comments and obtained additional information regarding economic considerations, which resulted in the final rule updating the number of estimated manufacturers and CSUs. The final rule also includes requirements for online hang tags, which were not specified in the NPR; however, these requirements are not expected to create additional economic burdens because they can be addressed by simply adding a soft copy of the physical design to the manufacturer website.

Accordingly, the estimated burden of this collection of information is modified, as follows:

Title. Safety Standard for Clothing Storage Units

Summary of information collection. The consumer product safety standard prescribes the safety requirements, including labeling or marking and hang tag requirements, for CSUs. These requirements are intended to reduce or eliminate an unreasonable risk of death or injury to consumers from CSU tip overs.

Requirements for marking and labeling, in the form of warning labels or markings, and requirements to provide performance and technical data by labeling, in the form of a physical and online hang tag, will provide information to consumers. Warning labels or markings on CSUs will provide warnings to the consumer regarding product use. Hang tags will provide information to the consumer regarding the stability of the unit. These requirements fall within the definition of "collection of information," as defined in 44 U.S.C. 3502(3).

Section 27(e) of the CPSA authorizes the Commission to require, by rule, that manufacturers of consumer products provide to the Commission performance and technical data related to performance and safety as may be required to carry out the purposes of the CPSA, and to give notification of such performance and technical data at the time of original purchase to prospective purchasers and to the first purchaser of the product. 15 U.S.C. 2076(e). Section 2 of

the CPSA provides that one purpose of the CPSA is to "assist consumers in evaluating the comparative safety of consumer products." 15 U.S.C. 2051(b)(2).

Section 14 of the CPSA requires manufacturers, importers, or private labelers of a consumer product subject to a consumer product safety rule to certify, based on a test of each product or a reasonable testing program, that the product complies with all rules, bans or standards applicable to the product. The final rule for CSUs specifies the test procedure be used to determine whether a CSU complies with the requirements. For products that manufacturers certify, manufacturers would issue a general certificate of conformity (GCC). For CSUs that are children's products, the certification must be based on testing by an accredited third-party conformity assessment body.

Identification and labeling requirements will provide information to consumers and regulators needed to locate and recall noncomplying products. Identification and labeling requirements include content such as the name and address of the manufacturer.

Warning labels or markings will provide information to consumers on hazards and risks associated with product use. Warning label or marking requirements specified in the final rule include size, content, format, location, and permanency.

The standard requires that CSU manufacturers provide technical information for consumers on a hang tag at the time of original purchase (see discussion elsewhere in this preamble for details on these requirements).[132]

The requirements for the GCC are stated in section 14 of the CPSA. Among other requirements, each certificate must identify the manufacturer or private labeler issuing the

[132] The online hang tag is an additional requirement, not specified in the NPR. However, because hang tags must exactly match the figure provided in the regulation, the same design would be used for both physical and online hang tags. Therefore, the economic burden of the online hang tags is only the cost of adding a picture per model to the manufacturer website, and the virtual space required to post the hang tags. CPSC considers these costs to be small, or practically negligible for the purpose of estimating the burden of this information collection.

certificate and any third-party conformity assessment body, on whose testing the certificate depends; the date and place of manufacture; the date and place where the product was tested; each party's name, full mailing address, telephone number, and contact information for the individual responsible for maintaining records of test results. The certificates must be in English. The certificates must be furnished to each distributor or retailer of the product and to CPSC, if requested.

Respondents and frequency. Respondents include manufacturers and importers of CSUs, many of which are considered small private firms. More than 3 thousand manufacturers and close to 18 thousand importers will have to comply with the information collection requirements when the CSUs are manufactured or imported; this is addressed further in the discussion of estimated burden. CPSC estimates that more than 95 percent of respondents that will have to comply with the information collection requirements are small firms.

Estimated burden. CPSC has estimated the respondent burden in hours and the estimated labor costs to the respondent. The hourly burden for labeling includes designing the label and the hang tag that will be used for each model, physically attaching the label and hang tag to each CSU, and, where applicable, posting the hang tag online. Additionally, the burden for third-party testing is estimated for a subset of CSUs that are children's products.

Manufacturers will have to place a hang tag on each CSU sold. CPSC staff estimated that there were 20.64 million units sold in 2021. This would be a reasonable estimate of the number of responses per year.[133] CPSC estimates that there are about 6,365 different models of CSUs in use. The estimated number of models in use was also updated in the final rule.[134]

[133] The final rule updated the estimate of number of CSUs sold in the United States, based on new data from commenters and from additional staff analysis.
[134] The changes in the final rule to estimates of U.S. sales of CSUs and models in use reduced the estimated respondent burden by about half as compared to the ICR for the proposed rule.

Estimate of Respondent Burden. The hourly reporting burden imposed on firms includes the time it will take them to design and update hang tags, and identification labeling, including warning labels, as well as the hourly burden of attaching them to all CSUs sold domestically.

Table 4: Estimated Annual Reporting Burden.

Burden Type	Type of Supplier	Total Annual Reponses	Length of Response	Annual Burden (hours)
Labeling, design and update	Manufacturer or Importer	2,122	60 min.	2,122
Labeling, attachment	Manufacturer, Importer, or Retailer	20.64 million	.06 min.	20,640
Total Labeling Burden				**22,762**
Third-party recordkeeping, certification	Manufacturers of Children's CSUs	21	3 hours	63
Total Hourly Burden				**22,825**

CPSC estimates that it could take an hour for a supplier to design the hang tags and labeling or marking per CSU model, and that the design could be used for a period of three years, or until the CSU is redesigned.[135] At 60 minutes per hang tag design, the hourly burden for designing a hang tag that will be used for three years is 20 minutes per year; or equivalently, it could be assumed that one third of all CSU models are redesigned each year (2,122 or 6,365 ÷ 3 years). Therefore, the annual burden would be 2,122 hours at a burden of one hour per CSU model.

CPSC estimates it could take 0.06 minutes (3.6 seconds or 1,000 hang tags per hour) for a supplier to attach the hang tag to the CSU, for each of the 20.64 million units sold in the United States annually. Attaching the hang tag to the CSU would amount to an hourly burden of 20,640 hours (0.06 min × 20,640,000 CSUs / 60 mins per hour).

[135] The lifespan of a CSU model was reduced from five years in the NPR to three years in the final rule. This update takes into consideration an accelerating trend in furniture design that demands new designs with a much higher frequency, in some cases even on a yearly basis.

In addition, three types of third-party testing of children's products are required: certification testing, material change testing, and periodic testing. Requirements state that manufacturers conduct sufficient testing to ensure that they have a high degree of assurance that their children's products comply with all applicable children's product safety rules before such products are introduced into commerce. If a manufacturer conducts periodic testing, it is required to keep records that describe how the samples of periodic testing are selected. The hour burden of recordkeeping requirements will likely vary greatly from product to product, depending on such factors as the complexity of the product and the amount of testing that must be documented. Therefore, estimates of the hour burden of the recordkeeping requirements are somewhat speculative.

CPSC estimates that up to 1 percent of all CSUs models sold annually,[136] or 21 CSUs, are children's products and would be subject to third-party testing, for which 3 hours of recordkeeping and record maintenance will be required. Thus, the total hourly burden of the recordkeeping associated with certification is 63 hours (3 × 21).

Labor Cost of Respondent Burden. According to the U.S. Bureau of Labor Statistics (BLS), Employer Costs for Employee Compensation, the total compensation cost per hour worked for all private industry workers was $38.61 (March 2022, Table 4, https://www.bls.gov/news.release/archives/ecec_06162022.pdf). Based on this analysis, CPSC staff estimates that the labor cost of respondent burden would impose a cost to industry of approximately $881,273 annually (22,825 hours × $38.61 per hour = $881,273.25).

Respondent Costs Other Than Burden Hour Costs. In addition to the labor burden costs addressed above, the hang tag requirement imposes capital costs for cardstock used for each hang tag to be displayed and the wire or string used to attach the hang tag to the CSU. CPSC

[136] CPSC updated its estimate of the proportion of CSU models that are children's products, broadly based on an online search of available CSU models for children.

estimates the cost of the printed hang tag and wire for attaching the hang tag to the CSU will be about $0.10. Therefore, the total cost of materials to industry would be about $2.06 million per year ($0.10 × 20.64 million units).

Most domestic firms that are expected to manufacture or import CSUs subject to the final rule are small businesses. CPSC provides a variety of resources to help both new and experienced small businesses learn about safety requirements that apply to consumer products, including the CPSC Regulatory Robot, small business education videos, and the Small Business Ombudsman. Many of these resources can be accessed online at: https://www.cpsc.gov/Business--Manufacturing/Small-Business-Resources. Small firms can reach the Small Business Ombudsman by calling (888) 531-9070.

Cost to the Federal Government. The estimated annual cost of the information collection requirements to the federal government is approximately $4,304, which includes 60 staff hours to examine and evaluate the information as needed for Compliance activities. This is based on a GS-12, step 5 level salaried employee. The average hourly wage rate for a mid-level salaried GS-12 employee in the Washington, DC metropolitan area (effective as of January 2022) is $48.78 (GS-12, step 5). This represents 68.0 percent of total compensation (U.S. Bureau of Labor Statistics, "Employer Costs for Employee Compensation," March 2022, Table 2, percentage of wages and salaries for all civilian management, professional, and related employees: https://www.bls.gov/news.release/archives/ecec_06162022.pdf). Adding an additional 32.0 percent for benefits brings average annual compensation for a mid-level salaried GS-12 employee to $71.74 per hour. Assuming that approximately 60 hours will be required annually, this results in an annual cost of $4,304 ($71.74 per hour × 60 hours = $4,304.40).

XIII. Final Regulatory Flexibility Analysis[137]

Whenever an agency is required to publish a proposed rule, the Regulatory Flexibility Act (5 U.S.C. 601-612) generally requires that the agency prepare an initial regulatory flexibility analysis (IRFA) for the NPR and a final regulatory flexibility analysis (FRFA) for the final rule. 5 U.S.C. 603, 604. These analyses must describe the impact that the rule would have on small businesses and other entities. The FRFA must contain:

(1) a statement of the need for and objectives of the rule;

(2) significant issues raised by commenters on the IRFA, the agency's assessment of those issues, and changes made to the result as a result of the comments;

(3) a response to comments filed by the Chief Counsel for Advocacy of the U.S. Small Business Administration (Advocacy), and changes made as a result of those comments;

(4) a description and estimate of the number of small entities to which the rule will apply;

(5) a description of the projected reporting, recordkeeping and other compliance requirements of the rule, including an estimate of the classes of small entities which will be subject to the requirement and the type of professional skills necessary for preparation of the report or record; and

(6) steps the agency has taken to minimize the significant economic impact on small entities, consistent with the objective of the applicable statute, including the factual, policy, and legal reasons for selecting the alternative in the final rule and why other alternatives were rejected.

[137] Further details about the final regulatory flexibility analysis are available in Tab I of the final rule briefing package. Additional information about costs associated with the rule are available in Tab H of the final rule briefing package. *See also* Tabs H and I of the NPR briefing package for additional details.

A. Need for and Objectives of the Rule

The final rule would establish mandatory performance requirements for CSUs. The purpose of the final rule is to reduce the risks of death and serious injury from CSU tip overs.

B. Comments on the IRFA

CPSC received comments on the substantive requirements in the proposed rule. CPSC also received comments on the costs and benefits calculations presented in the preliminary regulatory analysis and IRFA, the cost and benefit impacts of the scope and effective date of the proposed rule, and other possible economic impacts of the rule, including economic impacts on firms, the utility of the product for consumers, hazard costs associated with the product, and alternative actions that the Commission could take. A summary of the comments, CPSC staff's assessment of them, and changes to the final rule as a result of comments, are discussed in section **VIII. Response to Comments** of this preamble and Tab K of the final rule briefing package. To summarize, based on comments relevant to economic considerations, the final rule extends the effective date of the rule to 180 days and excludes from the scope of the rule lightweight CSUs if the combined weight of the CSU and the contents of filled drawers is less than 57 pounds. These changes should reduce the costs associated with compliance with the rule for businesses of all sizes. The change in the effective date will give businesses more time to manufacture CSUs that are compliant with the rule. The exclusion of lightweight units from the scope of the rule means that manufacturers of those units, which represent about 10 percent of U.S. annual sales of CSUs by number of units, will not need to test for compliance with this rule, or provide a certificate of compliance with this rule. Staff made other clarifying changes on scope and test methods that should make it more clear how companies of all sizes must comply with the rule, but that should not impact either costs or benefits.

C. Comments from Advocacy

Advocacy filed comments on the proposed rule. Advocacy commented: "CPSC should consider reasonable alternatives to the proposed rule that would ease the burden on small businesses while still meeting the Commission's stated objectives" and described specific issues and concerns raised by small businesses, including manufacturers, importers, and retailers. Alternatives to the proposed rule, and their expected impact on small businesses, were discussed in the IRFA and Preliminary Regulatory Analysis that accompanied the NPR and are also discussed in this preamble. The issues raised by Advocacy, and CPSC's response are as follows.

Comment: Advocacy stated that "CPSC's Initial Regulatory Flexibility Act analysis underestimates the impact the proposed rule will have on small businesses." Advocacy also noted that almost all of the industry is small businesses, adding: "One small importer estimated that additional packing materials and costs plus the increased shipping weight will drive up per unit costs by 44 percent. This does not include costs to test the CSUs or ship them to third parties for testing, nor does it include the cost increases this importer's suppliers will incur in the manufacturing process. Other small manufacturers and importers reported similar estimates of the impacts of the proposed rule, stating that the costs will increase approximately 30-40 percent. These small businesses report that an increase of this magnitude will put many of them out of business." Advocacy also expressed concern that the rule would impact small retailers, because the compliant CSUs would be so heavy the units would injure the delivery drivers.

Response: The economic analyses have been revised to reflect these and other commenters' input on costs of compliance. This rule does not require third-party testing, except for CSUs that are children's products, which are already subject to third-party testing requirements. In addition, the assumptions of higher costs by Advocacy and others were based on increased costs for shipping and packaging, assuming that compliance with the performance standard is achieved by adding weight to the CSU, which is not required by the final rule. The

regulation is a performance standard, not a design standard; and as discussed in the Final Regulatory Analysis, there are multiple ways to comply with the final rule that may not involve adding weight to the unit. Suppliers can select the lowest-cost option to achieve compliance, which, in some cases, will likely be interlock hardware or foot extensions that add minimal weight to the unit, or one of those options in combination with added weight. Thus, there are many options to achieve compliance where shipping and packaging cost increases could be minimal, if any. Additionally, Advocacy did not provide data to demonstrate these costs of compliance would disproportionately affect small businesses.

Advocacy provided an estimate of the total cost to small businesses of 30 percent to 40 percent above current costs, but it did not provide any specific breakdown of increased costs to small manufacturers or importers from components, redesign, packaging, and shipping. This estimate is on the high end of the range of estimates provided by other commenters, primarily trade associations and large businesses, that did provide a breakout of increased costs for components, redesign, shipping, and packaging. Larger businesses and trade associations that provided comments generally assumed that wholesale prices would rise to cover costs of compliance, and they also assumed that retail prices would rise to cover all or nearly all of the increased cost to manufacturers and importers. It is unlikely, given that large suppliers apparently plan to raise prices to cover the cost of compliance, that small suppliers would not be able to pass any of the cost of regulatory compliance on to retail customers, as is implied by Advocacy's comments. That would only occur if demand were highly elastic (any price increase would cause demand to drop sharply), so suppliers are unable to pass any of the cost of compliance on to retail consumers. The Final Regulatory Analysis assumes that both small and large suppliers will be able to cover some or all of the compliance costs of the rule by raising wholesale prices, which, in turn, will result in higher retail prices. The deadweight loss analysis portion of the Final Regulatory Analysis discusses that some manufacturers may exit the market

because their increased marginal costs will exceed the price consumers are willing to pay for their product.

An industry trade association commenter noted that more than 90 percent of CSUs sold in the United States are imported. This means that very few U.S. manufacturers will directly bear the cost of redesign or testing, which, instead, will fall on foreign manufacturers. Small importers will be able to choose a compliant foreign supplier for their products, rather than incur the cost of redesign themselves, although the cost of compliance will likely be reflected in the wholesale cost. The economies of scale for larger manufacturers, as compared to small manufacturers, may not be an issue in a U.S. industry that is primarily importers, not manufacturers.

On specifics of shipping costs, the Final Regulatory Analysis includes an estimate of shipping furniture with added weight for an average of 16 cents per additional pound, which is highly unlikely to add 30 percent to the cost of a unit, given the average retail price of a CSU is estimated to be $338.50. Again, adding weight to the unit is not required by the final rule, and suppliers are free to choose a different compliance method that does not add significant weight to the unit, such as drawer interlocks or foot extensions.

On the issue of economies of scale for any specific technology for compliance, while it is possible that large manufacturers would have a lower cost per unit for the components, due to economies of scale, no small manufacturers provided specific price data on this issue. Again, an industry trade association noted that nearly all (more than 90 percent) of the CSUs sold in the United States are imported, so it will largely be foreign manufacturers who decide the best way to achieve compliance with the standard in the most cost-effective way.

Comment: Advocacy stated that "CPSC should consider a later effective date for the rulemaking, and in the interim require small businesses to educate and assist consumers with existing product safety options." They also stated that "small businesses will not have enough time to redesign their products to comply with the proposed requirements. Small businesses that

import products will incur additional difficulties due to existing supply chain disruptions, as well as normal lead times required for some of these products."

Response: The final rule effective date is 180 days after the publication of the rule, rather than 30 days after, as proposed in the NPR. Advocacy provided no data about why small businesses would find the effective date a greater burden than larger businesses. Given that most CSUs are imported, not manufactured domestically, it is unclear whether small importers would find the effective date more burdensome than large importers. In fact, the rule's effective date may temporarily disproportionally benefit U.S. manufacturers, including small manufacturers, who will have shorter shipping times for units manufactured in the United States than importers of any size.

Comment: Advocacy commented that "CPSC should reconsider its two proposed testing methods, as they produce different results that may be confusing for consumers and small businesses alike."

Response: The final rule has been revised so that only one of the test methods applies to any given CSU (this change is discussed in detail in section **IX. Description of and Basis for the Rule**).

Comment: Advocacy commented that "CPSC should consider updating existing voluntary standards if it is appropriate to do so" and that "updating existing standards will ensure that industry has a voice in the process, which may help in minimizing the impacts to small businesses."

Response: Other commenters representing large businesses and trade associations had similar comments favoring the alternative of voluntary standards. Advocacy did not provide data or any detailed information that would lead staff to conclude that adopting the voluntary standard would minimize the impacts on small businesses, or provide adequate levels of safety for consumers. As explained in this preamble, staff has reviewed existing standards that address

CSU instability and concluded that they do not adequately reduce the risk of injury. The Commission does not consider it appropriate to continue to wait for ASTM to update the standard, particularly since the updates under consideration may not adequately address the risk. Finally, a voluntary standard does not require compliance. Even if ASTM were to develop an effective standard, the level of compliance would be relevant to whether it would be as effective as the mandatory draft final rule.

Comment: Advocacy commented that "CPSC should clarify that once a product has been tested and certified, small importers and retailers may rely on that certification without incurring additional testing costs."

Response: Parts 1109 and 1110 of CPSC's regulations include requirements for relying on component part testing or certification and for certificates of compliance. Once a product has been tested and certified, importers and retailers of any size may rely on the certificate of compliance as evidence that the product has met the testing and certification requirements. This applies to both children's products (for which 16 CFR part 1109 applies) and general use products (for which 16 CFR part 1110 applies).

D. Small Entities to Which the Rule Will Apply

The final rule would affect firms or individuals that manufacture or import CSUs that fall within the scope of the rule. Therefore, the rule would apply to small entities that manufacture or import CSUs. As discussed in the IRFA that accompanied the NPR, manufacturers of CSUs are principally classified in the North American Industrial Classification (NAICS) category 337122 (non-upholstered wood household furniture manufacturing) but may also be categorized in NAICS codes 337121 (upholstered household furniture manufacturing), 337124 (metal household furniture manufacturing), or 337125 (household furniture (except wood and metal) manufacturing). According to data from the U.S. Census Bureau, in 2019, there were a total of 3,303 firms classified in these four furniture categories. Of these firms, 1,992 were primarily

categorized in the non-upholstered wood furniture category. More than 99 percent of the firms primarily categorized as manufacturers of non-upholstered wood furniture would be considered small businesses, as were 97 percent of firms in the other furniture categories, according to the U.S. Small Business Administration's size standards.[138] These categories are broad and include manufacturers of other types of furniture, such as tables, chairs, bed frames, and sofas. It is also likely that not all the firms in these categories manufacture CSUs. Production methods and efficiencies vary among manufacturers; some make use of mass production techniques, and others manufacture their products one at a time, or on a custom-order basis.

Sixty-seven percent of the value of apparent consumption of non-upholstered wood furniture (net imports plus domestic production for the U.S. market) in 2020 was comprised of imported furniture, and the share held by imports has grown in recent years (up from 56 percent in 2017). Although CSUs are not reported as a separate category by the U.S. Department of Commerce, an even greater proportion of CSUs purchased by U.S. consumers could be imported. An industry trade association commented on the proposed rule, noting that more than 90 percent of CSUs sold in the United States are imported products. Firms that import CSUs would also be impacted by the final rule, because imported CSUs would have to comply with the standards; although, as noted above, importers may rely on a certificate of compliance from the foreign manufacturer.

The final rule would apply to products manufactured after the effective date of the rule. As such, the rule would not directly apply to retailers, unless they are also manufacturers or importers. However, because retailers may be indirectly affected by changes made by manufacturers or importers, staff also considered the effects of the rule on retailers. Under the NAICS classification system, importers are classified as either wholesalers or retailers. Furniture

[138] *Table of Small Business Size Standards Matched to North American Industry Classification System Codes*, available at: http://www.sba.gov/sites/default/files/files/Size_Standards_Table.pdf.

wholesalers are classified in NAICS category 423210 (Furniture Merchant Wholesalers). According to the Census Bureau data, in 2019, there were 4,824 firms involved in household furniture importation and distribution. A total of 4,609 of these wholesalers (or 96 percent) are classified as small businesses because they employ fewer than 100 employees (which is the SBA size standard for NAICS category 423210). Furniture retailers are classified in NAICS category 442110 (Furniture Stores). According to the Census Bureau, there were 13,142 furniture retailers in 2019. The SBA considers furniture retailers to be small businesses if their gross revenue is less than $20.5 million. Using these criteria, at least 97 percent of the furniture retailers are small (based on revenue data from the 2012 Economic Census of the United States). Wholesalers and retailers may obtain their products from domestic sources or import them from foreign manufacturers. Retailers would be indirectly impacted by this rule only to the extent that they would need to buy compliant units from manufacturers or importers. Retailers can increase the retail price of units to reflect any increase in their wholesale costs and to maintain their profit margin. However, given that demand is responsive to price (somewhat elastic), it is possible that retailers will see lower sales of CSUs. Given that most furniture stores sell a wide mix of furniture and accessory products, it is unlikely that any indirect impact of this rule on small retailers would be substantial (more than 1 percent of annual revenue).

E. Projected Reporting, Recordkeeping, and Other Compliance Requirements

The final rule establishes a mandatory standard that all CSUs must meet to be sold in the United States. The requirements in the rule are discussed in this preamble and include stability testing requirements, warning and identification label requirements, hang tag requirements, stockpiling limits, and certification requirements.

As discussed above, most of the entities to which the rule would apply are small businesses. No specialized professional skills or training are needed for the preparation of the record of compliance. CPSC's public website provides guidance on how to create a certificate of

compliance, and an example one-page certificate.[139] CSU suppliers already would have had to provide such a general certificate of compliance for other applicable CPSC regulations, such as lead paint, so this rule should not require any new skills or training for certificates of compliance. The compliance testing requirements are described in detail this notice and many suppliers are already performing similar tests to demonstrate compliance with the voluntary standard. Third-party testing is not required, except for CSUs that are also children's products. The text and graphics for the required labels and hang tags are provided in the rule, so a graphics designer will not be required to make the labels and hang tags. Because the Commission is issuing the hang tag requirement under section 27(e) of the CPSA, a regulatory analysis or regulatory flexibility analysis is not required. However, the cost of hang tags will be about 10 cents for materials and less than a minute of labor to attach to the unit. As noted earlier, the labeling or marking of the unit should have similarly minor costs for manufacturing.

F. Steps Taken to Minimize Significant Impacts on Small Entities

As discussed in section **XI. Alternatives to the Rule**, CPSC examined several alternatives to the rule, which could reduce the burden on firms, including small entities. Because most domestic firms that are expected to manufacture or import CSUs subject to the final rule are small businesses, an exemption for small manufacturers/importers is not a feasible alternative. As described in section **XI. Alternatives to the Rule**, the Commission concluded that the additional alternatives would not adequately reduce the risk of injury and death associated with CSU tip overs and did not select those alternatives. The Commission did, however, extend the effective date for the rule to 180 days, which was an alternative discussed in the NPR. This will likely reduce burdens on firms of all sizes.

[139] Available at: https://www.cpsc.gov/Business--Manufacturing/Testing-Certification/General-Certificate-of-Conformity-GCC.

XIV. Incorporation by Reference

This rule incorporates by reference ASTM F2057-19. The Office of the Federal Register (OFR) has regulations regarding incorporation by reference. 1 CFR part 51. Under these regulations, in the preamble, an agency must summarize the incorporated material and discuss the ways in which the material is reasonably available to interested parties or how the agency worked to make the materials reasonably available. 1 CFR 51.5(a). In accordance with the OFR requirements, section **IX. Description of and Basis for the Rule** of this preamble summarizes the provisions of ASTM F2057-19 that the Commission incorporates by reference.

The standard is reasonably available to interested parties and interested parties can purchase a copy of ASTM F2057-19 from ASTM International, 100 Barr Harbor Drive, P.O. Box C700, West Conshohocken, PA 19428-2959 USA; telephone: 610-832-9585; www.astm.org. Once this rule takes effect, a read-only copy of the standard will be available for viewing on the ASTM website at: https://www.astm.org/READINGLIBRARY/. Interested parties can also schedule an appointment to inspect a copy of the standard at CPSC's Office of the Secretary, U.S. Consumer Product Safety Commission, 4330 East West Highway, Bethesda, MD 20814, telephone: 301-504-7479; e-mail: cpsc-os@cpsc.gov.

XIV. Testing, Certification, and Notice of Requirements

Section 14(a) of the CPSA includes requirements for certifying that children's products and non-children's products comply with applicable mandatory standards. 15 U.S.C. 2063(a). Section 14(a)(1) addresses required certifications for non-children's products, and sections 14(a)(2) and (a)(3) address certification requirements specific to children's products.

A "children's product" is a consumer product that is "designed or intended primarily for children 12 years of age or younger." *Id.* 2052(a)(2). The following factors are relevant when determining whether a product is a children's product:

- manufacturer statements about the intended use of the product, including a label on the product if such statement is reasonable;
- whether the product is represented in its packaging, display, promotion, or advertising as appropriate for use by children 12 years of age or younger;
- whether the product is commonly recognized by consumers as being intended for use by a child 12 years of age or younger; and
- the Age Determination Guidelines issued by CPSC staff in September 2002, and any successor to such guidelines.

Id. "For use" by children 12 years and younger generally means that children will interact physically with the product based on reasonably foreseeable use. 16 CFR 1200.2(a)(2). Children's products may be decorated or embellished with a childish theme, be sized for children, or be marketed to appeal primarily to children. *Id*. 1200.2(d)(1).

As discussed above, some CSUs are children's products and some are not. Therefore, this rule requires CSUs that are not children's products to meet the certification requirements under section 14(a)(1) of the CPSA and requires CSUs that are children's products to meet the certification requirements under section 14(a)(2) and (a)(3) of the CPSA. The Commission's requirements for certificates of compliance are codified at 16 CFR part 1110.

Non-children's products. Section 14(a)(1) of the CPSA requires every manufacturer (which includes importers[140]) of a non-children's product that is subject to a consumer product safety rule under the CPSA or a similar rule, ban, standard, or regulation under any other law enforced by the Commission to certify that the product complies with all applicable CPSC-enforced requirements. 15 U.S.C. 2063(a)(1).

[140] The CPSA defines a "manufacturer" as "any person who manufactures or imports a consumer product." 15 U.S.C. 2052(a)(11).

Children's products. Section 14(a)(2) of the CPSA requires the manufacturer or private labeler of a children's product that is subject to a children's product safety rule to certify that, based on a third-party conformity assessment body's testing, the product complies with the applicable children's product safety rule. *Id.* 2063(a)(2). Section 14(a) also requires the Commission to publish a notice of requirements (NOR) for a third-party conformity assessment body (*i.e.*, testing laboratory) to obtain accreditation to assess conformity with a children's product safety rule. *Id.* 2063(a)(3)(A). Because some CSUs are children's products, the rule is a children's product safety rule, as applied to those products.

The Commission published a final rule, codified at 16 CFR part 1112, entitled *Requirements Pertaining to Third Party Conformity Assessment Bodies*, which established requirements and criteria concerning testing laboratories. 78 Fed. Reg. 15836 (Mar. 12, 2013). Part 1112 includes procedures for CPSC to accept a testing laboratory's accreditation and lists the children's product safety rules for which CPSC has published NORs. When CPSC issues a new NOR, it must amend part 1112 to include that NOR. Accordingly, this rule amends part 1112 to add this standard for CSUs to the list of children's product safety rules for which CPSC has issued an NOR.

Testing laboratories that apply for CPSC acceptance to test CSUs that are children's products for compliance with the new rule would have to meet the requirements in part 1112. When a laboratory meets the requirements of a CPSC-accepted third party conformity assessment body, the laboratory can apply to CPSC to include 16 CFR part 1261, *Safety Standard for Clothing Storage Units*, in the laboratory's scope of accreditation listed on the CPSC website at: www.cpsc.gov/labsearch.

XV. Environmental Considerations

The Commission's regulations address whether CPSC is required to prepare an environmental assessment (EA) or an environmental impact statement (EIS). 16 CFR 1021.5.

Those regulations list CPSC actions that "normally have little or no potential for affecting the human environment," and therefore, fall within a "categorical exclusion" under the National Environmental Policy Act (42 U.S.C. 4231-4370h) and the regulations implementing it (40 CFR parts 1500-1508) and do not require an EA or EIS. 16 CFR 1021.5(c). Among those actions are rules that provide performance standards for products. *Id.* 1021.5(c)(1). Because this rule would create performance requirements for CSUs, the rule falls within the categorical exclusion, and thus, no EA or EIS is required.

XVI. Congressional Review Act

The Congressional Review Act (CRA; 5 U.S.C. 801-808) states that before a rule may take effect, the agency issuing the rule must submit the rule, and certain related information, to each House of Congress and the Comptroller General. 5 U.S.C. 801(a)(1). The CRA submission must indicate whether the rule is a "major rule." The CRA states that the Office of Information and Regulatory Affairs (OIRA) determines whether a rule qualifies as a "major rule." A "major rule" is one that OIRA finds has resulted in or is likely to result in:

- an annual effect on the economy of $100,000,000 or more;
- a major increase in costs or prices for consumers, individual industries, government agencies, or geographic regions; or
- significant adverse effects on competition, employment, investment, productivity, innovation, or the ability of U.S. enterprises to compete with foreign enterprises in domestic and export markets.

Id. 804(2).

Because CPSC estimates the annual effect of this rule to be $100 million or more, OIRA determined that this is a major rule. To comply with the CRA, CPSC will submit the required information to each House of Congress and the Comptroller General.

XVII. Preemption

Executive Order (EO) 12988, *Civil Justice Reform* (Feb. 5, 1996), directs agencies to specify the preemptive effect of a rule in the regulation. 61 Fed. Reg. 4729 (Feb. 7, 1996), section 3(b)(2)(A). In accordance with EO 12988, CPSC states the preemptive effect of the rule, as follows:

The Commission issues these regulations for CSUs under authority of the CPSA. Section 26 of the CPSA provides that "whenever a consumer product safety standard under this Act is in effect and applies to a risk of injury associated with a consumer product, no State or political subdivision of a State shall have any authority either to establish or to continue in effect any provision of a safety standard or regulation which prescribes any requirements as to the performance, composition, contents, design, finish, construction, packaging or labeling of such product which are designed to deal with the same risk of injury associated with such consumer product, unless such requirements are identical to the requirements of the Federal Standard." 15 U.S.C. 2075(a). The federal government, or a state or local government, may establish or continue in effect a non-identical requirement for its own use that is designed to protect against the same risk of injury as the CPSC standard if the federal, state, or local requirement provides a higher degree of protection than the CPSA requirement. *Id.* 2075(b). In addition, states or political subdivisions of a state may apply for an exemption from preemption regarding a consumer product safety standard, and the Commission may issue a rule granting the exemption if it finds that the state or local standard: (1) provides a significantly higher degree of protection from the risk of injury or illness than the CPSA standard, and (2) does not unduly burden interstate commerce. *Id.* 2075(c).

Thus, with the exception of the allowances in 15 U.S.C. 2075(b) and (c), the requirements in part 1261 preempt non-identical state or local requirements for CSUs designed

to protect against the same risk of injury and prescribing requirements regarding the performance, composition, contents, design, finish, construction, packaging or labeling of CSUs.

XVIII. Effective Date

The CPSA requires that consumer product safety rules issued under sections 7 and 9 must take effect at least 30 days after the date the rule is promulgated, but not later than 180 days after the date the rule is promulgated unless the Commission finds, for good cause shown, that an earlier or a later effective date is in the public interest and, in the case of a later effective date, publishes the reasons for that finding. 15 U.S.C. 2058(g)(1).

In addition, the CRA includes requirements regarding effective dates for "major rules." As discussed in section **XVI. Congressional Review Act**, this is a major rule. In general, unless Congress disapproves a rule, a major rule must take effect no earlier than 60 days after the rule is published in the *Federal Register* or Congress receives a report of the rule, whichever is later. 5 U.S.C. 801(a)(3). The NPR proposed that the rule would take effect 30 days after publication of the final rule in the *Federal Register*. Because OIRA has now determined that this is a major rule, it was necessary for the Commission to reassess the 30-day effective date proposed in the NPR.

Additionally, CPSC received numerous comments regarding the effective date from a variety of commenters (*e.g.*, industry associations, manufacturers, importers, retailers, and consumer advocacy groups). Most comments stated that the proposed 30-day effective date would be unrealistic given the time, costs, and logistics necessary to modify CSUs to comply with the standard, particularly since nearly all CSUs currently on the market do not meet the standard. Commenters explained that work necessary to comply with the rule would include: testing CSUs in their current state, modifying CSU designs as necessary and within reasonable cost ranges, working with suppliers, redesigning packaging, reworking logistics, changing manufacturing processes, communicating with and training stakeholders, and adjusting costing

including with retailers. Commenters also stated that significant supply chain issues affect a realistic effective date. Commenters asserted that under normal conditions, product lead time would be 4 to 6 weeks longer than 30 days, but with current supply chain issues, product lead time from ordering to manufacturing to delivery is between 9 and 12 months and orders sit in process for 6 months or more. Accordingly, they assert that orders placed before the final rule takes effect could not be met, as manufacturing would not occur for several months. Commenters noted that these issues could also increase consumer prices.

Commenters asserted that changes to a large number of CSU models impacted by the requirements of the rule, along with a heavy industry reliance on ocean freight shippers facing significant constraints due to shortages, contribute to cumulative lead times that range from 3 months to a year or more to bring new models to the U.S. market. The Small Business Administration's Office of Advocacy recommended a later effective date to address supply chain issues, and to ensure retailers have compliant stock by the effective date of the rule. Staff found these comments to be credible because of the specific examples provided by commenters and because these comments align with what staff had previously determined about the industry's supply chain, which impacts both domestic manufacturing and imports, as stated in the NPR briefing package.

Several commenters recommended that an effective date of 180 days may be sufficient to accommodate these considerations, and several stated that 360 days was more in line with the normal product development process and would still be short, since they asserted that this process typically takes several years.

Based on these comments, and staff's understanding of the market, a 30-day effective date has the potential to be very costly to producers and consumers and bring significant market disruption, while likely increasing benefits by only a very small amount as most of CSUs in use do not comply with the standard and will take years to cycle out of use. Therefore, based on

these comments and staff's analysis of the costs associated with the rule (Tab H), the rule (including the amendment to part 1112) will go into effect **[INSERT DATE 180 DAYS AFTER DATE OF PUBLICATION IN THE FEDERAL REGISTER]** and will apply to all CSUs that are subject to the rule that are manufactured[141] after that date.

XIX. Severability

This final rule includes multiple provisions that aim to address the risk associated with CSU tip overs, including multiple elements in the definition of a CSU, provisions regarding the scope of products covered by the rule, stability requirements, interlock requirements, warning label requirements, hang tag requirements, and anti-stockpiling requirements. Because the rule includes these multiple elements, it also includes a provision stating the Commission's intent that if provisions of the rule are stayed or determined to be invalid by a court, the remaining provisions in the rule should continue in effect. For example, if a court determines that the provisions regarding warning labels are invalid, the remaining requirements in the rule regarding stability and hang tags still serve the purpose of addressing the tip-over hazard, and it is the Commission's intent that these remain in effect.

XX. Findings

As explained, the CPSA requires the Commission to make certain findings when issuing a consumer product safety standard. 15 U.S.C. 2058(f)(1), (f)(3). These findings are stated in § 1261.8 of the rule and are based on information provided throughout this preamble and the staff's briefing packages for the proposed and final rules.

XXI. Conclusion

[141] The final rule states that the effective date applies to CSUs manufactured after the effective date, rather than CSUs manufactured or imported after the effective date, to align with the statutory language in section 9(g).

For the reasons stated in this preamble, the Commission concludes that CSUs that do not meet the requirements specified in this rule, and are not exempt from the rule, present an unreasonable risk of injury associated with CSU tip overs.

List of Subjects

16 CFR Part 1112

Administrative practice and procedure, Audit, Consumer protection, Reporting and recordkeeping requirements, Third-party conformity assessment body.

16 CFR Part 1261

Consumer protection, Imports, Incorporation by reference, Information, Labeling, Safety.

For the reasons discussed in the preamble, the Commission amends chapter II, subchapter B, title 16 of the Code of Federal Regulations as follows:

PART 1112—REQUIREMENTS PERTAINING TO THIRD PARTY CONFORMITY ASSESSMENT BODIES

1. The authority citation for part 1112 continues to read as follows:

Authority: Pub. L. 110-314, section 3, 122 Stat. 3016, 3017 (2008); 15 U.S.C. 2063.

2. Amend § 1112.15 by adding paragraph (b)(54) to read as follows:

§ 1112.15 When can a third party conformity assessment body apply for CPSC acceptance for a particular CPSC rule or test method?

* * * * *

(b) * * *

(54) 16 CFR part 1261, Safety Standard for Clothing Storage Units.

* * * * *

3. Add part 1261 to read as follows:

PART 1261—SAFETY STANDARD FOR CLOTHING STORAGE UNITS

Sec.

Authority: 15 U.S.C. 2051(b), 2056, 2058, 2063(c), 2076(e)

§ 1261.1 Scope, purpose, application, and exemptions.

(a) *Scope and purpose*. This part, a consumer product safety standard, prescribes the safety requirements, including labeling and hang tag requirements, for *clothing storage units*, as defined in § 1261.2(c). These requirements are intended to reduce or eliminate an unreasonable risk of death or injury to consumers from clothing storage unit tip overs.

(b) *Application*. Except as provided in paragraph (c) of this section, all *clothing storage units* that are manufactured after [EFFECTIVE DATE OF FINAL RULE], are subject to the requirements of this part 1261.

(c) *Exemptions.* The following products are exempt from this part:

(1) *Clothes lockers*, as defined in § 1261.2(b), and

(2) *Portable storage closets*, as defined in § 1261.2(t).

§ 1261.2 Definitions.

In addition to the definitions given in section 3 of the Consumer Product Safety Act (15 U.S.C. 2052), the following definitions apply for purposes of this part:

(a) *Closed storage* means storage space inside a *drawer* and/or behind an opaque *door*. For this part, both sliding and hinged doors are considered in the definition of *closed storage*.

(b) *Clothes locker* means a predominantly metal furniture item, without exterior drawers and with one or more doors, that either locks or accommodates an external lock.

(c) *Clothing storage unit* means a consumer product that is a *freestanding* furniture item, with *drawer(s)* and/or *door(s)*, that may be reasonably expected to be used for storing clothing, that is designed to be configured to greater than or equal to 27 inches in height, has a mass greater than or equal to 57 pounds with all *extendable elements* filled with at least 8.5 pounds/cubic foot times their *functional volume* (cubic feet), has a total *functional volume* of the *closed storage* greater than 1.3 cubic feet, and has a *total functional volume* of the *closed storage* greater than the sum of the total *functional volume* of the *open storage* and the total volume of the *open space*. Common names for clothing storage units include, but are not limited to: chests, bureaus, dressers, armoires, wardrobes, chests of drawers, drawer chests, chifforobes, and door chests. Whether a product is a clothing storage unit depends on whether it meets this definition. Some products that, depending on their design, may not meet the criteria in this definition and, therefore, may not be considered clothing storage units are: shelving units, office furniture, dining room furniture, laundry hampers, built-in closets, and single-compartment closed rigid boxes (storage chests).

(d) *Door* means a hinged furniture component that can be opened or closed, typically outward or downward, to form a barrier; or a sliding furniture component that can be opened or closed by sliding across the face or case of the furniture item. This does not include vertically opening hinged lids.

(e) *Door extension from fulcrum distance* means the horizontal distance measured from the farthest point of a hinged door that opens outward or downward, while the door is in the least stable configuration (typically 90 degrees), to the *fulcrum*, while the *clothing storage unit* is on a *hard, level, and flat test surface*. *See* figure 1 to this paragraph (e). Sliding doors that remain within the *clothing storage unit* case are not considered to have a door extension.

Figure 1 to paragraph (e)—(Top View) The *door extension from fulcrum distance,* illustrated by the letter Y.

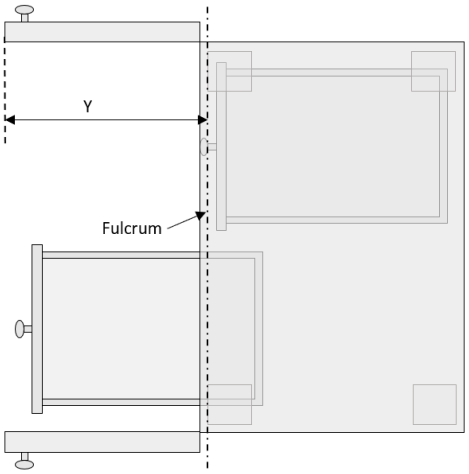

(f) *Drawer* means a furniture component intended to contain or store items that slides horizontally in and out of the furniture case and may be attached to the case by some means, such as glides. Only components that are retained in the case when extended up to 2/3 the shortest internal length, when empty, are included in this definition.

(g) *Extendable element* means a *drawer* or *pull-out shelf*.

(h) *Extendable element extension from fulcrum distance* means the horizontal distance measured from the centerline of the front face of the *drawer* or the outermost surface of the *pull-out shelf* to the *fulcrum*, when the *extendable element* is at the *maximum extension* and the *clothing storage unit* is on a *hard, level, and flat test surface*. For a curved or angled surface this measurement is taken where the distance is at its greatest. *See* figure 2 to this paragraph (h).

Figure 2 to paragraph (h)—The *extendable element extension from fulcrum distance*, illustrated by the letter X.

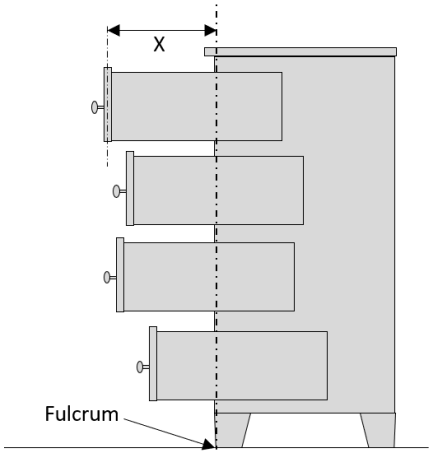

(i) *Freestanding* means that the unit remains upright, without needing attachment to the wall or other upright rigid structure, when it is fully assembled and empty, with all *extendable elements* and *doors* closed. Built-in units are not considered freestanding.

(j) *Fulcrum* means the point or line at the base of the *clothing storage unit clothing storage unit* about which the *clothing storage unit* pivots when a *tip-over force* is applied (typically the front feet). The *fulcrum* position is determined while the *clothing storage unit* is on a *hard, level, and flat test surface* with all *doors* and *extendable elements* closed.

(k) *Functional volume* of an *extendable element* means the interior bottom surface area multiplied by the effective *extendable element* height, which is distance from the bottom surface of the *extendable element* to the top of the *extendable element* compartment minus 1/8 inches (*see* figure 3 to this paragraph (k)). *Functional volume* behind a *door* means the interior bottom surface area behind the *door*, when the *door* is closed, multiplied by the height of the storage compartment (*see* figure 4 to this paragraph (k)). *Functional volume* of *open storage* means the interior bottom surface area multiplied by the effective *open storage* height, which is distance

from the bottom surface of the *open storage* to the top of the *open storage* compartment minus 1/8 inches.

Figure 3 to paragraph (k)—*Functional volume* of *extendable element*.

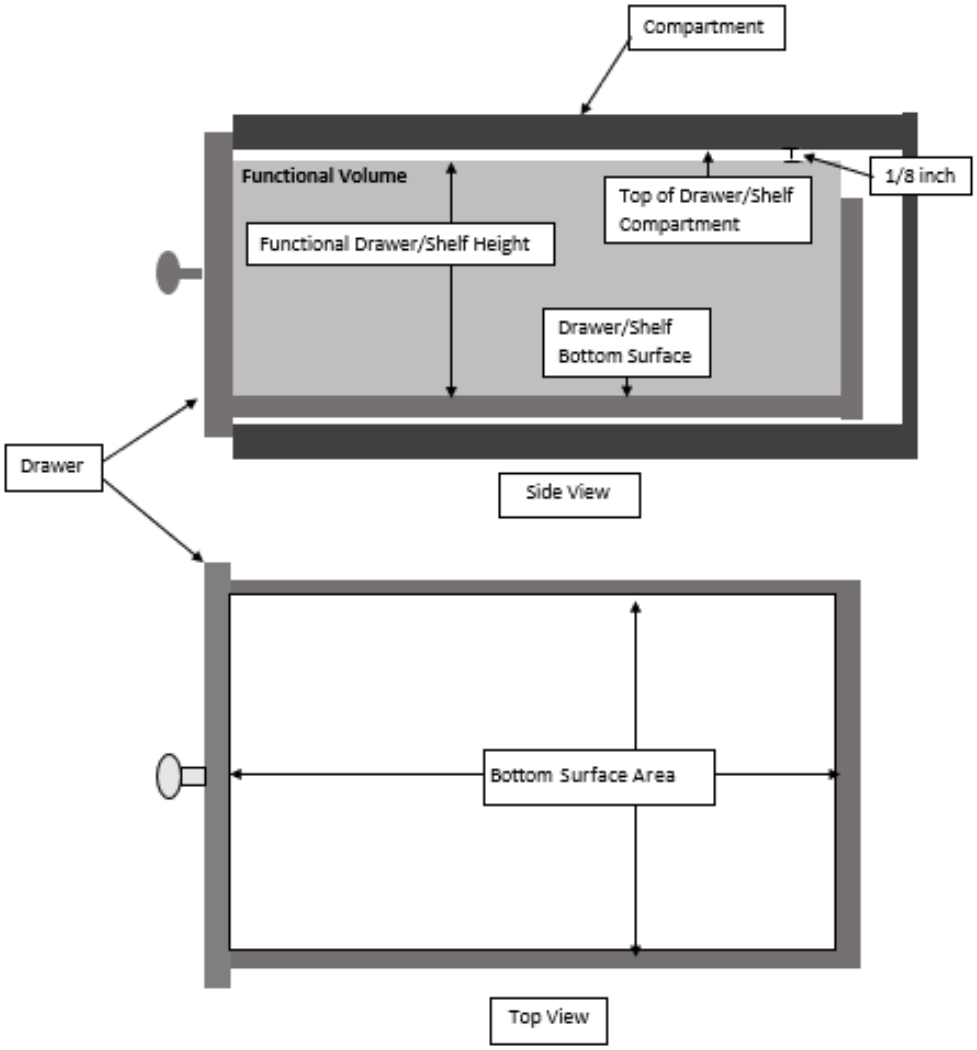

Figure 4 to paragraph (k)—*Functional volume* behind a *door*.

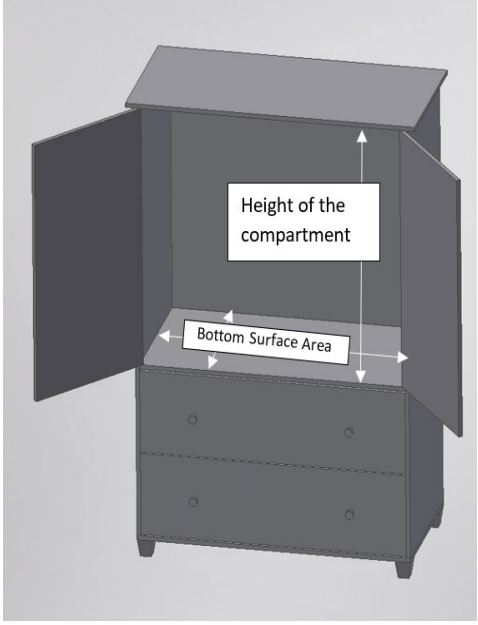

(l) *Hard, level, and flat test surface* means a test surface that is

(1) Sufficiently hard to not bend or break under the weight of a *clothing storage unit* and any loads associated with testing the unit;

(2) Level with no more than 0.5 degrees of variation; and

(3) Smooth and even.

(m) *Interlock* means a device(s) that restricts simultaneous opening of *extendable elements* or *doors*.

(n) *Levelling device* means an adjustable device intended to adjust the level of the *clothing storage unit*.

(o) *Maximum extension* means a condition when an *extendable element* is open to the furthest manufacturer recommended use position, as indicated by way of a stop. In the case of slides with multiple intermediate stops, this is the stop that allows the *extendable element* to extend the furthest. In the case of slides with a multipart stop, such as a stop that extends the *extendable element* to the furthest manufacturer recommended use position with an additional

stop that retains the *extendable element* in the case, this is the stop that extends the *extendable element* to the manufacturer recommended use position. If the manufacturer does not provide a recommended use position by way of a stop, this is 2/3 the shortest internal length of the *drawer* measured from the inside face of the drawer front to the inside face of the drawer back or 2/3 the shortest internal length of the *pull-out shelf*. *See* figure 5 to this paragraph (o).

Figure 5 to paragraph (o)—Example of *maximum extension* on *extendable elements* with stops and without stops.

With Stops

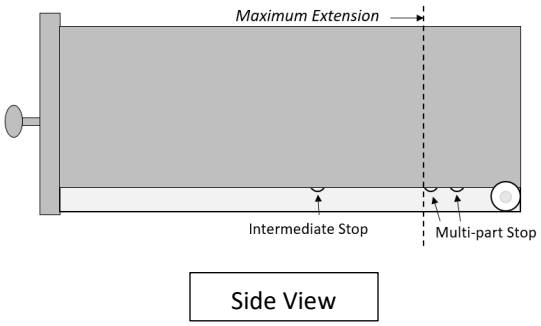

Without Stops

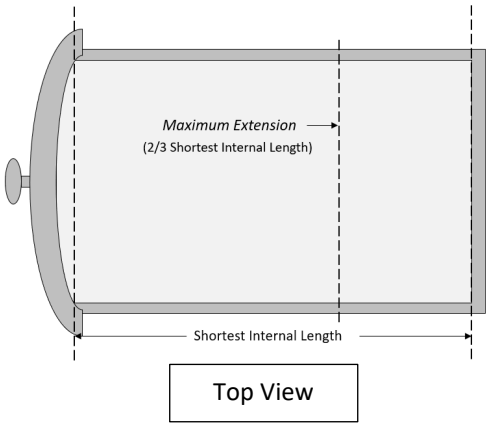

(p) *Maximum handhold height* means the highest position at which a child may grab hold of the *clothing storage unit*, measured while the *clothing storage unit* is on a *hard, level, and flat surface*. For units shorter than 4.12 feet, this is the top of the *clothing storage unit*. For units 4.12 feet or taller, this is 4.12 feet. *See* figure 6 to this paragraph (p).

Figure 6 to paragraph (p)—The *maximum handhold height*, illustrated by the letter Z for a unit shorter than 4.12 feet (left) and for a unit 4.12 feet or taller (right).

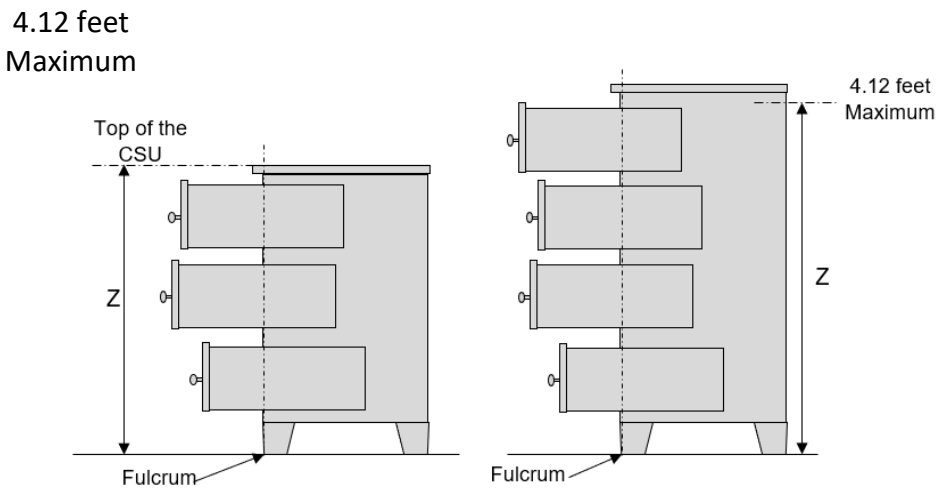

(q) *Moment* means a moment of a force, which is a measure of the tendency to cause a body to rotate about a specific point or axis. It is measured in pound-feet, representing a force multiplied by a lever arm, or distance from the force to the point of rotation.

(r) *Open space* means space within the frame of the furniture, but without a bottom surface. For example, open space between legs, such as with a console table, or between separated storage components, such as with a vanity or a desk, are considered *open space*. This definition does not include space inside the furniture case (*e.g.*, space between a drawer and the case) or any other space that is not visible to a consumer standing in front of the unit (*e.g.*, space behind a base panel).

(s) *Open storage* means space within the frame of the furniture that is open (*i.e.*, is not in a *drawer* or behind an opaque *door*) and that reasonably can be used for storage (*e.g.*, has a flat bottom surface). For example, open shelf space that is not behind a *door*, display space behind a non-opaque *door*, and framed open clothing hanging space are considered *open storage*.

(t) *Portable storage closet* means a freestanding furniture item with an open frame that encloses hanging clothing storage space and/or shelves. This item may have a cloth case with curtain(s), flap(s), or door(s) that obscure the contents from view.

(u) *Pull-out shelf* means a furniture component with a horizontal flat surface that slides horizontally in and out of the furniture case and may be attached to the case by some means, such as glides.

(v) *Test block* means a block constructed of a rigid material, such as steel or aluminum, with the following dimensions: at least 0.43 inch thick, at least 1 inch deep, at least 1 inch wide. *See* figure 7 to this paragraph (v).

Figure 7 to paragraph (v)—Test block.

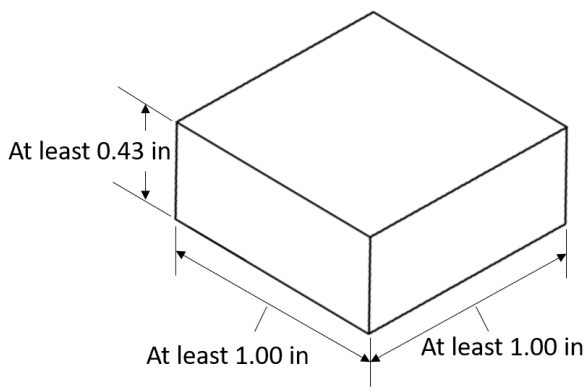

(w) *Tip over* means an event at which a *clothing storage unit* pivots forward to the point at which the *clothing storage unit* will continue to fall and/or be supported by a non-support element.

(x) *Tip-over force* means the force required to cause *tip over* of the *clothing storage unit*.

(y) *Tip-over moment* means the minimum *moment* in pound-feet about the *fulcrum* that causes *tip over*.

§ 1261.3 Requirements for interlocks.

(a) *General*. For all *clothing storage units* with *interlocks*, including consumer-assembled units, the *interlock* components must be pre-installed, and automatically engage when the consumer installs the *interlocked extendable element(s)* or *door(s)* in the unit. All *interlocks* must engage automatically as part of normal use.

(b) *Interlock pull test*. (1) If the unit is not fully assembled, assemble the unit according to the manufacturer's instructions.

(2) Place the unit on a *hard, level, and flat test surface*.

(3) If the unit has one or more *levelling devices*, adjust the *levelling device(s)* to the lowest level; then adjust the *levelling device(s)* in accordance with the manufacturer's instructions.

(4) Secure the unit, without interfering with the interlock function, to prevent sliding or *tip over*.

(5) Open any non-interlocked *doors* that are in front of the *interlocked extendable elements*.

(6) Engage the *interlock* by opening to the maximum extension the number of *extendable elements* or *doors* necessary to engage the *interlock*.

(7) Gradually apply over a period of at least 5 seconds a 30-pound horizontal pull force on each interlocked *extendable element* or *door* at the center of the pull area(s), one element at a time, and hold the force for at least 10 seconds.

(8) Repeat this test until all possible combinations of *extendable elements* and *doors* have been tested.

(c) *Performance requirement.* The *interlock* will be disabled or bypassed for the stability testing in § 1261.4(c) if, as a result of the testing specified in paragraph (b) of this section:

(1) any interlocked *extendable element* or *door* extends during the test without retracting the originally open *extendable element* or *door*; or

(2) any *interlock* or interlocked *extendable element* or *door* is damaged or does not function as intended after the test.

§ 1261.4 Requirements for stability.

(a) *General. Clothing storage units* shall be configured as described in paragraph (b) of this section, and tested in accordance with the procedure in paragraph (c) of this section. *Clothing storage units* shall meet the requirement for tip-over stability based on the *tip-over moment* as specified in paragraph (d) of this section.

(b) *Test configuration*. The *clothing storage unit* used for tip-over testing shall be configured in the following manner:

(1) If the unit is not fully assembled, assemble the unit according to the manufacturer's instructions. Units shall not be attached to the wall or any upright structure for testing.

(2) Place the unit on a *hard, level, and flat test surface* in the orientation most likely to cause *tip over*. If necessary, secure the unit from sliding without preventing *tip over*.

(3) If the *clothing storage unit* has one or more *levelling devices*, adjust the *levelling device(s)* to the lowest level; then adjust the *levelling device(s)* in accordance with the manufacturer's instructions.

(4) Record the *maximum handhold height*, the longest *extendable element extension from fulcrum distance*, and the longest *door extension from fulcrum distance*, as applicable. These measurements are used in § 1261.4(d).

(5) Tilt the *clothing storage unit* forward by placing the *test block(s)* under the unit's most rear floor support(s) such that either the entire floor support contact area is over the *test block(s)* or the back edge of the *test block(s)* is aligned with the back edge of the rear floor supports.

(6) Disable or bypass any *interlock(s)* in accordance with § 1261.3(c).

(7) Open all hinged *doors* that open outward or downward that are not locked by an *interlock* to the least stable configuration (typically 90 degrees).

(8) Open all *extendable elements* that are not locked by an *interlock* to the *maximum extension*, in the configuration most likely to cause *tip over* (typically the configuration with the largest *drawers* in the highest position open). Then place fill weights according to the following criteria:

(i) If 50 percent or more of the *extendable elements* by *functional volume* are open, place a fill weight in the center of the bottom surface of each *extendable element*, including those that remain closed, that consists of a uniformly distributed mass in pounds. The fill weight in open *extendable elements* must be at least 8.5 pounds/cubic foot times the *functional volume* (cubic feet). The fill weight in closed *extendable elements* must be no more than 8.5 pounds/cubic foot times the *functional volume* (cubic feet). If necessary, secure the fill weights to prevent sliding. *See* figure 1 to this paragraph (i).

Figure 1 to paragraph (i)—Fill weights in all drawers if 50 percent or more of the *extendable elements* by *functional volume* are open.

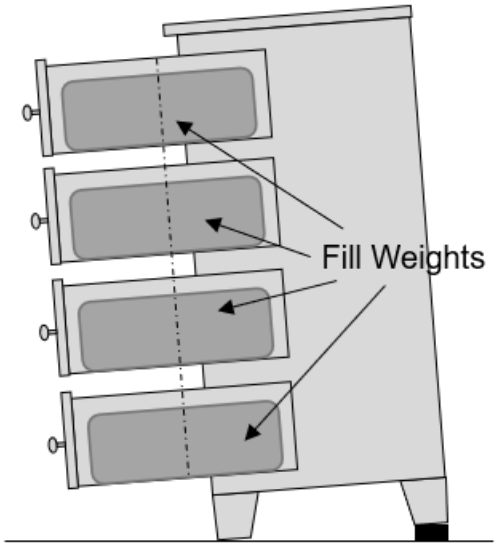

(ii) If less than 50 percent of the *extendable elements* by *functional volume* are open, do not place a fill weight in or on any *extendable element(s)*. *See* figure 2 to this paragraph (ii).

Figure 2 to paragraph (i)—No fill weights if less than 50 percent of the *extendable elements* by *functional volume* are open.

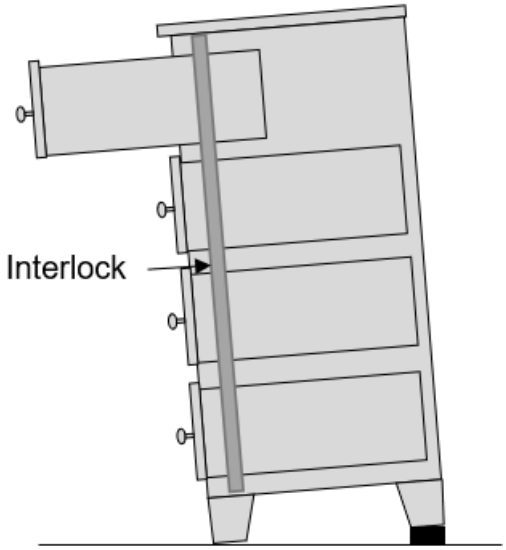

(c) *Test procedure to determine tip-over moment of the unit*. Perform one of the following two tip-over tests (Test Method 1 or Test Method 2), whichever is the most appropriate for the unit:

(1) Test Method 1 shall be used for units with *extendable elements* that extend at least 6 inches from the *fulcrum*. Record the horizontal distance from where the center of force will be applied (the center of gravity of the weights to be applied) to the *fulcrum*. Gradually apply over a period of at least 5 seconds weights to the face of an extended *extendable element* of the unit to cause the unit to *tip over*. The weights are to be placed on a single *drawer* face or distributed evenly across multiple *drawer* faces or as adjacent as possible to the *pull-out shelf* face. The weights shall not interfere with other extended *extendable elements*. Record the *tip-over force*. Calculate the *tip-over moment* of the unit by multiplying the *tip-over force* (pounds) by the

horizontal distance from the center of the force application to the *fulcrum* (feet). *See* figure 3 to this paragraph (c)(1).

Figure 3 to paragraph (c)(1)—Illustration of force application methods for Test Method 1 with vertical load Lv (*test block* not to scale).

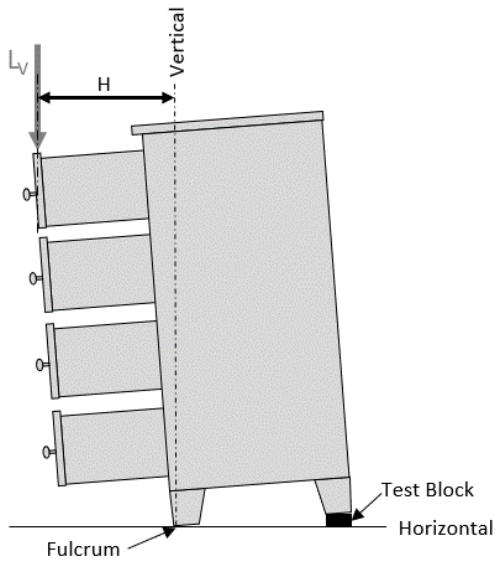

(2) Test Method 2 shall be used for any unit for which Test Method 1 does not apply. Record the vertical distance from where the center of force will be applied to the *fulcrum.* Gradually apply over a period of at least 5 seconds a horizontal force to the unit orthogonal to the *fulcrum* to cause the unit to *tip over*. Record the *tip-over force*. Calculate the *tip-over moment* of the unit by multiplying the *tip-over force* (pounds) by the vertical distance from the center of force application to the *fulcrum* (feet). *See* figure 4 to this paragraph (c)(2).

Figure 4 to paragraph (c)(2)—Illustration of force application methods for Test Method 2 with horizontal load L_H (*test block* not to scale).

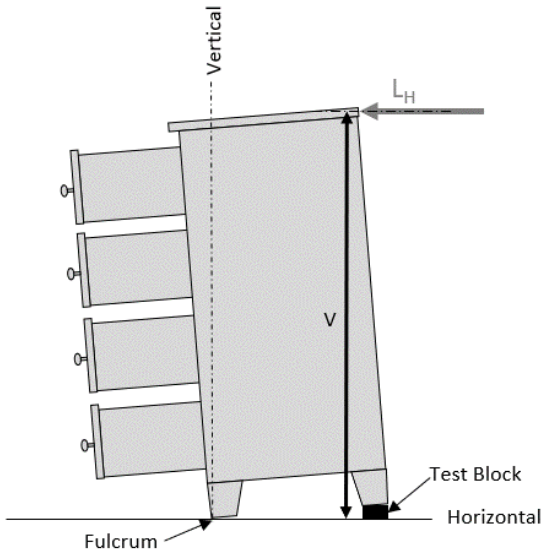

(3) If a failed component prohibits completion of the test, then to continue testing, the failed component(s) must be repaired or replaced to the original specifications, or the component(s) must be replaced and the test repeated with the failed component(s) secured to prevent the component(s) from failing, as long as the modifications do not increase the *tip-over moment*.

(d) *Performance requirement*. The *tip-over moment* of the *clothing storage unit* must be greater than the threshold moment, which is the greatest of all of the applicable moments in paragraphs (d)(1) through (3) of this section:

(1) For units with an *extendable element(s)*: 55.3 pounds times the *extendable element extension from fulcrum distance* in feet + 26.6 pound-feet;

(2) For units with a *door(s)*: 51.2 pounds times the *door extension from fulcrum distance* in feet – 12.8 pound-feet; and

(3) For all units: 17.2 pounds times *maximum handhold height* in feet.

§ 1261.5 Requirements for marking and labeling.

(a) *Warning label requirements*. The *clothing storage unit* shall have a warning label, as defined below.

(1) *Size.* The warning label shall be at least 2 inches wide by 2 inches tall.

(2) *Content.* (i) The warning label shall contain the following text, with the text following brackets to be included only for the units specified in the brackets:

Children have died from furniture tip over. To reduce the risk of tip over:

- ALWAYS secure this furniture to the wall using an anti-tip device.
- NEVER allow children to stand, climb, or hang on drawers, doors or shelves.
- [for units with interlocks only] Do not defeat or remove the drawer interlock system.
- Place heaviest items in the lowest drawers.
- [for units that are not designed to hold a television only] NEVER put a TV on this furniture.

(ii) The warning label shall contain the three-panel child climbing symbol displayed in figure 1 to this paragraph (a)(2)(ii), with the prohibition symbol in red and the check mark in green. The third panel (*i.e.*, depicting attachment to the wall) may be modified to show a specific anti-tip device included with the *clothing storage unit*.

Figure 1 to paragraph (a)(2)(ii)—Three-panel child climbing symbol.

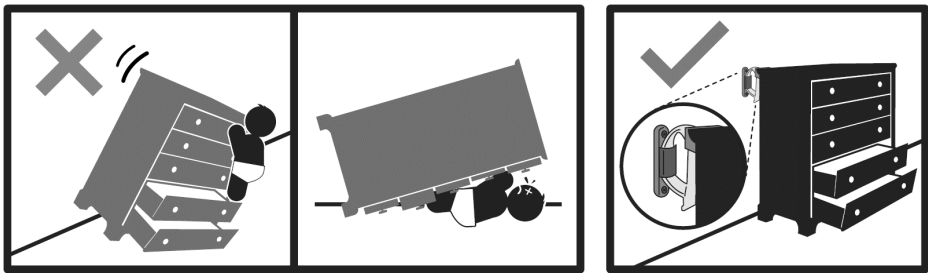

(iii) For units that are not designed to hold a television, the warning label also shall contain the no television symbol displayed in figure 2 to this paragraph (a)(2)(iii), with the prohibition symbol in red.

Figure 2 to paragraph (a)(2)(iii)—No television symbol.

(iv) The content of the warning label required in this paragraph (a)(2) shall not be modified or amended except as specifically indicated.

(3) *Format*. The warning label shall use the signal word panel content and format specified in Section 8.2.2 of ASTM F2057-19, *Standard Safety Specification for Clothing Storage Units*, and the font, font size, and color specified in Section 8.2.3 of ASTM F2057-19 (incorporated by reference, see paragraph (c) of this section). Each safety symbol shall measure at least 1 inch by 1 inch *See* figure 3 to this paragraph (a)(3).

Figure 3 to paragraph (a)(3)—Example warning label for a clothing storage unit with an interlock system that is not designed to hold a television (top) and for a clothing storage unit without an interlock system that is designed to hold a television (bottom). Note that this example does not illustrate the required colors.

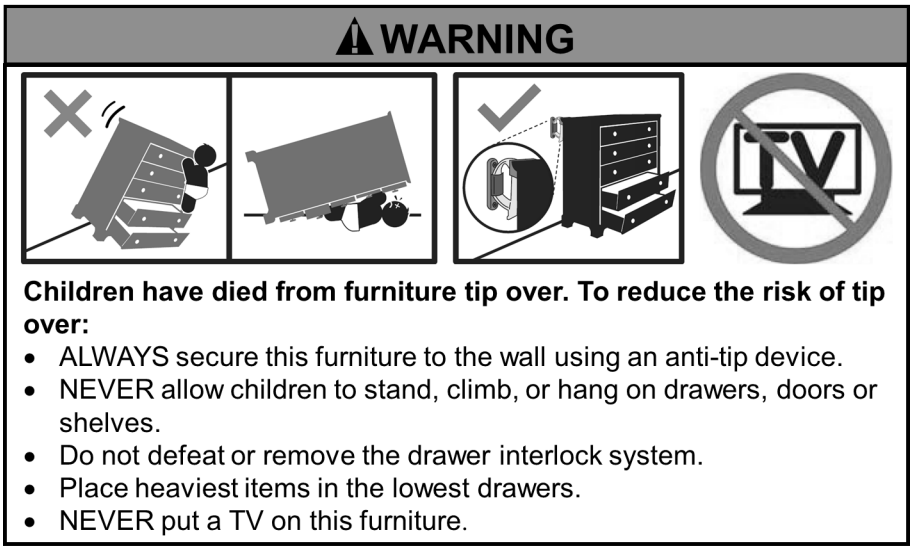

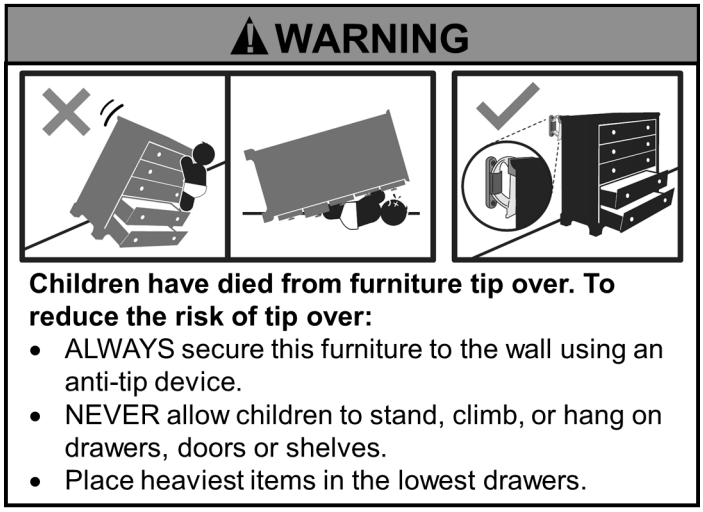

(4) *Location*. (i) For units with one or more *drawer(s)*:

(A) The warning label shall be located on the interior side panel of a *drawer* in the upper most *drawer* row or, if the top of the *drawer(s)* in the upper most *drawer* row is more than 56 inches from the floor, on the interior side panel of a *drawer* in the upper most *drawer* row below 56 inches from the floor, as measured from the top of the *drawer*.

(B) The top left corner of the warning label shall be positioned within 1 inch of the top of the *drawer* side panel and within the front 1/3 of the drawer, based on the shortest internal length.

(ii) For units with only *doors*: The warning label shall be located on an interior side or back panel of the cabinet behind the *door(s)*, or on the interior *door* panel. The warning label shall not be obscured by a shelf or other interior element.

(iii) For consumer-assembled units: The warning label shall be pre-attached to the panel, and the assembly instructions shall direct the consumer to place the panel with the warning label according to the placement requirements above.

(5) *Permanency*. The warning label shall be legible and attached after it is tested using the methods specified in Section 7.3 of ASTM F2057-19, *Standard Safety Specification for Clothing Storage Units* (incorporated by reference, see paragraph (c) of this section).

(b) *Identification marking or labeling requirements*. The *clothing storage unit* shall have an identification mark or label, as defined in this paragraph (b).

(1) *Size.* The identification mark or label shall be at least 2 inches wide by 1 inch tall.

(2) *Content.* The identification mark or label shall contain the following:

(i) Name and address (city, state, and zip code) of the manufacturer, distributor, or retailer; the model number; and the month and year of manufacture.

(ii) The statement "Complies with U.S. CPSC Safety Standard for Clothing Storage Units," as appropriate; this label may spell out "U.S. Consumer Product Safety Commission" instead of "U.S. CPSC."

(3) *Format*. The identification mark or label text shall not be less than 0.1 in. (2.5 mm) capital letter height. The text and background shall be contrasting colors (*e.g.*, black text on a white background).

(4) *Location*. The identification mark or label shall be visible from the back of the unit when the unit is fully assembled.

(5) *Permanency*. The identification mark or label shall be legible and attached after it is tested using the methods specified in Section 7.3 of ASTM F2057-19, *Standard Safety Specification for Clothing Storage Units* (incorporated by reference, see paragraph (c) of this section).

(c) *Incorporation by reference.* Certain portions, identified in this section, of ASTM F2057-19, *Standard Safety Specification for Clothing Storage Units*, approved on August 1, 2019, are incorporated by reference into this part with the approval of the Director of the Federal Register in accordance with 5 U.S.C. 552(a) and 1 CFR part 51. You may obtain a copy from ASTM International, 100 Barr Harbor Drive, PO Box C700, West Conshohocken, PA 19428-2959; phone: (610) 832-9585; www.astm.org. A read-only copy of the standard is available for viewing on the ASTM website at https://www.astm.org/READINGLIBRARY/. You may inspect

a copy at the Office of the Secretary, U.S. Consumer Product Safety Commission, 4330 East West Highway, Bethesda, MD 20814, telephone (301) 504-7479, email: cpsc-os@cpsc.gov, or at the National Archives and Records Administration (NARA). For information on the availability of this material at NARA, email fr.inspection@nara.gov, or go to: www.archives.gov/federal-register/cfr/ibr-locations.html.

§ 1261.6 Requirements to provide performance and technical data by labeling.

Manufacturers of *clothing storage units* shall give notification of performance and technical data related to performance and safety to prospective purchasers of such products at the time of original purchase and to the first purchaser of such product for purposes other than resale, in the manner set forth in this section:

(a) *Consumer information requirements for physical points of sale, packaging, and on-product*. The manufacturer shall provide a hang tag with every *clothing storage unit* that provides the ratio of *tip-over moment* as tested to the minimally allowed *tip-over moment* of that model *clothing storage unit*. The label must conform in content, form, and sequence to the hang tag shown in figure 1 to this paragraph (a).

(1) *Size.* Every hang tag shall be at least 5 inches wide by 7 inches tall.

(2) *Side 1 Content.* The front of every hang tag shall contain the following:

(i) The title – "TIP OVER GUIDE."

(ii) The icon:

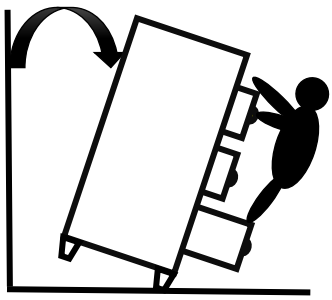

(iii) The statement – "Stability Rating."

(iv) The manufacturer's name and model number of the unit.

(v) Ratio of *tip-over moment*, as tested per § 1261.4(c), to the threshold moment, as determined per § 1261.4(d), of that model *clothing storage unit*, displayed on a progressive scale. This value shall be the stability rating, rounded to one decimal place (*e.g.*, X.Y).

(vi) The scale shall start at 1 and end at 2.

(vii) "MIN" and "OR MORE" on the left and right sides of the scale, respectively.

(viii) A solid horizontal line from 1 to the calculated rating.

(ix) The statement – "This unit is [enter rating value] times more stable than the minimum required," with the stability rating to be inserted for bracketed text.

(x) The statement – "Compare with other units before you buy."

(xi) The statement – "This is a guide to compare units' resistance to tipping over."

(xii) The statement – "Higher numbers represent more stable units."

(xiii) The statement – "No unit is completely safe from tip over."

(xiv) The statement – "Always secure the unit to the wall."

(xv) The statement – "Tell children not to climb furniture."

(xvi) The statement – "See back side of this tag for more information."

(xvii) The statement – "THIS TAG NOT TO BE REMOVED EXCEPT BY THE CONSUMER."

(3) *Side 2 Content.* The reverse of every hang tag shall contain the following:

(i) The statement – "Stability Rating Explanation."

(ii) The icon in paragraph (a)(2)(ii) of this section.

(iii) The stability rating determined in paragraph (a)(2)(v) of this section.

(iv) The statement – "Test data on this unit indicated it withstood [insert rating determined in paragraph (a)(2)(v) of this section] times the minimally acceptable moment, per

tests required by the U.S. Consumer Product Safety Commission (see below)," with the stability rating to be inserted for bracketed text.

(v) The statement – "Deaths and serious crushing injuries have occurred from furniture tipping over onto people."

(vi) The statement – "To reduce tip-over incidents, the U.S. Consumer Product Safety Commission (CPSC) requires that clothing storage units, such as dressers, chests, bureaus, and armoires, resist certain tip-over forces. The test that CPSC requires measures the stability of a clothing storage unit and its resistance to rotational forces, also known as moments. This test is based on threshold rotational forces of a 3-year-old child climbing up, hanging on, or pulling on drawers and/or doors of this unit. These actions create rotational forces (moments) that can cause the unit to tip forward and fall over. The stability rating on this tag is the ratio of this unit's tip-over moment (using CPSC's test) and the threshold tip-over moment. More information on the test method can be found in 16 CFR part 1261."

(4) *Format.* The hang tag shall be formatted as shown in figure 1 to paragraph (a). The background of the front of the tag shall be printed in full bleed process yellow or equivalent; the background of the back of the tag shall be white. All type and graphics shall be printed in process black.

(5) *Attachment.* Every hang tag shall be attached to the *clothing storage unit* and be clearly visible to a person standing in front of the unit. The hang tag shall be attached to the *clothing storage unit* and lost or damaged hang tags must be replaced such that they are attached and provided, as required by this section, at the time of original purchase to prospective purchasers and to the first purchaser other than resale. The hang tags may be removed only by the first purchaser.

(6) *Placement*. The hang tag shall appear on the product and the immediate container of the product in which the product is normally offered for sale at retail. Ready-to-assemble

furniture shall display the hang tag on the main panel of consumer-level packaging. The hang tag shall remain on the product/container/packaging until the time of original purchase. Any units shipped directly to consumers shall contain the hang tag on the immediate container of the product.

Figure 1 to paragraph (a)—Hang tag for a unit with a tip rating of 1.5.

SIDE 1

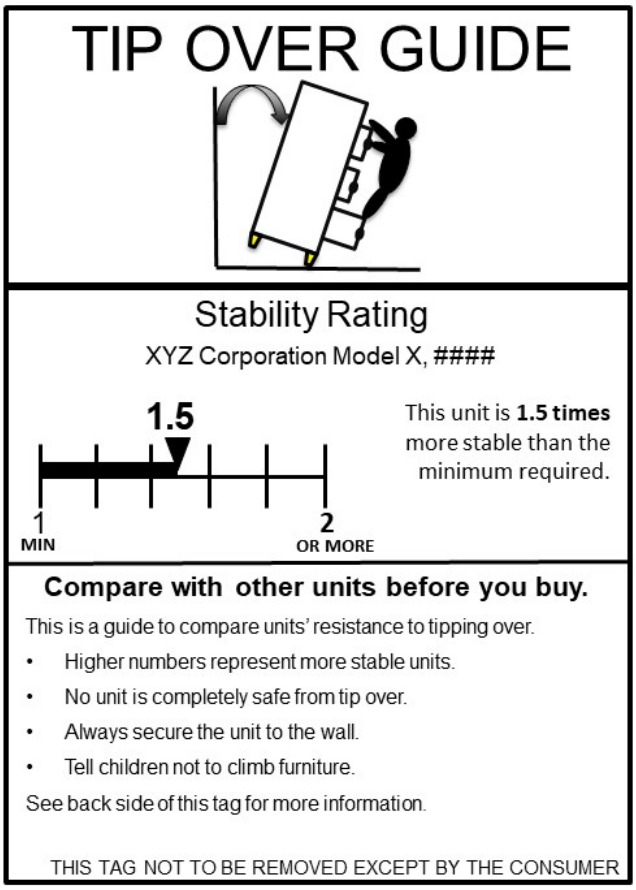

SIDE 2

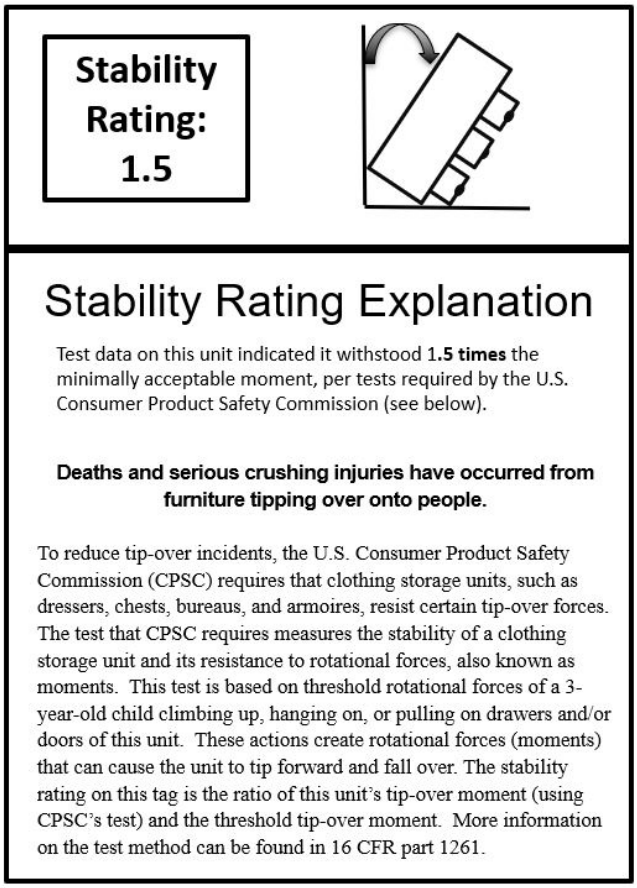

(b) *Consumer information requirements for online points of sale*. Any manufacturer or importer of a *clothing storage unit* with an online sales interface (*e.g.*, website or app) from which the *clothing storage unit* may be purchased shall provide on the online sales interface that offers the *clothing storage unit* for purchase:

(i) All of the content required by paragraphs (a)(2) and (a)(3) of this section, in the form and sequence shown in figure 1 to paragraph (a) of this section, except that it need not contain the statements in paragraphs (a)(2)(xvi) and (a)(2)(xvii) of this section.

(ii) The stability rating must be displayed in a font size equivalent to that of the price, in proximity to the price of the product, and a link to the virtual hang tag of the product must be provided through one user action (*e.g.*, mouse click, mouse roll-over, or tactile screen expansion) on the stability rating value or image.

§ 1261.7 Prohibited stockpiling.

(a) *Prohibited acts.* Manufacturers and importers of clothing storage units shall not manufacture or import clothing storage units that do not comply with the requirements of this part in any 1-month period between [**DATE OF PUBLICTION OF FINAL RULE**] and [**EFFECTIVE DATE OF FINAL RULE**] at a rate that is greater than 105 percent of the rate at which they manufactured or imported clothing storage units during the *base period* for the manufacturer.

(b) *Base period.* The base period for clothing storage units is the calendar month with the median manufacturing or import volume within the last 13 months immediately preceding the month of promulgation of the final rule.

§ 1261.8 Findings.

(a) *General*. Section 9(f) of the Consumer Product Safety Act (15 U.S.C. 2058(f)) requires the Commission to make findings concerning the following topics and to include the findings in the rule. Because the findings are required to be published in the rule, they reflect the information that was available to the Consumer Product Safety Commission (Commission, CPSC) when the standard was issued on [**DATE OF PUBLICATION OF FINAL RULE**].

(b) *Degree and nature of the risk of injury.* The standard is designed to reduce the risk of death and injury from clothing storage units tipping over onto children. The Commission has identified 199 clothing storage unit tip-over fatalities to children that were reported to have occurred between January 1, 2000 and April 30, 2022. There were an estimated 60,100 injuries, an annual average of 3,800 estimated injuries, to children related to clothing storage unit tip overs that were treated in U.S. hospital emergency departments from January 1, 2006 to December 31, 2021. Injuries and fatalities to children resulting from clothing storage units tipping over include soft tissue injuries, skeletal injuries and bone fractures, and fatalities resulting from skull fractures, closed-head injuries, compressional and mechanical asphyxia, and internal organ crushing leading to hemorrhage.

(c) *Number of consumer products subject to the rule.* In 2021, there were approximately 20.64 million clothing storage units sold.

(d) *The need of the public for clothing storage units and the effects of the rule on their cost, availability, and utility.* (1) Consumers commonly use clothing storage units to store clothing in their homes. The rule requires clothing storage units to meet a minimum stability threshold. As such, clothing storage units that meet the requirements of the rule would continue to serve the purpose of storing clothing in consumers' homes. There may be a negative effect on the utility of clothing storage units if products that comply with the standard are less convenient to use. Another potential effect on utility could occur if, in order to comply with the rule, manufacturers modify clothing storage units to eliminate certain desired characteristics or styles, or discontinue models. However, this loss of utility would be mitigated to the extent that other clothing storage units with similar characteristics and features comply with the rule.

(2) Retail prices of clothing storage units vary widely. The least expensive units retail for less than $100, while some more expensive units retail for several thousand dollars. CPSC estimates that the cost, per unit, to modify a clothing storage unit to comply with the rule is between $10.21 and $17.64, which includes the cost to redesign, modify (labor and materials), and test. Clothing storage unit prices may increase to reflect the added cost of modifying or redesigning products to comply with the standard, or to account for increased distribution costs. In addition, consumers may incur a cost in the form of additional time to assemble clothing storage units if additional safety features are included.

(3) If the costs associated with redesigning or modifying a clothing storage unit model to comply with the rule results in the manufacturer discontinuing that model and not replacing it with a model that complies with the rule, there would be some loss in availability of clothing storage units.

(e) *Other means to achieve the objective of the rule while minimizing adverse effects on competition, manufacturing, and commercial practices.* (1) The Commission considered alternatives to achieving the objective of reducing unreasonable risks of injury and death associated with clothing storage unit tip overs. For example, the Commission considered relying on voluntary recalls, anti-tip devices, compliance with the voluntary standard, and education campaigns, rather than issuing a standard. This alternative would have lower costs; however, it is unlikely to further reduce the risk of injury from clothing storage unit tip overs because the Commission has relied on these efforts to date.

(2) The Commission also considered issuing a rule that requires only performance and technical data, with no performance requirements for stability. This would impose lower costs on manufacturers, but is unlikely to adequately reduce the risk of injury from clothing storage unit tip overs because it relies on manufacturers choosing to offer more stable units; consumer assessment of their need for more stable units (which CPSC's research indicates consumers underestimate); and does not account for units outside a child's home or purchased before a child was born.

(3) The Commission also considered mandating a standard like the voluntary standard, but replacing the 50-pound test weight with a 60-pound test weight. This alternative would be less costly than the rule because many clothing storage units already meet such a requirement, and it would likely cost less to modify noncompliant units to meet this less stringent standard. However, this alternative is unlikely to adequately reduce the risk of clothing storage unit tip overs because it does not account for factors that are present in tip-over incidents that contribute to clothing storage unit instability, including multiple open and filled drawers, carpeting, and forces generated by a child interacting with the unit.

(4) Another alternative the Commission considered was setting a later effective date. This may reduce the costs of the rule by spreading them over a longer period, but it would also delay the benefits of the rule, in the form of reduced deaths and injuries.

(f) *Unreasonable risk.* The Commission finds that the rule is reasonably necessary to eliminate or reduce an unreasonable risk of injury associated with clothing storage units. (1) Incident data indicates that there were 234 reported tip-over fatalities involving clothing storage units that were reported to have occurred between January 1, 2000 and April 30, 2022, of which 199 involved children, 11 involved adults, and 24 involved seniors. Of the reported child fatalities, 86 percent (171 fatalities) involved children 3 years old or younger.

(2) There were an estimated 84,100 injuries, an annual average of 5,300 estimated injuries, related to clothing storage unit tip overs that were treated in U.S. hospital emergency departments from January 1, 2006 to December 31, 2021. Of these, 72 percent (60,100) were to children, which is an annual average of 3,800 estimated injuries to children over the 16-year period. In addition, there were approximately 58,351 tip-over injuries involving clothing storage units and children treated in other settings from 2007 through 2021, or an average of 3,890 per year. Therefore, combined, there were an estimated 103,100 nonfatal, medically attended tip-over injuries to children from clothing storage units during the years 2007 through 2021.

(3) Injuries to children when clothing storage units tip over can be serious. They include fatal injuries resulting from skull fractures, closed-head injuries, compressional and mechanical asphyxia, and internal organ crushing leading to hemorrhage; they also include serious nonfatal injuries, including skeletal injuries and bone fractures.

(g) *Public interest.* This rule is intended to address an unreasonable risk of injury and death posed by clothing storage units tipping over. The Commission finds that the rule will significantly reduce clothing storage unit tip-over deaths and injuries in the future; thus, the rule is in the public interest.

(h) *Voluntary standards.* The Commission is aware of four voluntary and international standards that are applicable to clothing storage units: ASTM F2057-19, *Standard Consumer Safety Specification for Clothing Storage Units*; AS/NZS 4935: 2009, the Australian/New Zealand Standard for *Domestic furniture – Freestanding chests of drawers, wardrobes and bookshelves/bookcases – determination of stability*; ISO 7171 (2019), the International Organization for Standardization *International Standard for Furniture – Storage Units – Determination of stability*; and EN14749 (2016), the European Standard, *European Standard for Domestic and kitchen storage units and worktops – Safety requirements and test methods*. The Commission finds that these standards are not likely to adequately reduce the risk of injury associated with clothing storage unit tip overs because they do not account for the multiple factors that are commonly present simultaneously during clothing storage unit tip-over incidents and that testing indicates decrease the stability of clothing storage units. These factors include multiple open and filled drawers, carpeted flooring, and dynamic forces generated by children's interactions with the clothing storage unit, such as climbing or pulling on the top drawer.

(i) *Relationship of benefits to costs.* The aggregate benefits of the rule are estimated to be approximately $307.17 million annually and the cost of the rule is estimated to be approximately $250.90 million annually. The Commission finds that the benefits expected from the rule bear a reasonable relationship to the anticipated costs of the rule.

(j) *Least burdensome requirement that would adequately reduce the risk of injury.* (1) The Commission considered less-burdensome alternatives to the rule, but concluded that none of these alternatives would adequately reduce the risk of injury.

(2) The Commission considered relying on voluntary recalls, anti-tip devices, compliance with the voluntary standard, and education campaigns, rather than issuing a mandatory standard. This alternative would be less burdensome by having lower costs, but would be unlikely to reduce the risk of injury from clothing storage unit tip overs. The Commission has relied on

these efforts to date, but despite these efforts, there continue to be a high number of child injuries from clothing storage unit tip overs.

(3) The Commission considered issuing a rule that requires only performance and technical data, with no performance requirements for stability. This would be less burdensome by imposing lower costs on manufacturers, but would not adequately reduce the risk of injury because it relies on manufacturers choosing to offer more stable units; consumer assessment of their need for more stable units (which CPSC's research indicates consumers underestimate); and does not account for clothing storage units outside a child's home or purchased before a child was born.

(4) The Commission considered mandating a standard like ASTM F2057-19, *Standard Consumer Safety Specification for Clothing Storage Units*, but replacing the 50-pound test weight with a 60-pound test weight. This alternative would be less burdensome than the rule because many clothing storage units already meet such a requirement, and it would likely cost less to modify noncompliant units to meet this less stringent standard. However, this alternative would not adequately reduce the risk of tip overs because it does not account for several factors that are simultaneously present in clothing storage unit tip-over incidents and contribute to instability, including multiple open and filled drawers, carpeting, and forces generated by a child interacting with the unit.

(5) The Commission considered establishing a later effective date. This may reduce the cost burden of the rule by spreading the costs over a longer period, but it would also delay the benefits of the rule, in the form of reduced deaths and injuries.

(6) Therefore, the Commission finds that the rule is the least burdensome requirement that would adequately reduce the risk of injury.

§ 1261.9 Severability.

The provisions of this part are separate and severable from one another. If any provision is stayed or determined to be invalid, it is the Commission's intention that the remaining provisions shall continue in effect.

_____

Alberta E. Mills,

Secretary,

Consumer Product Safety Commission.

BLANK PAGE

United States
Consumer Product Safety Commission

Staff Briefing Package
Draft Final Rule for Clothing Storage Units

September 28, 2022

For additional information, contact:

Kristen Talcott, PhD
Clothing Storage Unit Project Manager
Division of Human Factors
Directorate for Engineering Sciences
Office of Hazard Identification and Reduction
Email: ktalcott@cpsc.gov

U.S. Consumer Product Safety Commission
5 Research Place
Rockville, MD 20850

This report was prepared by the CPSC staff. It has not been reviewed or approved by, and may not necessarily reflect the views of, the Commission.

This page intentionally left blank.

Table of Contents

This page intentionally left blank.

Briefing Memorandum

This page intentionally left blank.

United States
Consumer Product Safety Commission

Memorandum

TO: The Commission
Alberta E. Mills, Secretary

DATE: September 28, 2022

THROUGH: Austin C. Schlick, General Counsel

Jason K. Levine, Executive Director

DeWane Ray, Deputy Executive Director for Safety Operations

FROM: Duane E. Boniface, Assistant Executive Director
Office of Hazard Identification and Reduction

Kristen Talcott, PhD, Project Manager
Division of Human Factors, Directorate for Engineering Sciences

SUBJECT: Draft Final Rule for Clothing Storage Units

I. Introduction

In 2017, the U.S. Consumer Product Safety Commission (CPSC, Commission) issued an advance notice of proposed rulemaking (ANPR), contemplating developing a rule to address the risk of injury and death associated with clothing storage unit (CSU) tip overs. 82 Fed. Reg. 56752 (November 30, 2017). The ANPR began a rulemaking proceeding under the Consumer Product Safety Act (CPSA) (15 U.S.C. 2051-2089). On February 3, 2022, the Commission published a notice of proposed rulemaking (NPR) (87 Fed. Reg. 6246), proposing a safety standard to address the risk of injury and death, particularly to children, associated with CSUs tipping over. The proposed rule was issued under sections 7 and 9 of the CPSA, with additional technical information in a hang tag proposed under section 27(e) of the CPSA. The NPR proposed to require CSUs to be tested for stability, exceed minimum stability requirements, be marked and labeled with safety information, and bear a hang tag providing performance and technical data about the stability of the CSU. The Commission requested comments about all aspects of the NPR, including the risk of injury, the proposed requirements, alternatives to the proposed rule, and the economic impacts of the proposed rule and alternatives.

CPSC staff reviewed the information provided in written and oral comments on the NPR and considered additional information in developing a draft final rule. CPSC staff's briefing package for the draft final rule includes:

- Updated data on incidents associated with CSU tip overs (Tab A)

U.S. Consumer Product Safety Commission
4330 East-West Highway
Bethesda, MD 20814

National Product Testing & Evaluation Center
5 Research Place
Rockville, MD 20850

cpsc.gov

- Updated review of injury patterns in CSU tip-over incidents (Tab B)
- Updated review of hazard patterns in the incident data, and the ability of the draft final rule to address them; and additional analysis and recommendations related to human factors components of the draft final rule (Tab C)
- Additional analysis and recommendations related to engineering components of the draft final rule (Tab D)
- Additional analysis and recommendations related to the requirements to provide performance and technical data by labeling (Tab E)
- Updated review of existing voluntary standards (Tab F)
- Recommended regulatory language for the draft final rule (Tab G)
- Regulatory Impact Analysis of the draft final rule (Tab H)
- Regulatory Flexibility Analysis of the draft final rule (Tab I)
- Updated summary of CSU recalls (Tab J)
- Staff response to NPR public comments (Tab K)

This briefing package builds on the information and analysis in the NPR briefing package,[1] with a focus on new and/or updated information; accordingly, a brief overview of that earlier package is provided below. Several reports and memoranda that were included in the NPR briefing package[2] are not duplicated in this draft final rule briefing package because there is no new or updated information for those reports. However, those reports and memoranda support the draft final rule so should be considered part of this briefing package as well. See the NPR briefing package for additional details on staff analysis and supporting data and research.

[1] Boniface, D. E., Talcott, K. (2021) Staff Briefing Package on Draft Notice of Proposed Rulemaking for Clothing Storage Units. U.S. Consumer Product Safety Commission, Bethesda, MD, available at: https://www.cpsc.gov/s3fs-public/Proposed%20Rule-%20Safety%20Standard%20for%20Clothing%20Storage%20Units.pdf

[2] Reports and memorandum that are not duplicated from the NPR briefing package are: Tab L (Staff Testing on the Weight of Clothing in a Filled Drawer), Tab M (Mechanical Evaluation and Analytical Modeling of Incident-Involved Clothing Storage Units), Tab N (FY 2018 Midyear Clothing Storage Unit Testing Program Summary), Tab O (Testing to Assess the Effect of Open/Closed and Filled/Empty Drawers on Clothing Storage Unit Stability), Tab P (Analysis of the Tip-Over Weight for CSUs on Carpet in Combination with Multiple Open and Filled Drawers), Tab Q (Consumer Product Safety Commission (CPSC): Furniture Tipover Report), and Tab R (Forces and Postures During Child Climbing Activities).

II. Overview of the NPR

As detailed in the NPR, there were 226 fatalities resulting from CSU tip-over from 2000 through 2020, including 193 child fatalities. Staff estimated that there were 78,200 CSU tip over-related injuries (an estimated annual average of 5,600 injuries) treated in a U.S. hospital emergency department from 2006 through 2019. Of these, staff estimated that 72 percent (an estimated 56,400 total and an estimated annual average of 4,000) were injuries to children. Incident data suggested that children ages 1, 2, and 3 years old were the most at risk for death and severe injury.

Staff analysis of the hazard showed that there are several factors commonly involved in CSU tip-over incidents, including:

- the dynamic forces generated during a child's interaction with a CSU (*e.g.*, climbing, pulling),
- multiple open and filled drawers, and
- placement on carpet.

Incident data show that these factors often exist simultaneously, and staff and contractor testing demonstrated that these factors decrease the stability of a CSU.

Staff concluded that the current voluntary standards for CSU stability, including the primary voluntary standard, ASTM F2057 – 19, *Standard Consumer Safety Specification for Clothing Storage Units,* were unlikely to eliminate or adequately reduce the risk of injury associated with tip overs for several reasons, including: (1) they did not consider the dynamic forces that can occur when a child interacts with a CSU; (2) they did not consider the effect of filled extendable elements (drawer(s) and/or pull-out shelf/shelves) or carpeting on CSU stability; and (3) they did not account for the combination of multiple factors, resulting from real-world use, that contribute to CSU instability (*e.g.*, a child climbing a CSU with multiple open and filled drawers).

Based on this information, the NPR proposed to apply testing, performance, labeling, and hang tag requirements to CSUs. The NPR defined a CSU as a freestanding furniture item, with drawer(s) and/or door(s), that may be reasonably expected to be used for storing clothing, that is greater than or equal to 27 inches in height, and with a total functional volume of the closed storage greater than 1.3 cubic feet and greater than the sum of the total functional volume of the open storage and the total volume of the open space. The NPR also proposed to exclude from the scope of the rule clothes lockers and portable storage closets, because of a lack of incidents involving such units. although they may meet the definition of a CSU.

The proposed requirements to address the hazard patterns in CSU tip-over incidents were based on a review of incident data, comments received in response to the ANPR, incident analyses, results from contractor studies, and staff testing. The stability requirements involved determining the tip-over moment ("moment" in this context refers to the physics term for the mathematical expression of a rotational force acting about a pivot point, or fulcrum) of a CSU

when it had all extendable elements open and filled with a clothing-representative load, and was on an angled surface simulating the effect of carpeting. Staff proposed two test methods that could be used to determine tip-over moment of the unit: Test Method 1, for units with drawers or pull-out shelves, and Test Method 2 for any unit. This tip-over moment had to exceed three comparison tip-over moments (as applicable) that reflected the forces from a 95th percentile 3-year-old child's interaction with the CSU. The first comparison moment reflected a child ascending the CSU, the second modeled a child hanging on a door of the CSU, and the third comparison reflected a child pulling on/opening the top drawer of the CSU.

These proposed stability requirements accounted for the effects of dynamic forces and forces resulting from the position of a climbing child, forces from a child pulling, the destabilizing effects of carpeting, and the effects of multiple loaded and open drawers on CSUs. Testing also included tests of interlock systems, to allow for these systems that limit the number of extendable elements open at one time. Interlocks may be used to improve the stability of a CSU, so the test requirements were intended to ensure that such features would function effectively. The NPR also proposed requirements for a warning label to inform consumers about the tip-over hazard and provide ways they may reduce the hazard. The NPR also included requirements for an identification label to provide information about the manufacturer and model to facilitate compliance and recalls. Finally, the NPR proposed to require a hang tag to provide performance and technical data. The hang tag provided a stability rating to provide consumers with information relevant to buying decisions, and also included related information to inform consumers about CSU stability.

III. Discussion

Based on comments received in response to the NPR, along with additional staff analysis, staff recommends revising several requirements in the final rule. This section provides an overview of the key provisions of the draft final rule, including the revisions to the NPR's proposed rule that staff recommends.

Product Review

Description

The draft final rule defines a CSU as having the following features:

- freestanding furniture item with drawer(s) and/or door(s),
- may be reasonably expected to be used for storing clothing,
- is designed to be configured to greater than or equal to 27 inches in height,

- has a total functional volume of the closed storage greater than 1.3 cubic feet, and has a total functional volume of the closed storage greater than the sum of the total functional volume of the open storage and the total volume of the open space, and
- has a mass greater than or equal to 57 pounds with all extendable elements filled with at least 8.5 (pounds/cubic foot) times the functional volume (cubic feet). (Note that this criterion is being added to the draft final rule to address lightweight CSUs and is discussed in more detail below.)

The draft final rule further specifies:

> *Common names for clothing storage units include, but are not limited to: chests, bureaus, dressers, armoires, wardrobes, chests of drawers, drawer chests, chifforobes, and door chests. Whether a product is a clothing storage unit depends on whether it meets this definition. Some products that, depending on their design, may not meet the criteria in this definition and, therefore, may not be considered clothing storage units are: shelving units, office furniture, dining room furniture, laundry hampers, built-in closets, and single-compartment closed rigid boxes (storage chests).*

The draft final rule also includes specific exemptions for clothes lockers and portable storage closets. Figure 1 shows examples of CSUs.

Figure 1. Examples of CSUs.

CSUs are available in a variety of designs (e.g., vertical or horizontal dressers), sizes (e.g., weights and heights), dimensions, and materials (*e.g.*, wood, plastic, leather, manufactured wood or fiber board). Consumers may purchase CSUs that have been assembled by the manufacturer, or they may purchase CSUs as ready-to-assemble (RTA) furniture. CSUs may be marketed, packaged, or displayed as intended for children 12 years old and younger. However, CSUs are more commonly general-use products that are not specifically intended or marketed for children 12 years old and younger. The draft final rule applies to both children's products and non-children's products.

CSU Market (see Tab H)

As discussed in Tab H, retail prices of CSUs vary substantially, ranging from less than $100 to several thousand dollars. The less expensive units may be in use for only a few years, while the most expensive units may remain in use for decades, and possibly passed from one generation to the next. Staff estimates the average price of in-scope CSUs to be $338.50, based in part on estimates provided by CSU industry commenters on the NPR.

Staff estimates that the annual sales revenue of CSUs within the scope of the draft final rule is $6.99 billion, and that 20.64 million CSUs were sold in 2021. A large majority of these CSUs were likely imported, mainly from Asia. Staff estimates that the number of new CSU models in 2021 was around 2,064. Using historical sales estimates, staff estimates there were 229.94 million in-scope CSUs, representing 6,365 models, in use in 2021.

Updated Incident Data Analysis

New CSU Tip-Over Incident Data

The draft final rule briefing package includes incident data analyzed for the NPR, as well as new incident data received after the timeframes in the NPR. These new data include:

- 8 fatal incidents that were reported to CPSC between January 1, 2021 and April 30, 2022.
    - six involving children ages 17 years and younger (one in 2020 and five in 2021), and
    - two involving seniors 65 years and older (one in 2019 and one in 2022).
- 154 nonfatal CPSRMS-reported incidents that were reported to CPSC between January 1, 2021 and April 30, 2022. These incidents include incidents going back to 2014 that were not previously reported.
- 239 NEISS-reported incidents that occurred from January 1, 2021, through December 31, 2021.

The draft final rule briefing package also includes some changes to the data that appeared in the NPR briefing package, which are based on follow-up analysis and new information, as

described in Tab A; however, these data were substantially similar to those in the NPR. There were also changes to the subset of data used in the hazard analysis and determination of compliant units, which are described in Tab C and Tab F.

Epidemiological Analysis (see Tab A)

In Tab A, staff from the Directorate for Epidemiology, Division of Hazard Analysis (EPHA) provide analysis of reported CSU tip-over-related fatalities, nonfatal incidents and injuries, and ED-treated injuries. Staff identified 234 CSU instability or tip-over fatalities that occurred between January 1, 2000 and April 30, 2022. The fatalities include: 199 children (under 18 years old), 11 adults (18-64 years old), and 24 seniors (65 years old and older). Forty eight percent of child fatalities, and 97 percent of adult or senior fatalities, involved CSU tip-over without a television. A majority of the incidents: 98 percent of child fatalities, and 89 percent of adult or senior fatalities, involved a chest, bureau, or dresser. Consistent with the data in the NPR, the majority of the reported CSU instability or tip over fatalities were children; the highest number of fatalities were 1-year-old and 2-year-old children, followed by 3-year-old children. In 94 percent of the fatal tip-over incidents involving children and CSUs without televisions, the victim was 3 years old or younger; this age group constituted 79 percent of the fatalities involving CSUs with televisions.[3]

Staff identified 1,152 reported nonfatal CPSRMS CSU instability or tip-over incidents involving children, adults, or seniors, including 743 reported injuries, that occurred between January 1, 2005 and April 31, 2022. These injuries included those with an unknown level of care (43%), seen by a medical professional (5%), emergency department treatment received (43%), and hospital admission (9%).

Based on data from NEISS, CPSC staff estimates that there were 84,100 CSU tip over-related injuries (an estimated annual average of 5,600 injuries) treated in a U.S. hospital emergency department from January 1, 2006 to December 31, 2021. Of these, staff estimates that 72 percent (an estimated 60,100 total) were injuries to children. Staff estimates that there were between about 1,800 and 5,900 emergency department-treated CSU tip over-related injuries to children for each year from 2006–2021. Seventy three percent of the estimated emergency department-treated CSU tip over-related injuries to children involved CSUs without televisions.

Overall, data were similar to those presented in the NPR. Additional analysis is provided in Tab A.

[3] In the analyses, staff also distinguish between incidents that involved both a CSU and a television, and those that involve a CSU only because the presence of a television changes the mechanism of injury and may influence the hazard pattern because of the presence of a second product. In addition, in recent years (from 2010 to 2019), there was a statistically significant linear decline in child injuries involving all CSUs (including televisions), but there was no linear trend detected in injuries to children involving CSU-only tip overs. The decrease in the number of CSU tip-over incidents to children appeared to be driven by a decline in tip overs involving televisions, likely because of the marketplace change from heavier cathode ray tube (CRT) televisions to lighter flat screen models.

Interaction Scenarios (see Tab C)

Climbing and opening drawers are the most common reported interactions for tip-over incidents involving children and CSUs without televisions: 76 percent of fatal and 77 percent of nonfatal NEISS incidents with a reported interaction involved climbing; 54 percent of the nonfatal CPSRMS incidents with a reported interaction involved opening drawers. Other interactions include: sitting, laying or standing in a drawer; putting items into, or taking them out of, a drawer; playing in drawers; leaning or pushing down on a drawer; pulling, hanging, and swinging on the CSU; hitting the CSU; and jumping from the CSU.

Other Use-Related Factors that Can Decrease CSU Stability (see Tab C)

In the NPR, staff provided data and analysis that showed that open filled drawers and placing the CSU on a carpeted floor surface decreases stability. Data presented in Tab C of this briefing package are consistent with those presented in the NPR briefing package. Data show:

- For incidents with reported drawer fill level, most involved partially filled or full drawers (95 percent of fatal and 90 percent of nonfatal CPSRMS incidents involving children and CSUs without televisions).
- For the incidents where floor surface was reported, carpet was by far the most prevalent: in 81% of fatal and 74% of nonfatal CPSRMS incidents involving children and CSUs without televisions, the CSUs were on carpet. The second most prevalent reported flooring under a CSU was hardwood or wood; there were also a small number of incidents on tile or linoleum, and one in which the front legs of the CSU were on carpet and the back legs were on wood. A majority of the carpet in fatal incidents appears to have been wall-to-wall cut pile carpet; a small number of fatal incidents involved wall-to-wall looped pile carpet.

Injury Type and Severity (see Tab B)

Health Sciences staff documented the incidences of CSU tip-overs involving children, which have resulted in a range of nonfatal injuries as well as death. In both nonfatal and fatal CSU tip-over incidents involving children, the most common body parts injured were the head, neck and torso.

These injuries to head, neck, and torso result from blunt force trauma to the head and/or sustained application of force to the chest and neck, which can result in respiratory or circulatory system impairment or both. Blunt force trauma to the head can be the cause of an immediate fatal blow. If the product falls on a child's torso and the child is not immediately rescued, it may result in internal bleeding and organ failure. Sustained application of a force on the chest can lead to compressional asphyxia and death, while sustained pressure on the neck can lead to asphyxia by strangulation.

Most CSU tip-over fatalities involved children 1-year-old and 2-years-old, followed by 3-years-old. These incidents often happen in the bedroom where a child has been left alone to sleep, making it unlikely that a parent/caregiver becomes aware of the incident in time to rescue the child. Almost immediate rescue is critical for a good outcome, although in cases involving severe head injuries, fatalities occur despite rapid intervention. The likelihood of mitigating the severity of injuries is reduced in young children because of their susceptibility to severe injury and their limited ability to self-rescue.

Voluntary Standards Assessment (Tab F)

ASTM F2057 – 19

In the United States, the primary voluntary standard that addresses CSU stability is ASTM F2057 – 19, *Standard Consumer Safety Specification for Clothing Storage Units*. As discussed in Tab F of the NPR briefing package, ASTM F2057 – 19 has two stability requirements:

1. Stability of Unloaded Unit (test method described in Section 7.1): The CSU shall not tip over when all doors are opened 90° and all drawers are pulled to the outstop[4] or in the absence of such a feature, 2/3 of its operational sliding length.[5] This test is conducted on an unfilled CSU placed on a hard, flat, level test surface, and no additional force is added to the CSU beyond those from the open extendable elements.
2. Stability with Load (test method described in Section 7.2): The CSU shall not tip over when the 50-pound test weight ("load") is applied over the front of each drawer pulled to the outstop or, in the absence of such a feature, 2/3 of its operational sliding length, with only one drawer open at a time. For units with doors, the same test applies, but the test weight is applied to "each door so that the outer edge of the test weight is flush with the outermost upper corner of the door," when the door is opened to 90° (this results in the load being centered approximately 3 inches from the door edge). This test is conducted on an unfilled CSU placed on a hard, flat, level surface.

ASTM F2057 – 19 requires that CSUs be permanently marked with the specified warning with text describing the hazard, and addressing the use of tip restraints.[6] ASTM F2057 – 19 also requires CSUs to include a tip restraint that complies with ASTM F3096 – 14, *Standard Performance Specification for Tipover Restraint(s) Used with Clothing Storage Unit(s)*.

[4] ASTM F2057 – 19 defines "outstop" as "any feature that limits outward motion of drawers or pullout shelves, or both."
[5] ASTM F2057 – 19 defines "operational sliding length" as "length measured from the inside face of the drawer back to the inside face of the drawer front with measurements taken at the shortest drawer depth dimension."
[6] A tip restraint is a supplemental device, often a strap or bracket, that provides additional resistance to tip over by connecting the CSU to the wall.

Effectiveness of and Compliance with the ASTM F2057 Stability Requirements

For the NPR, staff assessed ASTM F2057 – 19 and concluded that it does not adequately address the CSU tip-over hazard. This is because the standard does not account for the multiple factors that are demonstrated in incident data that contribute to instability and may occur simultaneously, including multiple open and filled drawers, the effect of carpet, and forces generated by interactions with the CSU. Staff also provided data showing that multiple CSUs involved in tip-over incidents comply with ASTM F2057 – 19, indicating that it does not adequately address the hazard.

In the NPR briefing package, staff also assessed market compliance with ASTM F2057 – 19 stability requirements. As reported in the NPR briefing package, staff tested 188 CSUs, and determined that 91 percent met the stability requirements of ASTM F2057 – 17 sections 7.1 and 7.2, which are the same as those in ASTM F2057 – 19. Staff concluded that the results suggested that a majority of CSUs on the market meet the stability requirements of ASTM F2057 – 19. See Tab N of the NPR briefing package for additional details on this testing.[7]

The ASTM standard has not been updated since the NPR. As such, staff's assessment of the effectiveness of the standard remains the same. In Tab F of this briefing package, staff updated their assessment of whether incident-involved units met the stability requirements of ASTM F2057 – 19. Of the 95 fatal CPSRMS tip-over incidents involving children and CSUs without televisions, CPSC staff determined that two CSUs clearly met the ASTM F2057 – 19 stability requirements, one CSU met the ASTM F2057 – 19 stability requirements in some conditions, and 11 units did not meet the ASTM F2057 – 19 stability requirements. For the remaining 81 units, staff was unable to determine whether they met the requirements because staff lacked information on the specific unit involved and/or did not have a test report or sample. Of the 366 nonfatal CPSRMS incidents involving children and CSUs without televisions, CPSC staff determined that 50 CSUs met the ASTM F2057 – 19 stability requirements, 3 units were out-of-scope, and 105 did not meet the ASTM F2057 – 19 stability requirements. For the remaining 207 units, staff was unable to determine whether the units met the requirements because staff lacked information on the specific unit involved and/or did not have a test report or sample. These results contribute to staff's assessment that the requirements in ASTM F2057 – 19 do not adequately reduce the risk of injury associated with CSU tip overs.

Potential Changes to the ASTM standard

ASTM F2057 – 19 is still the current version of the ASTM standard. However, at the November 2021 ASTM F15.42 Furniture Subcommittee meeting, subcommittee members started discussion on possible changes to the stability requirements in the F2057 standard. These

[7] Sanborn, M. (2021.) Tab N: FY 2018 Midyear Clothing Storage Unit Testing Program Summary. Staff Briefing Package: Draft Notice of Proposed Rulemaking for Clothing Storage Units. U.S. Consumer Product Safety Commission, Bethesda, MD. Available at: https://cpsc.gov/s3fs-public/Proposed%20Rule-%20Safety%20Standard%20for%20Clothing%20Storage%20Units.pdf.

changes were discussed along with other possible changes to the standard that had been in-work at the time staff prepared the NPR briefing package. ASTM balloted most of the possible changes in early May 2022 (Items 1-8 in F15 (22-06)). Additional changes were balloted in late May 2022 (Item 1 in F15 (22-07)), and July 2022 (Items 1-8 in F15 (22-11)).[8] The possible changes to the stability requirements and associated tests, compared to the current stability requirements and tests, are summarized in Table 1.

Table 1. Summary of Stability Tests in ASTM F2057 – 19 and Possible Changes

Section	ASTM F2057 – 19	Possible Changes
7.1	• CSU on a flat level surface • All extendable elements (drawers and pullout shelves) and doors open • No fill weight in extendable elements • No additional force	• CSU on a flat level surface • All extendable elements and doors open* • Extendable elements loaded with 8.5 pounds per cubic foot of their volume (fill weight),** space behind doors loaded with 8.5 pounds per cubic foot of half of their volume • No additional force
7.2	• CSU on a flat level surface • One extendable element open • No fill weight in extendable elements • 50-pound weight applied to face of open extendable element	• Back feet of CSU on 0.43-inch block • All extendable elements and doors open* • No fill weight in extendable elements • 60-pound weight applied to face of open extendable element
New test	N/A	• CSU on a flat level surface • All extendable elements and doors open* • No fill weight in extendable elements • 10-pound outward horizontal force applied to highest reach point 56 inches or below

*Except those that are interlocked with an interlock that meets specified requirements, including a 30-pound pull test.
** Interlocked extendable elements are only loaded with a fill weight if 50% or more, by volume, are open.

Staff assesses that these changes, if enacted, would not adequately address the hazards because they fail to address multiple real-world conditions simultaneously; and they fail to apply an adequate tipping moment to the CSU to simulate the interactions seen in the hazard patterns, based on the climbing forces identified by the child climbing study[9] and pull forces in child strength literature. Staff has also expressed concern with other balloted changes to the

[8] Summary of ballot items provided in Tab F, Appendix F1.
[9] Reed, M., Ebert, S., Jones, M. (2020.) Forces and Postures During Child Climbing Activities. Technical Report, University of Michigan Transportation Research Institute (Tab R). Staff Briefing Package: Draft Notice of Proposed Rulemaking for Clothing Storage Units. U.S. Consumer Product Safety Commission, Bethesda, MD. Available at: https://cpsc.gov/s3fs-public/Proposed%20Rule-%20Safety%20Standard%20for%20Clothing%20Storage%20Units.pdf.

standard, including those relating to warning labels, scope and definitions, and requirements for interlocks.[10]

Because staff received comments on the NPR that addressed the ASTM process and the possible changes to the standard, staff has considered these changes in the response to comments (Tab K) and engineering analysis (Tab D). Staff has also added discussion of an additional regulatory alternative to reflect the potential new ASTM standard.

As of September 28, 2022, ASTM has not published a new version of the ASTM F2057 standard. As such, the staff assessment of ASTM F2057 – 19 in Tab F of the NPR briefing package, and the reasons discussed in that memorandum for why the existing standard does not adequately reduce the risk of injury associated with CSU tip overs, remains the same. Staff does not know if, or when, or in what form, any updated standard will be published. Therefore, until ASTM publishes an updated standard, staff cannot conclusively assess it or the likely level of compliance that will come with it. To issue a final rule, section 9 of the CPSA requires the Commission to make a finding regarding the effectiveness of and level of compliance with a standard that is "in existence," meaning approved by the voluntary standards organization. ASTM has not yet approved the balloted draft voluntary standard.

Other CSU-Related Standards

As discussed in the NPR, staff identified four other consumer safety specifications related to CSUs:

- AS/NZS 4935:2009, the Australian/New Zealand Standard for Domestic furniture – Freestanding chests of drawers, wardrobes and bookshelves/bookcases – determination of stability;
- ISO 7171 (2019), the International Organization for Standardization International Standard for Furniture – Storage Units – Determination of stability;
- EN14749:2016, the European Standard, European Standard for Domestic and kitchen storage units and worktops – Safety requirements and test methods.
- ANSI/SOHO S6.5-2008 (R2013), *Small Office/Home Office Furniture – Tests American National Standard for Office Furnishings*, which is not a CSU standard, but has requirements for interlock systems that may be transferrable to CSUs.

On April 5, 2022, ANSI/BIFMA published X6.5-2022 Home Office and Occasional-Use Table and Storage Products, replacing ANSI/SOHO S6.5 (R2013). Staff reviewed the interlock strength test methods in the new version of the standard and found them to be identical to the previous version. Staff's analysis of the content and adequacy of these standards remains the same as that in the NPR briefing package. See Tab F of the NPR briefing package for a

[10] CPSC staff statements for negative votes provided in Tab F, Appendix F2.

detailed explanation of why these standards are not likely to adequately reduce the risk of injury associated with CSU tip overs.

Recalls (See Tab J)

From January 1, 2000 – July 1, 2022, there were 43 consumer-level recalls conducted in response to tip-over and entrapment hazards of CSUs involving 38 different firms. The recalled products were responsible for 341 tip-over incidents, including reports of 152 injuries and 12 fatalities.[11] The 12 fatal incidents all involved children 3 years old or younger and most likely occurred when the CSU tipped over as a result of a child climbing, getting inside drawers, or opening the drawers.[12] The recalls affected approximately 21,530,000 CSUs in total.

Response to Comments on the NPR

The NPR request for comments and information included all aspects of the NPR, along with specific requests for additional data, studies, and alternatives. CPSC received 66 written comments during the comment period, which closed on April 19, 2022. Four of these comments were duplicate submissions; and one was non-responsive. CPSC also received eight oral comments during the CSU oral hearing, which was held on April 6, 2022. In Tab K, staff summarizes the comments and provides technical responses to the issues raised. Additional detailed responses are provided throughout the briefing package, as appropriate, where comments led to changes in the draft final rule.

Comment topics included epidemiological analysis; scope, including definitions and exemptions; warning and identification labeling; interactions; tip restraints; hang tags; interlocks; stability testing, including CSU assembly and configuration, fulcrum, carpet, fill weights, Test Method 1 and Test Method 2, and clothing-representative load; voluntary standards; costs, including cost of compliance and costs to consumers; effective date; stockpiling; injury cost model; regulatory alternatives; certification; CPSC staff testing; and contractor studies. Full responses are provided in Tab K.

[11] The remaining incidents did not result in injury, or did not indicate whether an injury occurred.
[12] Eleven of the 12 fatal incidents involving recalled products are in the data set analyzed for this briefing package (all involving children and CSUs without televisions); the remaining fatal incident occurred in 1989, so is outside the period analyzed in this briefing package.

IV. Recommended Requirements for Draft Final Rule

Recommended Changes from the NPR Regulatory Text

Based on staff analysis and public comment, staff recommend the following changes from the NPR:

Changes to Scope and Definitions

- Make editorial changes to the "Application" section of the scope and the definition of CSU to align with statutory language. (See staff analysis in Tab C.)
- To address comments and staff's analysis regarding lightweight units: amend the definition of a CSU to include only units that weigh 57 or more pounds when all extendable elements are filled with a clothing-representative load. (See staff analysis in Tabs C and D.)
- To account for CSUs with adjustable heights, amend the definition of CSUs to include units that "can be configured to" 27 inches in height or greater. (See staff analysis in Tab D.)
- To clarify the definition of drawer and address comments on furniture components that do not reasonably function as drawers: amend the definition of drawer to include only components that are retained in the case (do not fall out) when extended up to ⅔ of their length, when empty. (See staff analysis in Tab C.)
- To clarify the definition of "freestanding" and address comments indicating confusion about this term, revise the definition of freestanding to indicate that it means a unit that "remains upright, without requiring attachment to the wall or other upright rigid structure, when it is fully assembled and empty, and in its use position, with all extendable elements closed." Staff also recommends removing from the definition the explanation that units intended to be permanently attached to the building structure, other than by tip restraints, are not considered freestanding and removing kitchen cabinets and bathroom vanities as examples of units that are intended to be permanently installed. (See staff analysis in Tab C.)
- To clarify the definition of open storage and address comments, revise the definition of open storage to: "space within the frame of the furniture, that is open (*i.e.*, is not in a drawer or behind an opaque door) and that can be reasonably used for storage (*e.g.*, has a flat bottom surface). For example, open shelf space that is not behind a door, display space behind a non-opaque door, and framed open clothing hanging space are considered open storage." (See staff analysis in Tab C.)

- To clarify the definition of open space and address comments, revise the definition of open space to: "space within the frame of the furniture, but without a bottom surface. For example, open space between legs, such as with a console table, or between separated storage components, such as with a vanity or a desk are considered open space. This definition does not include space inside the furniture case (*e.g.*, space between a drawer and the interior sides) or any other space that is not visible to a consumer standing in front of the unit (*e.g.*, space behind a base panel)." (See staff analysis in Tab C.)
- Add a definition for "extendable elements" to indicate it includes drawers and pull-out shelves, to provide a concise way to refer to both of these features, consistent with industry practice.
- Clarify the fulcrum definition and related measurements to address commenter concerns about the consistency of distance measurements in the stability test. (See staff analysis in Tab D.)
- To clarify the definition of maximum handhold height and address comments, revise the definition of maximum handhold height to: "the highest position at which a child may grab hold of the CSU, measured while the CSU is on a hard, level, and flat test surface. For units shorter than 4.12 feet, this is the top of the CSU. For units 4.12 feet or taller, this is 4.12 feet." Revise associated figure to clarify definition. (See staff analysis in Tab C.)
- Revise the tip over definition to align with definitions in voluntary standards and to allow CSUs to benefit from a greater range of design features that enhance stability. (See staff analysis in Tab D.)

Changes to Test Method

- In response to comments recommending an easier method of simulating carpet, replace the 1.5° forward tilt angle with a test block, at least 0.43-inches thick, at the rear of the CSU. A 0.43-inch test block also simulates the effect of carpet and the range of angles discussed in the NPR. (See staff analysis in Tab D.)
- Clarify that interlocks can interact with extendable elements and doors, not just drawers, and revise the interlock test for greater clarity and to accommodate various interlock designs. (See staff analysis in Tab D.)
- Clarify placement orientation of the CSU on the test surface to remove overestimates of stability relating to placing a CSU in a more stable orientation than level. (See staff analysis in Tab D.)
- To reflect the intent of the rule to assess stability on a carpeted surface and comments that consumers would not level for carpet, remove the allowance to level a CSU per instructions for a carpeted surface. (See staff analysis in Tab D.)

- To address comments that there needs to be an allowance for variability in determining the 8.5 pounds per cubic foot of functional volume fill density and position of fill weight, clarify fill density and position of the fill weight. (See staff analysis in Tab D.)
- To address commenter concerns that how the test weight is applied in Test Method 1 can affect results, revise Test Method 1 to specify that the force is to be applied using weights. (See staff analysis in Tab D.)
- To address commenter concerns that Test Method 1 and Test Method 2 may yield varied results for the same unit, specify that each test method only applies to certain CSUs, without overlap. (See staff analysis in Tab D.)
- To provide greater flexibility for conducting Test Method 2, revise the force application point to allow for testers to determine the appropriate point. (See staff analysis in Tab D.)
- Revise language for potential repairs to allow appropriate component repairs and replacements, to complete the test. (See staff analysis in Tab D.)

Changes to Requirements for Marking and Labeling

- To increase comprehension of the warning label: replace the child climbing symbol from ASTM F2057 – 19 with the three-panel child climbing symbol from the CPSC contractor report, shown in Figure 2. Allow modification of the third panel (the one depicting attachment to the wall) to show a specific anti-tip device included with the unit, and add a requirement that the content of the warning label cannot be modified or amended except as specifically indicated. These revisions address comments regarding the symbol. (See staff analysis in Tab C.)

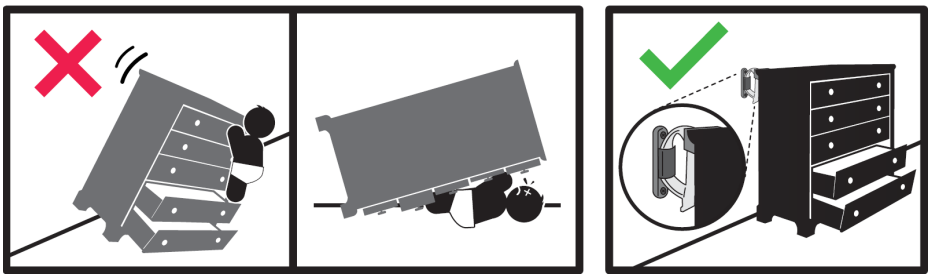

Figure 2. Three panel child climbing symbol.

- To address commenter confusion and clarify that the identification label information (regarding manufacturer, model, etc.) need not be on a paper-style label, revise the subparagraph title to “Identification Marking or Labeling Requirements” and revise all references to the “identification label” to the “identification mark or label.” (See staff analysis in Tab C.)

Changes to Requirements to Provide Performance and Technical Data by Labeling (Hang Tag)

- To address comments on the hang tag content: add a brief explanation of the rating to the front of the tag, "This unit is [rating value] times more stable than the minimum required." (See staff analysis in Tab E.)
- To address comments on hang tag scale: narrow the scale to a maximum of 2 based on the products on the market that will need modifications to reach a rating of 1 and the low likelihood that products will exceed a rating of 2 in the near term. (See staff analysis in Tab E.)
- To address comments on consumers' ability to review stability ratings at the time of purchase when purchasing products online: require the hang tag information to be displayed on manufacturer online sales interfaces (*e.g.*, websites or apps). (See staff analysis in Tab E.)

Other Changes

- Staff also recommends editorial changes that will improve readability, fix typographical errors, and remove redundant language.

Recommended Draft Final Rule Scope and Definitions and Performance Requirements

This section covers the recommended scope and performance requirements. The recommended regulatory text is provided in the draft final rule and Tab G.

Scope and Definitions

The draft final rule covers CSUs, which are defined as a freestanding furniture items, with drawer(s) and/or door(s), that may be reasonably expected to be used for storing clothing, that are designed to be configured to greater than or equal to 27 inches in height, have a mass greater than or equal to 57 pounds with all extendable elements filled with at least 8.5 pounds/cubic foot times their functional volume (cubic feet), have a total functional volume of the closed storage greater than 1.3 cubic feet, and have a total functional volume of the closed storage greater than the sum of the total functional volume of the open storage and the total volume of the open space. Common names for CSUs include, but are not limited to: chests, bureaus, dressers, armoires, wardrobes, chests of drawers, drawer chests, chifforobes, and door chests. Whether a product is a clothing storage unit depends on whether it meets this definition, however, some examples of furniture items that, depending on their design, may not meet the criteria in this definition and, therefore, may not be considered clothing storage units are: shelving units, office furniture, dining room furniture, laundry hampers, built-in closets, and single-compartment closed rigid boxes (storage chests).

This recommended definition includes several features/factors that staff considers necessary, based on incident information and the tip-over hazard, to distinguish products that are and are not subject to the draft rule; these include whether the unit is freestanding, whether the unit may be reasonably expected to be used for storing clothing, the height of the unit, and the closed storage of the unit behind doors and/or drawers. Rationale for these factors is provided in Tab C of the NPR briefing package.

Performance Requirements

As discussed in the NPR briefing package, staff developed recommended requirements to address and account for the multiple hazard patterns involved in CSU tip-over incidents. The recommended requirements are based on a review of incident data, incident analyses, results from the child climbing study, and staff testing. The recommended performance requirements involve determining the tip-over moment of a CSU when it has multiple open and filled drawers, and is on a surface simulating the effect of carpeting. To assess whether the CSU is sufficiently stable, the tip-over moment must exceed 3 comparison tip-over moments, each of which represents a 95th percentile 3-year-old child's interaction with the CSU. The first comparison tip-over moment reflects the child ascending the CSU, the second comparison reflects a child hanging on the door of the CSU, and the third comparison reflects a child pulling on the CSU.

The following are staff's recommended requirements:

- Test Condition
    - *Carpet simulation.* Tip the CSU forward using a block that is at least 0.43 inches thick to simulate the effect of carpeting. In the NPR briefing package, staff concluded that a forward tilt angle of 1.5° replicated the effects of carpeting on CSU stability. Based on analysis in Tab D, staff assess that the 0.43-inch block is a reliable and repeatable way to simulate the effect of carpet and the range of angles discussed in the NPR.
    - *Open extendable elements and doors.* Test with all doors open to the least stable configuration, and all extendable elements (drawers and pull-out shelves fully extended); for CSUs with interlocks that pass interlock testing (see below), test with all extendable elements and doors that are not locked by the interlock system open to the least stable configuration.
    - *Fill*. Fill all open extendable elements with at least 8.5 pounds per cubic foot of functional volume, and fill all closed extendable elements with no more than 8.5 pounds per cubic foot of functional volume, with the weight placed at the center of the extendable element if half or more of the extendable elements by functional volume are open as shown in Figure 3a. If less than half of the extendable elements by functional volume are open, do not place a fill weight in any extendable elements, as shown in Figure 3b.

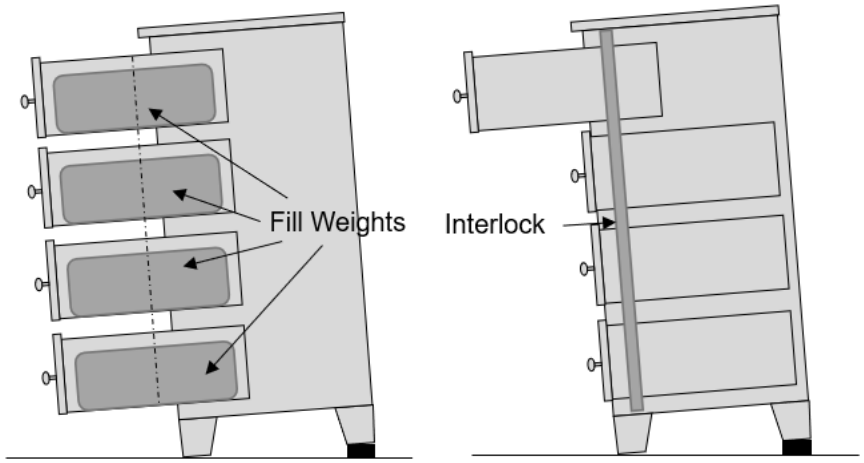

Figure 3a Figure 3b

Figure 3. All extendable elements are opened to the maximum extension and filled with 8.5 pounds per cubic foot of functional volume during the test (3a) unless an interlock or other means prevents more than half the extendable elements by volume to be extended simultaneously (3b).

- Stability Test
  - *Apply force and calculate tip-over moment*. Depending on the design of the unit, use one of two methods to apply force to the CSU to identify the force required to cause the CSU to tip over and to calculate the tip-over moment (Figure 4).
    1. For units with extendable elements that extend at least 6 inches from the fulcrum: Gradually apply over a period of at least 5 seconds weights to the face of an extended extendable element to cause the unit to tip over. Record the tip-over force. Calculate the tip-over moment of the unit by multiplying the tip-over force (pounds) by the horizontal distance from the center of force application to the fulcrum (feet).
    2. For any unit for which Test Method 1 does not apply: Gradually apply over a period of at least 5 seconds a horizontal force to the back of the unit orthogonal to the fulcrum to cause the unit to tip over. Record the tip-over force. Calculate the tip-over moment of the unit by multiplying the tip-over force (pounds) by the vertical distance from the force application point to the fulcrum (feet).

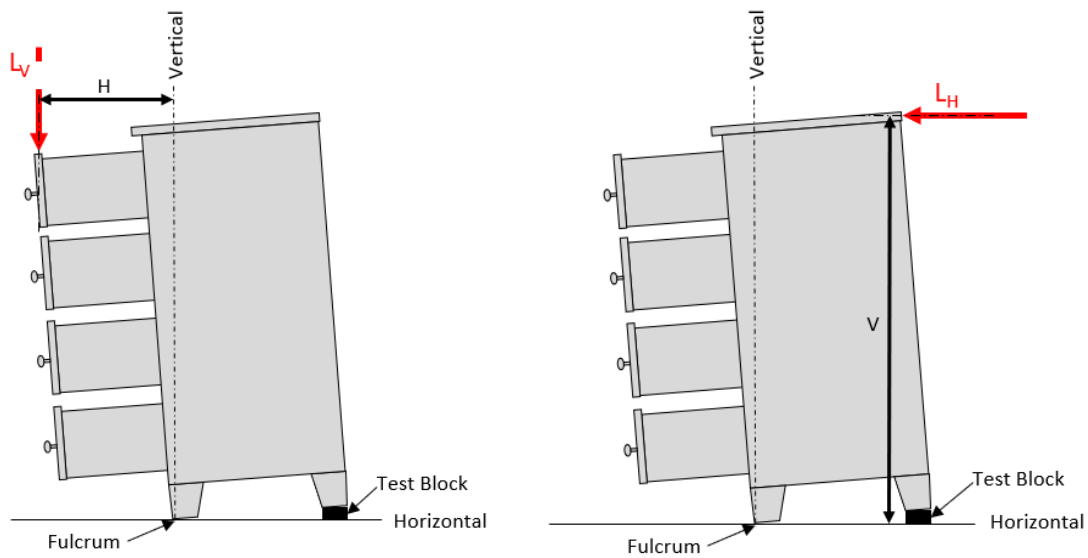

Figure 4. Illustration of force application methods: a) vertical load L_V, and b) horizontal load L_H.

- *Assess Tip-Over Moment.* The tip-over moment of the unit shall be compared to the following three moments, (a) moment associated with children ascending a CSU, (b) hanging on a CSU door and (c) pulling on the CSU, using the 95th percentile 3-year-old weight of 51.2 pounds and the pull strength of a 2-5-year-old child as a basis for this comparison.

  The *tip-over moment* of the unit must be greater than all of the following applicable moments:

  a. [for units with extendable element(s)] 55.3 pounds times the extendable element extension from fulcrum distance in feet + 26.6 pounds feet.
  b. [for units with a door(s)] 51.2 pounds times the door extension from fulcrum distance in feet – 12.8 pounds feet.
  c. [for all units] 17.2 pounds times maximum handhold height in feet.

- Interlock Test

  - If the CSU has an interlock system that prevents extendable elements or doors from opening, first assess the integrity of that interlock by applying a 30-pound horizontal pull force to the extendable element or door. If the interlock fails, resulting in the extendable element opening unintentionally or the interlock being damaged, the interlock will be disabled or bypassed for the stability test.

See Tab D of the NPR briefing package for a detailed explanation of the rationale for these requirements.

Certification and Notice of Requirements

In the NPR, the Commission proposed to amend 16 CFR part 1112 to include CSUs that are children's products in the list of children's product safety rules for which CPSC has issued Notice of Requirements (NORs). Staff make the same recommendation for the FR. Commission approval of accreditation requirements for the testing of CSUs that are children's products will make effective the third party testing and certification requirement for CSUs that are children's products and that are manufactured more than 90 days after the Commission has established and published an NOR for the accreditation of third party conformity assessment bodies to assess conformity with the children's product safety rule.

Effective Date

The CPSA specifies that for section 7 and 9 rules, the effective date must be at least 30 days after the date the rule is promulgated, "unless the Commission for good cause shown determines that an earlier effective date is in the public interest." The effective date must be no more than 180 days after the date the rule is promulgated, "unless the Commission finds, for good cause shown, that a later effective date is in the public interest and publishes its reasons for such finding." In the NPR briefing package, staff recommended a 180-day effective date based on the expected time and costs needed for nearly all CSUs on the market to be modified to comply with the standard. In the NPR, the Commission voted to set the effective date at 30 days from publication to ensure the safety benefits of the rule begin almost immediately.

During the comment period, many commenters representing manufacturers and retailers stated that the effective date should be much longer than 30 days due to long lead times for redesigning, testing, manufacturing, and delivering compliant CSUs to consumers. They asserted that changes to a large number of CSU models impacted by the requirements of the rule, along with a heavy industry reliance on ocean freight shippers facing significant constraints due to shortages, contribute to cumulative lead times that range from 3 months to a year or more to bring new models to the U.S. market. This includes time to redesign and test the CSU, and to order and receive component parts needed to manufacture it, as well manufacturing and shipping time for the CSU itself. Further, the record reflects that manufacturers commonly have substantial backlogs of orders, such that a 30-day effective date could make it impossible for retailers to fulfill orders that were placed prior to CPSC's adoption of the final rule.

The Small Business Administration's Office of Advocacy recommended extending the effective date beyond 30 days, to address supply chain issues and availability of CSUs at retail. Staff found these concerns to be credible because of the specific examples provided by commenters and because these comments comport to what staff has determined about the industry's supply chain, which impacts both domestic manufacturing and imports, as stated in the staff briefing package of the NPR.

Staff accordingly assesses that the 30-day effective date proposed in the NPR has the potential to be very disruptive for producers and consumers, including causing shortages for the U.S. consumers after cancellation of orders for CSUs that were placed by consumers and retailers

prior to the Commission's publication of the final rule. Further, postponing the effective date by several months would reduce the benefits of the rule by only a very small amount as most noncompliant CSUs will take years to cycle out of use. Therefore, staff recommends that the effective date for the final rule be 180 days (the upper limit of the range stated in CPSA section 9(g)(1)), instead of the date of manufacture or import as specified in the NPR.

Stockpiling Provision

The CPSA allows the Commission to prohibit manufacturers of a consumer product from stockpiling products subject to a consumer product safety rule in order to prevent manufacturers from circumventing the purpose of the rule. The statute defines "stockpiling" as manufacturing or importing a product between the date a rule is promulgated and its effective date at a rate that is significantly greater than the rate at which the product was produced or imported during a base period ending before the date the rule was promulgated. The Commission states what constitutes a "significantly greater" rate and the base period in the rule addressing stockpiling.

In the NPR briefing package, staff recommended including in the rule an anti-stockpiling provision to prohibit manufacturers and importers of CSUs from manufacturing or importing CSUs that do not comply with the requirements of the proposed rule in any 12-month period between the date a rule is promulgated and the effective date of the rule at a rate that is greater than 120 percent of the rate at which they manufactured or imported CSUs during the base period for the manufacturer. Staff recommended defining the base period as any period of 365 consecutive dates, chosen by the manufacturer or importer, in the 5-year period immediately preceding the promulgation of the final rule. In voting to issue the NPR, the Commission revised these provisions to propose to prohibit manufacturers and importers of CSUs from manufacturing or importing CSUs that do not comply with the requirements of the proposed rule in any 1-month period between the date a rule is promulgated and the effective date of the rule at a rate that is greater than 105 percent of the rate at which they manufactured or imported CSUs during the base period for the manufacturer. The proposed rule defined the base period as the calendar month with the median manufacturing or import volume within the last 13 months immediately preceding the month of promulgation of the final rule.

CPSC received several comments on the stockpiling provisions in the NPR. Primarily, consumer advocacy groups supported the provisions in the NPR, noting that the provisions in the NPR prevent the industry from significantly increasing production of non-compliant units because preventing such an increase is a consumer safety benefit. A commenter representing retailers stated that a base period of 5 years would be more appropriate because the most recent 13 months reflect current supply chain issues and are not representative.

Based on comments largely supporting the stockpiling limits in the NPR and the need for such provisions to allow manufacturers and the industry to meet existing or foreseeable increases in the demand for CSUs, without allowing large quantities of CSUs that do not meet the standard to be stockpiled, staff recommends retaining the stockpiling provisions from the NPR in the final rule. This stockpiling provision reflects a balance between the competing goals of addressing

the hazard but also considering the compliance cost and practicalities for businesses and potential impacts on consumers.

V. Economic Analysis

Final Regulatory Analysis (see Tab H)

Benefits and Costs

If the draft final rule was promulgated, the benefits of the draft final rule per CSU at a 3 percent discount rate are estimated at $15.95, as a result of reducing serious injuries and deaths of children and adults from CSU tip overs.

CPSC staff analyzed five CSU representative models to determine what types of modifications would allow those units to comply with the draft final rule and estimate the costs. If the five CSUs, for which compliance costs were estimated in this assessment, are a good representation of increased production cost for the industry, on average, the benefits of the draft rule generally meet or exceed the cost of making these CSU units compliant. The average incremental costs of modifying CSUs 3, 4, and 5 are $15.81, $10.39, and $10.21. All three would have compliance costs below the expected benefits of the draft final rule. For the other two representative models - CSUs 1 and 2 - the average incremental costs of compliance are $17.64 and $16.89. However, if manufacturers pursued a lowest-cost approach, all five representative models' benefits would exceed costs.

The sensitivity analysis indicates that if staff had used the lower cost modification assumptions, a higher child VSL, or considered consumer demand for safer CSUs leading to faster replacement of existing CSUs, the draft rule would have higher net benefits.

The estimates of costs and benefits in this final regulatory analysis have been revised to reflect more current and complete data than was used in the preliminary regulatory analysis prepared with the NPR. Much of this new data came from public comments, which are discussed in detail in Tab K. In addition, Tab K includes a summary of significant issued raised by comments regarding the preliminary regulatory analysis and an assessment of those comments.

The estimates discussed in the paragraphs above represent the average cost of proposed modifications for this specific group of five CSUs alone, under conservative assumptions (higher costs, lower benefits). Even though these may be representative of a set of CSUs in the market, CPSC staff note that these are only five CSU models out of the thousands of models available on the market for which the cost of modifications may differ. The cost of the modifications required to make other CSUs compliant will likely be higher for some models and lower for other models. However, CPSC staff assesses that the cost of the modifications

associated with these five CSUs are representative of the average cost of modifications industry will incur to achieve compliance with the draft final rule.[13]

Regulatory Alternatives

Staff considered several alternatives to the draft final rule. Five of the alternatives could be deemed less stringent than the draft final rule. These were (1) not taking any regulatory action, (2) mandating a hang tag providing a stability rating only with no minimum stability performance requirements, (3) mandating a requirement similar to the current voluntary standard but requiring a 60-pound test weight, and (4) mandating the ASTM standard currently in progress, and (5) extending the effective date of implementation beyond 180 days. Staff found that these alternatives would be less effective than the draft final rule. Staff does not recommend any of these alternatives because they would not likely reduce deaths and injuries from CSU tip overs to nearly the same extent as the draft final rule and would generate lower net benefits for society.

A more stringent alternative was considered, one that attempted to address incidents involving the forces generated by children weighing 60 pounds or less climbing the front of CSUs, as opposed to the 51.2 pounds or less that the draft rule attempts to address. Staff did not recommend this alternative because it would likely only increase the benefits slightly, while it might increase the costs of implementation disproportionately. Staff notes that 51.2 pounds is approximately the 95th percentile weight for 3-year-olds. Almost 94 percent of fatalities and about 66 percent of nonfatal injuries involving children and CSUs without televisions are to children 3 years of age or younger, and these are largely addressed by the draft final rule.

Summary of Public Comments

A Final Regulatory Analysis is required to have a summary of any significant issues raised by the comments submitted during the public comment period in response to the preliminary regulatory analysis, and a summary of CPSC's assessment of those issues. Tab K in the draft final rule briefing package summarizes the public comments that CPSC received on its NPR, including the preliminary regulatory analysis, and CPSC staff's assessment of those comments.

Final Regulatory Flexibility Analysis (see Tab I)

Before a final rule is issued, Section 604 of the Regulatory Flexibility Act (5 U.S.C. § 604) requires the Commission to prepare a Final Regulatory Flexibility Analysis (FRFA), describing

[13] The five representative models selected by CPSC engineering staff were involved in tip over incidents, which might indicate they were less stable than the average model before any of the modifications were implemented. Therefore, it is likely than the cost of the modifications required to make a majority of models in the market compliant—especially those not involved in any tip over incidents—would be lower than the cost of the modifications proposed for these five representative CSU models. Staff considers the estimated costs for these five models consistent with the conservative approach (higher costs, lower benefits) used by CPSC.

the impact of the rule on small entities and identifying efforts by the Commission to reduce those impacts. Tab I of the briefing package contains staff's discussion of the required components of the FRFA.

The results of this Final Regulatory Flexibility Analysis suggest that the draft final rule could have a significant adverse impact on some small manufacturers or importers of CSUs, at least during the 180 days when CSUs would need to be redesigned to meet the standard and tested to demonstrate compliance. The initial cost of compliance, including redesign and testing for compliance, could represent more than 1 percent of annual revenue (the typical threshold used to define a "significant" economic impact on small businesses) for some small manufacturers and importers, particularly manufacturers of low-volume units that could not spread the cost of redesign over thousands of units. The indirect impacts on small retailers are unlikely to exceed 1 percent of annual revenue. The initial and ongoing cost of testing to demonstrate compliance is less likely to be significant, except possibly for very small volume (less than 720 units per model) manufacturers. Possible alternatives to the draft final rule have been considered by staff and the Commission. All the less stringent alternatives could reduce the expected impact of the rule on small businesses; however, staff's assessment of these alternatives, with the exception of a longer effective date, finds that their adoption would not result in a rule that adequately addresses the risk of serious injury or death caused by CSU tip overs.

VI. Conclusion and Recommendations

Incident data suggest that children ages 1, 2, and 3 years old are the most at risk for death and severe injury from CSU tip overs. Staff's assessment of the CSU tip over hazard remains unchanged since the publication of the NPR. CPSC staff analysis identified the following factors as being present in many CSU tip-over incidents and as contributing to instability: child climbing, opening multiple extendable elements, filled extendable elements, and carpet, and that another important factor is considering multiple factors simultaneously. Staff's recommended rule accounts for those factors when assessing the stability of a CSU. CPSC staff assessed that improving the inherent stability of CSUs is an effective strategy for reducing deaths and injuries associated with CSU tip over. Technical analysis shows that CPSC staff's recommended requirements will reduce CSU deaths and injuries by reducing the occurrence of CSU tip overs.

Staff concludes that the current voluntary standards for CSU stability do not adequately reduce the risk of injury associated with tip overs because the performance requirements consider neither horizontal and dynamic forces from a child climbing or pulling on a CSU, nor additional factors such as filled extendable elements and carpet that negatively impact the stability of a CSU, and further because they fail to consider those factors simultaneously. Staff has identified fatal and nonfatal incidents with CSUs that meet the ASTM F2057 – 19 stability requirements.

CPSC staff recommends that the Commission publish a final rule for CSUs that includes specific requirements for stability, marking and labeling, and hang tag. These requirements are stated in the draft final rule. CPSC staff recommends that the Commission propose an effective

date of 180 days after publication of the final rule for manufacturers to comply with the stability requirements and include an anti-stockpiling provision. Finally, staff recommends publishing an NOR for children's product.

TAB A: Reported Clothing Storage Unit (CSU) Tip-Over-Related Fatalities, Nonfatal Incidents and Injuries, and ED-Treated Injuries

This page intentionally left blank.

United States
Consumer Product Safety Commission

Memorandum

TO: Kristen Talcott, Ph.D., Furniture Tip-Over Project Manager
Division of Human Factors, Directorate for Engineering Sciences

DATE: September 28, 2022

THROUGH: Stephen Hanway, Associate Executive Director
Directorate for Epidemiology

Risana Chowdhury, Division Director
Directorate for Epidemiology, Division of Hazard Analysis

FROM: Adam Suchy, Mathematical Statistician
Directorate for Epidemiology, Division of Hazard Analysis

SUBJECT: Reported Clothing Storage Unit (CSU) Tip-Over-Related Fatalities, Nonfatal Incidents and Injuries, and ED-Treated Injuries

---

Introduction

This memorandum provides CPSC staff's data on incidents associated with clothing storage unit (CSU) tip overs. Data include incidents reported in CPSC staff's notice of proposed rulemaking (NPR) briefing package, presented to the Commission in July 2021,[1] as well as information received after the timeframes searched for the NPR. In this memorandum, reference to data presented in the NPR includes both information that was provided in the published NPR and the more detailed information that was provided in staff's NPR briefing package.[2] This memorandum characterizes the number of reported fatalities, the number of reported nonfatal incidents and injuries, and the national injury estimates based on National Electronic Injury Surveillance System (NEISS) emergency department-treated (ED-treated) injury reports associated with instability or tip overs involving CSUs that were received by CPSC staff. For the reported fatalities and the injury estimates in this memorandum, the information presented is primarily based on CPSC's Directorate for Epidemiology, Division of Hazard Analysis (EPHA)

---

[1] The briefing package supporting the NPR on CSUs, published in July 2021, can be found at: Proposed Rule: Safety Standard for Clothing Storage Units (cpsc.gov).
[2] The NPR is available at: https://www.federalregister.gov/documents/2022/02/03/2022-01689/safety-standard-for-clothing-storage-units.

U.S. Consumer Product Safety Commission
4330 East–West Highway
Bethesda, MD 20814

National Product Testing & Evaluation Center
5 Research Place
Rockville, MD 20850

cpsc.gov

annual reports on furniture instability or tip overs[3] (annual reports); for the reported nonfatal incidents, staff extracted and analyzed additional data from the Consumer Product Safety Risk Management System (CPSRMS). For this memorandum, staff used the same product classification and criteria for inclusion as used in the NPR—see the NPR and supporting briefing package for a detailed discussion regarding data inclusion (*e.g.*, the products and incidents staff included and excluded). Although staff included incidents with victims of all ages for this analysis, most of the fatality and injury victims are children 17 years of age and younger—generally much younger.

In the analyses, staff also distinguishes between incidents that involved both a CSU and a television, and those that involved a CSU only. The reason for this distinction is that the presence of a television changes the mechanism of injury (see Tab B for additional explanation), and may influence the hazard pattern because of the presence of a second product. In addition, in recent years (from 2010 to 2019), there was a statistically significant linear decline in child injuries involving all CSUs (including televisions), but there was no linear trend detected in injuries to children involving CSU-only tip overs. The decrease in the number of CSU tip-over incidents to children appeared to be driven by a decline in tip overs involving televisions. Staff concluded that the marketplace change from heavier cathode ray tube (CRT) televisions to lighter, flat-screen models likely played a role in the observed decrease in CSU tip-over incidents with televisions.

Incident Data

Table 1 shows the different databases and corresponding time frames staff searched for the incident data in the NPR and in this memorandum. The data in the NPR included fatal and nonfatal incidents that occurred through December 31, 2020, and injuries treated in emergency departments through December 31, 2019. Any new reports of fatal and nonfatal incidents through April 30, 2022, and NEISS ED-treated injuries through December 31, 2021, have been added for this analysis. The reported incidents presented in this memorandum represent a minimum for the number of incidents or fatalities that have occurred during the given time frames.

[3] The 2021 and 2018 annual reports can be found at: 2021 Tip-Over Report (cpsc.gov) and 2018 Tip-Over Report (cpsc.gov). Staff relied primarily on the 2021 and 2018 annual reports, rather than the 2019 or 2020 reports, because the 2018 and 2021 reports covered the same years as the 2019 and 2020 reports, plus additional years. In addition, CSU tip-over fatalities occurring between 1/1/2021 and 4/30/2022 (since the NPR), and NEISS CSU tip-over cases occurring in the calendar years 2020 and 2021 (since the NPR) are also included in counts in this memorandum.

Table 1. Databases and Corresponding Time Frames Included[4]

	Draft NPR Staff Briefing Package		Draft FR Staff Briefing Package (this Memorandum)		
Data Components	Start Date	End Date	Start Date	End Date	Database(s) Searched
Reported Fatalities	January 1, 2000	December 31, 2020	January 1, 2000	April 30, 2022	CPSRMS and NEISS
Reported Nonfatal Incidents and Injuries	January 1, 2005	December 31, 2020	January 1, 2005	April 30, 2022	CPSRMS
NEISS ED-Treated Injuries	January 1, 2006	December 31, 2019	January 1, 2006	December 31, 2021	NEISS

Source: CPSRMS and NEISS databases.
Reporting is ongoing for CPSRMS; the years 2020–2022 are considered incomplete.

Reported Fatalities and NEISS ED-Treated Injuries

EPHA staff publishes annual reports on furniture instability or tip overs. These reports are based on data from CPSRMS and NEISS.

For the NPR, staff used the CSU fatalities in the 2020 annual report,[5] and any additional deaths that were reported to CPSC by December 31, 2020. For this draft final rule analysis, staff searched for any additional fatalities that were reported to CPSC by April 30, 2022.[6] The fatalities reported in this memorandum are a combination of data presented in the NPR and the new search.

For the NPR, the NEISS ED-treated injury reports included those from the 2020 annual report (for injuries between January 1, 2010 and December 31, 2019), as well as those from the 2018 annual report (for injuries between January 1, 2006 and December 31, 2009). For this draft final rule analysis, staff added newly available NEISS injury reports between January 1, 2020 and December 31, 2021. The NEISS injuries reported in this memorandum are a combination of data presented in the NPR and the new search.

While the data from CPSRMS are anecdotal and the data from NEISS are probability sample-based, specifically used for the purpose of generating national estimates and trends, the two databases are not necessarily mutually exclusive. Among other features, CPSRMS houses all

[4] Deaths and nonfatal incident reports submitted to CPSC come from reports entered into CPSC's CPSRMS and NEISS databases no later than 4/30/2022.
[5] The 2020 annual report can be found at: 2020 Tip-Over Report (cpsc.gov).
[6] There have been six deaths reported to CPSC since the NPR, between January 1, 2021 and April 30, 2022.

in-depth investigation reports of the anecdotal[7] reports that CPSC receives, as well as the follow-up investigations of select NEISS injuries. As such, it is possible for a NEISS injury case to be included in the national injury estimate, while its investigation report is counted among the anecdotal nonfatal incidents. There are 325 such injury cases presented in this memorandum, of which 12 of these cases have been reported since the NPR.[8] Additionally, there were five NEISS injury victims who died while receiving treatment between January 1, 2006 and December 31, 2021. These five deaths all occurred before January 1, 2020 and were all presented in the fatality section of the NPR. One of these five deaths was mistakenly left out of the NEISS injury estimate section of the NPR, while the other four deaths were counted among the NEISS injury estimates. All five of these deaths appear in the fatality section and the NEISS injury estimate section of this memorandum. In the NPR, and in this memorandum, there were three additional NEISS injury victims who died while receiving treatment between January 1, 2000 and December 31, 2005, and these three deaths only appear in the fatality section.

Reported Nonfatal Incidents

For the NPR, staff extracted data for five CSU-related product codes from CPSRMS,[9] and retained data that indicated a tip-over or instability incident had occurred, and the involved product met the criteria for a CSU. The timeframe was limited to January 1, 2005 through December 31, 2020. For this draft final rule, staff added any additional in-scope incidents that were reported to CPSC by April 30, 2022. As with the fatality reports, the nonfatal reports from the CPSRMS are also anecdotal in nature and provide a minimum count for the number of nonfatal incidents that occurred.

Some incidents reported a CSU tipping over, with no specific mention of a victim being injured during the incident. Other incidents reported injuries to more than one person during a single incident. For example, a tip-over incident that results in injuries to two people is counted as one tip-over incident in the incident analysis, but it is counted as two injuries in the injury analysis of the reported nonfatal incident section.

---

[7] CPSC staff considers CSPRMS reports to be anecdotal because, unlike NEISS data, they cannot be used to identify statistical estimates or year-to-year trend analysis, and because incident reports CPSC receives in CPSRMS can range in hazard severity, including incidents with only the potential to cause injury. Although these anecdotal data do not provide for statistical analyses, they often provide rich data with important information to identify hazard patterns, as well as provide a minimum count of certain injuries and deaths.

[8] Among the 325 NEISS investigations in this memorandum, 312 involved a television and 13 involved a CSU only. Of the 12 NEISS investigations received since the NPR, 10 involved a CSU only, and two involved a television as well.

[9] Staff extracted and reviewed for inclusion, all data coded under these five product codes: 604 (Desks, dressers, chests, bureaus, or buffets), 4013 (Other furniture), 4014 (Furniture, not specified), 4056 (Cabinets, racks, room dividers and shelves, not elsewhere classified), and 4057 (Tables, not elsewhere classified (excl. baby changing tables, billiard or pool tables and television tables or stands)).

Changes in Data that Appeared in the NPR

It is important to note that data collection is ongoing for CPSRMS, so CPSC may receive additional reports in the future for the period covered in this memorandum.[10] Additionally, as an incident is investigated and new information becomes available, or as other associated reports come in, the initial information is either corroborated or contradicted. If new information contradicts initial information, this may cause the reports of the fatalities and numbers of nonfatal incidents to change. After careful consideration of scope criteria, some incidents that were reported in the NPR were re-evaluated to ensure that the criteria for inclusion were applied consistently. Data presented in the NPR that have been changed or excluded in this memorandum are listed below:

- One fatality of a child reported in the NEISS was included in the death counts in the NPR but was mistakenly left out of the NEISS cases in the NPR and has since been added to the NEISS cases in this memorandum.
- One nonfatal injury that was categorized as involving a "television and chest, bureau, or dresser" in the NPR has been excluded, because after further review, there was no indication that the dresser tipped over.
- One nonfatal injury categorized as involving a "chest, bureau, or dresser" in the NPR has been excluded, given the incident was found to have occurred outside of the United States.
- Six nonfatal incidents, which resulted in three injuries, and that were categorized as involving a "chest, bureau, or dresser" in the NPR, have been reclassified as involving a "television and chest, bureau, or dresser," after further review of these incidents.
- Based on information from investigation documents received since the NPR data were published:
    - Three incidents reported with no injuries and unknown age and sex in the NPR, now have known ages and sexes, and are categorized as having one injury in each case, with the level of care not known.
    - One incident reported in the NPR as involving only a chest, bureau, or dresser falling, now also includes a television falling.

[10] For reported deaths, data from 3 or more years ago are generally considered complete. As of the data-extraction date for this memorandum (05/01/2022), reported deaths from years 2019 and earlier are considered complete, and for years 2020 through 2022, reporting is considered ongoing, and new deaths may be reported to have occurred during these years in the coming few years.

Results

Reported Fatalities[11]

In the NPR, CPSC staff reported that they were aware of 193 reported CSU tip-over or instability fatalities involving children ages 17 years old and younger, 11 reported fatalities to adults ages 18 through 64 years, and 22 reported fatalities to seniors ages 65 years and older that were reported to have occurred between January 1, 2000 and December 31, 2020.[12] Among newly reported fatalities received between January 1, 2021 and April 30, 2022, there were six reported CSU tip-over or instability fatalities to children ages 17 years and younger, and two deaths to seniors 65 years and older.

Of the 199 CSU tip-over fatalities to children reported to have occurred between January 1, 2000 and April 30, 2022, 95 (48 percent) did not involve a television; and of the 35 reported adult and senior fatalities, 34 (97 percent) did not involve a television. Of the 199 reported child fatalities, 196 (98 percent) involved a chest, bureau, or dresser; and of the 35 adult and senior fatalities, 31 (89 percent) involved a chest, bureau, or dresser. Table 2 summarizes the number of reported CSU tip-over and instability fatalities by age group, CSU furniture type, and television involvement.

Table 2 includes the eight deaths—six children and two seniors—(in parentheses) reported since the NPR; all eight involved only a chest, bureau, or dresser falling, with no mention of a television involved.

[11] Fatalities represents the number of deaths from CSU instability or tip over incidents. Of the 234 reported fatalities, there was one tip-over incident that resulted in two deaths; the number of fatal incidents is 233.

[12] Consistent with common practice, adults ages 65 years and older are considered seniors for this memorandum. In the annual reports, “adults” are defined as being between 18 and 59 years old, and “seniors” are defined as being 60 years and older. There were four reported CSU tip-over and instability deaths to victims between ages 60 and 64 years old; so those four deaths are classified as seniors in the annual reports, but classified as adults in this memorandum.

Table 2. CSU Instability or Tip-Over Fatalities Reported by Age Group, CSU Furniture Type, and Television Involvement: January 1, 2000–April 30, 2022

Product(s) Involved	Number of Reported Fatalities (Column %) (Fatalities Reported since the NPR)			
	Children (0 to 17 years)	Adults (18 through 64 years)	Seniors (65 years and older)	All Ages
Only Furniture Fell	**95 (48%) (6)**	**10 (91%) (0)**	**24 (100%) (2)**	**129 (55%) (8)**
Chest, Bureau, or Dresser	*93 (47%) (6)*	*9 (82%) (0)*	*21 (88%) (2)*	*123 (53%) (8)*
Wardrobe	*2 (1%) (0)*	*1 (9%) (0)*	*1 (4%) (0)*	*4 (2%) (0)*
Armoire	–	–	*1 (4%) (0)*	*1 (<1%) (0)*
Portable Storage Closet	–	–	*1 (4%) (0)*	*1 (<1%) (0)*
Clothes Locker	–	–	–	–
Television Also Fell	**104 (52%) (0)**	**1 (9%) (0)**	**–**	**105 (45%) (0)**
Chest, Bureau, or Dresser/Television	*103 (52%) (0)*	*1 (9%) (0)*	–	*104 (44%) (0)*
Armoire/Television	*1 (1%) (0)*	–	–	*1 (<1%) (0)*
Total Reported Fatalities	**199 (100%) (6)**	**11 (100%) (0)**	**24 (100%) (2)**	**234 (100%) (8)**

Source: CPSRMS and NEISS databases.
Reporting is ongoing for CPSRMS; the years 2020–2022 are considered incomplete.

Figure 1 shows the number of reported CSU tip-over and instability fatalities, by year and by type of furniture and television involvement, to adults and seniors, and to children.[13] As staff reported in the NPR, when considering fatalities by year, other than 2010, there were at least three reported CSU tip-over fatalities to children without a television involved, each year, for the years 2001–2017. In 2018, there was one CSU tip-over fatality to a child without a television involved; and in 2019, there were two fatalities to children without a television involved. Although reporting is considered incomplete for 2020 and later years, CPSC staff is already aware of one CSU tip-over fatality with no television involved to a child in 2020, and five child fatalities with no television involved in 2021. Similarly, between 2000 and 2019, there has been at least one CSU tip-over death to an adult or a senior in each year, without a television involved, with the exception of 2006 and 2018.

All eight deaths reported since the NPR involved only a chest, bureau, or dresser falling, with no mention of a television involved. Six of the eight decedents were children (one died in 2020 and five in 2021); and two of the eight decedents were seniors (one died in 2019 and one in 2022).

[13] Figure 1 displays the combined incidents per year for adults/seniors, rather than showing separate adult/senior incidents by television involvement, because only one adult/senior fatality involved a television during the time frame shown (see Table 2). The television-related adult/senior death occurred in 2017.

Figure 1. CSU instability or tip-over fatalities reported by year, age group, and television involvement: January 1, 2000–April 30, 2022.

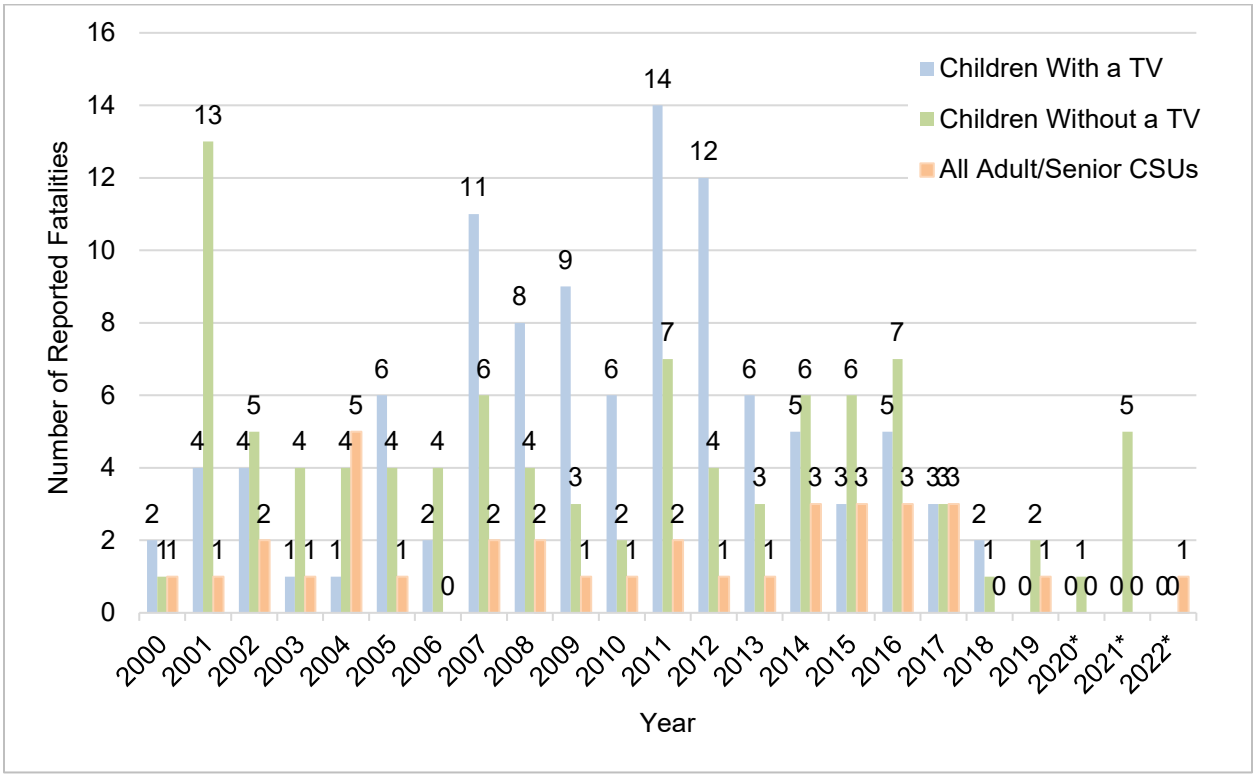

Source: CPSRMS and NEISS databases.
Asterisks (*) indicate that reporting is ongoing for CPSRMS; the years 2020–2022 are considered incomplete.

As reported in the NPR, the majority of the reported instability or tip-over fatalities involving a CSU happen to children. Table 3 presents the number of reported CSU tip-over and instability fatalities to children by age and television involvement, and the cumulative percent of child fatalities of a certain age or younger for the respective groups. As also reported in the NPR, regardless of television involvement, the most reported CSU tip-over fatalities happen among children ages 1 and 2 years old, followed by 3-year-olds. Among the 95 child fatalities involving CSUs without a television, 91 percent (86 out of 95 children) happened to children between 1 and 3 years old, which is the same percent reported in the NPR (81 out of 89 children). Among children ages 4 years and older, a television was more frequently involved than not involved.

Table 3 below includes in parentheses the six deaths to children reported since the NPR, all involving only a chest, bureau, or dresser falling, with no mention of a television involved. Of the six decedents, three were 1-year-old children; one was a 2-year-old; one was a 3-year-old; and one was a 7-year-old.

Table 3. Children (Under 18 Years) CSU Instability or Tip-Over Fatalities Reported by Age and Television Involvement: January 1, 2000–April 30, 2022

Age (in years)	Number of Reported Child Fatalities (Number of Fatalities Reported since the NPR)			
	Involving Only a CSU	Cumulative % (Up to and Including this Age) Involving Only a CSU	Involving a CSU and a Television	Cumulative % (Up to and Including this Age) Involving a CSU and a Television
0	3	3%	4	4%
1	33 (3)	38%	28	31%
2	31 (1)	71%	32	62%
3	22 (1)	94%	18	79%
4	2	96%	10	88%
5	1	97%	6	94%
6	1	98%	3	97%
7	2 (1)	100%	0	97%
8	0	100%	3	100%
>=9	0	100%	0	100%
Total Reported Fatalities	**95 (6)**		**104 (0)**	

Source: CPSRMS and NEISS databases.
Reporting is ongoing for CPSRMS; the years 2020–2022 are considered incomplete.

Figure 2 presents the number of reported CSU tip-over and instability fatalities to children, along with the area of the body most likely impacted and resulted in fatal injuries, and whether a television was involved. Reported CSU tip-over fatalities to children not involving a television were much more likely to lead to fatal torso injuries; whereas fatalities to children involving a television were much more likely to cause head injuries resulting in death. Similar to what was reported in the NPR, the combined data show that 63 percent (60 out of 95 deaths) of reported fatalities to children that did not involve a television resulted in torso injuries; only 6 percent (6 out of 104 deaths) of reported CSU tip-over fatalities to children involving a television arose from torso injuries only. Eighty-eight percent (91 out of 104 deaths) of reported CSU tip-over fatalities to children involving a television resulted solely from injuries to the head; only 13 percent (12 out of 95 deaths) of reported fatalities to children not involving a television resulted solely from injuries to the head.

Figure 2 includes the six deaths to children reported since the NPR, all involving only a chest, bureau, or dresser falling, with no mention of a television involved. Among these six deaths, two were due solely to torso injuries; one was due solely to head and torso injuries; one was due to head, torso, and limb injuries; and two were due to injuries to unknown body parts.

Figure 2. Children CSU instability or tip-over fatalities reported by primary body area injured and television involvement: January 1, 2000–April 30, 2022.

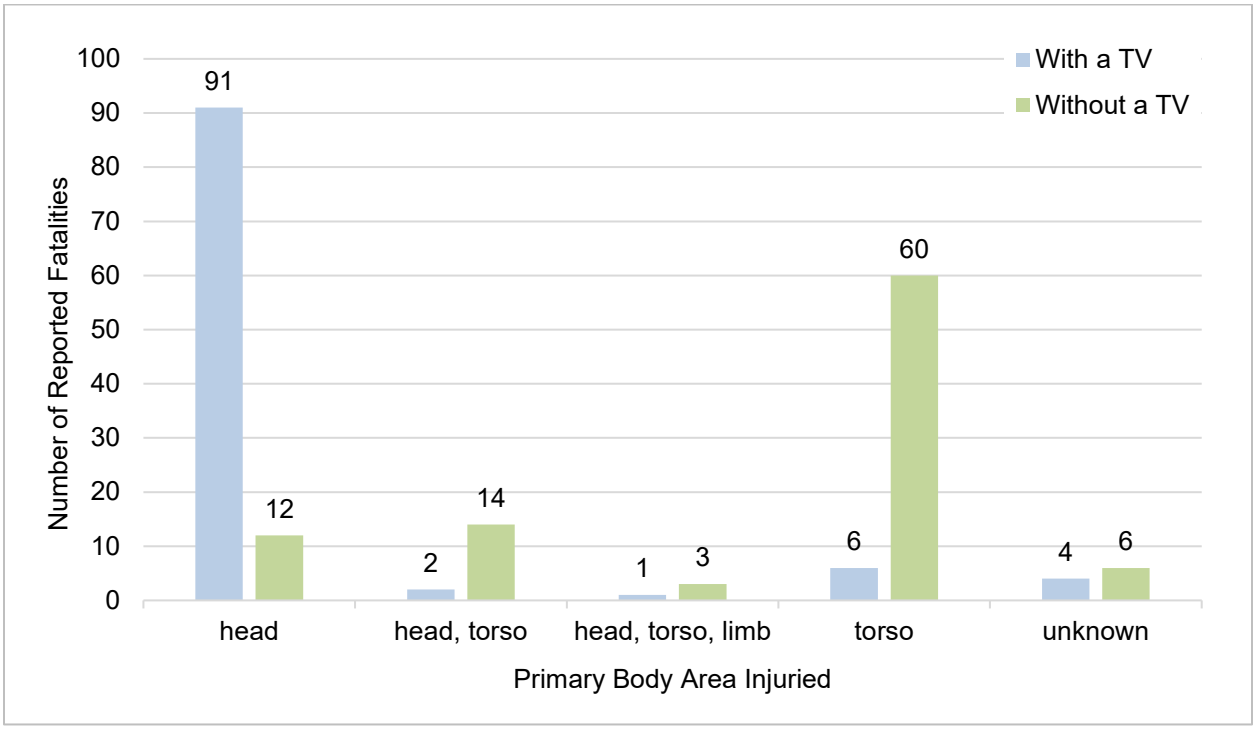

Source: CPSRMS and NEISS databases.
Reporting is ongoing for CPSRMS; the years 2020–2022 are considered incomplete.

Reported Nonfatal Incidents

In the NPR published in July 2021, CPSC staff identified 1,002 reported nonfatal CSU tip-over and instability incidents (for all ages[14]) that were reported to have occurred between January 1, 2005 and December 31, 2020. Among the 1,002 nonfatal incidents reported, there were 652 injuries reported in the NPR.

Since the NPR, two out of the 1,002 nonfatal reported incidents, each involving one injury, have been excluded from the data set in this memorandum[15]; based on information from investigation

[14] No victim age breakdown was done for nonfatal incidents because many of these incidents involved no injury to any victim.
[15] Of the two nonfatal cases excluded since the NPR, staff determined in one case that only a television fell, without any mention of the dresser being unstable or tipping; in the other case, staff determined that the incident occurred in a foreign nation. In one of these two incidents, the source of the report was a NEISS investigation. Since this NEISS incident occurred in 2020, and the NEISS data reported in the NPR briefing package covered the years 2006 through 2019, the corresponding NEISS incident was not included in the NPR.

documents received since the NPR, four incidents had various data component changes[16]; and after further review of these incidents, six incidents, previously classified in the NPR as involving only a chest, bureau, or dresser falling, were reclassified to include a television falling. All these changes will affect comparisons in Tables 4 through 7 of this memorandum with those same tables that appeared in the NPR.

Since the NPR, CPSC has received an additional 154 reports of nonfatal CSU tip-over and instability incidents (for all ages) (145 CSU-only and nine involve a television), reporting 90 injuries (83 injuries involving a CSU-only, and seven involving a television). Therefore, between January 1, 2005 and April 30, 2022, there have been 1,154 reported nonfatal CSU tip-over and instability incidents, with 743 reported injuries.

Table 4 summarizes the reported nonfatal CSU tip-over incidents by CSU furniture type, television involvement, and whether the incident was an investigation initiated from a NEISS case, or an incident reported through other data sources in the CPSRMS. Of the 1,154 reported nonfatal CSU tip-over incidents, 67 percent (776 incidents) did not involve a television, and 99.5 percent (1,148 incidents) involved a chest, bureau, or dresser; in the NPR, 64 percent of nonfatal incidents did not involve a television, and 99.5 percent involved a chest, bureau, or dresser.

Table 4 below includes in parentheses the 154 nonfatal incidents reported since the NPR, 144 involving only a chest, bureau, or dresser with no television involvement; nine involving both a television and a chest, bureau, or dresser; and one involving an armoire. Since the NPR, seven non-NEISS data source incidents that were classified as only a chest, bureau, or dresser falling in the NPR, now also report an incident involving a television falling; and two non-NEISS data source incidents that were reported in the NPR have been excluded (one chest, bureau, or dresser and one television and chest, bureau, or dresser). See Table 4.

[16] Among these four cases, one reported in the NPR involved an incident resulting in an injury involving a chest, bureau, or dresser falling; in this memorandum, the incident reported also involved a television falling. In the other three cases, ages and sex were reported as unknown, and no injury was reported in the NPR; now the age and sex are known, and now the injury status is reported as an injury with the level of care not known for these three cases.

Table 4. Reported Nonfatal CSU Instability or Tip-Over Incidents for All Ages by Data Source, CSU Furniture Type, and Television Involvement: January 1, 2005–April 30, 2022

	Number of Reported Nonfatal Incidents (Column %) (Number of Nonfatal Incidents Reported since the NPR)		
Product(s) Involved	**NEISS Investigated Incidents[17]**	**All Other Reports**	**All Reported Nonfatal Incidents**
Only Furniture Fell	**13 (4%) (10)**	**763 (91%) (135)**	**776 (67%) (145)**
Chest, Bureau, or Dresser (*CBD)*	*13 (4%) (10)*	*757 (91%) (134)*	*770 (67%) (144)*
Armoire	–	*5 (1%) (1)*	*5 (<1%) (1)*
Wardrobe	–	*1 (<1%) (0)*	*1 (<1%) (0)*
Clothes Locker	–	–	–
Portable Storage Closet	–	–	–
Television Also Fell	**307 (96%) (2)**	**71 (9%) (7)**	**378 (33%) (9)**
Chest, Bureau, or Dresser (*CBD)/Television*	*307 (96%) (2)*	*71 (9%) (7)*	*378 (33%) (9)*
Total Reported Nonfatal Incidents	**320 (100%) (12)**	**834 (100%) (142)**	**1,154 (100%) (154)**

Source: CPSRMS database.
Reporting is ongoing for CPSRMS; the years 2020–2022 are considered incomplete.

Table 5 presents the number of reported nonfatal CSU tip-over and instability incidents by year and television involvement. CPSC staff received more reports of nonfatal incidents between 2016 and 2018, than in earlier or later years, perhaps due to increased public awareness from publication of recall notices. It is also possible that the CPSC "Anchor It!" campaign had some effect on this increase, since the education campaign began shortly before the increase, in early 2015. Among the 406 reported nonfatal CSU tip-over and instability incidents with no television involved that occurred between 2016 and 2018, 83 percent (336 reports) were reported solely by manufacturers or retailers.

Table 5 includes in parentheses the 154 nonfatal incidents reported since the NPR, of which 145 involved only a CSU falling; and nine involved both a CSU and a television falling. Since the NPR, seven incidents that were classified in the NPR as involving only a CSU falling now also include a television falling (one occurred in 2006; two in 2009; two in 2018; one in 2019;

[17] In 2009, as part of a special study, staff began conducting NEISS investigations of tip-over incidents involving young children and televisions. The purpose of the special study was to determine whether the incidents involved flat-screen or CRT televisions, and to learn from the details of incident scenarios. The study was expanded in 2020, to include NEISS investigations of CSU tip-over incidents to young children not involving televisions. This is why the vast majority of NEISS investigations include the involvement of a television.

and one in 2020),[18] and two incidents have been excluded (one CSU-only in 2018, and one television and CSU in 2020). See Table 5.

Table 5. Reported Nonfatal CSU Instability or Tip-Over Incidents for All Ages by Year and Television Involvement: January 1, 2005–April 30, 2022

Year	Number of Reported Nonfatal Incidents (Number of Nonfatal Incidents Reported since the NPR)		
	Involving Only a CSU	Involving a CSU and a Television	All Reported Nonfatal Incidents
2005	12	0	12
2006	6	2	8
2007	5	1	6
2008	7	2	9
2009	9	46	55
2010	19	55	74
2011	22	48	70
2012	29	58	87
2013	31	47	78
2014	40 (1)	30	70 (1)
2015	41 (1)	26	67 (1)
2016	236 (4)	24	260 (4)
2017	89 (2)	14	103 (2)
2018	81 (23)	11 (2)	92 (25)
2019	58 (37)	5	63 (37)
2020*	54 (40)	7 (5)	61 (45)
2021*	34 (34)	1 (1)	35 (35)
2022*	3 (3)	1 (1)	4 (4)
Total Reported Nonfatal Incidents	**776 (145)**	**378 (9)**	**1,154 (154)**

Source: CPSRMS database.
Asterisks (*) indicate reporting is ongoing for CPSRMS; the years 2020–2022 are considered incomplete.

[18] In one of these incidents, we received an additional document, prompting the change to report the involvement of a television, as well; and in the other six incidents, after further review of these incidents, we discovered a television was also involved.

Of the 1,154 nonfatal CSU tip-over and instability incidents reported, 423 incidents did not mention any specific injuries; 719 incidents reported one injury; and 12 incidents reported two injuries, resulting in a total of 743 injuries reported among all of the reported nonfatal incidents.

Table 6 presents the severity of the reported nonfatal CSU tip-over and instability injuries in these categories: NEISS-investigated injuries with and without televisions involved[19]; non-NEISS data sources involving only a CSU; and non-NEISS data sources also involving a television tipping over. Excluding the 325 investigated NEISS injuries, between January 1, 2005 and April 30, 2022, there were 361 reported injuries resulting from a CSU tipping over, with no television involved; and there were 57 reported injuries resulting from a CSU *and* a television tipping over. Among the 57 non-NEISS CSU tip-over injuries involving a television, 54 resulted in injuries to children, and three resulted in injuries to adults 18 years and older. Among those three injuries to adults, one required hospitalization, one resulted in an injury with the level of care not known, and one was seen by a medical professional.

Table 6 presents the 743 reported nonfatal injuries, of which, in parentheses, 90 (83 CSU-only and seven also involving a television) were reported since the NPR. Since the NPR, staff received additional documents from data sources other than NEISS investigations that included supplemental details about some incidents; this required changes in injury status for three incidents in this memorandum compared to what was reported in the NPR. The three incidents, involving a CSU only, were reported in the NPR as having no injury. These three incidents, based on the post-NPR data, have been changed to report an injury, with the level of care listed as not known. In addition, two non-NEISS data source incidents that were reported in the NPR have been excluded (one CSU-only injury seen by a medical professional, and one television and CSU ED-treated injury).

[19] Of the 325 NEISS-investigated, ED-treated injuries, 13 incidents did not involve a television. Among those 13 injuries, 10 were to children 3-years-old and younger; two were between 4 and 5 years old; and one was to a child older than 5 years-old. Twelve out of these 13 children were ED-treated, and one child 3-years-old and younger was hospitalized. The incidents not involving televisions can be seen among incident counts in Table 7.

Table 6. Reported Nonfatal CSU Instability or Tip-Over Injuries for All Ages by Data Source, Injury Severity, and Television Involvement: January 1, 2005–April 30, 2022

	Number of Reported Nonfatal Injuries (Column %) (Number of Nonfatal Incidents Reported since the NPR)			
Injury Severity	**All NEISS Investigations with and without Televisions Involved**	**Non-NEISS Involving Only a CSU**	**Non-NEISS Involving a CSU and a Television**	**All Reported Nonfatal Injuries**
Hospital Admission	40 (12%) (1)	8 (2%) (2)	19 (34%) (0)	67 (9%) (3)
Emergency Department Treatment Received	282 (87%) (11)	31 (9%) (11)	5 (9%) (1)	318 (43%) (23)
Seen by Medical Professional	(0)	34 (9%) (8)	2 (4%) (1)	36 (5%) (9)
Injury, Level of care not known[20]	3 (1%) (0)	288 (80%) (52)	31 (54%) (3)	322 (43%) (55)
Total Reported Nonfatal Injuries	**325 (100%) (12)**	**361 (100%) (73)**	**57 (100%) (5)**	**743 (100%) (90)**

Source: CPSRMS database.
Reporting is ongoing for CPSRMS; the years 2020–2022 are considered incomplete.

Table 7 presents the 374 reports of nonfatal CSU tip-over or instability injuries with no television involved, 13 from NEISS investigations, and 361 from other data sources. The incidents are listed according to injury severity for all ages, with age group breakdowns, as follows: 3 years and younger, 4 to 5 years, 6 to 17 years, children with an unknown age, victims with an unknown age, and adults ages 18 years and older. Excluding the 105 injuries to victims in the unknown age category, of the 269 remaining reported injuries involving only a CSU, where the age group of the victim is known, 228 injuries (85 percent) are known to be children; the NPR reported 85 percent of injuries to people with a known age were known to be children. Of the victims with known ages, there were more injuries suffered by children 3 years old and younger, than by older victims; and the injuries suffered by some of these young children were more severe, compared to older children and adults/seniors.

Table 7 presents the 374 reported nonfatal injuries, of which, in parentheses, 83 were reported since the NPR. Based on information from additional documents received since the NPR data published, three incidents reported in the NPR as having no injury, have been changed to report having an injury, with the level of care not known (one age 3 years and younger, one age 4-5

[20] For non-NEISS data sources, injuries classified as *Injury, level of care not known* include bruising, bumps on the head, cuts, lacerations, scratches, application of first-aid, or other indications of at least a minor injury that occurred, without any mention of aid rendered by a medical professional. There were three NEISS cases in which the victim was taken to the emergency department, but then left without being seen.

years old, and one 6 years and older) in Table 7. Four injuries reported in Table 7 in the NPR have been reclassified for this memorandum as also involving a television, and the four injuries no longer appear in Table 7 (two children, 6 years and older, reporting injuries with the level of care not known; one child 3 years and younger, reporting injury with the level of care not known; and one 4-5-year-old ED-treated injury). One incident reported in the NPR, concerning a child under 3 years old seen by a medical professional, has been excluded in Table 7, because after further review, it was discovered that the incident occurred outside the United States or its territories.

Table 7. Reported Nonfatal CSU-Only Instability or Tip-Over Injuries by Age Group and Injury Severity: January 1, 2005–April 30, 2022

	Number of Reported Nonfatal Injuries (Number of Nonfatal Incidents Reported since the NPR)						
Injury Severity	**3 Years Old and Younger[21]**	**4-5 Years Old**	**6-17 Years Old**	**Children w/ an Unknown Age[22]**	**Unknown Age**	**Adults[23]**	**ALL AGES**
Hospital Admission	8 (3)	0 (0)	0 (0)	1 (0)	0 (0)	0 (0)	9 (3)
Emergency Department Treatment Received	17 (9)	5 (2)	6 (2)	11 (5)	1 (0)	3 (2)	43 (20)
Seen by Medical Professional	8 (2)	5 (1)	6 (2)	6 (2)	7 (1)	2 (0)	34 (8)
Injury, Level of care not known	66 (15)	27 (2)	24 (3)	38 (15)	97 (8)	36 (9)	288 (52)
Total Reported Nonfatal Injuries	**99 (29)**	**37 (5)**	**36 (7)**	**56 (22)**	**105 (9)**	**41 (11)**	**374 (83)**

Source: CPSRMS database.
Reporting is ongoing for CPSRMS; the years 2020–2022 are considered incomplete.

[21] There was one child who was hospitalized and referred to as a "toddler," so this injury has been categorized in the "3 years and younger" age group.
[22] Of the children whose ages were unknown, staff categorized them as children because the victim was known to be a sibling of a small child or referred to as a "child," "daughter," or "son." There are four children whose ages are unknown, each with an injury, and with a level of care not known; they are known to be either 3 or 4 years old.
[23] In reports with no age reported for the injured person, if the respondent was the injured victim, then staff assumed that the victim was an adult, 18 years or older, and these injuries can be found in the "Adults" category. Note that Table 7 in the NPR showed, in error, one hospitalization and zero ED-treated adults with no television involved; the table should have shown zero hospitalizations and one ED-treated adult, as reflected in the table in this memorandum.

ED-Treated National Injury Estimates[24]

According to the NEISS, there were an estimated total of 84,100 injuries (sample size = 2,869, coefficient of variation = .0638), an annual average of 5,300 estimated injuries, related to CSU instability or tip-over incidents, with and without a television also falling, for all ages that were treated in U.S. hospital EDs from January 1, 2006 to December 31, 2021. Of the 84,100 CSU instability or tip-over ED-treated injuries, 67,300 (80 percent) involved only a CSU tipping over, and 16,800 (20 percent) also involved a television falling. Of the estimated 84,100 CSU instability or tip-over ED-treated injuries, 60,100 (72 percent of all ages) were to children, which is an annual average of 3,800 estimated injuries to children over the 16-year period. Of all CSU instability or tip-over ED-treated injuries to all ages, 92 percent of patients were treated and released, and 4 percent were hospitalized. Among children only, 93 percent were treated and released, while 3 percent were hospitalized.[25]

Table 8 below summarizes the estimated number of CSU instability or tip-over ED-treated injuries to children ages 17 years and younger, and to adults ages 18 years and older, by CSU furniture type, and television involvement. Of the estimated number of CSU instability or tip-over, ED-treated injuries sustained by all ages, 98 percent of the CSUs were a chest, bureau, or dresser, and 80 percent of all injuries did not involve a television; in the NPR, for all ages, 98 percent of the CSUs were a chest, bureau, or dresser, and 79 percent of all injuries did not involve a television. Of the estimated number of CSU instability or tip-over, ED-treated injuries to children, 73 percent did not involve a television, and 97 percent of injuries to adults ages 18 years and older did not involve a television; in the NPR, 72 percent of injuries involving children did not involve a television, and 96 percent of injuries to adults ages 18 years and older did not involve a television.

[24] The estimates are rounded to the nearest hundred. Estimates may not sum to total, due to rounding; and asterisks (*) indicate that data were insufficient to support reliable statistical estimates. NEISS estimates are reportable, provided the sample count is 20 or greater, the national estimate is 1,200 or greater, and the coefficient of variation (CV) is 0.33 or less.
[25] The remaining ED-treated injuries that were not treated and released or hospitalized include: treated and transferred, observed, left without receiving treatment, dead on arrival, or not specified.

Table 8. Estimated Number of CSU Instability or Tip-Over ED-Treated Injuries by Age Group, CSU Furniture Type, and Television Involvement: January 1, 2006–December 31, 2021

Product(s) Involved	Estimated Number of ED-Treated Injuries (Column %)		
	Children	Adults[26]	All Ages
Only Furniture Fell	**44,100 (73%)**	**23,200 (97%)**	**67,300 (80%)**
Chest, Bureau, or Dresser	*43,500 (72%)*	*22,400 (93%)*	*65,900 (78%)*
Armoire	*	*	*
Armoire or Dresser (unknown which)	*	*	*
Portable Closet/Large Clothes Locker	*	*	*
Wardrobe	*	*	*
Television Also Fell	**16,000 (27%)**	*	**16,800 (20%)**
Chest, Bureau, or Dresser/Television	*16,000 (27%)*	*	*16,700 (20%)*
Armoire/Television	*	*	*
Total Estimated Number of Injuries	**60,100 (100%)**	**24,000 (100%)**	**84,100 (100%)**

Source: NEISS database.
Data that were insufficient to support reliable statistical estimates are presented as "".*
Estimates are rounded to the nearest hundred and may not add up to the total, due to rounding.

Figure 3 presents the estimated number of CSU instability or tip-over ED-treated injuries by age group and year, and the table includes all incidents with and without a television involved. The estimated number of CSU tip-over, ED-treated injuries to children ranges from about 1,800 to 5,900 for each year from 2006 to 2021. The estimated number of CSU tip-over, ED-treated injuries to adults ages 18 years and older is fairly consistent over most of the 16-year period, with an overall yearly average of 1,500 injuries; in the NPR, there were a reported annual average 1,600 injuries over the years 2006 through 2019.

[26] Of the 24,000 estimated number of ED-treated, CSU tip-over injuries to adults, about 3,800 (16 percent) injuries were to seniors ages 65 years and older.

Figure 3. Estimated number of CSU instability or tip-over ed-treated injuries by age group and year: January 1, 2006–December 31, 2021.

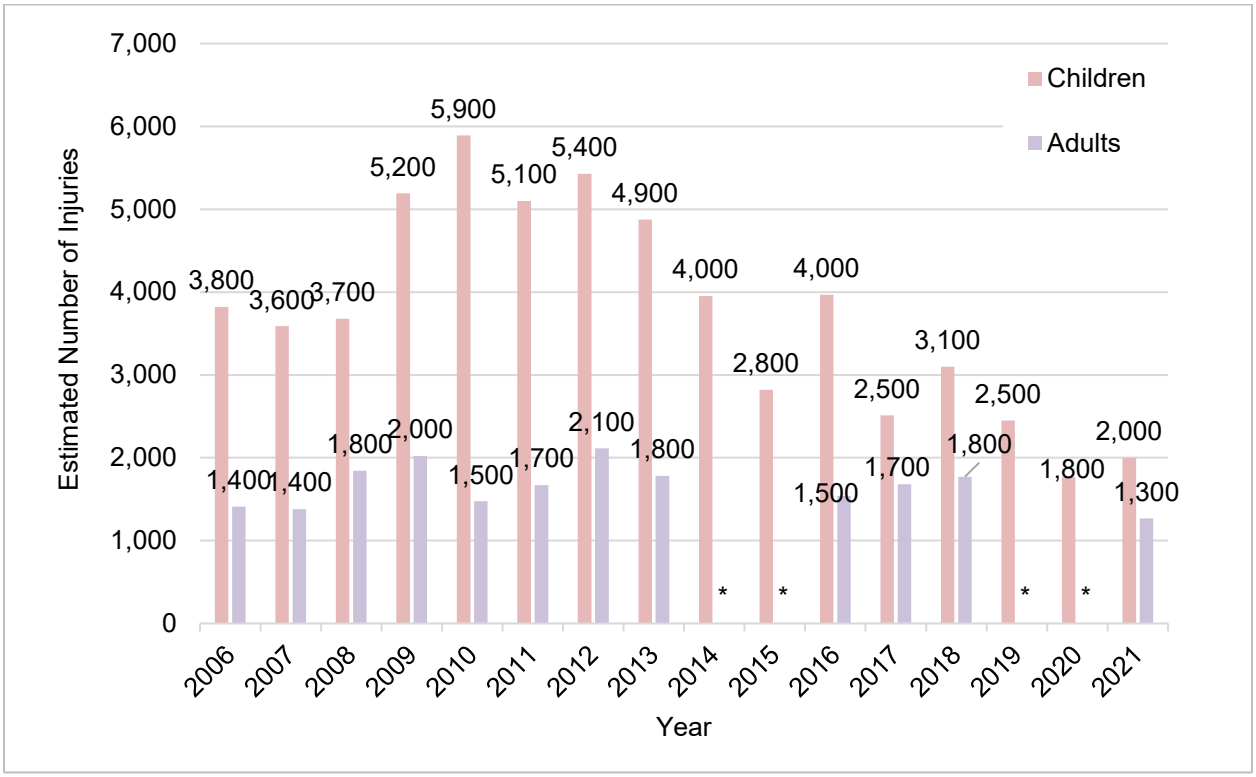

Source: NEISS database.
Data that were insufficient to support reliable statistical estimates are presented as "".*
Estimates are rounded to the nearest hundred and may not add up to the total, due to rounding.

Since the majority of the estimated number of ED-treated instability or tip-over injuries involving CSUs are to children, children will be the focus of the rest of the NEISS injury section of this memorandum.

Figure 4 presents the estimated number of CSU instability or tip-over ED-treated injuries to children by year and television involvement. Every year from 2006 through 2021, there have been more estimated CSU instability or tip-over ED-treated injuries to children that did not involve a television, compared to incidents involving a television. Over the 16-year period, there has been an estimated annual average of 2,800 CSU instability or tip-over ED-treated injuries to children, with no television involved; in the NPR, the annual average from 2006 through 2019 was an estimated annual average of 2,900 ED-treated injuries. There were not enough CSU instability or tip-over ED-treated incidents to children involving both a CSU and a television to make reliable estimates for the most recent 7 years, 2015 through 2021.

Figure 4. Estimated number of child CSU instability or tip-over ED-treated injuries by year and television involvement: January 1, 2006–December 31, 2021.

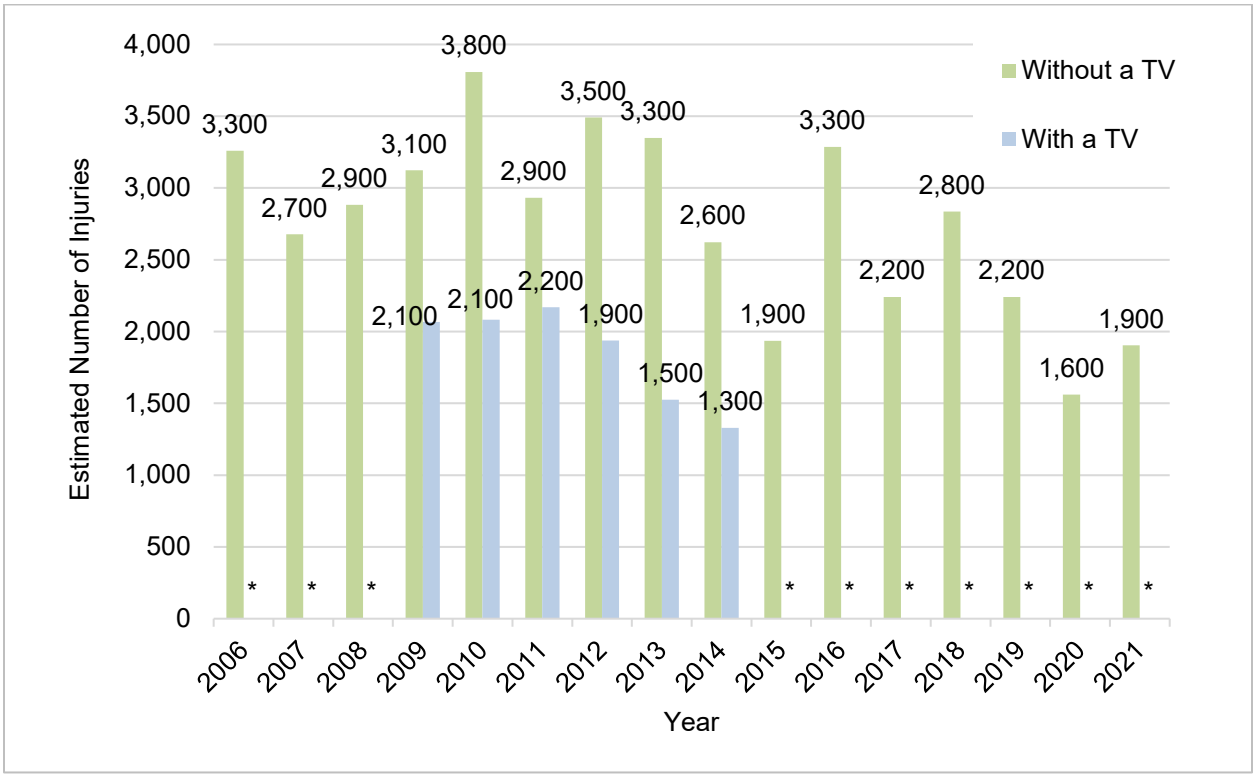

Source: NEISS database.
Data that were insufficient to support reliable statistical estimates are presented as "".*
Estimates are rounded to the nearest hundred and may not add up to the total, due to rounding.

As seen in Figure 3, for 2012 through 2021, there is a statistically significant linear decline in child injuries involving all CSUs (including televisions). This trend is consistent with what was reported in the NPR for NEISS data from 2010 through 2019. As seen in Figure 4, there is also a statistically significant linear decline in injuries to children involving CSU-only tip overs for 2012 through 2021. This trend is different from what was reported in the NPR: there was no statistically significant linear decline in injuries to children involving CSU-only tip overs for NEISS data from 2010 through 2019. Staff cautions that the estimated number of injuries treated in emergency departments were likely reduced by the COVID-19 pandemic for the years 2020 and 2021.[27]

[27] Schroeder, T., Cowhig, M. (2021). Effect of Novel Coronavirus Pandemic on 2020 NEISS Estimates (March–December, 2020). Available: https://www.cpsc.gov/s3fs-public/Covid-19-and-final-2020-NEISS-estimates-March-December-6b6_edited20210607_0.pdf.

Figure 5 shows the estimated number of CSU instability or tip-over ED-treated injuries to children by age and television involvement. Two-year-old children suffered the most ED-treated CSU injuries, followed by 3-year-olds, then 1-year-olds, and then 4-year-olds. Over the 16-year period, out of all CSU tip-over ED-treated child injuries, children 3 years old and younger suffered an estimated 66 percent (29,000 injuries) of injuries not involving a television, and an estimated 64 percent (10,200 injuries) of injuries involving a television. Children ages 7–17 years old were grouped together because there were not enough reportable CSU tip-over, ED-treated injuries for any single age in that range.

Figure 5. Estimated number of child CSU instability or tip-over ED-treated injuries by age and television involvement: January 1, 2006–December 31, 2021.

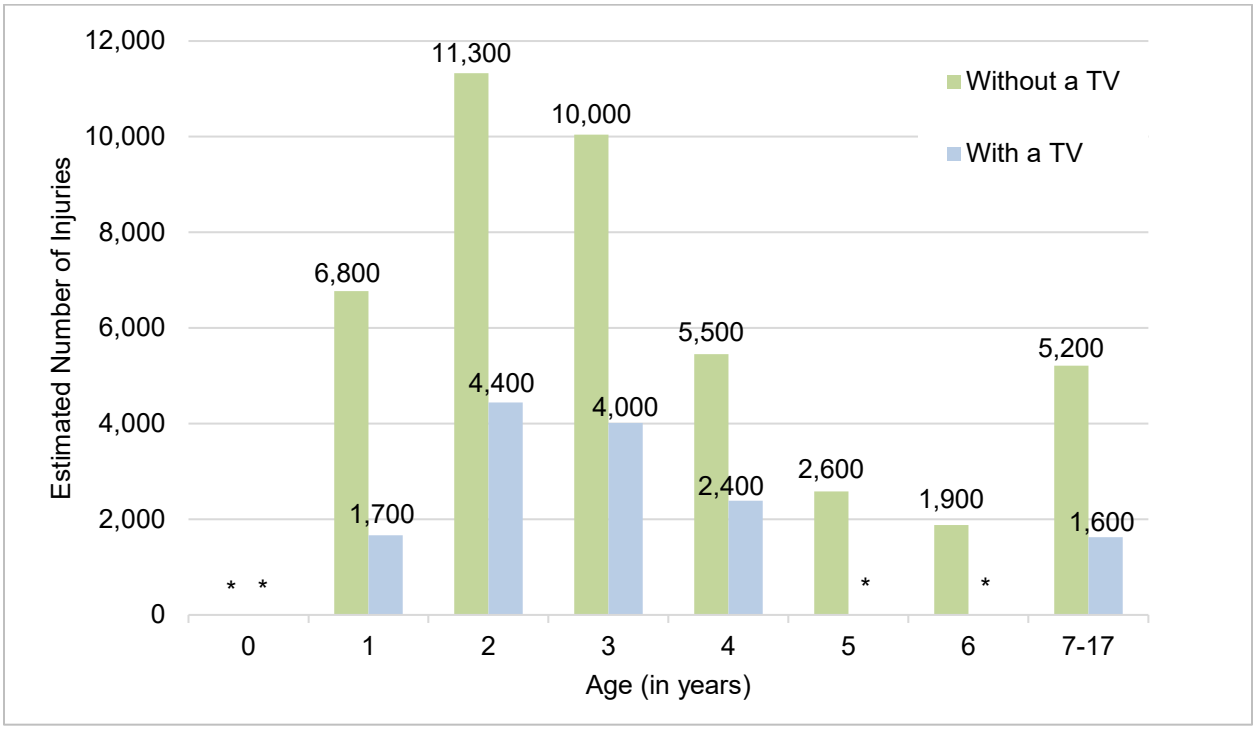

Source: NEISS database.
Data that were insufficient to support reliable statistical estimates are presented as "".*
Estimates are rounded to the nearest hundred and may not add up to the total, due to rounding.

Table 9 shows the estimated number of CSU instability or tip-over ED-treated injuries to children by injury type and television involvement. Similar to what was reported in the NPR, among the estimated injuries to children involving a television, 37 percent suffered internal organ injuries (including closed head injuries); when no television was involved, that proportion dropped to 23 percent.

Table 9. Estimated Number of Child (Under 18 Years) CSU Instability or Tip-Over ED-Treated Injuries by Injury Type and Television Involvement: January 1, 2006–December 31, 2021

Diagnosis	Estimated Number of ED-Treated Children Injuries			
	CSU-Only	% of CSU-Only	CSU and TV Involved	% of CSU and TV Involved
Contusion/Abrasion	16,900	38%	5,100	32%
Internal Organ Injury (includes closed head injuries)	10,000	23%	5,900	37%
Laceration	6,900	16%	1,400	9%
Fracture	3,900	9%	1,600	10%
All Other Diagnoses	6,500	15%	1,900	12%
Total Estimated Number of Injuries	**44,100**	**100%**	**16,000**	**100%**

Source: NEISS database.
Estimates are rounded to the nearest hundred and may not add up to the total, due to rounding.

Table 10 shows the estimated number of CSU instability or tip-over ED-treated injuries to children by body part injured and television involvement. The injuries to children were more likely to be head injuries when a television was involved than when no television was involved. Similar to what was reported in the NPR, of the estimated number of CSU instability or tip-over ED-treated injuries to children involving a television, 74 percent were head injuries, compared to 54 percent of injuries not involving a television. Of the estimated injuries to children not involving a television, 20 percent were leg, foot, or toe injuries; 14 percent were trunk or torso injuries; and 10 percent were arm, hand, or finger injuries.

Table 10. Estimated Number of Child CSU Instability or Tip-Over ED-Treated Injuries by Body Part Injured and Television Involvement: January 1, 2006–December 31, 2021

Body Part Injured	Estimated Number of ED-Treated Children Injuries			
	CSU-Only	% of CSU-Only	CSU and Television Involved	% of CSU and Television Involved
Head, Neck, Face	24,000	54%	11,800	74%
Leg, Foot, Toe	8,900	20%	2,100	13%
Trunk, Torso	6,100	14%	*	*
Arm, Hand, Finger	4,300	10%	*	*
All Other Body Parts	*	*	*	*
Total Estimated Number of Injuries	**44,100**	**100%**	**16,000**	**100%**

Source: NEISS database.
Data that were insufficient to support reliable statistical estimates are presented as "".*
Estimates are rounded to the nearest hundred and may not add up to the total, due to rounding.

Summary Conclusions

Of Reported CSU Instability or Tip-Over Incidents for All Ages:

- Children made up 74 percent of reported fatalities not involving a television, and 99 percent of reported fatalities involving a television, which are the same percentages seen in the NPR.
- Children made up 66 percent of the estimated number of ED-treated injuries not involving a television, and 95 percent of estimated injuries involving a television, which are the same percentages seen in the NPR.

Of Reported CSU Instability or Tip-Over Incidents to Children:

- In 98 percent of reported fatalities, and in 99 percent of the estimated number of ED-treated injuries, a chest, bureau, or dresser was the type of CSU involved, which are the same percentages seen in the NPR.
- For 2012 through 2021, including years 2020 and 2021 which were likely affected in some way by the COVID-19 pandemic, there is a statistically significant linear decline in child injuries involving all CSUs (including televisions); and there is a statistically significant linear decline in child injuries involving CSU-only tip overs. In the NPR, for 2010 through 2019, there was a statistically significant linear decline in child injuries involving all CSUs (including televisions); however, there was no linear trend detected in injuries to children involving CSU-only tip overs.

- For each year, between 2001 through 2017, there have been at least three reported fatalities with no television involved; 2010 was the only exception, with only 2 such fatalities. In 2018, there was one CSU tip-over fatality to a child without a television involved; and in 2019, there were two. Although reporting is considered incomplete for January 1, 2020 through April 30, 2022, CPSC staff is already aware of one CSU tip-over fatality to a child without a television involved that occurred in 2020 and five that occurred in 2021.
- Ninety-four percent of reported fatalities and 66 percent of ED-treated injuries to children involving only a CSU, and 79 percent of fatalities and 64 percent of ED-treated injuries to children involving both a CSU and a television happened to children ages 3 years and younger. These percentages were all the same in the NPR except for the ED-treated injuries to children 3 years and younger involving both a CSU and a television, for which the proportion was 63 percent.
- Similar to what was reported in the NPR, of fatalities not involving televisions, 63 percent resulted from injuries to the torso, and 13 percent resulted from injuries to the head.
- Similar to what was reported in the NPR, of the estimated number of ED-treated injuries not involving televisions, 14 percent were injuries to the torso, and 54 percent were head injuries.
- Similar to what was reported in the NPR, of incidents involving televisions, 88 percent of reported fatalities, and 74 percent of the estimated number of ED-treated injuries resulted from head injuries.

TAB B: Health Sciences Staff Review of Fatal and Nonfatal Incidents Associated with Clothing Storage Unit Tip Overs Involving Children

This page intentionally left blank.

United States
Consumer Product Safety Commission

Memorandum

TO: Kristen Talcott, Ph.D., Furniture Tip-Over Project Manager
Division of Human Factors, Directorate for Engineering Sciences

DATE: September 28, 2022

THROUGH: Mary Kelleher, Associate Executive Director
Directorate for Health Sciences

Stefanie Marques, Ph.D.,
Division Director of Pharmacology and Physiology

FROM: Suad Wanna-Nakamura, Ph.D., Physiologist
Division of Pharmacology and Physiology
Directorate for Health Sciences

SUBJECT: Health Sciences Staff Review of Fatal and Nonfatal Incidents Associated with Clothing Storage Unit (CSU) Tip Overs Involving Children\

Introduction

This memorandum focuses on new fatal and nonfatal incident data associated with clothing storage units (CSUs) tipping and falling on children that staff received after preparing the notice of proposed rulemaking (NPR) briefing package on CSU tip overs[1]; this new information covers the period between January 1, 2021, and April 30, 2022. The review of these tip-over incidents was carried out by Health Sciences (HS) staff to detail the hazard pattern and type of injuries reported and as summarized in Tab B of the NPR briefing package.

Discussion

Fatal Incidents Involving Children and CSUs

The Division of Hazard Analysis staff identified six new child fatalities associated with CSU tip-over incidents received after the time frame previously reported in the NPR, one in 2020 and five in 2021 (see Tab A for more details). HS staff reviewed all incident data, source documents, medical examiner autopsy reports, police report death certificates and other

[1] https://cpsc.gov/s3fs-public/Proposed%20Rule-%20Safety%20Standard%20for%20Clothing%20Storage%20Units.pdf.

information attached to the incidents. In all six incidents, the cause of death was listed as asphyxia or mechanical asphyxia due to chest compression caused by the CSU falling on and resting on the child's upper torso. None of the incidents reported the presence of a television on top of the CSU. As discussed in the HS staff analysis in the NPR briefing package, there has been an overall decline in the number of reported CSU incidents involving televisions that appears to coincide with the phasing-out of cathode ray tube (CRT) televisions, which can have considerable weight (Smith, 2010 and Lee and Volanth, 2015). CSU tip-over incidents involving CRT televisions can result in serious head injury and immediate death, and this remains likely even if the incident is witnessed, and the child is quickly rescued from the situation. In the absence of a television, the injury pattern associated with a CSU tip over generally differs and more often involves neck or chest compression. In these latter incidences, if there is immediate rescue from the situation, the likelihood of serious injury and death can be significantly reduced.

Weight, Height, and Age in Fatal Incidents Involving CSUs

The age of the children in the reported six fatal incidents ranged from 14 months to 7 years, with five of the six incidents involving children 3 years and under. The weight of the younger children ranged from 24.0-42.0 pounds (10.9- 19.1 kg). The weight of the 7-year-old was not reported and estimated by HF staff to be 57.7 pounds (25.9 kg).[2] The height of the children ranged from 24.0 inches to 46.0 inches (61.0-117.0 cm). The ages, weights, and heights of the victims for these new incidents are within the range previously reported in the NPR briefing package (3 months to 8 years, 19.6 pounds, and 45.1 pounds (9-21 kg), and 24.0 inches to 46.0 inches (61.0 cm to 117.0 cm), respectively). (Wanna-Nakamura 2021)

Only one incident reported both the empty weight and height of the CSU: 211.6 pounds (96.0 kg) and 37.8 inches[2] (96.0 cm). For the remaining five incidents the product weights were unknown, and the height of the products was reported for three incidents and ranged from 37.8 inches to 45.5 inches. These weights and heights are within the approximate range previously reported in the NPR briefing package (45 pounds to 200 pounds (20.4 kg to 90.7 kg) and 27.5 inches to 84.0 inches (70.0 cm to 213.0 cm, respectively). (Wanna-Nakamura 2021)

Nonfatal Incidents Reported in CPSC's CPSRMS

Based on data entered in CPSC's Consumer Product Safety Risk Management System (CPSRMS) databases subsequent to the NPR briefing package, CPSC staff identified 63 new nonfatal injury CSU tip-over incidents for children under 17 years of age (Tab A, Table 7). The types of injury ranged from cuts and bumps to concussions and a skull fracture. Of the 63 new incidents, 41 involved children under 17 years of age, 34 were 5 years and under, and 7 were 6-17 years of age. Where reported, the injuries in children 5 years and younger tended to be more severe, compared to older children and adults. One child under 5 years old had serious injuries requiring hospitalization; 11 others were treated in an emergency room or by other

[2] See Tab C for more details on how staff estimated weight.

medical staff. The level of injury was not reported in 52 incidents. The weight of the children, where reported, ranged from 26 pounds to 80 pounds (12.0 kg to 36 kg). The estimated weight range of nonfatal incidents is within the range previously reported in the NPR (19.6 pounds (90.0 kg) and 158.9 pounds (72.0 kg)). (Wanna- Nakamura 2021)

The new incident data collected after the NPR briefing package did not exhibit any changes in hazard pattern or types of injuries from what was previously reported. The types of injuries resulting from furniture tip over range from soft tissue injuries, such as cuts and bruises (usually a sign of internal bleeding), to skeletal injuries, bone fractures to arms, legs, and ribs, as well as potentially fatal injuries resulting from skull fractures, closed-head injuries, compressional and mechanical asphyxia, and internal organ crushing leading to hemorrhage. These types of injuries can occur with tip-over incidents involving CSUs only, and to CSUs with televisions, as well.

Pathophysiology of Head, Chest, and Neck Injuries

As discussed in Tab B of the NPR briefing package, the severity of injuries depends upon a variety of factors, but the primary determinants are the force generated at the point of impact, the length of entrapment, and the body part impacted. The head, neck, and chest are the most vulnerable. In most CSU tip-over cases, serious injuries and death are a result of head injuries caused by blunt force trauma, compressional and mechanical asphyxia caused by intense pressure on the chest, or circulatory system impairment through strangulation.

The impact force of a falling object is a function of the mass of the object, its speed before impact, and the characteristic properties of the surfaces involved. In a CSU tip-over, the CSU and floor surfaces affect the loads or energies transferred to the impacted body or body part. The severity of injury can also depend on the orientation of the body or body part when it is hit or trapped by the object. Sustained application of a force that affects breathing can lead to compressional asphyxia and death, although the severity of the injury or likelihood of death can be reduced if the child is quickly rescued from the situation. Thus, in most nonfatal injuries, an adult was present and able to rescue the child and reduce the likelihood of a fatal entrapment. The age of the child is also a factor because of a combination of their limited physical abilities, strength, and capacity to self-rescue.

Head Injuries

Cranial crush injuries caused by high-impact force, such as a television or part of the CSU, hitting a child's head can have serious clinical consequences that range from concussions and facial nerve damage to death (Befeler et.al., 2014 and Muniz, 2012). Such blunt head trauma injuries and death can occur even in cases of immediate rescue and rapid intervention.

Compressional and Mechanical Asphyxia

Upper torso injuries are the most common form of injury for CSU tip-over fatalities where a television is not involved. Compressional and mechanical asphyxia can result from mechanical forces generated by the sheer mass of an unyielding object, such as furniture, acting on the thoracic and abdominal area of the body. Children have thinner thoracic walls than adults with more cartilage in their ribs, resulting in a more elastic and highly compliant thorax (Niranjan,1990). While the elasticity of the chest wall reduces the likelihood of rib fracture, it also provides less protection from external forces. Impact to the thorax of an infant or small child can produce significant chest wall deflection and transfer large kinetic energy forces to vital thoracic organs, such as the lungs and heart. This can cause organ deflection and distention, which can lead to traumatic asphyxia, respiratory and circulatory system impairment, or failure. Biomechanically, the smaller body size of a child results in greater forces applied per unit of body area on impact. In addition, because of the proximity of organs, thoracic organ injuries can result in multisystem injuries. Because the blood volume of a pediatric patient is typically 7-8 percent of the total body weight (Sharma, 2016), a relatively small blood volume loss due to internal organ injuries can lead to decreased blood circulation and shock. This was reported in one CSU fatal incident, where the child, although immediately rescued, died on the scene due to internal bleeding. Additionally, the liver, which is located almost completely behind the lower right ribs in children, is susceptible to traumatic injuries, and traumatic liver injuries produce the highest mortality rate of any abdominal organ (Di Vincenti et al., 1998, Watson and Lowery, 1967 in Huelke, 1998).

Strangulation

Pressure on the blood vessels in the neck by a CSU or CSU component, such as a drawer, can result in traumatic asphyxia. Brain hypoxia can cause unconsciousness in less than 3 minutes, and if sustained, it can result in permanent brain damage or death. The sooner the compression force (CSU) is removed, and resuscitation initiated, the greater the likelihood that the patient will regain consciousness and recover from their injuries. Nonetheless, even victims revived after oxygen deprivation for periods of less than 4 minutes can suffer a wide range of serious consequences and face lifelong disabilities, including neurological deficits (Bernard et al., 1998, Rutkoski et al., 2011, Philip et al., 1998).

Self-Rescue

As discussed in Tab B of the NPR briefing package, a child's ability to avoid a falling CSU, in part, depends on the level of development of their reaction skills. Furthermore, their ability to self-rescue in a tip-over situation can depend upon whether they have sufficient strength to lift the furniture under which they have been trapped, or if they have sustained any injuries. Experiments examining the strength of young children (*e.g.*, Brown et al., 1973) suggest that it is unlikely that a 2- to 5-year-old child will be able to stop a CSU weighing in the range of those in the reported incidents from falling, and likewise, they would not be strong enough to push it

off if it fell on them. Additional factors include the size and weight of the child relative to the CSU and whether the child was only partially trapped allowing him/her to push the CSU off.

As reported in the literature (DiScala, et al., Rutkoski, et al., 2011, Platt and Stanley, 2011, Marnewick, et al., 2011) and demonstrated in CPSC data (Tab A), most of the fatal injuries sustained from a CSU tipping over involved children 3-years-old and younger. Most CSU tip-over fatalities involve children 1-year-old and 2-years-old, followed by 3-year-olds. This is the most vulnerable age group because, while they have the physical ability to climb and jump, they generally lack the cognitive awareness of hazards, lack the skills to react fast enough to avoid falling furniture, and generally, are not strong enough to move the heavy furniture off themselves when trapped underneath. Most tip-over deaths to children happen when a child climbs onto a CSU or into a drawer (Tab C), causing the CSU to tip over and entrap the body. If the child is unable to get out from under a heavy object that is hindering breathing, asphyxia can be fatal within minutes. An incident involving blunt head trauma can result in immediate death or loss of consciousness, which would prevent the victim from attempting self-rescue or calling for help.

Light-Weight CSUs

The lightest CSU involved in a fatal tip-over incident was a 5-drawer unit that weighed 34.0 pounds (15.0 kg) and fell onto a 2-year-old child. However, 34.0 pounds was the empty weight of the CSU in the configuration in which the unit was found after the incident, namely, the CSU was missing the bottom three drawers. The lightest weight non-modified CSU involved in a fatal tip-over incident was a 3-drawer chest that weighed 57 pounds (26 kg) empty, and was reportedly empty at the time of the incident. It tipped over and fell onto a 2-year-old child. There are some nonfatal incidents with CSUs weighing 28.5 pounds[3] to 50 pounds (14.0 kg to 23.0 kg). Staff is not aware of any reported incidents with CSUs that weigh below 28.5 pounds (14.0 kg). Staff is aware of lightweight plastic units marketed as clothing storage units, but we are not aware of any fatal and nonfatal CSPRMS tip-over incidents involving such products or similar light-weight units. In Tab C, ESHF staff discuss two incidents in the NEISS nonfatal data involving plastic units with unknown weights.

Conclusion

HS staff documented the incidences of CSU tip overs involving children that have resulted in a range of nonfatal injuries, as well as death. In both nonfatal and fatal CSU tip-over incidents involving children, the most common body parts injured were the head, neck, and torso.

[3] See Tab C. NOTE: the 28.5 pounds is a package weight, which is the combined weight of the CSU and packing material, as listed on the manufacturer's website. Staff did not have access to information on the weight of the CSU alone.

These injuries to the head, neck, and torso result from blunt force trauma to the head and/or sustained application of force to the chest and neck, which can result in respiratory or circulatory system impairment, or both. Blunt force trauma to the head can be the cause of an immediate fatal blow. If the product falls on a child's torso, and the child is not immediately rescued, this may result in internal bleeding, bone fractures, and organ failure. Sustained application of a force on the chest can lead to compressional asphyxia and death, while sustained pressure on the neck can lead to asphyxia by strangulation.

Most CSU tip-over fatalities involved children 1-year-old and 2-years-old, followed by 3-year-olds. These incidents often happen in the bedroom, where a child has been left alone to sleep, making it unlikely that a parent/caregiver becomes aware of the incident in time to rescue the child. Near-immediate rescue is critical for a good outcome; although in cases involving severe head injuries, fatalities occur despite rapid intervention. The likelihood of mitigating the severity of injuries is reduced in young children because of their susceptibility to severe injury and their limited ability to self-rescue.

References

Befeler AR, Daniels DJ, Helms SA, Klimo P Jr, Boop F (2014). Head injuries following television-related accidents in the pediatric population. J Neurosurg Pediatr. Oct;14(4):414-7.

Bernard, PA, Johnston C, Curtis SE and King WD (1998). Toppled Television Sets Cause Significant Pediatric Morbidity and Mortality. Pediatrics Vol. 102 No. 3 September 1998.

Brown, W. C., Buchanan, C. J., & Mandel, J. (1973). A Study of the Strength Capabilities of Children Ages Two through Six (NBSIR 73-156). U.S. Department of Commerce, National Bureau of Standards.

DiMaio VJ, DiMaio D. (2001). Asphyxia. In: Geberth VJ, series editor. Forensic pathology, 2nd edn. Boca Raton, FL: CRC Press, p. 229–77.

DiScala, C, Barthel, M., Sege R. (2001). Outcomes from Television Sets Toppling onto Toddlers Arch Pediatr Adolesc Med. 155(2):145-148. doi:10.1001/archpedi.155.2.145.

Di Vincenti. The liver is an organ which is not well designed for withstanding traumatic insults even in the adult. Traumatic liver injuries produce the highest mortality rate of any abdominal organ (et al, July, 1998 14 106 1968).

Ely SF, and Hirsch CS. Asphyxial deaths and petechiae; a review. *J Forensic Sci* 2000; 45:1274-7. https://www.ncbi.nlm.nih.gov/pmc/articles/PMC3400202/pdf/aam42_p093.pdf/?tool=EBI [Last accessed July, 2022]

Huelke DF, An overview of anatomical considerations of infants and children in the adult world of automobile safety designs university of Michigan transportation research institute Ann arbor, MI USA. 42nd Annual Proceedings Association For The Advancement Of Automotive Medicine October 5-7, 1998. Charlottesville, [Last accessed 4/2021] https://www.ncbi.nlm.nih.gov/pmc/articles/PMC3400202/pdf/aam42_p093.pdf/?tool=EBI

Lee, A. and Lee, A. (2017). *In-Depth Analysis of Nonfatal Injuries from TVs Falling off Furniture*. CPSC: Bethesda, MD. [Last accessed July, 2022] https://www.cpsc.gov/s3fs-public/NonFatalTVInjuriesreportOctober2016March17_0.pdf.

Lee, Arthur and Volanth, Casey, 2015, TVS - TIPPING THE SCALE TO SAFETY A look into falling TV dynamics and incidents, 2015 Directorate for Engineering Sciences U.S. Consumer Product Safety Commission, Rockville, Maryland (January 26, 2015). Available at https://cpsc.gov/s3fs-public/pdfs/TV-hazard-report-January2015.pdf. [last accessed July 2022]

Luke JL, Reay DT, Eisele JW, Bonnell HJ. (1985). Correlation of circumstances with pathological findings in asphyxial deaths by hanging: a prospective study of 61 cases from Seattle, WA. *JForensicSci.;30: JI40-7.*

Marnewick J, Dansey R, Morreau P, Hamill J. (2011). Television tip-overs: The Starship Children's Hospital experience and literature review. Injury. May;42(5):534-8.

Muñiz AE. (2012). Craniofacial injuries from television tip-over. Pediatr Emerg Care. 2012 Jan; 28(1):52-54.

Niranjan Kissoon, FRCPC, Jonathan Dreyer, FRCPC, Manjit Walia (1990). Pediatric trauma: differences in pathophysiology, injury patterns and treatment compared with adult trauma Can Med Assoc J; 142 (1) 27-38.

Philip A. Bernard, Carden Johnston, Scott E. Curtis, and William D. King, (1998). Toppled Television Sets Cause Significant Pediatric Morbidity and Mortality. Pediatrics Vol. 102 No. 3 September.

Platt MS1, Stanley C. (2011). TV tip-over morbidity and mortality in children. J Forensic Sci. 2011 Sep;56(5):1364-7.

Roo AC, Chounthirath T, and Smith GA (2013). Television-related injuries to children in the United States, 1990-2011. Pediatrics 132:267-274.

Rutkoski JD, Sippey M, Gaines BA. (2011). Traumatic television tip-overs in the pediatric patient population. J Surg Res. Apr; 166(2):199-204.

Smith, Charles (2010). CPSC Memorandum to Ian Hall, “CRT Televisions: Information on Unit Sales and Number in Use,” July 2, 2010.

Stickney, J. M. and Hagedorn, A. B. (1944). Chest Injuries and Traumatic Asphyxia. Proc. Mayo Clin., 19:207.

Wanna-Nakamura, S. (2021.) Tab B: Health Sciences Staff Review of Fatal and Nonfatal Incidents Associated with Clothing Storage Unit Tip Overs Involving Children. Staff Briefing Package: Draft Notice of Proposed Rulemaking for Clothing Storage Units. U.S. Consumer Product Safety Commission, Bethesda, MD. Available at: https://cpsc.gov/s3fs-public/Proposed%20Rule-%20Safety%20Standard%20for%20Clothing%20Storage%20Units.pdf

Wolfe BC and Harding BE (2011). Household Furniture tip-over deaths of young children. J Forensic Sci, 56 (4) 918-921.

Tab C: Human Factors Assessment for the Draft Final Rule on Clothing Storage Units

This page intentionally left blank.

United States
Consumer Product Safety Commission

Memorandum

TO: The File

DATE: September 28, 2022

THROUGH: Mark Kumagai, Associate Executive Director,
Directorate for Engineering Sciences

FROM: Kristen Talcott, Ph.D., Human Factors Engineer,
Division of Human Factors,
Directorate for Engineering Sciences

Rana Balci-Sinha, Ph.D., Director,
Division of Human Factors,
Directorate for Engineering Sciences

SUBJECT: Human Factors Assessment for the Draft Final Rule on Clothing Storage Units

---

1. Introduction

On February 3, 2022, the Commission published a notice of proposed rulemaking (NPR) concerning the risk of injuries and deaths associated with clothing storage units (CSUs) tipping over in the Federal Register (87 Fed. Reg. 6246, February 3, 2022). In Tab C of the NPR briefing package, staff of CPSC's Directorate for Engineering Sciences, Division of Human Factors (ESHF) discussed interactions and hazard patterns in CSU tip-over incidents, physical and behavioral characteristics of children at risk from CSU tip over, and other human factors considerations for the recommended proposed rule.[1]

In this memorandum, ESHF staff analyzes the new CSU tip-over incident data received since the NPR briefing package, summarizes the interactions and hazard patterns in CSU tip-over incidents, estimates the effectiveness of the draft final rule to address the hazards seen in CSU tip-over incidents, discusses human factors-related public comments on the NPR, and provides conclusions and recommendations for the draft final rule. This memorandum builds on the information and analysis in Tab C of the NPR briefing package, with a focus on new and/or

[1] Balci-Sinha, R., Talcott, K. (2021.) Tab C: Human Factors Assessment of the Clothing Storage Unit (CSU) Incidents, Research, and Child Physical and Behavioral Characteristics to Develop Recommendations for the Proposed Rule. Staff Briefing Package: Draft Notice of Proposed Rulemaking for Clothing Storage Units. U.S. Consumer Product Safety Commission, Bethesda, MD. Available at: https://cpsc.gov/s3fs-public/Proposed%20Rule-%20Safety%20Standard%20for%20Clothing%20Storage%20Units.pdf

U.S. Consumer Product Safety Commission
4330 East-West Highway
Bethesda, MD 20814

National Product Testing & Evaluation Center
5 Research Place
Rockville, MD 20850

cpsc.gov

different information. See Tab C of the NPR briefing package for additional details on ESHF staff analysis.

2. Data Used for Analysis of Incident Data

As in the NPR briefing package, ESHF staff used the CSU tip-over incident data sources outlined in the Directorate for Epidemiology, Division of Hazard Analysis (EPHA) memorandum (Tab A) for the analysis in this memorandum. These data include incidents reported in the NPR briefing package, as well as new data received after the timeframes searched for the NPR. The combined data set covers fatal Consumer Product Safety Risk Management System (CPSRMS) incidents from January 1, 2000 through April 30, 2022, nonfatal CPSRMS incidents from January 1, 2005 through April 30, 2022, and National Electronic Injury Surveillance System (NEISS) emergency department-treated (ED-treated) injuries from January 1, 2006 through December 31, 2021.[2]

In the analysis for this memorandum, ESHF staff continued to focus on the subset of tip-over incidents involving children and CSUs without televisions. As explained in the NPR, staff focused on the subset of tip-over incidents involving children and CSUs without televisions primarily because the majority of fatal and nonfatal incidents involve children and, in recent years (from 2010 to 2019), there was a statistically significant decrease in the number of CSU tip-over incidents that appeared to be driven by a decline in tip overs involving televisions. Staff concluded that the marketplace change from heavier cathode ray tube (CRT) televisions to lighter flat screen models likely played a role in the observed decrease in CSU tip over incidents with televisions.

Because the focus of this memorandum was on identifying child interactions, for the nonfatal CPSRMS incidents ESHF staff analyzed only the incidents that resulted in a tip over when a child started the interaction with the CSU; these incidents are a subset of the tip-over incidents involving children and CSUs reported by EPHA staff in Tab A. ESHF staff used incident documents and, when available, In-Depth-Investigation (IDI) reports, to identify interaction scenarios and other details that could impact the stability of the CSU.

The new data, received after the timeframes searched for the NPR, includes 6 fatal and 97 nonfatal CPSRMS tip-over incidents and 168 nonfatal NEISS tip-over incidents[3] that involved children and CSUs without televisions. The NEISS data set includes 11 incidents with a completed follow-up investigation.[4] Those incidents are represented in both the NEISS nonfatal

[2] See Tab A for additional details on the databases and data extraction.
[3] There was one fatality in the new NEISS data set; ESHF staff did not include this incident in this analysis of nonfatal NEISS data. The incident, which involved a 23-month-old child and happened in 2021, is included in the new CPSRMS fatal incident data analyzed above.
[4] CPSC staff initiate follow-up investigations of select NEISS injuries. CPSC staff attempted to follow-up with consumers from 133 NEISS incidents, and were successful for 11 incidents.

data presented here, and in the CPSRMS nonfatal data.[5] Because the information from the IDIs is more detailed, and is generally provided by the caregiver, the information from the investigations may be different from that in the NEISS narrative *(e.g.*, information on type and details of interaction, information on the product, information about the child).

The data presented in this memorandum also include changes based on new information, and corrections to older information based on additional analysis. ESHF staff added seven and removed one nonfatal CPSRMS incidents from the NPR data set. Among the seven additional incidents, four were existing NPR incidents that had new IDIs with additional information that a child started the interaction that resulted in CSU tip-over, and three were existing NPR incidents that were mistakenly excluded from the ESHF staff analysis in the NPR. The removed incident, involving a 2-year-old with an unknown interaction, was found to have occurred outside of the United States. Staff also removed one nonfatal NEISS incident from the NPR timeframe, involving a 16-year-old with an unknown interaction, because the narrative implied that the victim may have intentionally caused the tip over.

For the summary data, staff analyzed the new data and data changes along with the 89 fatal and 263 nonfatal CPSRMS tip-over incidents, and 1,463 nonfatal NEISS tip-over incidents that involved children and CSUs without televisions from the NPR data set.

3. Analysis of New Data

New Fatal CPSRMS Incident Data

The ages of children in the six new fatal CPSRMS incidents ranged from 1 year (14 months) to 7 years old; in five out of six of the incidents, the child was 3-years-old or younger. All of the incidents were unwitnessed. Two incidents, one with a 1-year-old and one with a 2-year-old, had a reported interaction, both were climbing. The interaction was not reported for the remaining four incidents (Table 1).

[5] Data from the same incident may be coded differently in each data set. Staff relied on the limited NEISS narrative for the NEISS analysis. For the CPSRMS nonfatal analysis, staff relied on investigative data, which does not include the NEISS narrative.

Table 1. Interactions in New Fatal CPSRMS Tip-Over Incidents Involving Children and CSUs Without Televisions by Age (Reported to CPSC Between January 1, 2021 to April 30, 2022)

	Age (years)								
Interaction Scenario	<2	2	3	4	5	6	7	Older than 7	Grand Total
Climbing	1	1							2
Unknown	2		1				1		4
Total Fatal Incidents	3	1	1	0	0	0	1	0	6

The child's weight was reported in five incidents, and ranged from 24 pounds (14-month-old) to 42 pounds (3-year-old); the weight of the child in the remaining incident (7-year-old boy) was estimated to be 57.7 pounds.[6]

CPSC staff were able to determine the CSU weight for one incident; the unit in this incident weighed 212 pounds empty;[7] the CSU weight in the remaining five incidents was unknown. Product height was reported for three incidents and ranged from 37.75 inches to 45.5 inches.

The flooring type was reported for three incidents: two occurred on carpet, and one on hardwood; the flooring type was not reported for the remaining three incidents. Indications of drawer fill were available for three incidents: all three involved partially filled units; drawer fill was unknown for the remaining three incidents. Two of the incidents involved 4-drawer units, and two involved 6-drawer units; the total number of drawers was unknown for the remaining two incidents. No incidents reported the number of drawers open when the CSU tipped over.

Overall, ESHF staff did not identify any new interaction scenarios or hazard patterns in the new fatal CPSRMS incident data.

New Nonfatal CPSRMS Incident Data

Among the 97 new nonfatal CPSRMS tip-over incidents involving children and CSUs without televisions, 48 had a reported age, which ranged from 9 months to 10 years old; in 69 percent of the incidents, the child was three years old or younger.

The type of interaction was reported in 61 incidents and was not reported or was unknown in 36 incidents. In one incident, the interaction of another child reportedly caused the tip over. Of the remaining incidents with reported interactions, the most frequent interaction was climbing (26 of 60), followed by opening drawers (21 of 60), and putting items in/taking them out of a drawer (8

[6] Based on 2021 CDC Anthropometric reference, 50th percentile weight. The ESHF staff memo in Tab C of the NPR briefing package includes details about how staff estimated weight.
[7] CPSC staff collected and analyzed the incident sample.

of 60). Climbing (11 of 23), followed by opening drawers (9 of 23) were also the top two interactions for children 3 years old and younger (Table 2).

Table 2. Interactions in New Nonfatal CPSRMS Tip-Over Incidents Involving Children and CSUs Without Televisions by Age (Reported to CPSC Between January 1, 2021 to April 30, 2022)

	Age (years)																		
Interaction	<2	2	3	4	5	6	7	8	9	10	11	12	13	14	15	16	17	Unk	Grand Total
Climbing	3	7	1	1														14	26
Opening drawers	4	2	3	1	2		1		1									7	21
Other*																		1	1
Other Person																		1	1
Pulled on	1							1										1	3
Putting item in/out drawer	1			2	1	1			1	1								1	8
Reaching		1																	1
Unknown	1	5	4	1	1													24	36
Total Nonfatal Incidents	10	15	8	5	4	1	1	1	2	1	0	0	0	0	0	0	0	49	97

*Child described as "standing on" the CSU.

The percentage of nonfatal incidents attributable to the interaction scenarios varies from that reported in the NPR, with a greater percentage of reported climbing interactions, and a lower percentage of reported opening drawer interactions in the new data than in the NPR data. As staff noted in the NPR briefing package, the nonfatal CPSRMS data are the most susceptible to reporting bias because the data are largely based on voluntary self-reports from consumers; therefore, nonfatal CPSRMS data is less likely to represent the true distribution of interactions than the other two data sources (fatal CPSRMS and nonfatal NEISS).

The child's weight was reported in 11 incidents, and ranged from 20 pounds (2-year-old) to 35 pounds (2-year-old); ESHF staff estimates the weight of the children in the remaining incidents to be between 22.3 pounds (13-month-old) and 87 pounds (10-year-old).[8]

The CSU weight was reported for five incidents; the weight of the empty CSU for these units ranged from 130 pounds to 198 pounds. Staff identified one additional unit with a package

[8] For incidents without a reported child weight, ESHF staff estimated the weight using the 50th percentile weight by age using Fryar CD, Carroll MD, Gu Q, Afful J, Ogden CL. (2021). Anthropometric reference data for children and adults: United States, 2015–2018. National Center for Health Statistics. Vital Health Stat 3(46). See Tab C of the NPR briefing package for more details.

weight of 28.5 pounds,[9] and one with a package weight of 39.7 pounds; both of these units are under 27 inches in height (26.8, and 22.6 inches, respectively).

The flooring type was reported for 27 incidents: 17 occurred on carpet, and 8 on hardwood or wood, and 1 on tile; the flooring type was not reported for the remaining 70 incidents. Indications of drawer fill were available for nine incidents: one involved an empty unit, four involved partially full units, and four involved full units; drawer fill was unknown for the remaining 88 incidents. The number of drawers open when the CSU tipped over was reported for 30 incidents: 1 involved no open drawers, 11 involved one open drawer, 7 involved less than or equal to half the drawers open, 1 involved more than half the drawers open, and 7 involved all drawers open; 3 incidents involved multiple open drawers, but the number of open drawers and/or the total number of drawers was not reported.

For the seven added incidents,[10] one involved climbing (6-year-old), one involved opening drawers (16-year-old), one involved a child in a drawer (4-year-old), one involved leaning or pushing down on a drawer (3-year-old), and one involved a child jumping around near the CSU (unknown age); the interaction in the remaining two incidents was unknown (2-year-old and 7-year-old). The child's weight was reported in two incidents: 50 pounds (6-year-old), and 125 pounds (16-year-old); ESHF staff estimates the weight of the children in the remaining incidents to be between 30.1 pounds (2-year-old) and 57.7 pounds (7-year-old). Product height was reported for three incidents and ranged from 22 inches to 37.8 inches. The flooring type was reported for five incidents: three occurred on carpet, and two on hardwood or wood; the flooring type was not reported for the remaining two incidents. Indications of drawer fill were available for two incidents: both involved full units; drawer fill was unknown for the remaining five incidents. The number of drawers open when the CSU tipped over was reported for two incidents: both involved one open drawer.

Overall, ESHF staff did not identify any new interaction scenarios or hazard patterns in the new nonfatal CPSRMS incident data.

New Nonfatal NEISS Data

The reported age of children involved in the 168 new nonfatal NEISS incidents ranged from 10 months to 17 years.[11] Among the 168 new nonfatal NEISS incidents involving children and CSUs without televisions, the type of interaction was reported in 87 incidents and was not reported or was unknown in 81 incidents. In four incidents with a reported interaction, the child

[9] The package weight is the combined weight of the CSU and packing material, as listed on the manufacturer's website. Staff did not have access to information on the weight of the CSU alone.
[10] ESHF staff added seven and removed one nonfatal CPSRMS incidents from the NPR timeframe. Among the seven additional incidents, four were existing NPR incidents that had new IDIs with additional information that a child started the interaction that resulted in CSU tip over, and three were existing NPR incidents that were mistakenly excluded from the ESHF staff analysis in the NPR.
[11] There were two incidents involving a 10-month-old child: in one, a sibling initiated the interaction; in the other, the interaction is unknown. The youngest child involved in an incident with a victim-initiated interaction was 11 months old.

was injured because of another person's interaction with the CSU. Of the remaining incidents with reported interactions, 76 percent involved climbing (63 of 83). The second most frequently reported interaction was opening drawers, accounting for 8 percent of the interactions (7 of 83). For children 3 years old or younger, climbing was almost 80 percent of reported interactions (46 of 58, Table 3). These percentages are almost identical to those reported in the NPR.

Table 3. Interactions by Age in New Nonfatal NEISS Tip-Over Incidents Involving Children and CSUs Without Televisions by Age (January 1, 2020 to December 31, 2021)

	Age in Years																	
	<2	2	3	4	5	6	7	8	9	10	11	12	13	14	15	16	17	Grand Total
Climbing	7	20	19	9	4	1	1		1	1								63
Hanging				1														1
In drawer	1	1	2		1													5
Opening drawers	1	1	2	1		1		1										7
Other person	2			1													1	4
Pulled on		1					1											2
Pulled up	1																	1
Putting item in/out drawer							1											1
Reaching				1	1	1												3
Unknown	15	20	18	11	6	1	1		1				1	2	3		2	81
Total nonfatal incidents	27	43	41	24	12	4	4	1	2	1	0	0	1	2	3	0	3	168

Overall, ESHF staff did not identify any new interaction scenarios or hazard patterns in the new nonfatal NEISS incident data.

4. Data Summary

Age of Children Involved in Incidents

Figure 1 shows the ages for the full fatal CPSRMS data set for tip-over incidents involving children and CSUs with no television, which includes the data analyzed for the NPR and the new data. Children in fatal CPSRMS tip-over incidents involving CSUs without televisions were 11 months through 7 years old. A total of 36 fatal incidents involved children under 2 years of age, 31 fatal incidents involved 2-year-old children, and 22 incidents involved 3-year-old children. There were two incidents involving 4-year-old children, one incident involving a 5-year-old child, one incident involving a 6-year-old child, and two incidents involving 7-year-old

children. Ninety-four percent (89 of 95) of children in fatal CPSRMS tip-over incidents involving CSUs without televisions were 3 years old or younger.

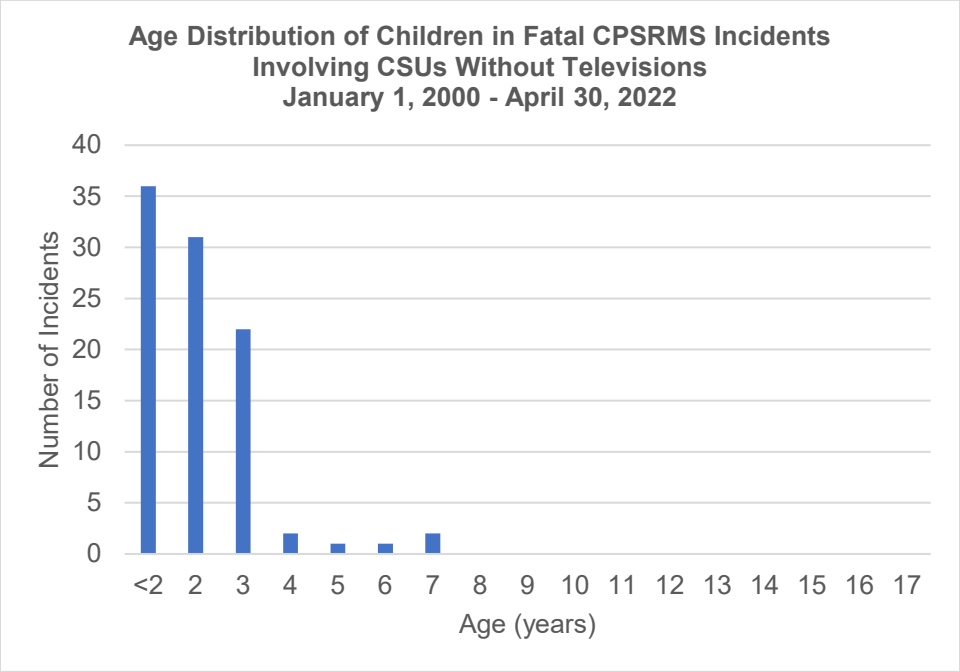

Figure 1. Ages of children in fatal CPSRMS tip-over incidents involving CSUs without televisions from January 1, 2000 - April 30, 2022.

Figure 2 shows the ages for the full nonfatal CPSRMS data set for tip-over incidents involving children and CSUs with no television, which includes the data analyzed for the NPR and the new data, as well as the changes to the NPR data set discussed above.

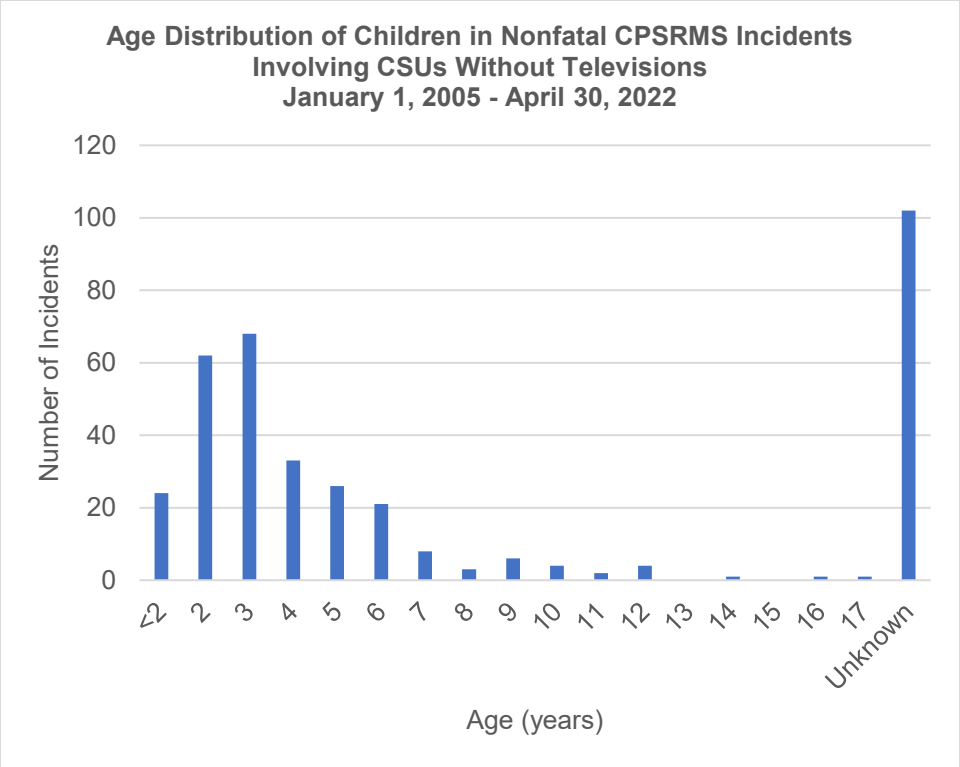

Figure 2. Ages of children in nonfatal CPSRMS tip-over incidents involving CSUs without televisions from January 1, 2005 - April 30, 2022.

Among the nonfatal CPSRMS tip-over incidents involving children and CSUs without televisions with a reported age, 3-year-old children were involved in the highest number of incidents (68 incidents) followed by 2-year-old children (62 incidents).

Figure 3 shows the ages for the full nonfatal NEISS data set for tip-over incidents involving children and CSUs with no television, which includes the data analyzed for the NPR and the new data, as well as the change to the NPR data set discussed above.

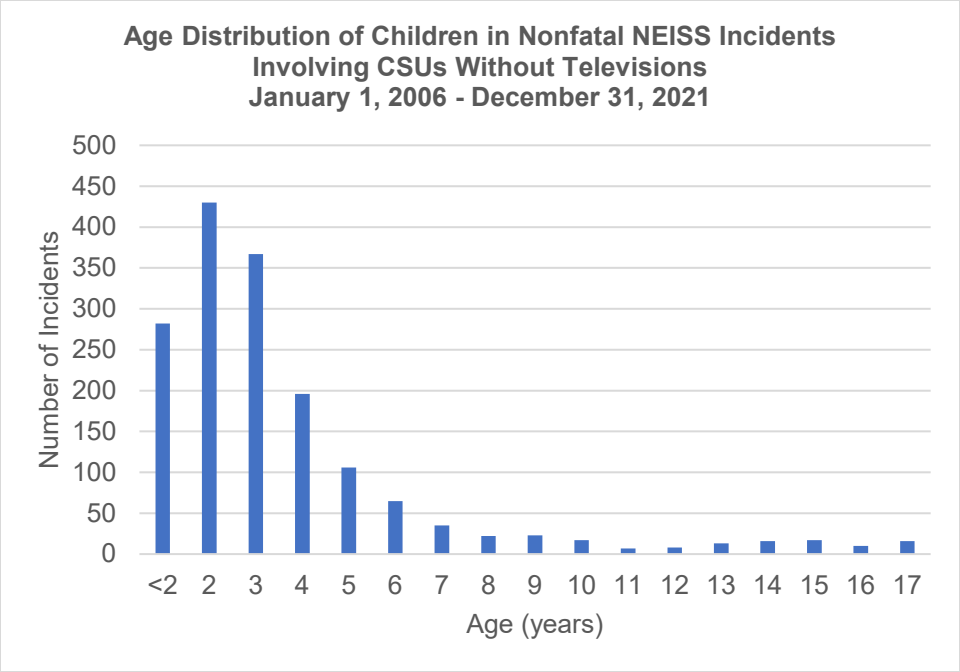

Figure 3. Ages of children in nonfatal NEISS tip-over incidents involving CSUs without televisions from January 1, 2006 – December 31, 2021.

Nonfatal NEISS tip-over incidents involving children and CSUs without televisions follow a similar distribution as the nonfatal CPSRMS incidents, with the highest number of incidents involving 2-year-old children, followed by 3-year-old children, and children less than 2 years old. Sixty-six percent (1079 of 1630) of children in nonfatal NEISS tip-over incidents involving CSUs without televisions were 3 years old or younger.

Weight of Children Involved in Incidents

Among the 95 fatal CPSRMS tip-over incidents involving children and CSUs without televisions, the child's weight was reported in 49 incidents and ranged from 18 pounds (11-month-old) to 45 pounds (2-year-old and 7-year-old). ESHF staff-estimated weight for the 46 incidents without a reported weight ranged from 19.6 pounds (11-month-old) to 57.7 pounds (7-year-old).[12] Among the 366 nonfatal CPSRMS tip-over incidents involving children and CSUs without televisions, the child's weight was reported in 60 incidents and ranged from 20 pounds (18-month-old) to 125 pounds (16-year-old). ESHF staff-estimated weight for the remaining 195 incidents with a

[12] In NPR, the maximum age of a child without a reported weight was a 5-year-old boy; the 50th percentile weight of 5-year-old boys is 45.1 pounds. The NPR data set also included an incident with a 6-year-old child and an incident with a 7-year-old child, both with reported weights that were below the 50th percentile weights by age: the 6-year-old child was 37 pounds and the 7-year-old child was 45 pounds. The new data set included an incident involving a 7-year-old boy without a reported weight; the 50th percentile weight of 7-year-old boys is 57.7 pounds.

reported age ranged from 19.6 pounds (11-month-old) to 158.9 pounds (17-year-old). Overall, the mean reported children's weight for CPSRMS incidents was 34.7 pounds, and the median was 32.0 pounds; the mean of estimated children's weight for CPSRMS incidents was 38.7 pounds, and the median was 32.8 pounds.

For the 1630 nonfatal NEISS tip-over incidents involving children and CSUs without televisions, the ESHF staff-estimated weights ranged from 15.8 pounds (3-month-old) to 158.9 pounds (17-year-old). The mean estimated children's weight for nonfatal NEISS incidents was 40.1 pounds, and the median was 32.8 pounds.

Interaction Scenarios

Table 4 shows the interactions for the full fatal CPSRMS data set for tip-over incidents involving children and CSUs with no television, which includes the data analyzed in the NPR and the new data.

Table 4. Interactions in Fatal CPSRMS Tip-Over Incidents Involving Children and CSUs Without Televisions by Age from January 1, 2000 - April 30, 2022

	Age (years)							
Interaction	<2	2	3	4	5	6	7	Grand Total
Climbing	14	12	9	1			1	37
In drawer	2	4	2					8
Opening drawers	1	2			1			4
Unknown	19	11	11	1		1	1	46
Total fatal incidents	36	31	22	2	1	1	2	95

Among the 95 fatal CPSRMS tip-over incidents involving children and CSUs without televisions, 49 reported the type of interaction in the incident narrative or IDI report; the type of interaction was either not reported or unknown in 46 incidents. Climbing was the most frequent reported interaction, making up 76 percent of fatalities with a reported interaction (37 of 49 incidents). The second most frequent reported interaction was sitting, laying, or standing in a drawer, which made up 16 percent of fatalities (8 of 49 incidents) with a reported interaction.

Table 5 shows the interactions for the full CPSRMS nonfatal data set for tip-over incidents involving children and CSUs with no television, which includes the data analyzed for the NPR and the new data, as well as the changes to the NPR data set discussed above.

Table 5. Interactions in Nonfatal CPSRMS Tip-Over Incidents Involving Children and CSUs Without Televisions by Age from January 1, 2005 - April 30, 2022

	Age (years)																		
Interaction	<2	2	3	4	5	6	7	8	9	10	11	12	13	14	15	16	17	Unk	Grand Total
Climbing	4	12	12	7	3	1				1								19	59
In drawer	1			1															2
Leaned/ pushed down open drawer	1	1	2	1														1	6
Opening drawers	8	19	31	13	17	9	4		1	1	1	1				1		17	123
Other		1				1												2	4
Other Person																		1	1
Pulled on	3	2	1					1	1		1							3	12
Putting item in/out drawer	1	1	1	3	2	3			1	1		1						4	18
Reaching		1																	1
Unknown	6	25	21	8	4	7	4	2	3	1		2		1			1	55	140
Total nonfatal incidents	24	62	68	33	26	21	8	3	6	4	2	4		1		1	1	102	366

Among the 366 nonfatal CPSRMS tip-over incidents involving children and CSUs without televisions, the type of interaction was reported in 226 incidents and was not reported or was unknown in 140 incidents. In one incident, the interaction of another child reportedly caused the tip over. Of the remaining incidents with reported interactions, the most frequent interaction was opening drawers (123 of 225), followed by climbing (59 of 225), and putting items in/taking them out of a drawer (18 of 225). Opening drawers, followed by climbing, were also the top two interactions for children 3 years old and younger. Fifty-four percent of the nonfatal CPSRMS incidents with a reported interaction involved opening drawers, and 26 percent involved climbing.

Table 6 shows the full NEISS data set for tip-over incidents involving children and CSUs with no television, including the data analyzed for the NPR and the new data, as well as changes to the NPR data set discussed above.

Table 6. Interactions in Nonfatal NEISS Tip-Over Incidents Involving Children and CSUs Without Televisions by Age from January 1, 2006 – December 31, 2021

	Age (years)																	
Interaction	<2	2	3	4	5	6	7	8	9	10	11	12	13	14	15	16	17	Grand Total
Climbing	71	148	128	69	29	15	7	4	1	2			1					475
Hanging				1														1
Hit	3		1														1	5
In drawer	6	6	7	1	1	1		1										23
Jump		2			1													3
On top			1	1										1				3
Opening drawers	8	10	13	9	1	3	1	2		1				1				49
Other	1	1		2	2				2			1				2		11
Other person	6	5	5	4	1	2		1									2	26
Playing in drawer	2	1	1		1													5
Pulled on	7	5	3	2			1											18
Pulled up	1			1														2
Putting item in/out drawer		1	3	1	5	2	2											14
Reaching		1	2	1	1	3				2								10
Swinging				1														1
Unknown	177	250	203	103	64	39	24	14	20	12	7	7	12	14	17	8	13	984
Total Nonfatal incidents	282	430	367	196	106	65	35	22	23	17	7	8	13	16	17	10	16	1630

Among the 1,630 nonfatal NEISS incidents involving children and CSUs without televisions, the type of interaction was reported in 646 incidents and was not reported or was unknown in 984 incidents. In 26 incidents with a reported interaction, the child was injured because of another person's interaction with the CSU. Of the remaining incidents with reported interactions, 77 percent involved climbing (475 of 620). The second most frequently reported interaction was opening drawers, accounting for 8 percent of the interactions (49 of 620). For children 3 years old or younger, climbing was 80 percent of reported interactions (347 of 433).

Drawer Fill

Table 7 shows the drawer fill for the full fatal and nonfatal data set for tip-over incidents involving children and CSUs with no television, which includes the data analyzed for the NPR and the new data, as well as the changes to the NPR data set discussed above.

Table 7. Drawer Fill for Fatal and Nonfatal CPSRMS CSU Tip-Over Incidents Involving Children and CSUs Without Televisions†

	Fatal Incidents	Nonfatal Incidents
Empty	3	8
Partially Full	39	57
Full	14	13
Unknown	39	288
Total incidents	95	366

† Covers fatal incidents from January 1, 2000 - April 30, 2022 and nonfatal incidents from January 1, 2005 - April 30, 2022.

Consistent with the data reported in the NPR, for incidents with reported drawer fill level, most involved partially filled or full drawers (95 percent of fatal incidents and 90 percent of nonfatal incidents).

Floor Surface

Table 8 shows the floor surface for the full fatal and nonfatal CPSRMS data set for tip-over incidents involving children and CSUs with no television, which includes the data analyzed for the NPR and the new data, as well as the changes to the NPR data set discussed above.

Table 8. Floor Surface for Fatal and Nonfatal CPSRMS CSU Tip-Over Incidents Involving Children and CSUs Without Televisions†

	Fatal Incidents	Nonfatal incidents
Carpet*	47	67
Hardwood, Wood**	9	21
Front legs on carpet, back legs on wood	0	1
Tile/Linoleum	2	2
Unknown	37	275
Total incidents	95	366

*Includes rug, ** Includes laminate wood
† Covers fatal incidents from January 1, 2000 - April 30, 2022 and nonfatal incidents from January 1, 2005 - April 30, 2022.

Consistent with the data in the NPR, carpet was by far the most prevalent reported floor surface. For the incidents where floor surface was reported, in 81% of fatal incidents (47 of 58) and 74% of nonfatal incidents (67 of 91) the CSUs were on carpet. The reports for 32 of the of the 47 fatal CPSRMS tip-over incidents involving carpet included photos with visible carpet. All carpet in these pictures appeared to be typical wall-to-wall carpeting. Four appear to be a looped pile carpet, and 28 appeared to be cut pile. ESHF staff found two incidents with reported “shag”

carpeting, including one fatal incident. The floor surface was reported to be a rug in one fatal incident.

5. Addressability of Incidents Based on Nonfatal NEISS Data

Similar to the NPR, staff used nonfatal NEISS interaction scenarios to estimate the number of incidents that could be prevented with the draft final rule performance requirements, as shown below:

Climbing. Staff estimated the addressability of climbing incidents based on the scenario in which all drawers were filled and opened and that the CSU was placed on carpet for all reported climbing interactions. Staff calculated the addressability of these incidents using the weight range for each age. For example, with the recommended test requirements, virtually all climbing incidents involving 2-year-old children are addressable, because almost all 2-year-old children weigh well under 51.2 pounds (95th percentile 2-year-old boys weigh 38.8 pounds and girls weigh 34.7 pounds). Staff estimates that 95 percent of such climbing scenarios are addressable for 3-year-old children; 92 percent are addressable for 4-year-old children; 64.5 percent for 5-year-old children; 50 percent for 6-year-old children; 25 percent for 7-year-old children; and 7.1 percent for 8-year-old children.[13]

Playing in drawer, putting items in/out of drawer, reaching, pulling up, hitting the CSU. Staff estimates that these scenarios will all generate smaller tip-over moments than the recommended test methods; therefore, staff concludes that these scenarios are addressable.

Jumping, falling from top of CSU (on top), swinging, and hanging. In the NPR, staff assessed seven incidents separately considering the possible moment and reported age of the child and determined that five of the seven would be addressable: two of the three jumping cases, two of the three falling from top (on top) incidents, and one swinging incident. For the new data, staff evaluated the one case involving a child hanging on the dresser. Based on the possible moment and reported age of the child, staff determined that this case would be addressable. Overall, staff determined that six of the eight incidents within this category are addressable.

Opening drawers and pulling on the CSU. Staff assesses that opening drawer incidents and pulling on interactions are addressable for some children and not addressable for others, because those actions are likely to generate higher moments than the recommended test requirement for older children. The staff-recommended pull strength of 17.2 pound-force is based on study participants with an age range of 2 to 5 years and the mean weight of 16.3

[13] To calculate the addressability of climbing incidents, staff considered the weight distribution of each age in the anthropometric data and calculated the number of incidents addressable for each age, then added the number of addressable incidents for all ages and divided that number to the total number of climbing incidents.

kilograms (36 pounds). This weight is over the 50th percentile weight of 3-year-old children; so, we estimate that the pull force test requirement will address drawer opening and pulling on CSU incidents for 50 percent of 3-year-olds, 95 percent for 2-year-olds, 100 percent for under 2 years, 25 percent for 4-year-olds, 10 percent for 5-year-olds, and will not address these incidents for 6 years old and up.

Other. In the NPR briefing package, staff evaluated each of the 11 incidents classified as "other" and found that three to four were addressable with the recommended test procedure.

Summary. Staff calculates that 91.0 percent of all nonfatal NEISS incidents involving climbing interactions are likely to be addressed with the recommended test procedure. Staff notes that this number is a low estimate, because staff assumed that all climbing incidents occurred with all open and filled drawers on CSUs located on a carpeted surface. This is a worst-case stability condition. Even if all drawers were filled and the CSU was placed on a carpeted surface, it is unlikely that all climbing incidents occurred with all of the drawers open.

Staff calculates that 78.6 percent of interactions that did not involve climbing in the nonfatal NEISS incidents with known types of interactions are likely to be addressable with the recommended test procedure. Staff notes that this number is a low estimate for certain scenarios. For example, it is unlikely that all opening drawer incidents required 17.2 pounds of pull force. In some incidents, merely opening multiple drawers without an additional pull force caused a tip over; a higher percent of these incidents would be addressable because pull strength would not be a factor, so both young and older children's interactions would be addressed. In addition, as with the climbing incidents, even if all drawers were filled and the CSU was placed on a carpeted surface, it is unlikely that all incidents occurred with all of the drawers open.

Overall, with these scenarios, staff estimates that 83.9 percent of the known interactions in nonfatal NEISS incidents are addressable.[14]

Based on the nonfatal NEISS data involving children and CSUs without televisions, Figure 4 shows the addressability of climbing incidents and Figure 5 shows the addressability of incidents that were not caused by child's climbing ("non-climbing") by age.

[14] These figures are similar to the addressability estimates calculated for the NPR. Staff calculated the ratio of the number of addressable incidents by the total number of incidents.

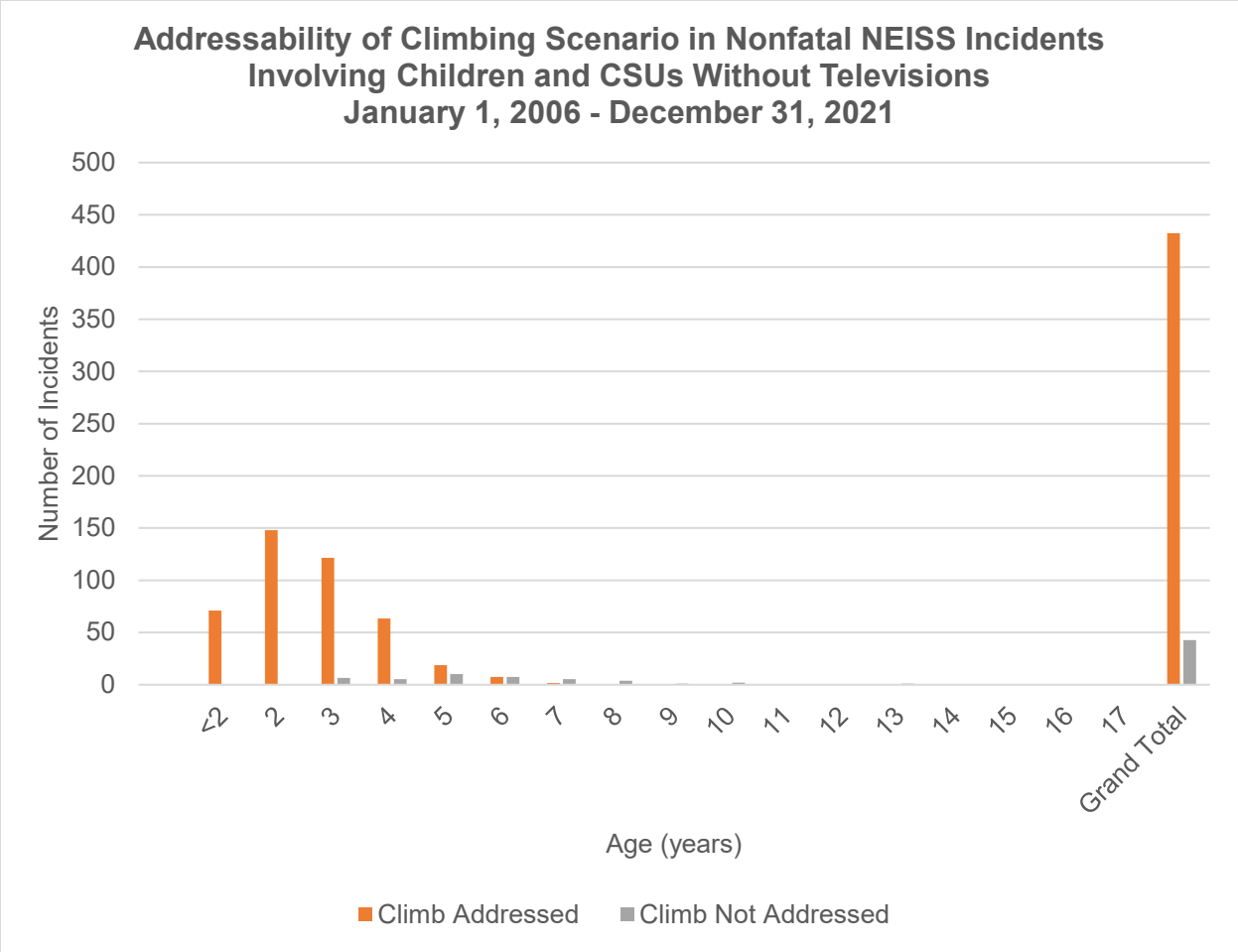

Figure 4. Addressability of climbing incidents (assuming all drawers open and filled, carpeted surface) by age in the nonfatal NEISS tip-over incidents involving children and CSUs without televisions.

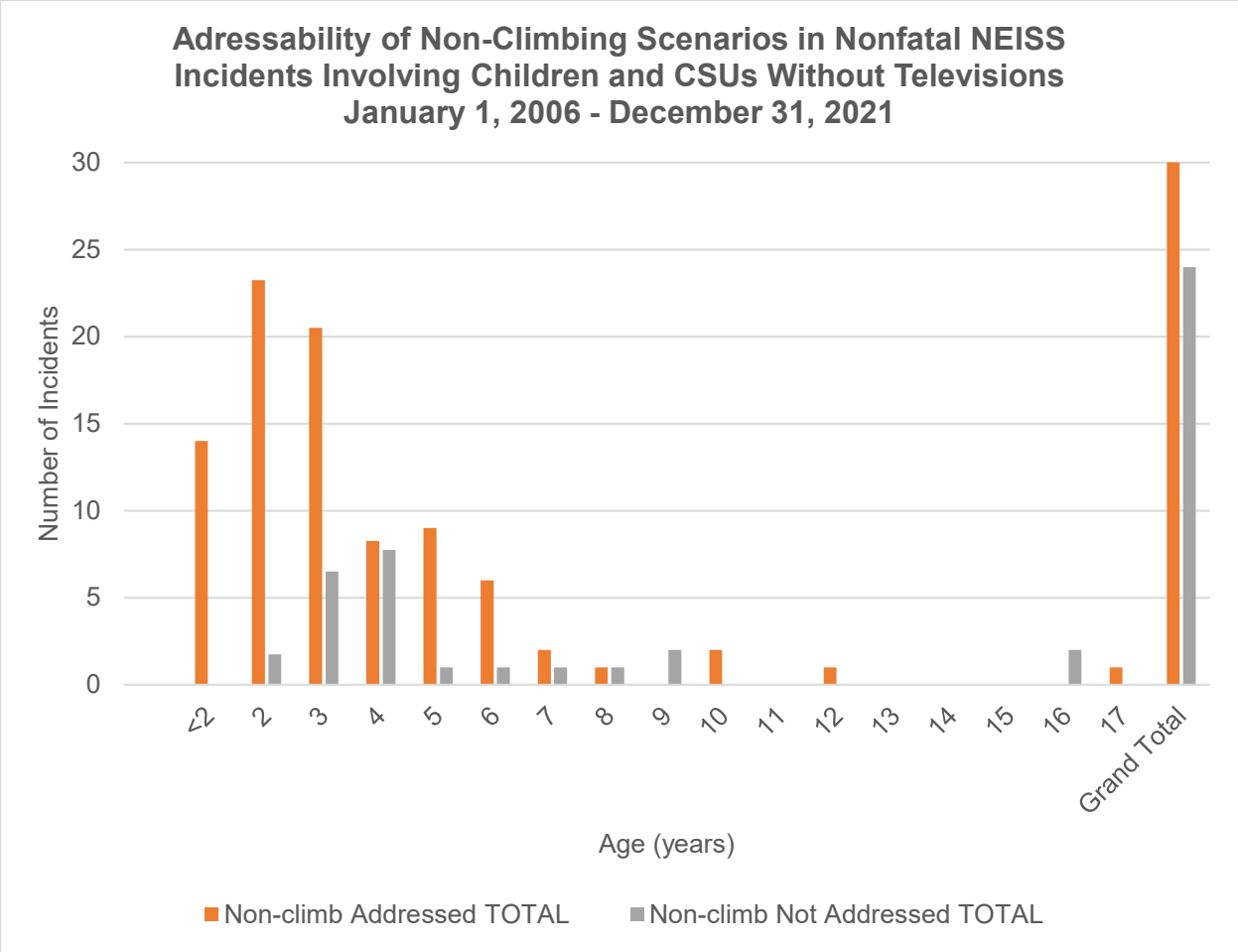

Figure 5. Addressability of incidents that were not categorized as Climbing by age in the nonfatal NEISS tip-over incidents involving children and CSUs without televisions.

6. Addressability of Fatal Incidents

As described in Table 4, staff is aware of 95 fatal incidents involving children and CSUs without televisions between January 1, 2000 and April 30, 2022. Forty-nine of these incidents had a reported interaction: 37 involved climbing, 8 involved the child in the drawer, and 4 involved opening drawers. ESHF staff conclude that all fatal incidents with a reported interaction (climbing, in drawer, opening drawers) would be addressed by the draft final rule; details by interaction are provided below.

Climbing and In Drawer

As discussed in Tab C of the NPR, the child's weight was reported for 23 of the 35 fatal incidents with climbing as the reported interaction, and ranged from 21.5 pounds to 45 pounds. For the remaining 12 climbing incidents in which the child's weight was not reported, the ESHF staff-estimated weight ranged from 23.8 pounds to 39 pounds. There were two additional climbing incidents in the new data, one involved a 31-pound 22-month-old child, and the other involved a 29-pound 2-year-old child. All of the children in these fatal incidents either had a reported weight or estimated weight under the 51.2-pound weight used in the climbing-related performance requirement moments. This means that the incident should be addressable regardless of the CSU configuration (*i.e.*, number of open drawers, drawer fill, placement on carpet).

For the in-drawer incidents, five had a reported child weight, ranging from 20 pounds to 33 pounds. For the remaining 12 climbing incidents in which the child's weight was not reported, the ESHF staff-estimated weight ranged from 23.8 pounds to 30.1 pounds. All of these weights are under the 51.2-pound weight used in the climbing-related performance requirement moments. In addition, as shown in the UMTRI study in Tab R of the NPR briefing package, interactions in the drawer are likely to generate lower moments than those from ascending; therefore, staff assumes that these scenarios are addressable.

Opening Drawers

In Tab C of the NPR briefing package, staff discussed the addressability of fatal incidents involving opening drawers, Staff concluded that all four fatal incidents would be addressed by the NPR stability requirements. In one of the incidents, the child was 11 months old and reportedly opened one drawer of the CSU. The recommended 17.2-pound pull force in the pulling-related performance requirement moment is likely to be above an 11-month-old's pull-force capabilities. Considering that the CSU in the incident had a height of 52 inches, and that the 95th percentile overhead reach of 2-year-old children is 46 inches (Pheasant, 1986), the 11-month-old victim would not have the ability to reach to the top of the incident unit. The second fatal incident involved a 2-year-old male who was assumed to have opened two drawers of a 3-drawer unit, which was partially full of clothes. Staff estimates that this incident would likely have been prevented with the proposed requirement. In the third fatal incident, a 2-year-old female reportedly opened multiple drawers of a CSU with unknown number of drawers. Staff estimates this incident would likely have been prevented with the proposed requirement. In the fourth fatality associated with opening drawers, a 5-year-old male reportedly opened multiple drawers of a CSU that was partially full. Staff believes that this incident would likely have been prevented with the proposed requirement because according to the report, when all drawers were open, the CSU became unstable and tipped over easily with a very small amount of pressure from fingertips.

7. Staff-Recommended Modifications to the Draft Final Rule

Introduction

Staff received many comments related to topics from the ESHF analysis in Tab C, and the related performance requirements in Tab G of the NPR briefing package. See Tab E for staff analysis and recommended changes related to the hang tag. ESHF staff's full response to the comments is provided in Tab K. To address issues raised in comments, staff recommends several revisions to the draft final rule. ESHF staff provide additional analysis for topics relevant to comments and recommended changes to the draft final rule, below.

Editorial Changes to Application and Definition of CSU

Staff recommends several editorial changes to the language in the "Application" section of the scope. Staff recommends deleting "in the United States, or imported, on or" to match the statutory language of CPSA section 9(g)(1), which provides that a safety standard subject to that section applies to consumer products "manufactured after the effective date." Staff also recommends deleting the definition of "consumer product" from the "Application" description and instead adding "consumer product" to the definition of a CSU. Because the definitions section includes the statutory citation for definitions in the CPSA (which includes the definition of "consumer product"), a recitation of that definition is unnecessary.

Exclusion for Certain Lightweight Units

In the NPR, staff did not propose excluding lightweight CSUs from the scope of the proposed rule. This recommendation was based on ESHF staff's assessment that consumers will perceive and use lightweight units as CSUs, and that it is possible to fill lightweight units with clothing loads that exceed the lowest product weights seen in the incident data. However, the NPR also raised the possibility of excluding from the scope of the rule certain lightweight units, highlighting the weights of units known to be involved in tip-over incidents. Accordingly, the NPR requested comments on the potential hazards associated with lightweight storage units, and on the issue of whether a weight exemption was justifiable, and whether lower weight units, including lightweight plastic units, should be excluded from the scope of the rule, and if so, the safety justification for doing so, and what the weight threshold should be and why.

Several commenters suggested that lightweight units with an empty weight of 30 pounds or less be excluded from the scope of the rule. This suggestion is consistent with a balloted change to the scope of ASTM F2057.[15] Commenters referenced data from the NPR briefing package that showed no known incidents with CSUs under 30 pounds; but commenters did not provide

[15] See Tab F for additional discussion of ASTM balloted changes.

additional data or analysis showing that CSUs under 30 pounds do not pose a risk of injury or death.

In considering these comments, ESHF staff reviewed data on the weights and reported drawer fill of CSUs involved in tip-over incidents. As discussed in the NPR briefing package, and in Tab D of this package, the lightest weight, non-modified, CSU reported in a fatal tip-over incident was a 3-drawer chest that weighed 57 pounds when empty, and was empty when it tipped over onto a 2-year-old child. A lighter, top-heavy CSU that was missing the bottom three drawers and that weighed 34 pounds (empty, without its three bottom drawers) was involved in a fatal incident involving a 2-year-old child; however, circumstances of this incident are uncertain (*e.g.*, missing drawers, unknown drawer fill), so staff is not confident in the weight of the unit at the time of the incident or able to apply factors from this incident to assessment of other, non-modified, CSUs.

In the NPR, staff discussed nonfatal incidents with 31-pound and 45-pound units.[16] Staff is now aware of additional nonfatal incidents with lighter weight units. In one incident, a 26.8-inch tall, 3-drawer chest with a package weight of 28.5 pounds tipped over onto a 13-month-old child, causing a minor bruise under their eye. There were also two incidents involving a 22.6-inch tall, 2-drawer chest with a package weight of 39.7 pounds: one in which the unit tipped over onto a 6-year-old child, causing a laceration to their cheek, and one in which the unit tipped over onto a 7-year-old, causing a laceration requiring three stiches. These incidents are summarized in Table 9. Staff also considered incidents involving plastic units, which are often lighter weight than other CSUs, such as those made of wood. Staff found two incidents involving plastic units with unknown weights or drawer fill in the NEISS nonfatal data: in one incident, a plastic dresser fell onto a 10-month-old child, hitting them on the face and head, and pinning them beneath it; the child was treated and released (NEK 110900752). In the second incident (NEK 161242041), a plastic dresser fell onto a five-year-old child and hit their face near their right eye causing laceration; the child was treated and released.

Staff assessment of the incident data demonstrate that when reported, most incidents involved partially or fully filled drawers (95 percent of fatal CPSRMS incidents and 90 percent of nonfatal CPSRMS incidents with reported drawer fill). The proportion of incidents with a reported drawer fill that reported full drawers was greater for fatal incidents (25 percent) than for nonfatal incidents (17 percent). In the NPR briefing package, ESHF staff assessed that, with an assumed clothing load of 8.5 pounds per cubic foot of functional storage volume, many lightweight units could be filled to a combined weight equaling or exceeding the weight of incident-involved units.

In response to comments, for this briefing package, staff conducted additional testing with three lightweight CSUs. ESHF staff filled the CSUs with clothing weighing 8.5 pounds per cubic foot of functional volume (see Figure 6, below). All three units were usable with this fill; staff did not observe any indications that consumers would perceive and/or interact with these lightweight units in a different way than they would with heavier CSUs. As detailed in Tab D, the testing

[16] The 31-pound CSU weight is a package weight and the 45-pound CSU weight is an empty weight.

showed that the units, which had empty weights between 16 to 25 pounds, could be filled with clothing weighing 8.5 pounds per cubic foot of functional volume to a total weight (empty CSU plus clothing fill weight) between 58 and 79 pounds. Figure 6 shows the filled condition of two of the three lightweight CSUs staff tested. Based on consumer perception and foreseeable use, ESHF staff conclude that it is necessary to consider clothing fill weight, in addition to the empty weight, when determining whether a CSU poses a risk of severe injury or death.

In Tab D of this briefing package, ESMC staff provide additional analysis of incident data for lightweight units. ESMC staff conclude that the reason that heavier CSUs pose a greater potential for injuries and for more severe injuries is that the mass/weight of the CSU is a key component in the mechanisms that cause injury or death in a CSU tip-over.

Figure 6. Sixteen-pound (empty weight) CSU filled with 8.5 pounds per cubic foot of clothing in each drawer (left); close-up of drawer of 19.2-pound (empty weight) CSU filled with 8.5 pounds per cubic foot of clothing (right).

Based on the public comments, ESHF staff analysis, and ESMC staff analysis in Tab D, ESHF staff recommends that CSUs with a combined weight—including the weight of the empty CSU and clothing fill weight of 8.5 pounds per cubic foot of function storage volume—of 57 pounds or more be included within the scope of the rule, and that those with a combined weight less than 57 pounds be excluded from the scope of the rule. As the discussion of nonfatal incidents with lightweight units above, and details in Table 9, below, indicate, nonfatal incidents involving units staff identified as lighter in weight have resulted in fairly minimal injuries, such as bruising and lacerations. As such, staff does not consider these incidents good representations of the weight of CSUs that have the potential to cause serious injuries or death in a tip-over incident, which is why the staff recommendation is based on the weight of CSUs involved in fatal incidents. Staff assess that this recommended change to scope would retain as in-scope CSUs that have or can be filled with clothing weighing 8.5 pounds per cubic foot of functional volume to a

combined weight that is demonstrated to cause death or serious injuries in tip-over incidents. Staff assesses that units that are excluded from the scope by this change are less likely to cause serious injury or death, through a combination of low empty weight and low potential fill weight.

When purchasing units for the testing detailed above, ESHF staff looked specifically for lighter weight units that were 27 inches tall or higher and that had large amounts of closed storage. Staff observed that many lighter weight units on the market were under 27 inches in height, and thus were already excluded from the scope of the draft final rule based on their height. Staff also observed in the incident data that the lightest weight units in nonfatal tip over incidents were either below 27 inches in height, or just above 27 inches in height. This suggests that there are only a small number of CSUs that are lightweight and will fall within the scope of the rule. The recommended exclusion of units with a combined weight less than 57 pounds will exclude additional units from the scope of the rule. Some examples of units that would probably be in scope and those that would probably be out-of-scope (based on available information about weight and drawer dimensions) are provided in Figure 7.

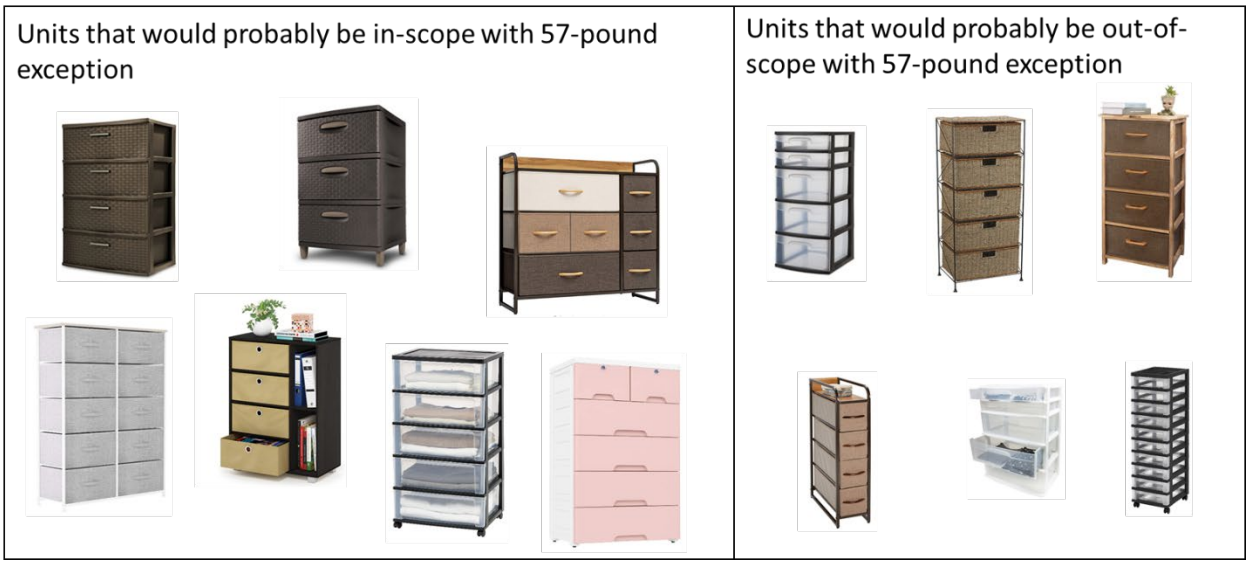

Figure 7. Examples of units that would probably be in scope (left) and those that would probably be out-of-scope (right) with a 57-pound exception.

Staff assess that this recommended change would not exclude from the scope of the rule any CSUs that were involved in fatal CPSRMS incidents, nor would it exclude any CSUs involved in nonfatal CPSRMS incidents that were not already excluded from the scope proposed in the

NPR based on height (Table 9).[17] As such, staff assesses that this recommended revision would retain within the scope of the rule CSUs that have been demonstrated to and are likely to present the risk of serious injuries or death in a tip-over incident, while excluding units that are not likely to and have not been demonstrated to present the same unreasonable risk.

Table 9. Scope Determinations for Lightest Weight CSUs Involved in Fatal and Nonfatal Incidents

Incident type	Victim age	Injury	CSU description	CSU empty weight (pounds)	CSU height (inches)	Unit in NPR scope?	Unit in draft FR scope?
Fatal	2 years	death	5-drawer (3 bottom drawers missing)	34 (without 3 bottom drawers)	42	yes	yes
	2 years	death	3-drawer	57 (empty at time of incident)	27.5	yes	yes
	18 months	death	4-drawer wicker	57.5	39.5	yes	yes
	11 months	death*	4-drawer	66.5	33	yes	yes
	23 months	death	3-drawer	68	30.8	yes	yes
	2 years	death	Same as above	68	30.8	yes	yes
	2 years	death	Same as above	68	30.8	yes	yes
Nonfatal	13 months	Minor bruise under eye	3-drawer chest	28.5†	26.8	no	no
	13 months	Bruising to both legs	2-drawer chest	31†	26	no	no
	16 months	A few scratches and bruises	Same as above	31†	26	no	no
	6 years	Laceration to cheek	2-drawer chest	39.7†	22.6	no	no
	7 years	Laceration requiring three stiches	Same as above	39.7†	22.6	no	no
	3 years	Laceration to top of foot and a bruise to calf	3-drawer chest	45	28.1	yes	yes

* NOTE: This incident was included in the NPR data set, but was not explicitly mentioned in the weight analysis in Tab C of the NPR briefing package.
† Package weight (combined weight of the CSU and packing material, as listed on the manufacturer's website). Staff did not have access to information on the weight of the CSU alone.

[17] Staff base their assessment on the available information, including reported product weights, identification, descriptions, and pictures. Staff does not have details on all incident-involved units.

ESHF staff concludes that a weight-based exemption for units with a combined weight (weight of the empty CSU plus the clothing fill weight) less than 57 pounds is reasonable.

Clarification in the Definition for Drawer

Staff recommends clarifying the definition of "drawer" in the draft final rule. In the NPR, drawer was defined as a "furniture component intended to contain or store items that slides horizontally in and out of the furniture case and may be attached to the case by some means, such as glides." As the use of "may" in this definition indicates, drawers can include features that are attached to the case of the CSU *(e.g.*, by glides), but can also include features that are not attached to the case of the CSU. CPSC received comments on this definition. One major manufacturer stated that the drawer definition should include the words "rigid, solid, and enclosed" and exempt "bins." ESHF staff address why they disagree with adding "rigid, solid, and enclosed" to the definition in their response in Tab K. However, ESHF staff agree that the rule should address the difference between drawers and furniture components that are intended to contain or store items, but are not usable as extendable elements. Manufacturers may refer to these components as "bins," although staff assess that "bin" is an imprecise term that does not capture whether or not an item is usable as an extendable element. To address these comments, staff recommends clarifying the definition of "drawer" to further emphasize that it may include features that are not attached to the case of the CSU when those features are usable as an extendable element.

Staff assess that whether or not a furniture component meets the definition of a "drawer" should be based on its features and function. As the NPR indicated, the definition of "drawer" needs to include both components that are attached to the case of the CSU and components that are not attached, but that stay in the CSU sufficiently when extended to contribute to instability. An extended drawer contributes to CSU instability by shifting the center of gravity of the CSU forward; this effect increases when the drawer is filled with clothing. Components that fall out of the case when extended will not shift the center of gravity of the CSU forward because once the component falls out of the case, it is no longer part of the CSU system and forces on it will be independent of the CSU.

One way to capture both attached and unattached components that can contribute to instability is provided in ANSI/BIFMA X6.5-2022, Home Office and Occasional-Use Desk, Table and Storage Products, which includes in the definition of "extendible element," "[e]xtendible elements have an outstop OR will remain in the drawer case/cabinet (in its normal use position) when it is extended up to ⅔ of its depth." Figure 8 illustrates an assessment of one of the lightweight units described above, using this ⅔ extension criterion. Staff found that the cloth drawers were retained in the unit when extended to ⅔ of their shortest internal length, which is the measurement used in the NPR for drawer depth.

Figure 8. Cloth drawer closed (left) and retained in the furniture case when extended to ⅔ of its shortest internal length (right).

By contrast, components that rest on the CSU but are not tightly fitted to the furniture case (*e.g.*, low profile wicker, cloth, and plastic containers or bins) are unlikely to remain in the furniture case when extended to ⅔ of their depth. A ⅔ extension criterion will reasonably exclude components that are not usable as extendable elements, and are unlikely to contribute to instability. The ⅔ extension criterion also aligns with the NPR definition of maximum extension, which includes, "[i]f the manufacturer does not provide a recommended use position by way of a stop, [maximum extension] is ⅔ the shortest internal length of the drawer measured from the inside face of the drawer front to the inside face of the drawer back."

ESHF staff concludes that the drawer definition should be revised to clarify that only components that are retained in the case when extended up to ⅔ the shortest internal length, when empty, are included in the definition. Staff recommends the following regulatory language for the draft final rule:

> *Drawer means a furniture component intended to contain or store items that slides horizontally in and out of the furniture case and may be attached to the case by some means, such as glides. Only components that are retained in the case when extended up to ⅔ the shortest internal length, when empty, are included in this definition.*

This change would clarify the definition of drawer, and exclude furniture components that cannot be reasonably used as drawers.

Clarification in the Definition for Freestanding Units

Part of the definition of a "CSU" is that the furniture item be "freestanding," which the NPR proposed to define as:

> *Freestanding means that the unit remains upright, without requiring attachment to the wall, when it is fully assembled and empty, with all extension elements closed. Built-in units or units intended to be permanently attached to the building structure, other than by tip restraints, are not considered freestanding. Examples of units that are intended to be permanently installed include, but are not limited to, kitchen cabinets and bathroom vanities.*

As the NPR and NPR briefing package explained, the purpose of the "freestanding" component of the CSU definition was to ensure that the rule only applied to furniture that was not permanently attached to a structure, since such built-in furniture would be unlikely to pose a tip over hazard. Examples of built-in/permanently attached items provided in the NPR were bathroom vanities and kitchen cabinets, which are typically permanently attached to walls and/or floors in a sufficiently secure manner to make it unlikely they will tip over. The NPR also explained that CSUs need to be inherently stable, rather than rely on tip restraints, because of various reasons tip restraints may not be used, installed properly, or be effective. The NPR also noted that how a manufacturer intends a product to be used/installed (*e.g.*, with tip restraints) is not determinative of whether it is a CSU because consumers will use products that function as CSUs as CSUs, regardless of marketing or manufacturer intent. As such, tip restraints and similar features, alone, would not make a unit non-freestanding.

However, one industry association requested clarification of the difference between a permanent attachment to the building structure and a tip restraint, and a major manufacturer provided comments on the "freestanding" element of the CSU definition, related to attachment to the wall, built-in closets, and the examples of units that are intended to be permanently installed. Based on these comments, staff believes some clarification of the definition of "freestanding" is necessary to ensure that it is based on how consumers are foreseeably going to install and use products and reflects the intent of the definition described above, as explained in the NPR. Based on comments received in response to the NPR, staff recommends revising the "freestanding" definition, as follows:

> *Freestanding means that the unit remains upright, without needing attachment to the wall or other upright rigid structure, when it is fully assembled and empty, with all extendable elements and doors closed. Built-in units are not considered freestanding.*

This recommended revision removes "intended to be permanently attached to the building structure, other than by tip restraints" from the definition since this was not clear to some commenters. This also adds "other upright rigid structure" for clarity. This recommended revision also removes kitchen cabinets and bathroom vanities as examples of built-in units. These examples may not be helpful because they are unlikely to be used as CSUs and are unlikely to meet the definition of a CSU because they may have insufficient closed storage to meet the CSUs definition, and do not have features or designs that make them "reasonably

expected to be used for storing clothing." This revised definition is consistent with the NPR, but is clearer since it removed language and examples that generated confusion.

Clarification in the Definitions of Open Storage and Open Space

As described in Tab C of the NPR briefing package, staff considered consumer perception and use when developing the definition for a CSU. One of the design features of a CSU that staff identified was that a CSU has more closed storage than display storage (*e.g.*, storage behind glass doors) and other open storage (*e.g.*, cubbies), and/or open space (*e.g.*, space under legs). Staff's identification of this design feature was based on staff assessment, including that based on the CSU use study focus group contractor report that was provided in Tab Q of the NPR briefing package. Findings included that consumers use CSUs for protecting clothing (*e.g.*, drawers of various sizes, and doors to keep clothing out of sight), and that glass doors are typically used to display items, so consumers do not perceive products with glass doors to be CSUs. Researchers also found that legs and the bottom of a product were features participants often considered when classifying something as a CSU. In Tab C of the NPR briefing package, staff also discussed hybrid products that combine features of CSUs with features of other product categories (*e.g.*, bookshelf storage products with shelving and closed storage behind drawers or doors; desks or tables with large amounts of attached closed storage).

In order to exclude products that are not reasonably likely to be used as CSUs or present the same tip-over hazard, based on their design, the NPR definition of CSU included the criterion, "total closed storage functional volume greater than 1.3 cubic feet and greater than the sum of the open storage functional volume and the open space volume." The NPR defined open storage as, "storage space enclosed on at least 5 sides by a frame or panel(s) and/or behind a non-opaque door and with a flat bottom surface," and defined open space as the "space enclosed within the frame or panels, but without a bottom surface. For example, under legs or between storage components, as with a vanity."

CPSC received comments from a major manufacturer concerning the definitions for open space and open storage. The commenter said that it was unclear which category would be used to define certain spaces, and suggested specific changes to the wording for both definitions. Staff did not agree with the commenter's specific proposed changes to the wording, but, based on the comment, staff agree that changes to the wording would help to clarify the definitions.

Staff recommends clarifying the "open storage" definition, as follows:

> *Open storage means space within the frame of the furniture, that is open (i.e., is not in a drawer or behind an opaque door) and that can be reasonably used for storage (e.g., has a flat bottom surface). For example, open shelf space that is not behind a door, display space behind a non-opaque door, and framed open clothing hanging space are considered open storage.*

This definition is consistent with the definition for closed storage (storage space inside a drawer and/or behind an opaque door). The added examples are based on the descriptions and examples that staff provided in the NPR briefing package (display storage (*e.g.*, storage behind glass doors) and other open storage (*e.g.*, cubbies)). Staff added "framed open clothing hanging space" to the examples based on the example provided by the commenter. Staff also moved "flat bottom surface," from part of the definition to an example, to address the comment that open storage may have a non-flat bottom surface.

Staff recommends clarifying the "open space" definition, as follows:

> *Open space means space within the frame of the furniture, but without a bottom surface. For example, open space between legs, such as with a console table, or between separated storage components, such as with a vanity or a desk, are considered open space. This definition does not include space inside the furniture case (e.g., space between a drawer and the interior sides) or any other space that is not visible to a consumer standing in front of the unit (e.g., space behind a base panel).*

This recommended definition provides additional examples, consistent with the description in the NPR, in order to clarify that open space is between legs of products such as console tables, which typically have longer legs as compared to the storage space, or between separated storage components of products such as vanities or desks, which typically have open space to accommodate a chair. Illustrations of these spaces are provided in Figure 9. The change from "under" legs to "between" legs was based on the specific wording suggested by the commenter; staff agreed that this wording more clearly expressed the intended meaning. Because the criterion in the definition of CSU is about consumer perception of a product, staff added clarification that open space does not include space that the consumer cannot see, for example space inside the furniture case, like that between a drawer and the interior sides, or any other space that is not visible to a consumer standing in front of the unit, for example, space behind a base panel.

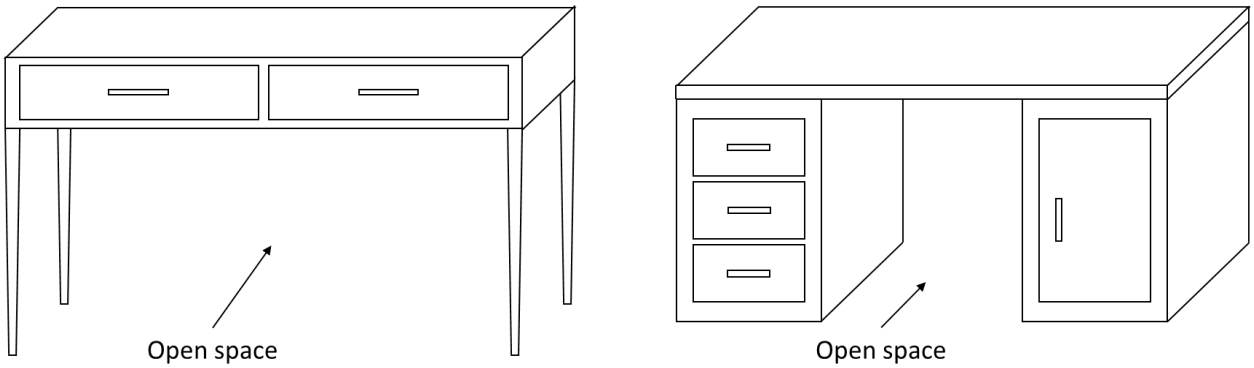

Figure 9. Illustrations of open space between legs (left) and open space between separated storage components (right).

Revision of Maximum Handhold Height Definition and Figure

In the NPR, maximum handhold height was defined as "the highest position at which a child may grab hold of the CSU. This includes the top of the CSU. This height is limited to a maximum of 4.12 feet from the ground, while the CSU is on a flat and level surface." The definition also included a reference to a figure, which showed a CSU, and a vertical arrow with the text "4.12 feet Maximum."

CPSC received a suggestion from a major manufacturer to add the criterion "a handhold feature at or below 4.12 ft" to the definition of CSU. Based on this comment, staff believe that the commenter may have misinterpreted the definition of maximum handhold height in the NPR. The maximum handhold height includes the top of the CSU, with height limited to a maximum of 4.12 feet from the ground, which is based on the overhead reach height for a 95th percentile 3-year-old male.[18] Based on the definition in the NPR, the maximum handhold height is either the height of the unit, if the unit is under 4.12 feet tall, or 4.12 feet otherwise.

Staff recommends clarifying the "maximum handhold height" definition, as follows:

> *Maximum handhold height means the highest position at which a child may grab hold of the CSU, measured while the CSU is on a hard, level, and flat test surface. For units shorter than 4.12 feet, this is the top of the CSU. For units 4.12 feet or taller, this is 4.12 feet. See Figure 5.*

Staff also recommends updating the figure to further clarify the intent, as shown in Figure 10.

[18] See Tab C of the NPR briefing package.

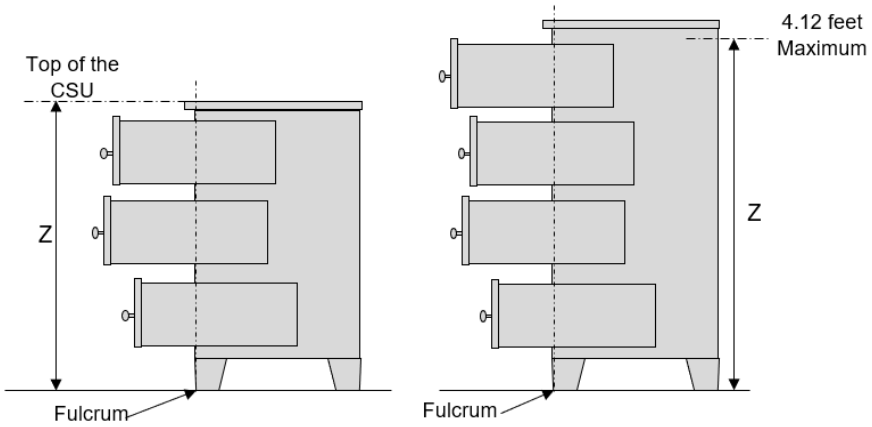

Figure 10. Recommended update to figure for *maximum handhold height*, showing a unit shorter than 4.12 feet (left), and a unit 4.12 feet or taller (right).

Revision of Child Climbing Symbol Used in the Warning Label

In the NPR, staff recommended using a warning label to inform consumers of the tip over hazard, which included a child climbing symbol that is specified in Section 8.2.4.1 of ASTM F2057 – 19. Staff also stated that two variant child climbing symbols developed under a CPSC contract with Kalsher & Associates[19] (Figure 11) were being tested for comprehension and that if one of those symbols passes the comprehension test, staff would recommend requiring one of those variants instead. CPSC asked for comments from the public on the two variants.

[19] Kalsher, M. (2019). CPSC Gather Consumer Feedback: Final Report. Contract Number HHSP233201860070A. Available at: https://www.cpsc.gov/s3fs-public/CPSC%20Gather%20Consumer%20Feedback%20-%20Final%20Report%20with%20CPSC%20Staff%20Statement%20-%20REDACTED%20and%20CLEARED.pdf?GTPK5CxkCRmftdywdDGXJyVIVq.GU2Tx.

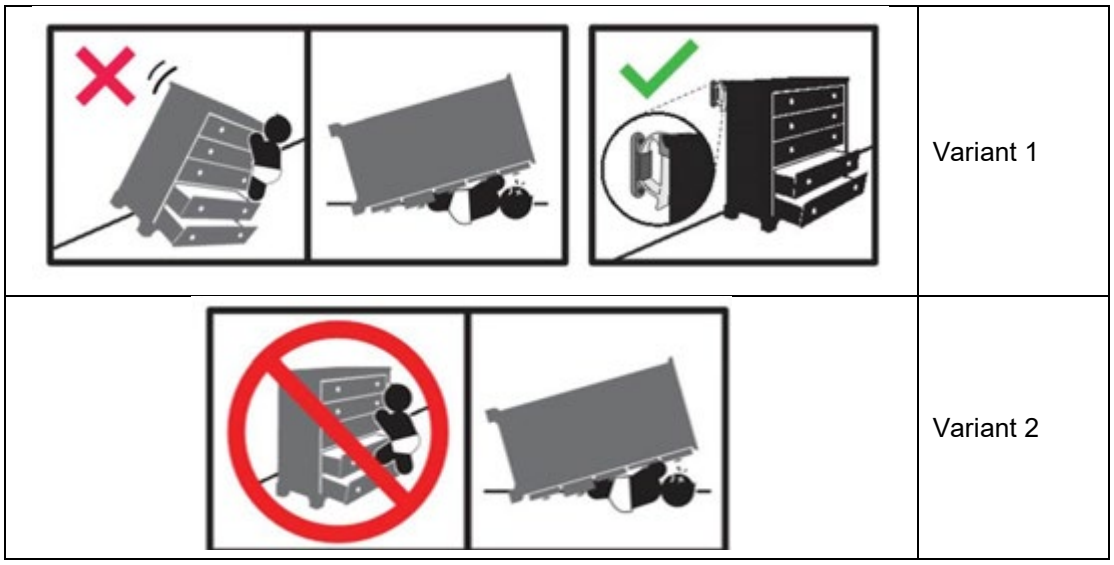

Figure 11. Two variant child climbing symbols provided in Tab C of the NPR briefing package (one showing the importance of anchoring the CSU, the other demonstrating the tip-over hazard as a result of climbing)

As described in Tab C of the NPR briefing package, Kalsher & Associates researchers evaluated 20 graphical safety symbols, including the child climbing symbol from Section 8.2.4.1 of ASTM F2057 – 19, using the open comprehension test procedures described in ANSI Z535.3, American National Standard Criteria for Safety Symbols.[20] Researchers found that that the ASTM F2057 – 19 symbol showed poor comprehension (63.8 percent) with strict (*i.e.*, fully correct) scoring criteria, but passing comprehension (87.5 percent), when scored with lenient (*i.e.*, partially correct) scoring criteria; there were no critical confusions. ANSI Z535.3 defines the criteria for "passing" as at least 85 percent correct interpretations (strict), with fewer than 5 percent critical confusions (*i.e.*, the opposite action is conveyed).

In November 2021, CPSC released a new Kalsher & Associates contractor report that showed that the Variant 1 child climbing symbol passed ANSI Z535.3 comprehension testing with both lenient (95.0%) and strict (87.5%) scoring criteria, with no critical confusions.[21] The comprehension scores for Variant 2 were lower than those for Variant 1, as well as the ASTM F2057 child climbing symbol. In the comments on the report, CPSC staff noted that the Variant 1 symbol shows a particular method of anchoring, so the effectiveness of the symbol might depend on the specific anchoring method, and how that is depicted in the symbol.

[20] American National Standards Institute. (2011). ANSI Z535.3-2011 (R2017) American National Standard Criteria for Safety Symbols. Rosslyn, VA: National Electrical Manufacturers Association.
[21] Kalsher, M. (2021). CPSC Warning Label Safety Symbol Research: Final Report. Contract Number 61320620P0038. Available at: https://www.cpsc.gov/s3fs-public/CPSC-Warning-Label-Safety-Symbol-Research-Final-Report-with-CPSC-Staff-Statement.pdf?VersionId=qCnIivtD0HRs3dEW69p.UVSDxTxvvESq.

Because Variant 1 has higher comprehension scores than the child climbing symbol from ASTM F2057 – 19, staff recommends replacing the child climbing symbol in the NPR with the Variant 1 child climbing symbol. This recommendation is also consistent with public comments, which noted a preference for the Variant 1 symbol over the Variant 2 symbol.

Based on the comment that expressed concern with the specific style anti-tip device in the third panel, and CPSC staff assessment provided with the contractor report (described above), ESHF staff also recommends allowing manufacturers to modify the third panel of the symbol (the one depicting attachment to the wall) to depict the specific anti-tip device included with the unit. This will allow firms to modify that depiction, as appropriate for the specific CSU, so that consumers will be able to more clearly understand the image. By having the anti-tip device that is included with the CSU closely match the drawing, consumers will be able to understand the function and set-up of the provided anti-tip device and its purpose by simply looking at the symbol. Examples of the staff-recommended draft final rule warning label with the Variant 1 child climbing symbol are shown in Figure 12.

In the NPR, the labeling requirements specified that the text stated in the regulation must be used for the warning label. However, for warning text that was only applicable to specific units (*i.e.*, those with interlocks and those not designed to hold a television), the NPR specified that warning text about those feature/functions (*i.e.*, interlocks, televisions) was only to be used for units with those features/functions. The primary U.S. voluntary consensus standard on product safety signs and labels, ANSI Z535.4, states that the word message should be concise and readily understood; and when detailed instructions, precautions, or consequences require a longer word message, a sign may refer the user to the proper instruction manual or other relevant information.[22] Manufacturers can use another label, instruction manual or a separate insert to provide additional information and leave the content of the required warning label restricted to the most critical information. The requirements in the NPR to use the specific text provided are consistent with this approach, as are the requirements in the NPR to exclude non-relevant warnings from products without such features/functions. This is because, to avoid consumer confusion and avoid the perception that the warnings are not relevant, features/functions that are not present on a CSU should not be mentioned in warning statements. However, CPSC received comments that suggested giving manufacturers the maximum amount of flexibility to communicate hazards that they identify within the confines of the ANSI Z535.4 format; and limiting content to only the hazards presented by the specific unit, as determined by the manufacturer. Based on comments, staff recommends clarifying that the content of the warning label shall not be modified or amended except as specifically indicated. This is consistent with what was provided in the NPR, but more explicit.

[22] American National Standards Institute. (2011). ANSI Z535.4. American national standard: Product safety signs and labels. Rosslyn, VA: National Electrical Manufacturers Association.

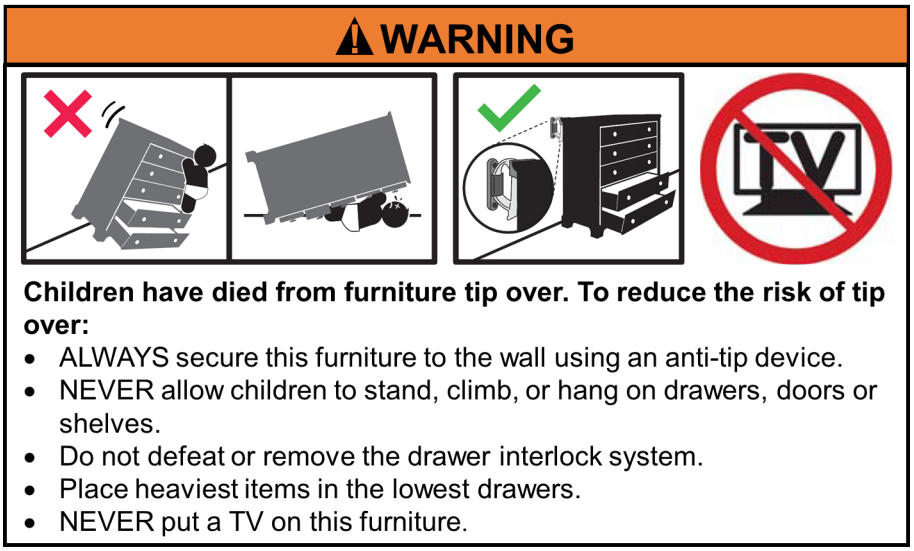

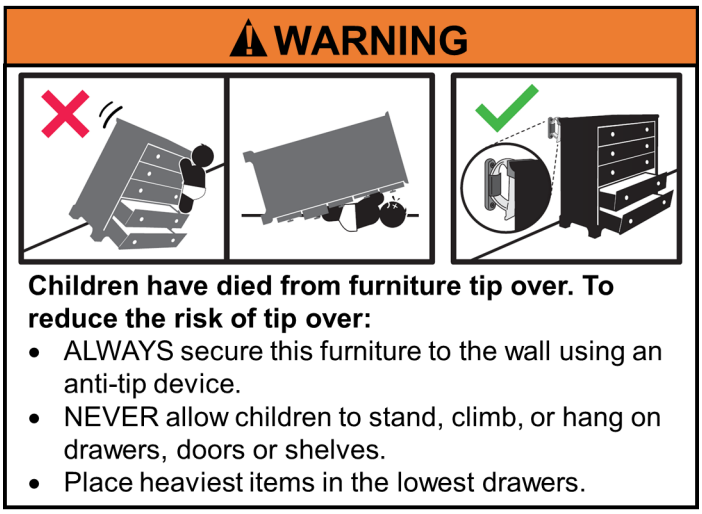

Figure 12. Example warning label for a CSU with an interlock system and not designed to hold a television (top) and for a CSU without an interlock system and designed to hold a television (bottom). NOTE: these labels are to scale.

Adding "Mark" to Identification Label

The NPR Requirements for Marking and Labeling included Identification Labeling Requirements that provided manufacturing information (*e.g.*, name and address of manufacturer, model number). These requirements referred to this as "the identification label" and incorporated by reference the permanency of labels and warnings testing in ASTM F2057 – 19 section 7.3, which provides requirements for permanency (resistance to removal) for paper labels, non-paper labels, and "warnings" applied directly to the surface of the product. As such, the NPR did not limit this "identification label" to a paper or other adhesive label.

A major manufacturer and a retailer commented that the informational label should not be limited to a label because other means of marking a CSU can be as effective and permanent as a label. This is consistent with what the NPR allowed both by using "marking" in the title of the section and by referencing requirements that allow for the information to be applied directly to the surface of the product. However, this comment indicates that clarification of this is appropriate.

In order to clarify that an identification mark is acceptable in place of a paper or non-paper label, staff recommend revising the subparagraph title from "Identification Labeling Requirements" to "Identification Marking or Labeling Requirements" and revising all references to the "identification label" to the "identification mark or label." This should clarify that the identification label in the NPR was not limited to a paper or other adhesive label, but included other ways of labeling, which may be more clearly conveyed with the term "mark." As in the NPR, the mark or label would have to conform to the applicable requirement in ASTM F2057– 19 section 7.3.

Analysis of Whether the Weight of Clothing in Drawers and Pull-out Shelves Should be Different

In the NPR briefing package, staff provided the rationale for an assumed clothing fill weight of 8.5 pounds per cubic foot of functional drawer volume; staff did not receive any substantive comments or data disputing this amount. The NPR proposed the same fill weight for pull-out shelves, but raised the possibility that the amount that can be stored in pull-out shelves may be lower than this amount because of the largely non-contained nature of a pull-out shelf and low likelihood of consumers filling up the open area in a pull-out shelf for fear of the clothes falling out. CPSC requested comment on whether pull-out shelves should be tested with the same storage density as drawers, or whether a lower fill weight for pull-out shelves would be appropriate (*e.g.*, 4.25 pounds per cubic foot). Staff received one comment on this topic, from a major manufacturer, that suggested a fill weight 4.25 pounds per cubic foot for pull-out shelves, the same fill weight as the example that staff provided in the NPR; however, the commenter did not provide any supporting data.

Staff considers it appropriate to use the same clothing fill weight for pull-out shelves as for drawers, as proposed in the NPR. Likewise, the current ASTM-balloted language uses a clothing fill weight of 8.5 pounds per cubic foot for pull-out shelves, which is consistent with the NPR requirements. However, to assess whether pull-out shelves can hold this clothing fill weight and function as intended, ESHF staff conducted additional testing to determine whether 8.5 pounds per cubic foot of functional volume is reasonable clothing fill weight for pull-out shelves. For this analysis, staff used simulated pull-out shelves using the dimensions, including width, depth, and clearance heights, of extension elements identified in typical CSUs on the market. Dimensions and volume calculations for the simulated pull-out shelves are provided in Table 10.

Table 10. Dimensions and Volume Calculations for the Simulated Pull-Out Shelves*

	Pull-out shelf 1	Pull-out shelf 2	Pull-out shelf 3
Interior width (inches)	11 3⁄8	25 1⁄2	25 1⁄2
Interior depth (inches)	17 1⁄16	17 1⁄16	17 1⁄16
Clearance height (inches)	6 3⁄4	6 3⁄4	9 1⁄2
Functional height (inches)	6 5⁄8	6 5⁄8	9 3⁄8
Functional volume (cubic feet)	0.76	1.71	2.39

*Measurements and calculations are the same as the drawers from the clothing fill testing in Tab L of the NPR briefing package.

Staff used only folded clothing for this assessment because, due to the unconstrained nature of pull-out shelves, staff assesses that consumers are less likely to use them for storing unfolded clothing. As shown in Tab L of the NPR briefing package, folded clothing is denser than unfolded clothing.[23] Staff found that all three simulated pull-out shelves could hold 8.5 pounds per cubic foot of clothing and retain the clothing during movement of the extension element. Staff also measured the height of the clothing, when filled to this volume, and compared it to the functional height provided in Table 10. Staff found that the clothing height was below the functional height, meaning that 8.5 pounds per cubic foot of clothing could fit within the functional height of the simulated pull-out shelf, allowing the pull-out shelf to function properly with that clothing fill. The clothing fill weight and clothing height for each of the simulated pull-out shelves is shown in Table 11.

Table 11. Clothing Fill Weight and Height for Simulated Pull-Out Shelves

	Pull-out shelf 1	Pull-out shelf 2	Pull-out shelf 3
Calculated clothing fill weight, assuming 8.5 pounds per cubic foot of functional volume (pounds)	6.44	14.45	20.33
Measured clothing fill weight (pounds)	6.42	14.48	20.36
Measured clothing height (inches)	6 1/4	5 3/4	7 7/8

Based on this testing, minimal comments, and consistency with ASTM's balloted approach, ESHF staff concludes that the assumed clothing fill of 8.5 pounds per cubic foot of functional

[23] Talcott, K. (2021.) Tab L: Staff Testing on the Weight of Clothing in a Filled Drawer. Staff Briefing Package: Draft Notice of Proposed Rulemaking for Clothing Storage Units. U.S. Consumer Product Safety Commission, Bethesda, MD. Available at: https://cpsc.gov/s3fs-public/Proposed%20Rule-%20Safety%20Standard%20for%20Clothing%20Storage%20Units.pdf

pull-out shelf volume is reasonable; staff does not recommend changing the fill weight for pull-out shelves from the 8.5 pounds per cubic foot used in the NPR.

8. Conclusions and Recommendations

The new data was largely consistent with that in the NPR and ESHF staff did not identify any new interaction scenarios or hazard patterns. ESHF staff analysis shows:

- Children age 3 years old or younger are the most at risk from CSU tip-over: 94% of fatal incidents, and 66% percent nonfatal NEISS tip-over incidents involving children and CSUs without televisions were 3 years old or younger.
- Incidents involved children with a range of weights. The weight of children in fatal incidents involving CSUs without televisions was as low as approximately 18 pounds and as high as approximately 58 pounds. The weight of children in nonfatal incidents involving CSUs without televisions was as low as approximately 16 pounds and as high as approximately 159 pounds.
- Climbing and opening drawers are the most common reported interactions for tip-over incidents involving children and CSUs without televisions: 76 percent of fatal and 77 percent of nonfatal NEISS incidents involved climbing; 54 percent of the nonfatal CPSRMS incidents involved opening drawers.
- For incidents with reported drawer fill level, most involved partially filled or full drawers (95 percent of fatal and 90 percent of nonfatal CPSRMS incidents involving children and CSUs without televisions).
- For the incidents where floor surface was reported, carpet was by far the most prevalent: in 81% of fatal and 74% of nonfatal CPSRMS incidents involving children and CSUs without televisions, the CSUs were on carpet.

ESHF staff calculates that 91.0 percent of nonfatal NEISS incidents involving climbing interactions, and 78.6 percent of nonfatal NEISS incidents that did not involve climbing are likely to be addressed with the recommended test procedure. Staff notes that these numbers are low estimates, because staff assumed that all climbing incidents occurred with all open and filled drawers on CSUs located on a carpeted surface, and that all opening drawer incidents involved 17.2 pounds of pull force.

Overall, under these assumptions, staff estimates that 83.9 percent of the known interactions in nonfatal NEISS incidents are addressable with the draft final rule. Staff also assess that all fatal incidents with a reported interaction (climbing, in drawer, opening drawers) would be addressed by the draft final rule.

Based on public comments, and the additional analysis provided above, staff recommend the following human factors-related changes for the draft final rule:

- Make editorial changes to the "Application" section of the scope and the definition of CSU to align with statutory language.
- Amend the definition of CSU to include only units with a mass greater than or equal to 57 pounds when all extension elements (drawer(s) and/or or pull-out shelf/shelves) are filled with a clothing-representative load.
- Amend the definition of drawer to include only components that are retained in the case when extended up to ⅔ the shortest internal length, when empty.
- Revise the definition of freestanding to: "remains upright, without requiring attachment to the wall or other upright rigid structure, when it is fully assembled and empty, and in its use position, with all extension elements closed." Remove the explanation that units intended to be permanently attached to the building structure, other than by tip restraints, are not considered freestanding. Remove the kitchen cabinets and bathroom vanities as examples of units that are intended to be permanently installed.
- Revise the definition of open storage to: "space within the frame of the furniture, that is open (*i.e.*, is not in a drawer or behind an opaque door) and that can be reasonably used for storage (*e.g.*, has a flat bottom surface). For example, open shelf space that is not behind a door, display space behind a non-opaque door, and framed open clothing hanging space are considered open storage."
- Revise the definition of open space to: "space within the frame of the furniture, but without a bottom surface. For example, open space between legs, such as with a console table, or between separated storage components, such as with a vanity or a desk are considered open space. This definition does not include space inside the furniture case (*e.g.*, space between a drawer and the interior sides) or any other space that is not visible to a consumer standing in front of the unit (*e.g.*, space behind a base panel)."
- Revise the definition of maximum handhold height to: "Maximum handhold height means the highest position at which a child may grab hold of the CSU, measured while the CSU is on a hard, level, and flat test surface. For units shorter than 4.12 feet, this is the top of the CSU. For units 4.12 feet or taller, this is 4.12 feet. See Figure 5." Revise figure to clarify definition.
- In the warning label requirements, replace the child climbing symbol from ASTM F2057-19 with the three-panel child climbing symbol from the CPSC contractor report, shown below. Allow modification of the third panel (the one depicting attachment to the wall) to show a specific anti-tip device included with the unit, and add a requirement that the content of the warning label cannot be modified or amended except as specifically indicated.

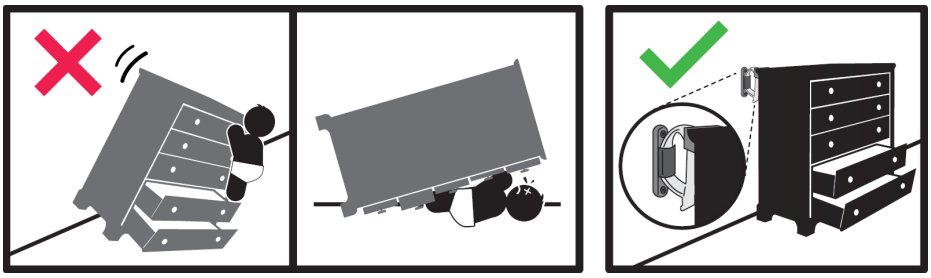

Figure 13. Three panel child climbing symbol.

- In the identification labeling requirements, revise the subparagraph title to “Identification Marking or Labeling Requirements” and revise all references to the “identification label” to the “identification mark or label.”

Staff considered a change to the assumed clothing fill weight for pull-out shelves, but concludes, based on the additional analysis provided above, that the weight used in the NPR is reasonable.

Staff also received human factors-related comments on the hang tag; ESHF staff analysis and recommended changes for the hang tag are provided in Tab E.

This page intentionally left blank.

TAB D: Mechanical Evaluation of Clothing Storage Unit (CSU) Tip-Over Public Comments and Changes to the Draft Final Rule for CSU Inherent Stability

This page intentionally left blank.

United States
Consumer Product Safety Commission

Memorandum

TO: Kristen Talcott, Ph.D., Furniture Tip-Over Project Manager, Division of Human Factors, Directorate for Engineering Sciences

DATE: September 28, 2022

THROUGH: Mark Kumagai, P.E., Associate Executive Director, Directorate for Engineering Sciences

Caroleene Paul, Director, Division of Mechanical and Combustion Engineering Directorate for Engineering Sciences

FROM: Daniel Taxier, Mechanical Engineer, Division of Mechanical and Combustion Engineering Directorate for Engineering Sciences

SUBJECT: Mechanical Evaluation of Clothing Storage Unit (CSU) Tip-Over Public Comments and Changes to the Draft Final Rule for CSU Inherent Stability

---

Introduction

Clothing storage units, or CSUs, are freestanding furniture items with drawers and/or doors, that may be reasonably expected to be used for storing clothing (see full definition in Tab G). Examples of typical CSUs are shown in Figure 1. Common examples of CSUs include: dressers, chests of drawers, and armoires. CPSC staff is aware of 234 reported fatalities associated with CSU tip-over and instability which were reported to have occurred between January 1, 2000 and April 30, 2022 (see Tab A). Of these reported fatalities, 199 involved children under 18 years old, 11 involved adults ages 18 through 64 years, and 24 involved seniors ages 65 years and older. The number of CSU tip-over incidents each year, and the resulting number of injuries and deaths, can be reduced by improving the inherent stability of the products.

U.S. Consumer Product Safety Commission
4330 East-West Highway
Bethesda, MD 20814

National Product Testing & Evaluation Center
5 Research Place
Rockville, MD 20850

cpsc.gov

Figure 1. Example clothing storage units (CSU). Most CSUs have drawers; CSUs can also have doors, shelves, or other elements.

CPSC staff reviewed the current voluntary standard for CSUs, ASTM F2057 – 19 *Standard Safety Specification for Clothing Storage Units*, and concluded that it does not adequately address the stability of these products because the voluntary standard relies only on a static load to address a child standing or hanging on a drawer front, and does not adequately account for other common hazard patterns that lead to tip-over incidents such as children interacting with or climbing on CSUs (see Tab F). Other common hazard patterns related to CSU tip overs are multiple open drawers, filled drawers, and the placement of the product on carpeted surfaces.

The Commission's Notice of Proposed Rulemaking (NPR)[1] proposed requirements that account for real-world use conditions and interactions with CSUs, as follows:

- Multiple open drawers and pull-out shelves (extendable elements);
- Filled and unfilled extendable elements;
- Carpeted floor surfaces;
- Dynamic forces from a 51.2 pound (*i.e.*, 95th percentile 3-year-old) or lighter-weight child, climbing/ascending and other interactions; and
- A child pulling on the top handhold that is within a 3-year-old child's reach.

[1] CPSC Staff. (2021.) Staff Briefing Package: Draft Notice of Proposed Rulemaking for Clothing Storage Units. U.S. Consumer Product Safety Commission, Bethesda, MD. Available at: https://cpsc.gov/s3fs-public/Proposed%20Rule-%20Safety%20Standard%20for%20Clothing%20Storage%20Units.pdf.

Based on public comments to the NPR, CPSC's Directorate for Engineering Sciences, Division of Mechanical and Combustion Engineering (ESMC) staff recommends changes to the definitions and requirements for the draft final rule. The changes will:

- Clarify that the rule applies to CSUs that are designed be configured to 27 inches in height or greater, and does not apply to CSUs that cannot be filled to weigh 57 pounds or more with loading of 8.5 pounds per cubic foot of functional volume.
- Clarify the definition of "fulcrum" related measurements to provide greater consistency of distance measurements in the stability test.
- Replace the 1.5° forward tilt angle test condition with the use of a test block(s) at the rear of the CSU that is at least 0.43 inches thick, for greater test consistency and ease of use. A 0.43-inch test block also simulates the effect of carpet and the range of angles discussed in the NPR.
- Revise the definition of "tip over" to align with definitions in the voluntary standards and to allow CSUs to benefit from a greater range of design features which enhance stability.
- Clarify that interlocks can interact with extendable elements and doors, and revise the interlock test for greater test consistency and to allow additional interlock designs.
- Clarify placement orientation of the CSU on the test surface to avoid overestimates of stability.
- Remove the allowance to level the CSU per instructions for a carpeted surface to ensure more consistent results and reflect consumer use.
- Clarify the fill density and position of the fill weight to improve the tester's ability to assess compliance with the rule.
- Require Test Method 1 to be conducted with weights for greater consistency of measurements, and clarify which CSUs should be evaluated using Test Method 1 to better reflect the test method's limits.
- Limit the use of Test Method 2's to CSUs not already addressed by Test Method 1 to reduce variability, and allow the test to be conducted with a horizontal force by the means that the test laboratory determines is most appropriate for each CSU.
- Revise the language for potential repairs to allow appropriate component repairs and replacements to complete the test.

Staff also recommends editorial changes that will improve readability, fix typographical errors, and remove redundant language.

Staff-Recommended Modifications to the Draft Final Rule

Introduction to Recommended Modifications

ESMC staff assessed comments related to the requirements for interlocks and the requirements for stability, as well as definitions for terms used in those requirements. Tab K of this briefing package includes a detailed review of comments submitted on the NPR and staff's responses to them.

Many public comments referenced ASTM's work on the voluntary standard. In the November 2021 ASTM F15.42 Furniture Subcommittee meeting, members initiated discussion on potential new stability requirements for the ASTM F2057 voluntary standard, including: revising the all drawer open test to include filled drawers, raising the test weight from 50 pounds to 60 pounds, conducting the test with the CSU angled to simulate the effect of carpet, and adding a pull test. In the subsequent months, ASTM members continued refining the language and technical details; this activity occurred in the same time frame as CPSC staff's NPR briefing to the Commission (December 2021), the Commission's vote to approve publication of the NPR (January 2022), publication of the NPR in the *Federal Register* (February 2022), the oral comment hearing (April 2022), and the written public comment period (February - April 2022). The bulk of the ASTM-proposed changes were balloted in early May 2022 (Items 1-8 in F15(22-06)). Additional changes were balloted in late May 2022 (Item 1 in F15(22-07)), and July 2022 (Items 1-8 in F15(22-11)). Although ASTM has not published an updated standard, staff considered the balloted changes to the standard while reviewing and assessing public comments. See TAB F of this briefing package for additional information about the ASTM standard and update.

In response to the public comments and other findings while reviewing the NPR, staff recommends the following changes to the draft final rule.

Include Clothing Storage Units Designed to Be Configured to Greater Than, or Equal to, 27 Inches in Height

The definition of a "CSU" in the NPR includes that the unit be 27 inches tall or greater. This is consistent with the shortest CSU identified in a fatal tip-over incident, the height limit in ASTM F2057 – 19, focus group results discussed in the NPR briefing package, and the average shoulder height of a 2-year-old child (Tab C of the NPR briefing package[2]). Staff is aware that

[2] Balci-Sinha, R., Talcott, K. (2021.) Tab C: Human Factors Assessment of the Clothing Storage Unit (CSU) Incidents, Research, and Child Physical and Behavioral Characteristics to Develop Recommendations for the Proposed Rule. Staff Briefing Package: Draft Notice of Proposed Rulemaking for Clothing Storage Units. U.S. Consumer Product Safety Commission, Bethesda, MD. Available

some units are designed such that the height can be adjusted from below 27 inches to 27 inches or greater (such as by adjusting levelers or glides); therefore, these units should be included in the definition of CSUs for consistency with the NPR proposal that a 27 inch height is an appropriate criterion for defining CSUs. Staff reviewed comments related to adjusting levelers, which also informs this scope. Additionally, ASTM has balloted requirements related to measuring these units, and ANSI BIFMA X6.5-2022 includes instructions for adjusting glides in its furniture stability tests. To ensure that any units 27 inches or greater in height are addressed, staff recommends clarifying that products designed to be adjusted to a height of 27 inches or greater be defined as CSUs for the draft final rule.

Exclude Lightweight Units that Cannot be Filled to 57 Pounds or More

In the NPR, the Commission raised the possibility of excluding lighter weight CSUs from the scope of the rule, but did not propose such an exclusion. The NPR explained that the lightest weight CSU involved in a fatal tip-over incident without a television was 34 pounds, but the product was a top-heavy CSU that was missing the bottom three drawers. The circumstances of this incident are uncertain (*e.g.*, missing drawers, unknown drawer fill), so staff is not confident in the weight of the unit at the time of the incident or able to apply factors from this incident to assessment of other, non-modified, CSUs. The NPR also explained that the second lightest weight CSU involved in a fatal tip-over incident without a television was 57 pounds. This CSU was not modified at the time of the incident and was reported as empty, making the total weight at the time of the incident 57 pounds. The NPR also noted that lighter weight units—as light as 31 and 45 pounds—were involved in nonfatal tip-over incidents.

In response to the NPR, several commenters requested that lightweight units weighing less than 30 pounds be excluded from the rule. These commenters noted that there were no known incidents involving such lightweight units and that lighter weight units would not be able to meet the stability requirements in the proposed rule.

Staff recognizes that lighter weight CSUs may pose less of a risk of serious injury and death in a tip-over incident than heavier weight units. In Tab B, Health Sciences staff identified head injuries, compressional and mechanical asphyxia, and strangulation as the leading cause of injuries in CSU tip-over incidents. The mass (or weight) of the CSU is one key factor that contributes to these injuries because higher mass CSUs create greater impact forces and compressional forces, thereby increasing the risk and severity of injuries (NPR briefing package, Tab B[3]). High mass CSUs also make self-rescue more difficult because children are less likely to be able to move the fallen CSU or get out from under it (NPR briefing package, Tab B).

---

at: https://cpsc.gov/s3fs-public/Proposed%20Rule-%20Safety%20Standard%20for%20Clothing%20Storage%20Units.pdf

[3] Wanna-Nakamura, S. (2021.) Tab B: Health Sciences Staff Review of Fatal and Nonfatal Incidents Associated with Clothing Storage Unit Tip Overs Involving Children. Staff Briefing Package: Draft Notice of Proposed Rulemaking for Clothing Storage Units. U.S. Consumer Product Safety Commission, Bethesda, MD. Available at: https://cpsc.gov/s3fs-public/Proposed%20Rule-%20Safety%20Standard%20for%20Clothing%20Storage%20Units.pdf

CPSC's incident data did not identify any fatal CSU tip-over incidents that involved lightweight units less than 34 pounds when empty.

As commenters mentioned, and staff confirmed, many lighter weight units that are less than 30 pounds do not meet the stability requirements in the draft rule. Thus, without an exclusion for lighter weight units, such units may be prohibited, even though staff assesses that they pose less risk of serious injury and death in a tip-over incident. For these reasons, staff considered what weight limit would capture CSUs that are heavy enough to present an unreasonable risk of injury during a tip-over incident, while excluding lighter weight units that are unlikely to pose the same hazard. To identify an appropriate weight limit for CSUs, ES staff reexamined the incident data where the CSU weights were reported or where staff could determine the weight of the CSUs based on product information or other data sources. Table 1 shows the lightest weight CSUs involved in fatal incidents.

Table 1. Lightest Weight CSUs Involved in Fatal Incidents

Incident	Fatal IDI	CSU	CSU empty weight (lbs)	Victim age	Incident
1	130314HNE0001	5-drawer (3 bottom drawers missing)	34 (minimal clothing in drawers at time of incident)	2-years (fatal) 4- years (not injured)	Two siblings were found under the CSU. The 2-year old victim was face down. His head and shoulders were not covered by the CSU.
2	180423CCC1630	3-drawer	57 (empty at time of incident)	2-years	Toddler was laying on her back with the CSU on top of her neck between the CSU drawers.
3	010802HNE6619	4-drawer wicker	57.4	18 months	Victim lying on his back. Victim's head, neck and upper chest area were the only parts of his body that were not under the CSU.
4	110502CCC3680	4-drawer	66.5	11 months	Victim found under the CSU; cause of death ruled asphyxia due to mechanical compression of the chest.
5	140620CBB3661	3-drawer	68	23 months	Victim slumped over halfway in the drawer
6	170802HFE0001	Same as above	68	2-years	Head in drawer - asphyxia due to mechanical compression of the neck
7	120206HCC1395	Same as above	68	2-years	Neck entrapment between drawers

Upon further review of Incident 1, which was highlighted in the NPR, the configuration of that CSU at the time of the incident (*e.g.*, missing drawers, contents of drawers) is not clear. As such, staff cannot reliably determine the weight of the unit at the time of the incident. The IDI for Incident 1 indicated that after the victim died, the Coroner and Deputy Coroner visited the residence. They observed that 2 of the incident's dresser drawers were in another room and one drawer was "disassembled" in the victim's room. The remaining two drawers of the 5-drawer dresser were installed in the top positions. The dresser with 2 drawers weighed 34 pounds. The Coroner did not weigh the other three drawers. Based on the IDI, staff cannot determine if all the drawers were installed before falling onto the victims and then moved out of the way after the incident, or if the drawers were removed before the incident. Due to the unknown condition of the dresser at the time of the incidents, ES staff cannot rely on the weight reported in the IDI and therefore did not use this incident for its analysis.

As the NPR explained, the second lightest weight CSU involved in a fatal tip-over incident without a television was 57 pounds (Incident 2 in the table above). This CSU was not modified at the time of the incident and was reportedly empty, making the total weight at the time of the incident 57 pounds. As the table shows, all of the other fatal incidents involving a lighter weight CSU were heavier than 57 pounds, whether empty or full, including a 57.4-pound CSU, a 66.5 pound CSU, and three incidents involving a 3-drawer unit that weighed 68 pounds empty. Excluding Incident 1, three victims were found with the CSU on the victim's neck, and three victims were found with the CSU compressing the chest or waist. The mechanism for these injuries is the CSU weight pressing against the victim's body. The mechanism of these injuries and the weights of the CSUs provide further indication that the weight/mass of a CSU is a key factor in the potential occurrence and severity of injuries in a CSU tip over and that it is, therefore, reasonable to account for CSU weight in determining the applicability of the draft rule.

The NPR also noted that lighter weight units—as light as 31 and 45 pounds—were involved in nonfatal tip-over incidents.[4] Staff are also aware of additional nonfatal incidents involving units that weigh from 28.5 pounds to 39.7 pounds empty.[5] However, these units would not be included in the scope of the draft rule because they were less than 27 inches in height. In addition, as listed in Table 9 of Tab C, the injuries caused by all of these units weighing 28.5 pounds to 45 pounds were fairly minimal, including only bruising or lacerations. As such, staff does not consider these incidents good representations of the weight of CSUs that have the potential to cause serious injuries or death in a tip-over incident. See Tab C for more information on these products and injuries.

ESHF staff in Tab C also identified two incidents involving plastic units in the NEISS nonfatal data. Staff considered these incidents as well because plastic units are likely to be lighter in weight. In one incident, a plastic dresser fell onto a 10-month-old child, hitting them on the face and head, and pinning them beneath it; the child was diagnosed with an unspecified head injury, and was treated and released (indicating the head injury was likely not serious). In the second

[4] The weight of the 31 pound unit is a package weight, while the weight of the 45 pound unit is an empty weight. Package weight includes packing material; the unit itself may weigh less.
[5] As noted by ESHF staff in Tab C, some of these weights are package weight.

incident, a plastic dresser fell onto a 5-year-old child and hit their face near their right eye causing laceration; the child was treated and released. The weight of these units was not described, but based on the plastic material, they are likely in the lightweight category. Again, because of the apparently relatively minor injuries resulting from these incidents, staff would not have considered the weights of these units to be good representations of the weight of CSU capable of causing serious injuries either.

Based on this analysis, staff determined that 57 pounds is the lowest total weight demonstrated in the incident data to have the potential to cause serious injuries or death in a tip-over incident. As the data shows, the lightest weight unit involved in a fatal incident weighed 57 pounds; other units weighing just over 57 pounds were also involved in fatal incidents.

Having identified an appropriate total weight at which to establish a threshold for the draft final rule, staff also considered how to determine the total weight. As noted in Table 1, the 57-pound CSU involved in a CSU tip-over incident was empty at the time of the incident. Thus, its total weight at the time of the incident was 57 pounds. However, as the NPR and Tab C of this briefing package explained, for CSU tip-over incidents with a reported drawer fill, most involve partially or fully filled drawers, and this use is expected because CSUs are intended to store clothing. As explained in Tab C, staff conclude it is necessary to consider clothing fill weight, in addition to the empty weight of the CSU, when determining whether it poses a risk of severe injury or death. As explained above, the reason heavier CSUs pose a greater potential for injuries and for more severe injuries is that the mass/weight of the CSU is a key component in the mechanisms that cause injury or death in a CSU tip-over. As described above, the fatal incidents involving the lightest CSUs are caused by the total weight—the CSU and its contents—compressing the child's neck, chest, or midsection with 57 pounds or more. As such, the total mass/weight of the CSU—including both the unit and its contents—needs to be the considered weight, rather than only the empty weight of the CSU. Therefore, in identifying a threshold weight for the draft final rule, staff determined that the weight must account for both the weight of the CSU and expected clothing fill weight since clothing fill weight, if present, would contribute to the potential for and severity of injury.

As described above, the fatal incidents involving the lightest CSUs are caused by the total weight – the CSU and its contents – compressing the child's neck, chest, or midsection with 57 pounds or more. Staff therefore conducted further evaluation of whether lightweight units could reach 57 pounds when filled. Because commenters recommended a weight minimum of 30 pounds, staff evaluated whether CSUs weighing less than 30 pounds could be filled with sufficient weight to total 57 pounds or more. ES staff evaluated three light weight units, shown in Table 2. Each of these CSUs was taller than 27 inches and weighed less than 30 pounds empty (16 pounds to 25 pounds), and though a convenience sample, are representative of a variety of lightweight units (*e.g.*, number of drawers, configurations, materials) that would be excluded from the rule if the Commission accepted the commenters' request to exclude lightweight units weighing less than 30 pounds. For this assessment, staff used the fill density by functional volume calculation in the NPR. As described in the NPR, this fill density—8.5 pounds per cubic foot of functional volume— is a reasonable approximation of the weight of

clothing in a fully filled drawer.[6] In Tab C of this briefing package, staff affirm that this fill density is also reasonable for pull-out shelves. As such, this is an appropriate way to determine the potential filled weight of a CSU because it accounts for a reasonable clothing fill weight. The justification for this calculation is provided in detail in the NPR and supporting briefing package. When filled with 8.5 pounds per cubic foot of functional closed storage volume per the NPR, each of the tested CSUs weighed more than 57 pounds (58 pounds to 79 pounds).

Table 2. Lightweight CSU Testing

Unit Picture	Overall weight and Dimensions	Calculated Drawer Fill Weight (8.5 lbs./cu ft)	Total Weight
	Sample X. 6-drawer plastic CSU. Dimensions (inches): 33 ¾ wide x 48 high x 15 ½ deep. Empty weight: 16.0 lbs.	8.9 lbs. per drawer 53.4 lbs. total drawer fill weight	69.5 lbs.
	Sample Y. 8-cloth drawer, metal frame, wooden top CSU. Dimensions (inches): 33 ¾ wide x 39 ½ high x15 ½ deep. Empty weight: 25.2 lbs.	6.8 lbs. per drawer 54.4 lbs. total drawer fill weight	79.6 lbs
	Sample Z. 6-drawer plastic CSU (2 small drawers and 4 large drawers). Dimensions (inches): 23 ¾ wide x 38 ¾ high x15 ¾ deep. Empty weight:19.2 lbs.	Small drawers: 3.4 lbs. per drawer 6.8 lbs. total small drawer fill weight Large drawers: 8.1 lbs. per drawer 32.5 lbs. total large drawer fill weight	58.5 lbs.

[6] See staff assessment in Tab C and Tab L of the NPR briefing package. Talcott, K. (2021.) Tab L: Staff Testing on the Weight of Clothing in a Filled Drawer. Staff Briefing Package: Draft Notice of Proposed Rulemaking for Clothing Storage Units. U.S. Consumer Product Safety Commission, Bethesda, MD. Available at: https://cpsc.gov/s3fs-public/Proposed%20Rule-%20Safety%20Standard%20for%20Clothing%20Storage%20Units.pdf

This demonstrates that units weighing 16 to 25 pounds can be filled, using the clothing fill calculation, to weigh more than 57 pounds. For each of these units, the fill weight was greater than the weight of the empty unit; approximately 31 pounds to 54 pounds of clothes could be placed in each unit. ESHF staff confirmed the calculations by filling each of the CSUs with clothing weighing 8.5 pounds per cubic foot of functional volume, as described in Tab C.

Based on staff's analysis in this memorandum and in the ESHF staff memorandum in Tab C, staff determined that lightweight units that can be filled to weigh a total of 57 pounds or more pose a risk of serious injury or death in a tip-over incident.

Based on the comments received in response to the NPR, as well as ESMC and HF staff's assessment of the hazard presented by lighter weight CSUs and incidents involving such units, staff recommends revising the definition of a CSU to specify that it includes only units that can be filled to 57 pounds or more, when using the fill density by functional volume as defined in the draft final rule. This will result in many taller and/or wider lightweight units remaining within the scope of the draft rule if they can store clothing that amounts to the threshold weight. Examples of such units are in Table 2. This will also exclude lightweight units that do not have the capacity to hold enough clothing to reach the threshold weight from the scope of the draft rule, thereby allowing such units that would otherwise have been unable to meet the draft standard to remain on the market since staff assesses that they are unlikely to pose an unreasonable risk of serious injury or death in a tip over.

Staff does not recommend following the commenter's request to set the weight threshold by the empty weight of the unit because the weight of the lightweight unit is only one component of the total weight contributing to forces generated during tip overs and resulting injuries. Storage volume is a more significant factor in determining the total weight of the filled unit. For example, Sample X in Table 2, in its current design, has six drawers, weighs 16 pounds empty, and can be filled to weigh 69.5 pounds, using the fill weight in the draft rule. However, if the design were identical, except that two rows of drawers were eliminated, making it a 4-drawer unit, the unit would weigh approximately 13.3 pounds (only 2.7 pounds less than the original unit), but the filled weight would be reduced from 69.5 pounds to 46.4 pounds. Staff also considered modifications that may allow lightweight units similar to those tested to fall outside the scope of the rule while still providing a similar purpose. Staff found that reducing either the height or width of the unit may accomplish this. For example, Sample Y in Table 2, in its current design, consists of two columns of four drawers each, weighing a total of 25.2 pounds empty and 79.6 pounds filled. If Sample Y was reduced in size by half, such that each column of four drawers was a single unit, each of those units would weigh approximately 13 pounds empty and 40 pounds when full, and would be excluded from the rule.

The NPR did not provide any exclusion for lightweight units, so the draft final rule would exclude some units that would have been covered under the NPR from the standard. However, staff does not expect the recommended revision to the definition of CSUs to have a significant effect on the number of units covered by the rule because the height limit that was proposed in the NPR as part of the CSU definition (*i.e.*, only including units greater than or equal to 27 inches in

height) remains in the draft final rule. Most lightweight units are estimated to be below 27 inches tall; the number of lightweight units that are over 27 inches in height and weigh less than 57 pounds when filled is small. Additionally, ESHF staff in Tab C showed that conventional storage chests weighing less than 57 pounds when empty are already excluded from the rule because they are generally less than 27 inches in height. ESHF staff also assessed that this change would not exclude any CSUs involved in fatal or nonfatal CPSRMS incidents that were not already out of scope based on height. The 45-pound, 28 1/8-inch tall unit involved in a nonfatal injury weighs more than 60 pounds when full, as described in Tab M[7] (Model C) of the NPR staff briefing package, and therefore, would still be included in the draft rule; other nonfatal lightweight incident units which weigh from 28.5 pounds to 39.7 pounds empty are under 27 inches in height and were already excluded from the rule. Additionally, the fatal units identified in Table 1 for which staff know the empty weight of the whole unit all weigh 57 pounds or more. No fatal or nonfatal incident-involved unit that staff is aware of and that was covered by the NPR will be excluded from the rule as a result of this change. Based on this information, staff does not expect that including only units that can be filled to 57 pounds or more will have a significant effect on the number of units covered by the rule.

Based on the available incident data and scenarios, the weight of a CSU, when filled, is a relevant factor in its potential to cause serious injuries and death when it tips over. Incident data and scenarios show that CSUs weighing 57 pounds or more, filled, have the potential to cause serious injuries and death when they tip over. Therefore, staff recommends including in the definition of a CSU that the unit must weigh 57 pounds or more when filled, using the criteria established in the NPR for determining fill volume. However, because 57 pounds represents the lightest weight unit staff is aware of that was involved in a fatal incident, staff will continue to monitor the incident data so that the weight threshold may be modified if appropriate.

Define and Use Extendable Elements for Clarity

The proposed rule included numerous requirements for “drawers and pull-out shelves” and those terms are both defined in the NPR. Several furniture-related voluntary standards use the term “extendable element” or “extendible element” to refer to drawers and pull-out shelves. Because the term “extendable element” has the same meaning as “drawers and pull-out shelves,” but is more concise and does not diminish understanding, staff recommends replacing the terms “drawer or pull-out shelves in the draft final rule with “extendable elements”. This would not change any requirements in the rule; it merely uses more concise terminology.

[7] Mella, L., Newens, A., Taxier, D. (2021.) Tab M: Mechanical Evaluation and Analytical Modeling of Incident-Involved Clothing Storage Units. Staff Briefing Package: Draft Notice of Proposed Rulemaking for Clothing Storage Units. U.S. Consumer Product Safety Commission, Bethesda, MD. Available at: https://cpsc.gov/s3fs-public/Proposed%20Rule-%20Safety%20Standard%20for%20Clothing%20Storage%20Units.pdf.

Clarify Fulcrum Definition and Related Measurements

The proposed rule defined the term "fulcrum" as follows:

> *Fulcrum means the point or line at the base of the CSU about which the CSU pivots when a* tip-over force *is applied (typically the front feet).*

The fulcrum position is used in four measurements within the stability requirements. The first is the *extendable element extension from fulcrum distance* and the second is the *door extension from fulcrum distance*. Both of these distance measurements are used to determine the threshold moment, which establishes the minimum stability requirement of the CSU. The third and fourth measurements for which the fulcrum position is used are to determine the tip-over moment in Test Methods 1 and 2, which determine whether the CSU meets the minimum stability requirement. (The tip-over moment must be greater than the threshold moment.)

CPSC received several comments relating to consistent measurements to the fulcrum. One manufacturer stated the fulcrum of the CSU may be affected by the test setup and will move during the test, and recommended evaluating the fulcrum position when tip over occurs. The same manufacturer stated it was not clear which distances to measure if a CSU had different drawers extending to different lengths. A trade association stated the measurements to the fulcrum will vary due to the difficulty of acquiring them. One manufacturer recommended specifying the distance measurement to the fulcrum be taken before the force is applied.

Staff agrees that the fulcrum position may shift forward as a CSU tilts or pivots forward during the test. For most CSUs, this positional shift is small and does not have a significant effect on measurements to the fulcrum. However, some CSUs with small glides on large legs (or similar features) may extend the fulcrum forward significantly while they are tilting forward. Depending on when certain measurements to the fulcrum are made, a forward-shifted fulcrum could either result in a smaller threshold moment (making the test easier to pass) or in a reduced moment arm for the tip-over moment (making the test more difficult to pass).

The fulcrum position should be determined before a tip-over force is applied since the fulcrum position is used as a reference point for several measurements. However, based on these comments, the NPR did not make clear when to take these fulcrum measurements. Because a lack of clarity on this could lead to potential inconsistencies in measurement, staff recommends that the fulcrum definition be revised so that it is clear at what point to determine the fulcrum and at what stage of the stability test measurements to the fulcrum are to be made.

Specifically, staff recommends clarifying in the fulcrum definition that the fulcrum position is determined while the CSU is on a hard, level, flat test surface with all doors and extendable elements closed. This establishes a clear reference that can be used at any stage of testing, making the stability test more repeatable and reproducible. In addition, staff recommends specifying in Test Method 1 and Test Method 2 that the appropriate time to record the distance measurement to the fulcrum is before the load is applied. This will also make clear that the fulcrum measurements are taken before a tip-over force is applied.

In addition, the NPR did not specify which measurement to use in the case of CSUs with extendable elements or doors with multiple extensions. However, Figure 2 in the NPR regulatory text depicts a CSU with drawers extended to different lengths, and shows the drawer extension from fulcrum distance measured to the drawer with the longest extension.

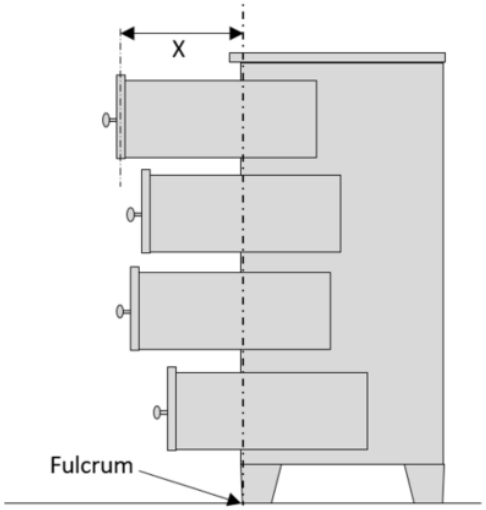

Figure 2. The *drawer extension from fulcrum distance*, illustrated by the letter X.

Figure 2. Figure 2 of the NPR demonstrates the drawer extension from fulcrum distance measured to the longest extension.

Based on the comments, users of the standard who are not looking closely at the figures may not realize that the longest distance is to be measured. Lack of clarity on this issue could also lead to potential inconsistencies in measurement.

Therefore, staff recommends adding the following step to the stability test configuration requirements, after the CSU has been leveled:

> *Record the* maximum handhold height, *and the longest* extendable element extension from fulcrum distance *and* door extension from fulcrum distance*, as applicable. These measurements are used in § 1261.4(d).*

This establishes a clear time when the appropriate measurements are to be taken, and makes clear that the longest extendable element extension from fulcrum distance is to be used, without relying solely on figures to express the intended measurement.

Replace Carpet Angle with Test Block

To replicate the effects of carpet during stability testing, the NPR proposed tilting the CSU forward 1.5 degrees by either raising the rear of the unit, placing the CSU on an inclined

surface, or using other means. In the NPR, staff had determined that 1.5 degrees was the average angle replicating the effect of carpet, with a test range of 0.8 degrees to 3.0 degrees.

CPSC received several comments on this. One commenter pointed out that an inclined surface could shift the CSU fulcrum toward the rear of the unit; several commenters suggested using a test block, rather than an incline angle, to make the test easier to conduct and aid repeatability and reproducibility. A manufacturer commented that using a 0.43 inch thick test block would be more objective than specifying an angle, as in the NPR, because the actual tilt angle of the CSU could be affected by attributes such as the unit weight or depth.

To evaluate whether a test block could achieve a comparable tilt angle to the NPR and, thereby, simulate the effect of carpet, staff determined the tilt angle that a 0.43 inch thick test block would produce on most CSUs. Staff used the depth measurements for CSUs analyzed by LSM staff in Tab N[8] of the NPR briefing package and calculated the angle that would be produced by raising the rear of the CSU 0.43 inches.[9] Staff determined that raising the rear of the CSU 0.43 inches tilted the CSU forward at an average angle of 1.5 degrees; the total range of angles produced by this test block was 1.2 degrees to 2.3 degrees. These values match the average angle of 1.5 degrees and are within the range of 0.8 degrees to 3.0 degrees that staff previously determined replicate the effect of carpet and described in the NPR. Based on this assessment, staff agrees with commenters that using a 0.43 inch test block would provide an equivalent tilt angle to that in the NPR and adequately simulate the effect of carpet. In addition, using a test block would be easier than tilting the unit forward 1.5 degrees as specified in the NPR because it is easier for a test lab to create test blocks of a specific thickness than to create multiple blocks for individual units that will raise them 1.5 degrees, or to create a test platform that angles exactly 1.5 degrees. Staff was unable to establish clear relationships between CSU attributes, such as depth or weight, and the tilt angle produced by the effect of carpet using available data. So staff cannot conclude whether the 0.43 inch test block, which creates a tilt angle dependent on the depth of the unit, is more objective than a 1.5 degree tilt angle. Both the test block and the 1.5 degree angle reliably produce angles within the range that staff has determined replicates the effect of carpet, but the test block is easier for test labs to produce. Therefore, to address comments, staff recommends requiring that the CSU be tilted forward for testing by placing a 0.43 inch thick block under the most rear floor supports. To accomplish this, staff recommends adding a definition and figure for the test block:

[8] Sanborn, M. (2021.) Tab N. FY 2018 Midyear Clothing Storage Unit Testing Program Summary. Staff Briefing Package: Draft Notice of Proposed Rulemaking for Clothing Storage Units. U.S. Consumer Product Safety Commission, Bethesda, MD. Available at: https://cpsc.gov/s3fs-public/Proposed%20Rule-%20Safety%20Standard%20for%20Clothing%20Storage%20Units.pdf

[9] Staff reduced the measured depth by 1 inch for this calculation to account for feet placement. The depth of these units was measured at the top surface, and staff estimates the feet are inset at least 1 inch total from the top, on average. Because a test block would be placed under the feet of a CSU, staff adjusted the depth measurement accordingly.

Test block means a block constructed of a rigid material such as steel or aluminum with the following minimum dimensions: at least 0.43 inch thick, at least 1 inch deep, at least 1 inch wide. See Figure 6.

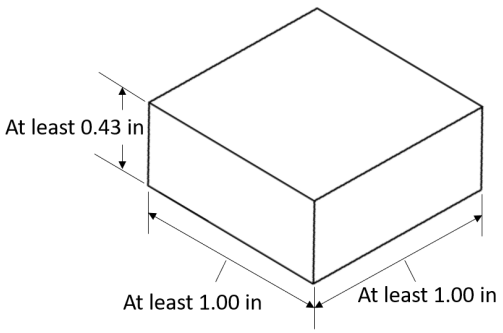

Figure 3. Recommended test block figure.

Staff also recommends updating the figures in the requirements for stability section to show the test block, as shown in Figure 4 and Figure 5.

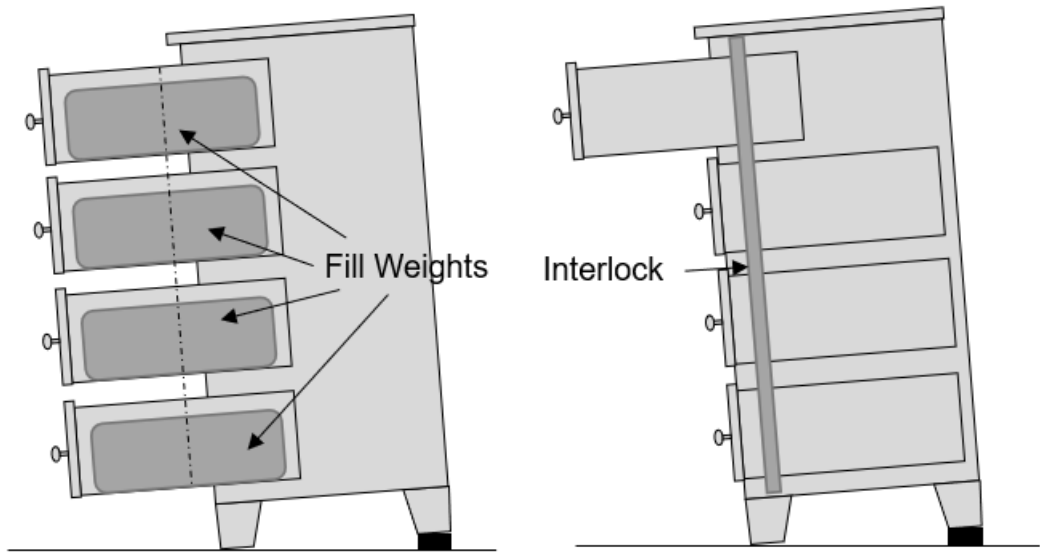

Figure 4. Recommended fill weight and interlock figures for the draft final rule, with the test block added to the figures from the NPR.

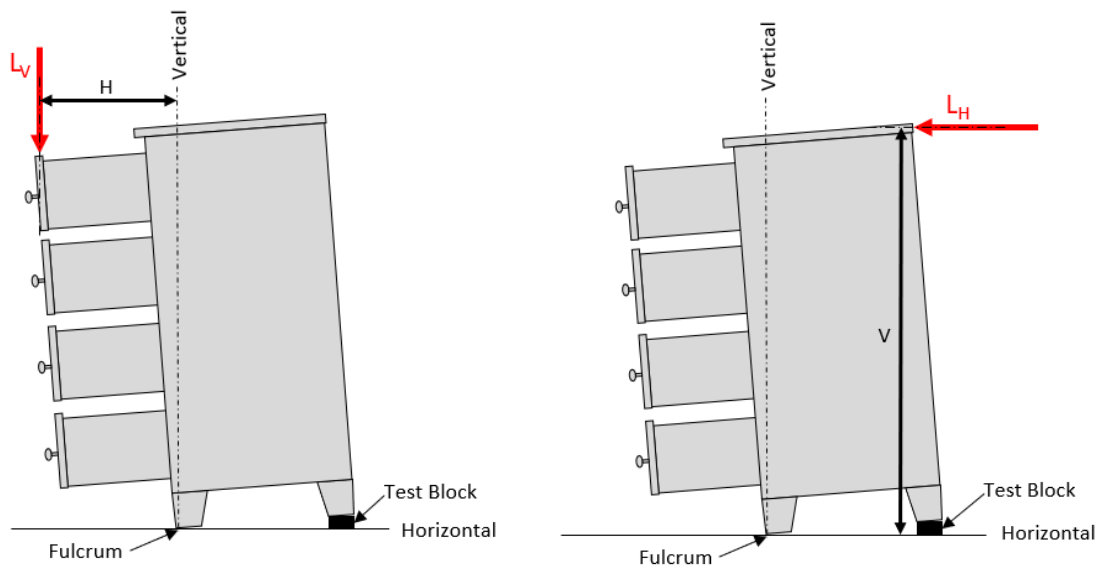

Figure 5. Recommended test method figures for the draft final rule, with the test block replacing the 1.5 degree angle that was shown in the NPR.

To ensure that a test block properly simulates the effect of carpet, the positioning of the block is important to achieve the correct angle. A block positioned too far toward the front of the CSU will increase the angle; a block positioned too far toward the rear of the CSU will decrease the angle. Therefore, to accommodate the requested change to a test block, the position of the block must be specified. For CSUs that have rear feet with glides or levelers smaller than the block, the entire glide or leveler should be over the block. Otherwise, the back of the block can be easily aligned with the back edge of the rear support.

To ensure proper placement of the test blocks, in the requirements for stability test configuration, staff recommends replacing the requirement to tilt the CSU 1.5 degrees forward with the following:

> *Tilt the unit forward by placing the* test block(s) *under the unit's most rear floor support(s) such that either the entire floor support contact area is over the* test block(s) *or the back edge of the* test block(s) *is aligned with the back edge of the rear floor supports.*

This positioning ensures that the test blocks angle the unit within the appropriate range determined by staff in the NPR briefing package. This also ensures that CSUs with glides or levelers smaller than 1 inch will be positioned appropriately, with the entirety of the glide or leveler over the block, while CSUs with larger floor supports will be angled appropriately.

Revise Tip Over Definition

The NPR included the following definition of tip over:

> *Tip over means the point at which a clothing storage unit pivots forward such that the rear feet or, if there are no feet, the edge of the CSU lifts at least ¼ inch from the floor and/or is supported by a non-support element.*

A manufacturer commented that the definition of *tip over* does not encourage innovative designs that intentionally use extension elements to stabilize the CSU and prevent tip overs. The manufacturer recommended using a definition more consistent with that used in ASTM F2057 – 19, which defines a tip over as an "event at which a furniture unit pivots forward to the point at which the unit continues to fall." A voluntary standards organization noted that one side of a unit may lift from the floor before the other side, and recommended instead using a definition consistent with the ANSI/BIFMA standard; in ANSI BIFMA X6.5-2022, the definition of tip over is "the condition where the unrestricted unit will not return to its normal upright position." Other commenters stated that the ¼ inch height is difficult to measure during the test.

The tip over definition in the NPR was developed for the purpose of the stability testing requirements. The definition of *tip over* is relevant to the definitions of *tip-over force* (the force required to cause tip over of the CSU) and *tip-over moment* (the minimum moment about the fulcrum that causes tip over). When conducting Test Method 1 or 2, the tip-over force is used to determine the tip-over moment, which is then used to determine whether the CSU meets the performance requirement by comparing the tip-over moment to the threshold moment. In Tab D[10] of the NPR briefing package, staff stated that if a load is applied with weight, the CSU will tip forward uncontrollably, unless restrained, when the tip weight is reached. However, if a force gauge or other means is used, the CSU will continue balancing. Therefore, staff estimated the rear lifting ¼ inches was an appropriate distance to determine tip over in these cases, rather than using the definition of tip over consistent with other voluntary standards.

Staff agrees that the definition of *tip over* in the NPR, which was determined by the rear of the CSU lifting at least ¼ inch off the ground, could disadvantage CSUs with design features intended to prevent tip overs, such as intentional support elements on extendable elements or doors, if those features would allow the rear of the CSU to lift off more than ¼ inch off the ground while still providing stability.[11] Staff also agrees that the ¼ inch height can be difficult to measure during the stability test. In the NPR briefing package, staff proposed a ¼ inch height instead of these definitions because testing performed using a force gauge or similar means

[10] Taxier, D. (2021.) Tab D: Mechanical Evaluation of Clothing Storage Unit (CSU) Tip-Over Research, Incidents, and Design Solutions, Contributing to Draft Proposed Rule for CSU Inherent Stability. Staff Briefing Package: Draft Notice of Proposed Rulemaking for Clothing Storage Units. U.S. Consumer Product Safety Commission, Bethesda, MD. Available at: https://cpsc.gov/s3fs-public/Proposed%20Rule-%20Safety%20Standard%20for%20Clothing%20Storage%20Units.pdf

[11] These intentional supports are designed to prevent tip-over incidents. In contrast, non-support elements (such as regular drawers and doors) do not contain design features intended to prevent tip-overs, and as such cannot be relied on to prevent injuries or deaths related to CSU tip over.

would not result in the CSU continuously falling forward until the CSU was pushed unreasonably far, and far past the time at which the peak force was measured (typically immediately as the rear of the CSU lifts off the ground). In other words, tip over was defined for the purpose of testing. Based on the comments, the measurement may be too difficult for certain testers, test methods, or CSU designs.

Staff reconsidered the definitions of tip over found in the voluntary standards in consideration of measuring the tip-over force. For most CSUs, the tip-over force, when measured with a force gauge, is determined immediately as the rear of the CSU lifts off the ground, before the rear of the CSU lifts at least ¼ inch off the ground. For other CSUs, when measuring the tip-over force using weights, the rear may rise up to ¼ inch or more, but remain balanced. This suggests the ¼ inch height proposed by staff in the NPR may not work well for certain CSUs for the assessment of tip over. Therefore, staff recommends revising the definition of tip over to address these comments and accommodate tester and design challenges with the ¼ inch criteria. Consistent with other voluntary standards that industry members are already familiar with, staff recommends the following revision:

> *Tip over means an event at which a clothing storage unit pivots forward to the point at which the CSU will continue to fall and/or be supported by a non-support element.*

This proposed change allows testers to determine when tip over would occur, but allows that assessment to be made without the CSU continuously falling forward, and without simultaneous measurements of the tip-over force and the height that the rear of the CSU lifts. Tip-over force measurements using weights will be made as usual, without potential confusion caused by the CSU balancing with the rear of the CSU raised. Additionally, the tip-over force measured with a force gauge is typically determined as the rear of the CSU lifts off the ground, before it reaches the ¼ inch height proposed in the NPR, and this change allows testers to make that determination as appropriate. This change may in some instances cause tip-over forces to be slightly higher when measured with weights, but is not expected to affect tip-over forces when measured with a force gauge. Such slight increases are not expected to significantly affect stability test results. Additionally, this change allows measurement of the tip-over force in a manner consistent with staff's performance of the test methods. Staff concludes this change will not affect the results of the stability test for most CSUs, and will allow CSUs to benefit from a greater range of design features that enhance stability.

Clarify How To Level the CSU

The NPR included the following instructions for levelling a CSU in both the Requirements for Interlocks section and the Requirements for Stability section:

> *If the unit has a* levelling device*, adjust the* levelling device *to the lowest level; then adjust the* levelling device *in accordance with the manufacturer's instructions.*

The purpose of this requirement is to ensure that the CSU is level for testing and is consistent with configuring the unit in accordance with manufacturer instructions. While reviewing the language, staff identified that "levelling device" is treated as singular throughout the NPR. However, CSUs may have two or more levelling devices. To clarify that the levelling requirements apply to all levelling devices on a unit, staff recommends revising the requirements regarding levelling devices to include the plural. This is consistent with the proposal in the NPR because it also ensures that the CSU is level for testing and aligns with manufacturer instructions.

Staff's proposed language is as follows:

> *If the unit has one or more* levelling devices*, adjust the* levelling devices *to the lowest level; then adjust the* levelling devices *in accordance with the manufacturer's instructions.*

This clarification applies to the CSU configuration in both to the Requirements for Interlocks and the Requirements for Stability.

Clarify Requirements for Interlocks and Allow More Interlock Designs

Interlock Definition

In the NPR, the term "interlock" was defined as:

> *Interlock means a device that restricts simultaneous opening of drawers. An interlock may allow only one drawer to open at a time, or may allow more than one drawer, but fewer than all the drawers, to open simultaneously.*

The NPR and draft rule address interlocks because they are an option for increasing the stability of a CSU by decreasing the mass that can be opened from the case of the CSU simultaneously. As such, the NPR and draft rule include testing provisions that accommodate these features and assess the strength of these features to ensure their function during real-world use conditions.

One manufacturer pointed out that interlocks are not limited to drawers and could also be used for pull-out shelves and doors. The same manufacturer stated that the second sentence of the definition does not add any understanding to the function of an interlock.

Staff agrees that interlocks may also be used to improve stability by affecting pull-out shelves and doors. Pull-out shelves and drawers share a similar function as potential load bearing extendable elements which can affect CSU stability. Swinging doors can affect stability in a similar manner as extendable elements, by shifting the center of gravity of the unit outward (toward the front feet) when the doors are opened. Consistent with the NPR, it is necessary for the rule to accommodate interlocks that restrict the extension of any element (drawers, pull-out shelves, or doors) because interlocks would be an option for increasing the stability of a CSU

with any of these elements. Moreover, when an interlock is used on these features, it is necessary to ensure that the interlock will be strong enough to function as intended under real-world use conditions. Although the NPR did not explicitly include pull-out shelves and doors in the requirements regarding interlocks, the NPR did indicate that other similar standards that address interlock integrity apply to extendable elements and that the purpose of the interlock requirements in the NPR was to ensure interlocks function effectively and are accommodated in the test requirements. Therefore, based on comments, staff recommends modifying the definition of an interlock, and the provisions that address interlocks, to refer to extendable elements (*i.e.*, drawers and pull-out shelves) and doors. This will provide design flexibility, allowing firms to include interlocks on various features to improve the stability of a CSU while still ensuring that the interlocks will be able to withstand real-world use conditions.

Staff also agrees that the second sentence of the interlock definition does not add anything to the definition, and is adequately addressed by the first sentence. The stability requirements already specify how to treat CSUs with interlocks that do not affect all extendable elements. Therefore, staff recommends removing the second sentence from the definition.

In addition, a manufacturer commented that the definition of an interlock should not be limited to a "device," as it could be a system of devices; the commenter recommends changing this to "feature." Staff recommends revising the definition of an interlock to refer to "device(s)" as this will not change the meaning of the definition, but will provide design flexibility.

General Requirements for Interlocks

The NPR included the following general requirement for CSUs with interlocks:

> *General. For all* clothing storage units*, including consumer-assembled units, the* interlock *components must be pre-installed, and automatically engage when the consumer installs the* drawers *in the unit. All* interlocks *must engage automatically as part of normal use.*

One commenter misinterpreted the interlock requirements as meaning all CSUs are required to have interlocks. The NPR clearly indicated that interlocks are not required by the rule, but are one option for potentially improving the stability of a CSU. However, to avoid misunderstanding, staff recommends adding explicit wording that the requirements for interlocks only apply to CSUs with interlocks:

> *General. For all* clothing storage units *with interlocks, including consumer-assembled units, the* interlock *components must be pre-installed, and automatically engage when the consumer installs the* interlocked extendable elements or doors *in the unit. All* interlocks *must engage automatically as part of normal use.*

Interlock Pull Test Clarification

For the interlock pull test, the NPR stated:

> *Secure the unit to prevent sliding or* tip over*.*

A manufacturer recommended adding that the unit should be secured without interfering with the interlock function. The purpose of this provision is to assess the strength of the interlock system and its ability to remain fully functional and effective during real-world use conditions. As such, the preliminary step of securing the unit from sliding or tip over clearly should not be done in a way that interferes with the effectiveness of the interlock. However, to ensure this is clear, staff recommends stating this explicitly to ensure that test laboratories do not accidentally influence the results by interfering with the interlock. Staff recommends the following change:

> *Secure the unit, without interfering with the interlock function, to prevent sliding or* tip over*.*

Also for the interlock pull test, the NPR specified application of the force in the following manner:

> *Gradually apply over a period of at least 5 seconds a 30-pound horizontal pull force on each locked* drawer*, one* drawer *at a time, and hold the force for at least 10 seconds.*

A trade association commented that the interlock test method does not specify where the force should be applied to the drawer. The pull area is where a person would typically interact with or pull on the extendable element or door. A pull force test is typically applied where a pull (such as a knob, bar, handle, or other handhold) is already present; however, for long pulls or multiple pulls, it may not be clear where the pull force should be applied. The location where the pull force is applied may affect the outcome of the test, making it important that this force be applied consistently by testers. To address these comments and provide clarity to ensure reliable test results, staff recommends clarifying where to apply the force for this test.

Consistent with typical pull force application sites, and because the test requirements in the rule are intended to simulate real-world use conditions, the typical interaction area is a reasonable location to apply the force. As such, staff recommends specifying that the force be applied on the pull area. For elements with more than one pull area on a single extension element or door (*e.g.*, 2 knobs on a single drawer) or for elements with long pulls, more detail is necessary to clarify which pull area or where on the pull area to apply the force. Elements with multiple pulls or long continuous pulls should be tested an equal number of times as units with a single pull, rather than testing such units multiple times with each pull feature. Therefore, staff recommends specifying that the pull test is conducted at the center of the "pull area(s)" (*e.g.*, at a knob; midway between two knobs; or the center of a bar, handle, or other handhold). For long pulls, this would indicate that the center of the pull area is to be used. For elements with multiple pull areas, testers could determine how to apply the force to the center, such as by connecting them with rope or wire. Additionally, the statement should be updated to reflect the fact that interlocks can also affect pull-out shelves and doors, as discussed with the

recommended changes to the interlock definition above. Staff recommends the pull test be revised to the following:

> *Gradually apply over a period of at least 5 seconds a 30-pound horizontal pull force on each* interlocked extendable element *or door at the center of the pull area(s), one element at a time, and hold the force for at least 10 seconds.*

The proposed change reflects a typical pull force test setup, and may in some instances mean that an interlocked extendable element or door which would fail the test when pulled in an inappropriate or unlikely interaction location would now pass. Staff is not currently aware of any units where this will affect the test result, but that is largely because CSUs with interlocks are still rare. Staff will continue to monitor incident data related to units with interlocks so that the test method may be modified if appropriate.

Interlock Test Criteria

The NPR included the following test criteria:

> *During the testing specified in paragraph (b) [the pull test] of this section, if any locked* drawer *opens or the* interlock *is damaged, then the* interlock *will be disabled or bypassed for the stability testing in § 1261.4(c).*

The purpose of this requirement is that, if the interlock does not function as intended or cannot withstand the real-world use conditions in the test, it should not be used during stability testing because it cannot be relied on to provide added stability for the CSU during real-world use.

Staff has become aware of interlocks which, rather than locking an extendable element in the case, will instead allow the extendable element to extend while retracting the already extended element. These features restrict simultaneous extension of extendable elements, which addresses the hazard of multiple open drawers. But these types of interlocks are not accounted for by the requirements in the NPR, because they allow other extendable elements to open. To provide for design flexibility, staff recommends revising the requirement to account for these interlock designs, as follows:

> *The* interlock *will be disabled or bypassed for the stability testing in § 1261.4(c) if, as a result of the testing specified in paragraph (b) of this section:*
>
> *(1) any fully engaged interlocked extendable element or door extends during the test without closing the originally open extendable element or door; or*
>
> *(2) any interlock or interlocked extendable element or door is damaged or does not function as intended after the test.*

This is consistent with the NPR because it continues to specify that an interlock must function as intended and withstand the appropriate forces to be used during stability testing. However,

these changes will allow interlock designs which retract extended elements, which would provide similar improvements to stability as traditional interlocks and mitigate the hazard, while continuing to test the effectiveness and integrity of the interlock system.

Clarify Assembly Instructions for the Stability Test

The test configuration provisions in the NPR required testers to assemble the unit according to the manufacturer's instructions. As the NPR emphasized, the rule intended to address the inherent stability of CSUs, without attachment to the wall, because staff's data and analysis (in Tab C of the NPR briefing package) demonstrated that consumers do not commonly attach CSUs to the wall and, even if they do, the attachment may not be effective or installed correctly. A manufacturer commented that the requirement to assemble the unit according to the manufacturer's instructions does not account for instructions which say to attach the unit to the wall. Staff is aware of some assembly instructions which include steps to use a tip restraint attached to the wall. To clarify that testing is to occur without attachment to the wall, staff recommends adding to the configuration instructions that: "Units shall not be attached to the wall or any upright structure for testing." This will ensure CSUs are tested for inherent stability.

Clarify Placement Orientation of the CSU on the Test Surface

The NPR proposed, as part of the test configuration, to require that testing occur on a hard, level, flat test surface, which the NPR defined as sufficiently hard to not bend or break under the weight of the CSU and testing loads, smooth and even, and with no more than 0.5 degrees of variation. The Commission received comments that the angle of the test surface is critical to the test; a test laboratory determined that the allowable tolerance on the test surface could result in a 4% overestimate or a 3% underestimate from the nominal test result.

Staff agrees with comments that the angle of the CSU on the test surface is critical to the test. The NPR generally recommends testing in the least stable configuration when multiple ways to set up are possible. For example, when an interlock system would prevent all drawers from being pulled out, the NPR states to open all drawers not locked by the system "in the configuration most likely to cause tip over." Consistent with this approach in the NPR, staff recommends revising the test configuration provision to specify that the CSU be placed in the orientation most likely to cause tip over. This will address the possibility of any overestimates of stability by not allowing the CSU to be placed in a more stable orientation than level.

A manufacturer also commented that a CSU can slide during the stability test and affect test results. To address this, staff recommends adding to the test configuration requirements that, "If necessary, secure the unit from sliding without preventing tip over." This is a clarification of the requirements in the NPR since it was implicit in stability testing requirements that the unit should not be secured from tipping over during testing, as that would defeat the purpose of the testing. Testers could prevent a unit from sliding using high friction surfaces or specially designed blocks, among other options.

Remove Leveling for a Carpeted Surface

For stability testing, after configuring the CSU according to manufacturer instructions, leveling it, and tilting it to simulate carpet, the NPR stated that if the CSU has a levelling device intended for a carpeted surface, to adjust the level in accordance with the manufacturer's instructions for a carpeted surface. Several consumer advocates commented that allowing levelling devices to be adjusted for a carpeted surface would allow CSUs to be tested in a more favorable position, while consumers may not make the appropriate adjustments at home. As the NPR explains, the purpose of the rule is to assess the stability of CSUs under real-world use conditions that contribute to instability. This includes testing CSUs on a surface that simulates the effect of carpeting, since carpet is shown to be associated with increased instability. This also includes accounting for real-world conditions, such as consumers not leveling for carpet. Consistent with the purpose of the NPR and in consideration of these comments, staff recommends removing the direction to adjust the level for a carpeted surface in the stability test for the draft final rule, to reflect that consumers may not make that adjustment when the CSU is used on a carpeted surface.

Clarify Door Position

As part of the stability test configuration, the NPR specified the following:

> *Open all hinged* doors *that open outward or downward to the position where the center of mass of the door is extended furthest from the front face of the unit (typically 90 degrees).*

The purpose of this provision was to open any doors to the least stable configuration for testing. As staff stated in the NPR briefing package, "For the proposed test requirements, ESMC staff recommends that all extension elements—including drawers, doors, pullout shelves, and any other extendable elements—be opened and extended to the maximum extension and least-stable configuration."

CPSC received comments asking that the test be simplified. Some testers may conclude that the language in the NPR means they need to measure the center of mass of the door, which was not the purpose of this provision. To follow this intent and for ease of understanding, staff recommends changing the wording to the following:

> *Open all hinged* doors *that open outward or downward to the least stable configuration (typically 90 degrees).*

This change will clarify that testers need not measure the center of mass of the door, and is consistent with the stated purpose of these provisions—namely, to configure the CSU in the least stable, real-world position for testing.

Consistent with this, a similar change is recommended in the definition of *door extension from fulcrum distance*. In the NPR, this was defined as "the horizontal distance measured from the farthest point of a hinged door that opens outward or downward, while the door is in a position

where the center of mass of the door is extended furthest from the front face of the unit (typically 90 degrees), to the *fulcrum*."

Staff recommends revising this as follows: "the horizontal distance measured from the farthest point of hinged door that opens outward or downward, while the door is in the least stable configuration (typically 90 degrees), to the *fulcrum*." This will ensure both provisions are consistent with each other and the stated purpose, while reducing potential confusion about how to comply with these provisions.

Clarify Requirements for Fill Weights in Drawers and Pull-Out Shelves

Overview

The NPR specified that for stability testing, a fill weight "consisting of a uniformly distributed mass in pounds that is 8.5 (pounds/cubic foot) times the functional volume (cubic feet)" must be placed in the center of each drawer or pull-out shelf. This applied to CSUs without interlocks, CSUs with interlocks that did not withstand the interlock testing, and CSUs for which 50 percent or more of the drawers and pull-out shelves by functional volume can open simultaneously. It further specified to secure the fill weight from sliding. As the NPR explained, the purpose of this fill weight is to simulate the presence of clothing in CSUs, which contributes to instability when filled drawers are open, and contributes to stability when filled drawers are closed.

Several comments related to the fill weights and how they can affect the repeatability and reproducibility of the test. Staff's recommended changes to the draft final rule are below.

Clarify the Fill Weight Amount

The NPR specifies that fill weights shall consist of "a uniformly distributed mass that is 8.5 (pounds/cubic feet) times the *functional volume* (cubic feet)." The NPR did not specify a tolerance on the fill weight density. Commenters identified this as a potential source of testing error; a test lab identified how using standard test weights with no specified tolerance could in some cases decrease a CSU's rating by 3% to 6%.

The NPR did not specify a tolerance range for the proposed fill density of 8.5 pounds per cubic foot of functional volume. However, achieving a fill density of precisely 8.5 pounds per cubic feet of functional volume would depend on the accuracy and precision of the instruments used to measure the functional volume and the fill weight. As the commenter noted, slight variations in fill density can affect the stability test results. Therefore, staff considers it reasonable to provide a tolerance for the required fill density. As the NPR explained, staff (as well as ASTM) determined that 8.5 pounds per cubic feet of functional volume is the appropriate fill density to simulate clothing. The proposed fill density of 8.5 pounds per cubic feet of functional volume for drawers has not been called into question, and based on ESHF staff's evaluation of fill density on a pull-out shelf in Tab C, that the same fill density is recommended for pull-out shelves.

The NPR explained that fill weight in closed drawers contributes to stability, while fill weight in open drawers contributes to instability. The NPR also made clear that testing is intended to simulate the least stable likely configuration during real-world use of the CSU. As such, to provide the requested tolerance for fill density and accommodate variations in measurements, while still ensuring consistency with the NPR and the 8.5 pounds per cubic foot of functional volume which accurately represents clothing contents, staff recommends stating in the draft final rule that the fill density for open extendable elements must be "at least 8.5 (pounds/cubic foot)" of functional volume. That will allow manufacturers and test labs to use a greater fill density to accommodate variation. Additionally, to ensure filled extendable elements which remain closed during the stability test are not over-filled, staff recommends adding that those extendable elements must have a fill density of "no more than 8.5 (pounds/cubic foot)" of functional volume. The recommended text is as follows:

> *If 50% or more of the extendable elements by functional volume are open, place a fill weight in the center of the bottom surface of each extendable element, including those that remain closed (see Figure 7a), consisting of a uniformly distributed mass in pounds. The fill weight in open extendable elements must be at least 8.5 (pounds/cubic foot) times the functional volume (cubic feet). The fill weight in closed extendable elements must be no more than 8.5 (pounds/cubic foot) times the functional volume. If necessary, secure the fill weights to prevent sliding.*

Clarify the Fill Weight Position

The NPR required that a fill weight be placed in the center of each drawer or pull-out shelf if there was no interlock or 50% or more of the drawers and pull-out shelves by functional volume are open (meaning extended). The intended meaning of this provision was that the fill weight be placed at the center of the storage space. Staff considered this meaning clear in the NPR, and it is consistent with the definition of functional volume of a drawer or pull-out shelf, which refers to the volume of the storage space, and is defined with respect to the bottom surface.

However, a trade association noted that the lack of specific tolerance on the fill weight position could be a source of testing error; a manufacturer said the position could be clarified as the center of the bottom surface; and other commenters said more generally that the location for the weight should be clarified. Based on these comments, it is possible that the positioning language in the NPR can be interpreted as the center of the entire drawer, including accounting for the thickness of front and rear solid face, rather than the center of the storage space. This could move the center of the drawer up to 1/2 inch forward for a 1 inch thick front drawer. To address these comments, staff recommends clarifying that the fill weight be positioned at the center of the bottom surface of the extendable element, as suggested by the commenter and to remain consistent with the definition of functional volume.

Only Secure Fill Weights if Necessary

Although three provisions in the NPR required the presence of the fill weight (CSUs without interlocks, CSUs with interlocks that don't pass interlock testing, and CSUs with interlocks when more than half of drawers are open), the requirement that the fill weight be secured to prevent sliding was present only in the section on CSUs with more than half of drawers open, and not the other two sections. Part (b)(7)(ii) did not specify to secure the fill weight, while Part (b)(8)(ii)(B) did.

The Commission received a comment recommending adding a requirement to secure the fill weight to prevent sliding. But staff have observed during testing that it is not always necessary to secure the fill weights to prevent sliding, though it can be helpful at times. Requiring the fill weights to be secured when it is not necessary could be considered onerous. Also, a sliding fill weight will tend to slide forward and reduce the tip-over moment (and reduce the likelihood of passing the test), rather than increase the tip-over moment. Therefore, to address comments and staff's observations, staff recommends requiring the fill weights to be secured in the relevant test sections only if it is necessary to prevent sliding. This change is consistent with balloted ASTM language and provides greater clarity, consistency, and flexibility for test labs. Staff also recommends streamlining these provisions in the NPR to avoid redundancy, as discussed below, which will also eliminate the need to state the fill weight securement requirements in multiple places.

Remove Redundant Requirements Based on Interlock Use

In the NPR, staff included separate fill requirements for units without an interlock, and for units with an interlock. However, the fill requirements for units without an interlock are the same as the requirements for units with interlocks where 50% or more extendable elements are open. At this stage of the stability test, these requirements are redundant; the interlock (if present) has already been tested to the Requirements for Interlocks, and interlocks which did not meet the test criteria were identified to be disabled or bypassed. It now only matters whether 50% or more of the extendable elements by volume can be extended simultaneously or not. Therefore, staff recommends not making a distinction between requirements for units with and without interlocks, and basing the assessment only on how much of the extendable element volume can be extended.

Additionally, the requirements for acceptable interlock systems are already stated in the Requirements for Interlocks section, and do not need to be restated in the Requirements for Stability section. Staff recommends stating to "disable or bypass any *interlock(s)* as necessary" per the Requirements for Interlocks test, rather than restating the requirements.

Changes to Test Method 1 and Test Method 2

The NPR provided two test methods for the tip-over test. As the NPR explained, Test Method 1 is most appropriate for CSUs with extendable elements (drawers or pull-out shelves). It involves applying a vertical force to the face of the uppermost open extendable element to

cause the unit to tip over. The tip-over moment of the unit is then calculated by multiplying the tip-over force by the horizontal distance from the force application point to the fulcrum. Test Method 2 is appropriate for any CSU. It involves applying a horizontal force to the back of the CSU orthogonal (*i.e.*, at a right angle) to the fulcrum to cause the unit to tip over. The tip-over moment is then calculated by multiplying the tip-over force by the vertical distance from the force application point to the fulcrum. The NPR specified that testers should use whichever test method is more appropriate for the CSU.

CPSC received several comments discussing Test Methods 1 and 2, and staff recommends several changes to address some of those comments.

Clarify When to Measure the Distance from the Force to the Fulcrum

As discussed in the recommended revision to the definition of a fulcrum, the fulcrum position should be determined before a tip-over force is applied because the fulcrum position is used as a reference point for several measurements. However, comments indicate that this was not clear in the NPR, and the wording in Test Methods 1 and 2 contributed to that confusion by stating to record the distance from the force application point to the fulcrum and the tip-over force at the same time.

Therefore, staff recommends specifying that the distance measurements to the fulcrum are to be taken before the force is applied in Test Method 1 and Test Method 2. Specifically, staff recommends that the first step of Test Method 1 be to record the horizontal distance from where the center of force will be applied to the fulcrum. Staff recommends that the first step of Test Method 2 be to record the vertical distance from where the center of force will be applied to the fulcrum.

Require Test Method 1 to be Conducted with Weights

For Test Method 1, the NPR directed testers to gradually apply a vertical force to a specified location, leaving the option of how to apply that force open. CPSC received several comments from manufacturers and trade associations saying that the stability test methods in the NPR lacked repeatability and reproducibility. Several of these commenters state that the test methods are subjective, based on who is performing the test. One trade association referred to testing conducted at an ASTM F15.42 Furniture Safety Subcommittee meeting, where stability testing was performed by hand. Two trade associations included a report from a testing laboratory which included tip-over testing in which the force was applied and measured with a force gauge by hand, with weights, and by machine. Testing by hand had the most variable results; testing with weights had consistent results, but was limited to Test Method 1; testing by machine also had consistent results within a particular test method, but had a large discrepancy between Test Method 1 and Test Method 2.

Staff reviewed the comments and the laboratory report, and found that much of the subjectivity and variability found in the results came from the testers applying the force by hand. The laboratory test report concluded, “As often as possible, static load on the drawer front must be

preferably used." Consistent with these comments and test results, staff recommends clarifying in the final rule that Test Method 1 must be conducted using weights:

- For the purpose of the distance measurement to the fulcrum (discussed in the above section), the center of force application is considered the center of gravity of the weights to be applied.
- The weight shall be applied to an extended extendable element to cause the unit to tip over.

This provides greater clarity for testers on how to apply the force, is a clear and repeatable way to conduct testing, and would reduce potential variability in results.

Manufacturers or test labs that choose to be precise can determine the exact center of gravity of the applied weights. The top center of the drawer face is a reasonable approximation for linear drawer faces because the center of gravity of the applied weights will be aligned with this location. For curved drawers, the center of the drawer face where the most rearward weight is to be placed is a conservative and reasonable approximation.

Placement of Weights Across Multiple Extendable Elements in Test Method 1

In the NPR, the vertical force in Test Method 1 was applied to the face of the uppermost extended extendable element to cause the unit to tip over. However, commenters raised concerns that this would cause drawers to break during testing, implying that testers would not be able to complete the test as a result. Staff agrees that broken drawers could result in the tester being unable to complete the stability test. The NPR included a note regarding modifications which intended to address these concerns.[12] Because staff now recommends conducting the test with weights, staff recommends the following specifications for how the weight is applied:

- The weight shall be placed on a single drawer face or distributed evenly across multiple drawer faces or as adjacent as possible to the pull-out shelf face.
- The weights shall not interfere with other extended extendable elements.

These proposed changes allow the test weight to be distributed across multiple drawers (if multiple drawers are available), which reduces the risk of drawers breaking and causing the test to not be completable. The center of gravity of the applied weight is equivalent to the force application point described in the NPR; while this change may slightly alter the measured tip-over force and the measured distance from the force application point to the fulcrum, it will not affect the tip-over moment determined by multiplying the aforementioned measurements. Additionally, the weights are not allowed to interfere with extended extendable elements so as

[12]Staff's recommended modifications to this note are discussed in a later section.

to not alter the center of gravity of the CSU. Therefore this change will not affect the test results.

Changes and Clarifications in Test Method 2

In the NPR, Test Method 2 required a horizontal force to be applied to the back of the unit orthogonal to the fulcrum to cause the unit to tip over. The NPR did not specify how to apply the force, allowing either a push or pull force for this purpose.

CPSC received several comments from manufacturers and trade associations stating that the stability test methods in the NPR lacked repeatability and reproducibility. The comments regarding these issues with respect to Test Method 1, discussed above, were also made with respect to Test Method 2.

Staff assessed the repeatability and reproducibility of Test Method 2 by reviewing the laboratory test report that was provided by two trade associations, and by comparing the test to other furniture stability tests that apply a horizontal force.

To address these comments, staff reviewed a laboratory test report submitted by two of the commenters. The laboratory report indicated variability in both methods, with Test Method 1 being almost twice as variable as Test Method 2 when both tests were conducted by hand (3.5% to 7.0%, compared to 2.0% to 4.5%, respectively). Staff identified the force location and application method as potential contributors to variability. Staff addressed the variability of Test Method 1 with a recommendation to require the test to be conducted with weights, as described above. To address the variability of Test Method 2, staff considered possible modifications to the force location and application method by looking at other furniture stability tests that apply a horizontal load. Staff identified three applicable tests:

1. ANSI/BIFMA X6.5-2022, section 4.9
2. ANSI/BIFMA X6.5-2022, section 4.10
3. ASTM F2057 – 19 Ballot F15 (22-06) Item 8, section 9.2.2

Two of these tests differ from Test Method 2 in that they apply a horizontal pull force to the drawer, rather than to the back of the unit; the other test applies a push force to the back of the unit, consistent with the NPR, and to other locations. All three of the tests are otherwise similar in methodology; the key remaining difference is in the types of storage units to which they apply, suggesting that different force application sites may be appropriate for different CSUs.

The NPR already allowed either a push force or a pull force, so long as it was applied to the back of the unit orthogonal to the fulcrum; based on these other test methods and the comments on the NPR, staff finds that test laboratories may prefer to apply a force to a location other than the back of the unit, and that the preference and appropriateness of a method may vary depending on the design of the unit. Additionally, staff has no evidence that any of these tests, all conducted by hand, would produce more or less consistent results than the others.

Therefore, consistent with the comments, staff recommends removing the requirement that the force be applied to the back of the CSU because the appropriate force application location may differ depending on the unit design and this will allow test laboratories the flexibility to determine the best location to apply a force when using Test Method 2 for each unit. The laboratory's preference may have a small influence on producing less variable results but staff does not expect this recommended revision to alter stability test results in general.

Staff also identified a typographical error in Test Method 2: the method only stated to record the force, rather than the tip-over force. Staff recommends correcting the error.

Finally, as discussed above, staff recommends changes to the definition of *tip over* to mean the event when a CSU pivots forward to the point at which the CSU would continue to fall and/or be supported by a non-support element. This tip over point may not be clear to testers performing Test Method 2 because a significant change in tilt angle may be required before the CSU will continue to fall forward. However, the tip-over force is typically measured immediately as the rear of the CSU begins to lift off the ground. The exception is units with support elements in front of the fulcrum intended to prevent CSU tip over. Support elements intended to prevent tip over will typically enhance stability by acting as a secondary fulcrum. While staff have seen some designs of these units, staff is not aware of any of these units being available on the market, and therefore has not tested them. Staff notes that force should be applied to these units while the CSU tips over the secondary fulcrum. Staff will continue to monitor these units as they become available, and will consider modifications to the test methods to accommodate these and other innovative units should the need arise.

Remove Overlap Between Test Method 1 and Test Method 2

The NPR specified that Test Method 1 could be used for CSUs with drawers or pull-out shelves and that Test Method 2 could be used for any CSU. Staff reported in the NPR that the test methods produced approximately equal tip-over moments, and therefore either test method could be used.

As discussed above, there were several comments from manufacturers and trade associations stating that Test Method 1 and Test Method 2 yield substantially different results. As explained above, this was primarily due to differences in force application methods, but was also partly due to differences between the two test methods. However, the differences between the two test methods appear to be small. A test laboratory reported only a 3% difference when comparing Test Method 1 conducted with weights to Test Method 2 conducted by hand. These small differences between test method and force application methods corroborates staff's conclusion in the NPR that the two tests (with the above revision to force application methods) yield comparable stability results. However, staff considered revisions that may reduce this potential variation further to ensure that CSUs yield consistent and reliable stability test results, which is important for ensuring they are adequately stable. In addition, many of these commenters, as well as some consumer advocates, supported adopting only one of the test methods to simplify testing. Test Method 1 received some support from consumer advocates

because it was closest to the methodology used in the ASTM stability test; Test Method 2 received some support as the "only consistently viable test method" because there were concerns about Test Method 1 resulting in broken drawers.

Staff does not recommend eliminating one of the two test methods from the final rule. As previously discussed, Test Method 1 with weights is the most accurate and least variable method for assessing the stability of the units, based on commenters' data. But Test Method 1 is not appropriate for units without extendable elements since it requires applying a vertical force to an extendable element. Test Method 1 also is not appropriate for units with short extendable elements because the high loads required to induce tip over increases the potential for drawers to break and placing heavy weights on the drawer front is difficult. Therefore, Test Method 2 is a necessary option for testing units without extendable elements or with short extendable elements. Staff determined that Test Method 2 has slightly higher variability than Test Method 1, which is why Test Method 2 on its own, is not advisable. However, Test Method 2 is similar in variability to other voluntary standards that use a horizontal load. Therefore Test Method 2 is necessary for CSUs for which Test Method 1 is not appropriate.

Based on this assessment, staff recommends revisions to the applicability of each test method. To address the comments, staff recommends applying each test method to different CSUs, based on which CSUs each test best accommodates. This would eliminate potential overlap and the potential for inconsistent results that were raised by commenters. This would also simplify testing, as commenters requested, by making clear which CSUs must undergo which test method. Specifically, staff recommends that instead of Test Method 1 being generally allowed for any CSUs with extendable elements, it be used for CSUs with extendable elements that extend at least 6 inches from the fulcrum. This is consistent with the CSUs subject to Test Method 1 in the NPR, since it still applies to those with extendable elements, but specifies which such units should fall under Test Method 2 instead. In addition, staff recommends that instead of Test Method 2 being allowed for any CSU, it be used for any CSU for which Test Method 1 does not apply. Again, this is consistent with the NPR, but removes potential overlap that was causing confusion and potential variation in test results. The justifications for this are discussed below.

Staff analyzed the minimum weight required to meet the performance requirement when using Test Method 1. Test Method 1 requires that weight be placed on the unit's extendable element face until the unit tips over; that weight is multiplied by the distance it is applied from the fulcrum to determine the tip-over moment. The tip-over moment is then compared to the threshold moment, evaluated in the performance requirement section, and later turned into the stability rating on the hang tag. The tip-over moment is required to be greater than the threshold moment, for a minimum stability rating of 1.0. Using Test Method 1, there will be a minimum weight required on an extendable element for a unit to have a stability rating of 1.0.

As explained in the NPR and NPR briefing package, applying force at a location further from the center of gravity of the CSU increases instability more than applying the force closer to the center of gravity of the CSU (*e.g.*, this is why testing is done with open drawers with weights

placed on them). Therefore, the minimum weight to meet the performance requirement increases as the extendable element distance from the fulcrum decreases, as shown in Figure 3. When extendable elements have very short distances from the fulcrum, the load required on the extendable element becomes so high that Test Method 1 becomes impractical: the required load increases, which contributes to weight taking up more space on the drawer face or the pull-out shelf, and the likelihood of the extendable element breaking increases. For example, a drawer with the median extension of 9.75 inches requires at least 88 pounds to meet the climbing threshold moment, while a drawer with a 6 inch extension requires at least 109 pounds – an almost 25% increase.[13]

In general, for CSUs with long extendable element extensions, vertical forces (such as body weight) play a dominant role in producing a tip-over moment. However, as extendable element extensions are shorted or removed, horizontal forces (such as a pull force, or the force required to hold the body in front of the CSU face) dominate the tip-over moment. Vertical forces have very little ability to produce a tip-over moment when extendable element extensions from the fulcrum are sufficiently short, as demonstrated in Figure 2.[14] The NPR addressed this by allowing Test Method 2 for any CSU. However, staff established earlier in this memorandum that Test Method 1 is the preferred method to test most CSUs to achieve the most accurate results. Therefore, to address concerns related to the test methods having different results, it is necessary to establish a lower limit on which extendable element extensions can be tested using Test Method 1, and apply Test Method 2 to only those units with extendable element extensions shorter than the limit (or with no extendable elements).

[13] The rate at which the weight rises increases rapidly as the extension distance decreases.
[14] A detailed analysis of the combination of forces produced by climbing interactions and how these forces produce a tip-over moment can be found in Tab D of the NPR staff package.

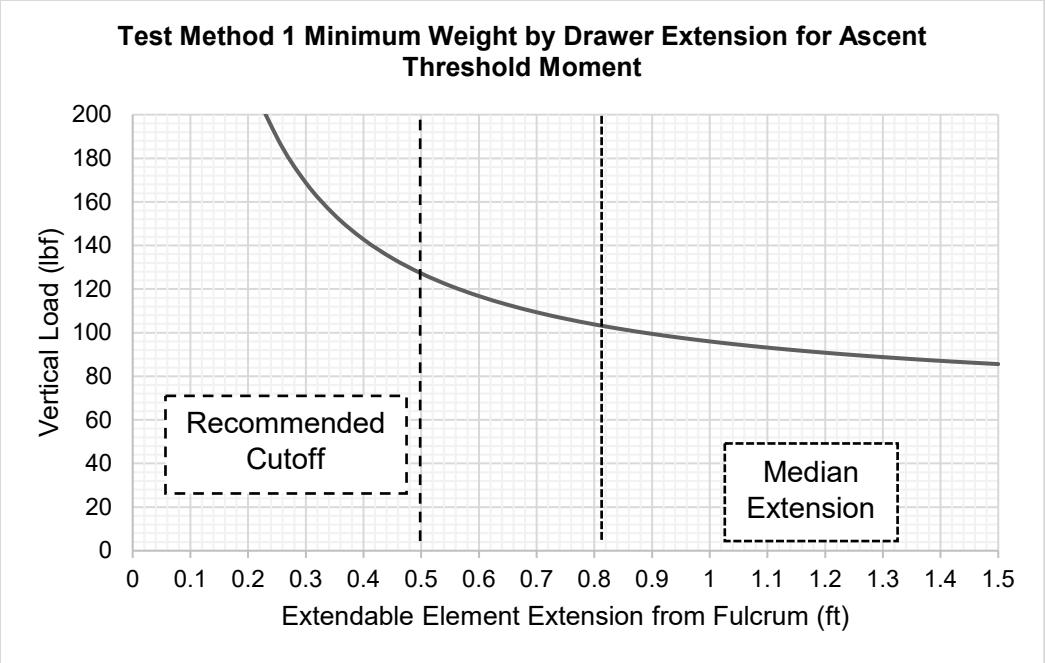

Figure 6. Test Method 1 minimum weight by drawer extension for ascent threshold moment.

In the dataset of 180 CSU drawer extensions CPSC staff provided to UMTRI researchers, the median drawer extension was approximately 0.81 feet (9.75 inches), with an approximate range of 0.53 feet (6.38 inches) to 1.15 feet (13.75 inches), as indicated in Tab D of the NPR briefing package. The median and range of typical drawer extensions was shown in Figure 24 of Tab D of the NPR briefing package, shown below in Figure 7.

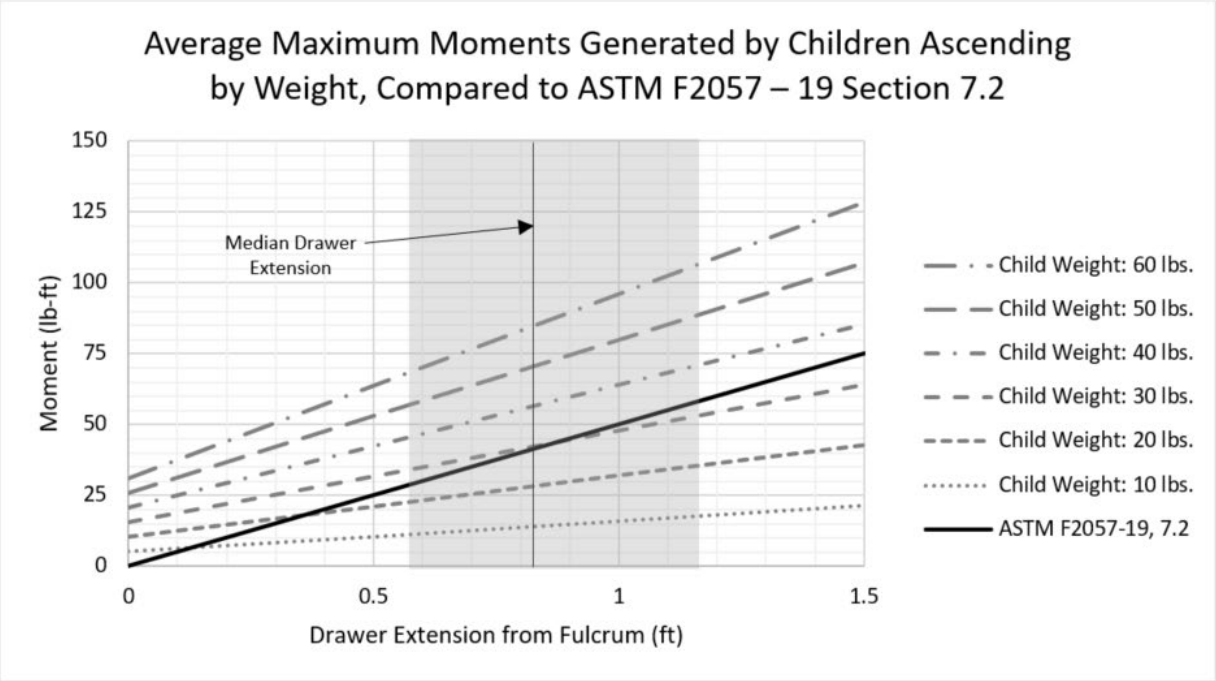

Figure 24. Moments generated by children ascending a CSU, compared to the moment generated by the static test weight in ASTM F2057 – 19 Section 7.2. The typical range of drawer extensions of a CSU is highlighted in gray, and the median drawer extension is indicated with a vertical line.

Figure 7. This figure from the NPR briefing package shows the typical range of drawer extensions.

As this figure illustrates, the minimum drawer extension from the fulcrum staff observed was just over 0.5 feet, or just over 6 inches. Therefore, staff recommends that Test Method 1 shall apply to all CSUs with extendable elements that extend at least 6 inches from the fulcrum, while Test Method 2 shall apply to all CSUs for which Test Method 1 does not apply (including CSUs without extendable elements).

Clarify Potential Repairs

The NPR included the following note to address repairs under Test Method 1:

> *If a drawer breaks during the test due to the force, use Test Method 2 or secure or reinforce the drawer, as long as the modifications do not increase the tip-over moment.*

This was included in the NPR so that Test Method 1 could be completed even if the force applied to the drawer face resulted in the drawers breaking. Additionally, this language in the NPR did not allow modifications which would improve stability. The test method is intended to address the stability of the product, not the strength of the product. It may be necessary for a

tester to conduct repairs or modifications to complete stability testing if weaker components break during the test. Staff's testing experience has shown that some CSU drawer designs cannot hold much more than 60 pounds without requiring additional reinforcement, and staff expects most CSUs to require more than 80 pounds on the drawer front to meet the minimum performance requirement (see Figure 3 above).

One commenter expressed concerns that the testing would result in drawers needing repairs, and staff heard during an ASTM meeting that some test laboratories were concerned they would not be able to determine whether a repair would result in increasing the tip-over moment without additional testing. A manufacturer requested additional guidance on how to address CSU components breaking during the test, to allow the test to be completed.

Based on these comments, and the recommended changes to Test Methods 1 and 2, discussed above, staff recommends several revisions to address breakage during testing.

First, because staff recommends that Test Method 1 and Test Method 2 should not apply to the same CSUs, the statement to use Test Method 2 no longer applies and can be removed.

Second, while the NPR allowed repairs for drawers, which are the most common component to break during stability testing, staff recognizes other components can also break or fail and limit the ability of the tester to complete the test. Staff therefore recommends revising the text to allow other components to be repaired or replaced if necessary to complete the test. This is consistent with the purpose of the repair provision, which is to allow stability testing to be completed should weaker components break or fail.

Third, staff recommends changing the note to a requirement for suitable repairs or modifications to allow the completion of testing, and to make the requirement applicable to both Test Method 1 and Test Method 2. The note in the NPR was intended to allow completion of testing when it would not have otherwise been possible. However, as a note, it had limited applicability and visibility. Additionally, while component failures are less likely using Test Method 2, they are still possible, and testers should have the means to repair or replace failed components accordingly, for the same reasons repairs need to be available for Test Method 1.

Finally, as the NPR indicated, only repairs that do not increase the stability of the CSU are permissible, so as not to undermine the integrity of stability test results.

Staff considered the language in ASTM F2057 – 19 section 4.3 to address repairs:

> *If a failed component prohibits the completion of the test, then the failed component(s) shall be repaired or replaced to the original specifications, or the component replaced and the test repeated with the failed component secured as to not affect the test results but to prevent the component from failing.*

This allows failed components to be repaired, replaced, and secured, so long as the change does not affect test results; modified components cannot cause a CSU which would otherwise

fail the stability test to pass (and vice versa). However, the Commission's rule cannot allow modification to make a CSU more stable because this would affect the testing outcome.

Staff modified the ASTM repair language to specify that repairs are allowed as long as they do not increase the tip-over moment to be consistent with the NPR, which only allowed repairs which do not increase stability. Staff recommends providing the repair language in a separate subparagraph, such that it applies to both Test Method 1 and Test Method 2, whereas the NPR only included it for Test Method 1.

Staff recommends revising the text and placing it into a new section at the end of the test procedure:

> *If a failed component prevents completion of the test, then to continue testing, the failed component(s) must be repaired or replaced to the original specifications, or the component replaced and the test repeated with the failed component secured to prevent the component from failing, as long as the modifications do not increase the* tip-over moment.

Staff considered modifications to the CSU that could be made as part of a repair, and how it may affect the tip-over moment of the unit. In general, modifications that add weight behind the CSU fulcrum will increase the tip-over moment, while modifications that add weight in front of the CSU fulcrum will decrease the tip-over moment. Small increases in weight of less than one pound are unlikely to result in substantial changes in the tip-over moment, particularly if they are close to the fulcrum, and would be acceptable. Examples of modifications that do not increase the tip-over moment are to use fasteners such as screws or nails to secure a component, or to buttress an extendable element using material weighing less than one pound.

Conclusion

The Commission issued an NPR with requirements that account for real-world use conditions and interactions with CSUs, including:

- Multiple open extendable elements;
- Filled and unfilled extendable elements;
- Carpeted floor surfaces;
- Dynamic forces from a 51.2 pound (*i.e.*, 95th percentile 3-year-old) or lighter-weight child, climbing/ascending and other interactions; and
- A child pulling on the top handhold that is within a 3-year-old child's reach.

ESMC staff reviewed public comments and feedback received during staff's work with the ASTM F15.42 furniture subcommittee, and developed responses to those comments. Staff's review of the NPR and response to comments resulted in several recommended changes to the

draft final rule which will improve testers' ability to follow the rule and produce more consistent results, and further reduce the risk of injury associated with CSU tip overs..

Appendix D1 – Summary of Changes to the Draft Final Rule

Below are the original text of the Definitions, Requirements for Interlocks, and Requirements for Stability in the 2022 CSU NPR (§ 1261), staff's recommended changes for the draft final rule, and a summary of why the change was made.

Section 2: Definitions

2022 CSU NPR	Staff's Draft Final Rule	Summary
In addition to the definitions given in section 3 of the Consumer Product Safety Act (15 U.S.C. 2052), the following definitions apply for purposes of this part:	In addition to the definitions given in section 3 of the Consumer Product Safety Act (15 U.S.C. 2052), the following definitions apply for purposes of this part:	No change.
(a) *Clothing storage unit* means a *freestanding* furniture item, with *drawer(s)* and/or *door(s)*, that may be reasonably expected to be used for storing clothing, that is greater than or equal to 27 inches in height, and with a total *functional volume* of the *closed storage* greater than 1.3 cubic feet and greater than the sum of the total *functional volume* of the *open storage* and the total volume of the *open space*. Common names for clothing storage units include, but are not limited to: chests, bureaus, dressers, armoires, wardrobes, chests of drawers, drawer chests, chifforobes, and door chests. Whether a product is a clothing storage unit depends on whether it meets this definition. Some products that, depending on their design, may not meet the criteria in this definition and, therefore, may not be considered clothing storage units are: shelving units, office furniture, dining room furniture, laundry hampers, built-in	(a) *Clothing storage unit (CSU)* means consumer product that is a *freestanding* furniture item, with *drawer(s)* and/or *door(s)*, that may be reasonably expected to be used for storing clothing, that is designed to be configured to greater than or equal to 27 inches in height, ~~and with~~ has a mass greater than or equal to 57 pounds with all *extendable elements* filled with at least 8.5 (pounds/cubic foot) times their *functional volume* (cubic feet), has a total *functional volume* of the *closed storage* greater than 1.3 cubic feet ~~and~~, and has a total *functional volume of the closed storage* greater than the sum of the total *functional volume* of the *open storage* and the total volume of the *open space*. Common names for clothing storage units include, but are not limited to: chests, bureaus, dressers, armoires, wardrobes, chests of drawers, drawer chests, chifforobes, and door chests. Whether a product is a clothing storage unit depends	(1) Clarifies that CSUs are consumer products. (2) Clarifies that units which can be configured to greater than 27 inches in height are included. See Unit Height discussion. (3) In response to comments about excluding lightweight units weighing less than 30 pounds, staff have determined that lightweight units which weigh greater than or equal to 57 pounds remain a hazard and should still be included; units weighing less than 57 pounds when filled are not as hazardous. See Tab C and the Lightweight Unit discussion for details. (4) Clarification of volume criteria. See Tab C for details.

2022 CSU NPR	Staff's Draft Final Rule	Summary
closets, and single-compartment closed rigid boxes (storage chests).	on whether it meets this definition. Some products that, depending on their design, may not meet the criteria in this definition and, therefore, may not be considered clothing storage units are: shelving units, office furniture, dining room furniture, laundry hampers, built-in closets, and single-compartment closed rigid boxes (storage chests).	
(b) *Clothes locker* means a predominantly metal furniture item without exterior drawers and with one or more doors that either locks or accommodates an external lock.	(b) *Clothes locker* means a predominantly metal furniture item without exterior drawers and with one or more doors that either locks or accommodates an external lock.	No change.
(c) *Closed storage* means storage space inside a *drawer* and/or behind an opaque *door*. For this part, both sliding and hinged doors are considered in the definition of *closed storage*.	(c) *Closed storage* means storage space inside a *drawer* and/or behind an opaque *door*. For this part, both sliding and hinged doors are considered in the definition of *closed storage*.	No change.
(d) *Door* means a hinged furniture component that can be opened or closed, typically outward or downward, to form a barrier; or a sliding furniture component that can be opened or closed by sliding across the face or case of the furniture item. This does not include vertically opening hinged lids.	(d) *Door* means a hinged furniture component that can be opened or closed, typically outward or downward, to form a barrier; or a sliding furniture component that can be opened or closed by sliding across the face or case of the furniture item. This does not include vertically opening hinged lids.	No change.
(e) *Door extension from fulcrum distance* means the horizontal distance measured from the farthest point of a hinged door that opens outward or downward, while the door is in a position where the center of mass of the door is extended furthest from the front face of the unit (typically 90 degrees),	(e) *Door extension from fulcrum distance* means the horizontal distance measured from the farthest point of a hinged door that opens outward or downward, while the door is in ~~a position where the center of mass of the door is extended furthest from the front face of the unit~~ the least stable	Clarification of intent. The center of mass of the door does not need to be measured. See Door Position discussion.

2022 CSU NPR	Staff's Draft Final Rule	Summary
to the *fulcrum*, while the CSU is on a *hard, level, and flat test surface*. See Figure 1. Sliding doors that remain within the CSU case are not considered to have a door extension.	configuration (typically 90 degrees), to the *fulcrum*, while the CSU is on a *hard, level, and flat test surface*. See Figure 1. Sliding doors that remain within the CSU case are not considered to have a door extension.	
(f) *Drawer* means a furniture component intended to contain or store items that slides horizontally in and out of the furniture case and may be attached to the case by some means, such as glides.	(f) *Drawer* means a furniture component intended to contain or store items that slides horizontally in and out of the furniture case and may be attached to the case by some means, such as glides. Only components that are retained in the case when extended up to 2/3 the shortest internal length, when empty, are included in this definition.	In response to comments that storage bins should be excluded; bins may be excluded if they are not retained in the case when extended up to 2/3 the shortest internal length while empty. See Tab C for details.
	(g) *Extendable element* means a *drawer* or *pull-out shelf.*	Added definition of extendable element to improve readability. See Extendable Element discussion.
(g) *Drawer or pull-out shelf extension from fulcrum distance* means the horizontal distance measured from the centerline of the front face of the *drawer* or the outermost surface of the *pull-out shelf* to the *fulcrum*, when the *drawer* or *pull-out shelf* is at the *maximum extension* and the CSU is on a *hard, level, and flat test surface*. For a curved or angled surface this measurement is taken where the distance is at its greatest. See Figure 2.	(~~g~~h) ~~*Drawer or pull-out shelf*~~*Extendable element extension from fulcrum distance* means the horizontal distance measured from the centerline of the front face of the *drawer* or the outermost surface of the *pull-out shelf* to the *fulcrum*, when the ~~*drawer or pull-out shelf*~~*extendable element* is at the *maximum extension* and the CSU is on a *hard, level, and flat test surface*. For a curved or angled surface this measurement is taken where the distance is at its greatest. See Figure 2.	Replaced terms with extendable element.
(h) *Freestanding* means that the unit remains upright, without requiring attachment to the wall, when it is fully assembled and empty, with all extension elements closed. Built-in units or units intended to be permanently attached to the building structure, other than by tip restraints, are not	(~~h~~i) *Freestanding* means that the unit remains upright, without ~~requiring~~ needing attachment to the wall or other upright rigid structure, when it is fully assembled and empty, with all ~~extension~~ extendable elements and doors closed. Built-in units ~~or units intended to be permanently attached to the building structure, other than by tip restraints,~~ are not	Simplification based on comments. See Tab C for details.

2022 CSU NPR	Staff's Draft Final Rule	Summary
considered freestanding. Examples of units that are intended to be permanently installed include, but are not limited to, kitchen cabinets and bathroom vanities.	considered freestanding. ~~Examples of units that are intended to be permanently installed include, but are not limited to, kitchen cabinets and bathroom vanities.~~	
(i) *Functional volume* of a *drawer* or *pull-out shelf* means the interior bottom surface area multiplied by the effective *drawer*/*pull-out shelf* height, which is distance from the bottom surface of the *drawer*/*pull-out shelf* to the top of the *drawer*/*pull-out shelf* compartment minus 1/8 inches (see Figure 3a). *Functional volume* behind a *door* means the interior bottom surface area behind the *door*, when the *door* is closed, multiplied by the height of the storage compartment (see Figure 3b). *Functional volume* of *open storage* means the interior bottom surface area multiplied by the effective *open storage* height, which is distance from the bottom surface of the *open storage* to the top of the *open storage* compartment minus 1/8 inches.	(~~i~~j) *Functional volume* of ~~*a drawer or pull-out shelf*~~ *an extendable element* means the interior bottom surface area multiplied by the effective ~~*drawer/pull-out shelf*~~ *extendable element* height, which is distance from the bottom surface of the ~~*drawer/pull-out shelf*~~ *extendable element* to the top of the ~~*drawer/pull-out shelf*~~ *extendable element* compartment minus 1/8 inches (see Figure 3a). *Functional volume* behind a *door* means the interior bottom surface area behind the *door*, when the *door* is closed, multiplied by the height of the storage compartment (see Figure 3b). *Functional volume* of *open storage* means the interior bottom surface area multiplied by the effective *open storage* height, which is distance from the bottom surface of the *open storage* to the top of the *open storage* compartment minus 1/8 inches.	Replaced terms with extendable element.
(j) *Fulcrum* means the point or line at the base of the CSU about which the CSU pivots when a *tip-over force* is applied (typically the front feet).	(~~j~~k) *Fulcrum* means the point or line at the base of the CSU about which the CSU pivots when a *tip-over force* is applied (typically the front feet). The *fulcrum* position is determined while the CSU is on a *hard, level, and flat test surface* with all *doors* and *extendable elements* closed.	Change made in response to comments. Clarifies the fulcrum is a predetermined reference to make measurements easier. See Fulcrum discussion.
(k) *Hard, level, and flat test surface* means a test surface that is (1) sufficiently hard to not bend or break under the weight of a *clothing storage unit* and any loads associated with testing	(~~k~~l) *Hard, level, and flat test surface* means a test surface that is (1) sufficiently hard to not bend or break under the weight of a *clothing storage unit* and any loads associated with testing the unit; (2) level with no more	No change.

2022 CSU NPR	Staff's Draft Final Rule	Summary
the unit; (2) level with no more than 0.5 degrees of variation; and (3) smooth and even.	than 0.5 degrees of variation; and (3) smooth and even.	
(l) *Interlock* means a device that restricts simultaneous opening of *drawers*. An *interlock* may allow only one *drawer* to open at a time, or may allow more than one *drawer*, but fewer than all the *drawers*, to open simultaneously.	(~~l~~m) *Interlock* means a device(s) that restricts simultaneous opening of extendable elements or doors~~*drawers*. An *interlock* may allow only one *drawer* to open at a time, or may allow more than one *drawer*, but fewer than all the *drawers*, to open simultaneously~~.	Change made in response to comments. See Interlock discussion.
(m) *Levelling device* means an adjustable device intended to adjust the level of the clothing storage unit.	(~~m~~n) *Levelling device* means an adjustable device intended to adjust the level of the clothing storage unit.	No change.
(n) *Maximum extension* means a condition when a *drawer* or *pull-out shelf* is open to the furthest manufacturer recommended use position, as indicated by way of a stop. In the case of slides with multiple intermediate stops, this is the stop that allows the *drawer* or *pull-out shelf* to extend the furthest. In the case of slides with a multipart stop, such as a stop that extends the *drawer* or *pull-out shelf* to the furthest manufacturer recommended use position with an additional stop that retains the *drawer* or *pull-out shelf* in the case, this is the stop that extends the *drawer* or *pull-out shelf* to the manufacturer recommended use position. If the manufacturer does not provide a recommended use position by way of a stop, this is 2/3 the shortest internal length of the drawer measured from the inside face of the *drawer* front to the inside face of the *drawer*	(~~n~~o) *Maximum extension* means a condition when an extendable element ~~*drawer* or *pull-out shelf*~~ is open to the furthest manufacturer recommended use position, as indicated by way of a stop. In the case of slides with multiple intermediate stops, this is the stop that allows the extendable element ~~*drawer* or *pull-out shelf*~~ to extend the furthest. In the case of slides with a multipart stop, such as a stop that extends the extendable element ~~*drawer* or *pull-out shelf*~~ to the furthest manufacturer recommended use position with an additional stop that retains the extendable element ~~*drawer* or *pull-out shelf*~~ in the case, this is the stop that extends the extendable element ~~*drawer* or *pull-out shelf*~~ to the manufacturer recommended use position. If the manufacturer does not provide a recommended use position by way of a stop, this is 2/3 the shortest internal length of the *drawer* measured from the inside face of the *drawer* front to the inside face of the *drawer* back or 2/3 the shortest internal length of the *pull-out shelf*. See Figure 4.	Replaced terms with extendable element.

2022 CSU NPR	Staff's Draft Final Rule	Summary
back or 2/3 the length of the *pull-out shelf*. See Figure 4.		
(o) *Maximum handhold height* means the highest position at which a child may grab hold of the CSU. This includes the top of the CSU. This height is limited to a maximum of 4.12 feet from the ground, while the CSU is on a flat and level surface. See Figure 5.	(~~o~~p) *Maximum handhold height* means the highest position at which a child may grab hold of the CSU, measured while the CSU is on a *hard, level, and flat test surface*. For units shorter than 4.12 feet, ~~T~~this ~~includes~~ is the top of the CSU. For units ~~This height is limited to a maximum of~~ 4.12 feet or taller, this is 4.12 feet ~~from the ground, while the CSU is on a flat and level surface~~. See Figure 5.	Clarification that the surface is the defined hard, level, and flat test surface.
(p) *Moment* means a moment of a force, which is a measure of the tendency to cause a body to rotate about a specific point or axis. It is measured in pound-feet, representing a force multiplied by a lever arm, or distance from the force to the point of rotation.	(~~p~~q) *Moment* means a moment of a force, which is a measure of the tendency to cause a body to rotate about a specific point or axis. It is measured in pound-feet, representing a force multiplied by a lever arm, or distance from the force to the point of rotation.	No change.
(q) *Open storage* means storage space enclosed on at least 5 sides by a frame or panel(s) and/or behind a non-opaque door and with a flat bottom surface.	(~~q~~r) *Open storage* means ~~storage~~ space ~~enclosed on at least 5 sides by~~ within the frame of the furniture, that is open (*i.e.,* is not in a ~~frame~~ *drawer* or ~~panel(s~~behind an opaque *door*) and~~/or behind a non-opaque door and with~~ that can reasonably be used for storage (*e.g.* has a flat bottom surface). For example, open shelf space that is not behind a *door*, display space behind a non-opaque *door*, and framed open clothing hanging space are considered *open storage.*	Clarification; see Tab C.
(r) *Open space* means space enclosed within the frame or panels, but without a bottom surface. For example, under legs or between storage components, as with a vanity.	(~~r~~s) *Open space* means space ~~enclosed~~ within the frame ~~or panels~~ of the furniture, but without a bottom surface. For example, ~~under legs or~~ open space between legs, such as with a console table, or between separated storage components, such as with a vanity or a desk, are considered *open space*. This	Clarification; see Tab C.

2022 CSU NPR	Staff's Draft Final Rule	Summary
	definition does not include space inside the furniture case (e.g., space between a *drawer* and the case) or any other space that is not visible to a consumer standing in front of the unit (e.g., space behind a base panel).	
(s) *Portable storage closet* means a freestanding furniture item with an open frame that encloses hanging clothing storage space and/or shelves. This item may have a cloth case with curtain(s), flap(s), or door(s) that obscure the contents from view.	(~~s~~t) *Portable storage closet* means a freestanding furniture item with an open frame that encloses hanging clothing storage space and/or shelves. This item may have a cloth case with curtain(s), flap(s), or door(s) that obscure the contents from view.	No change.
(t) *Pull-out shelf* means a furniture component with a horizontal flat surface that slides horizontally in and out of the furniture case and may be attached to the case by some means, such as glides.	(~~t~~u) *Pull-out shelf* means a furniture component with a horizontal flat surface that slides horizontally in and out of the furniture case and may be attached to the case by some means, such as glides.	No change.
	(v) *Test block* means a block constructed of a rigid material such as steel or aluminum with the following minimum dimensions: at least 0.43 inch thick, at least 1 inch deep, at least 1 inch wide. See Figure 6.	Added definition of test block. The test block replaces the 1.5 degree test angle in the NPR. See the Carpet Angle discussion.
(u) *Tip over* means the point at which a *clothing storage unit* pivots forward such that the rear feet or, if there are no feet, the edge of the CSU lifts at least 1/4 inch from the floor and/or is supported by a non-support element.	(~~u~~w) *Tip over* means an event ~~the point~~ at which a *clothing storage unit* pivots forward to the point at which ~~such that the rear feet or, if there are no feet, the edge of~~ the CSU will continue to fall ~~lifts at least 1/4 inch from the floor~~ and/or ~~is~~ be supported by a non-support element.	Revised in response to comments. See the Tip Over discussion.
(v) *Tip-over force* means the force required to cause tip over of the clothing storage unit.	(~~v~~x) *Tip-over force* means the force required to cause tip over of the clothing storage unit.	No change.
(w) *Tip-over moment* means the minimum moment in pounds-feet about the *fulcrum* that causes *tip over*.	(~~w~~y) *Tip-over moment* means the minimum moment in pounds-feet about the *fulcrum* that causes *tip over*.	No change.

Section 3: Requirements for Interlocks

2022 CSU NPR	Staff's Draft Final Rule	Justification Summary
(a) General. For all *clothing storage units*, including consumer-assembled units, the *interlock* components must be pre-installed, and automatically engage when the consumer installs the *drawers* in the unit. All *interlocks* must engage automatically as part of normal use.	(a) General. For all *clothing storage units* with *interlocks*, including consumer-assembled units, the *interlock* components must be pre-installed, and automatically engage when the consumer installs the ~~*drawers*~~ *interlocked extendable element(s)* or *door(s)* in the unit. All *interlocks* must engage automatically as part of normal use.	Clarification in response to comments. See Interlock discussion.
(b) *Interlock* pull test.	(b) *Interlock* pull test.	No change.
(1) If the unit is not fully assembled, assemble the unit according to the manufacturer's instructions.	(1) If the unit is not fully assembled, assemble the unit according to the manufacturer's instructions.	No change.
(2) Place the unit on a *hard, level, and flat test surface*.	(2) Place the unit on a hard, level, and flat test surface.	No change.
(3) If the unit has a *levelling device*, adjust the *levelling device* to the lowest level; then adjust the *levelling device* in accordance with the manufacturer's instructions.	(3) If the unit has ~~a~~ one or more *levelling devices*, ~~adjust~~fully retract the *levelling device(s)* to the lowest level; then adjust the *levelling device(s)* in accordance with the manufacturer's instructions.	Clarification in response to comments. See Levelling discussion.
(4) Secure the unit to prevent sliding or *tip over*.	(4) Secure the unit, without interfering with the interlock function, to prevent sliding or *tip over*.	Clarification in response to comments. See Interlock discussion.
(5) Open any *doors* in front of the *interlocked drawers*.	(5) Open any non-interlocked *doors* that are in front of the interlocked ~~*drawers*~~ *extendable elements*.	Per comments, interlocks can affect extendable elements and doors. See Interlock discussion.
(6) Engage the *interlock* by opening a *drawer*, or the number of *drawers* necessary to engage the interlock, to the *maximum extension*.	(6) Engage the *interlock* by opening to the *maximum extension* ~~*a drawer*, or~~ the number of ~~*drawers*~~ *extendable elements or doors* necessary to engage the interlock~~, to the *maximum extension*~~.	Per comments, interlocks can affect extendable elements and doors. See Interlock discussion. Editorial change to move "to the maximum extension."
(7) Gradually apply over a period of at least 5 seconds a 30-pound horizontal pull force on each locked *drawer*, one *drawer* at a time, and hold the force for at least 10 seconds.	(7) Gradually apply over a period of at least 5 seconds a 30-pound horizontal pull force on each *interlocked extendable element or door* ~~locked *drawer*,~~ at the center of the pull area, one element ~~*drawer*~~ at a time, and hold the force for at least 10 seconds.	Per comments, interlocks can affect extendable elements and doors. Also per comments, clarifies where to pull on the interlocked element. See Interlock discussion.

2022 CSU NPR	Staff's Draft Final Rule	Justification Summary
(8) Repeat this test until all possible combinations of *drawers* have been tested.	(8) Repeat this test until all possible combinations of ~~*drawers*~~ *extendable elements* and *doors* have been tested.	Per comments, interlocks can affect extendable elements and doors. See Interlock discussion.
(c) During the testing specified in paragraph (b) of this section, if any locked *drawer* opens or the *interlock* is damaged, then the *interlock* will be disabled or bypassed for the stability testing in § 1261.4(c).	(c) ~~t~~The *interlock* will be disabled or bypassed for the stability testing in § 1261.4(c) if, as a result of ~~During~~ the testing specified in paragraph (b) of this section~~, if any locked *drawer* opens or the *interlock* is damaged, then:~~. (1) any *interlocked extendable element* extends during the test without retracting the originally open *extendable element* or *door*; or (2) any *interlock* or *interlocked extendable element* or *door* is damaged or does not function as intended after the test.	Allows additional interlock designs, per comments. See Interlock Discussion.

Section 4: Requirements for Stability

2022 CSU NPR	Staff's Draft Final Rule	Justification Summary
(a) *General*. *Clothing storage units* shall be configured as described in paragraph (b) of this section, and tested in accordance with the procedure in paragraph (c) of this section. *Clothing storage units* shall meet the requirement for tip-over stability based on the minimum *tip-over moment* as specified in paragraph (d) of this section.	(a) *General*. *Clothing storage units* shall be configured as described in paragraph (b) of this section, and tested in accordance with the procedure in paragraph (c) of this section. *Clothing storage units* shall meet the requirement for *tip-over* stability based on the ~~minimum~~ *tip-over moment* as specified in paragraph (d) of this section.	Editorial. "Minimum" is redundant based on the definition of tip-over moment.
(b) *Test Configuration*: The *clothing storage unit* used for tip-over testing shall be configured in the following manner:	(b) *Test Configuration*: The *clothing storage unit* used for tip-over testing shall be configured in the following manner:	No change.
(1) If the unit is not fully assembled, assemble the unit according to the manufacturer's instructions.	(1) If the unit is not fully assembled, assemble the unit according to the manufacturer's instructions. Units shall not be attached to the wall or any upright structure for testing.	Per public comments, some manufacturers' instructions say to mount to the wall using a tip restraint, which is not the intended test setup. See Assembly Instructions discussion.
(2) Place the unit on a *hard, level, and flat test surface*.	(2) Place the unit on a *hard, level, and flat test surface* in the orientation most likely to cause *tip over*. If necessary, secure the unit from sliding without preventing *tip over*.	Per public comments. This change will address over-estimates of stability based on orientation on the test surface. See Placement Orientation discussion.

2022 CSU NPR	Staff's Draft Final Rule	Justification Summary
(3) If the unit has a *levelling device*, adjust the *levelling device* to the lowest level; then adjust the *levelling device* in accordance with the manufacturer's instructions.	(3) If the unit has ~~a~~ one or more *levelling devices*, ~~adjust~~fully retract the *levelling device(s)* to the lowest level; then adjust the *levelling device(s)* in accordance with the manufacturer's instructions.	Clarification in response to comments. See Levelling discussion.
	(4) Record the *maximum handhold height*, the longest *extendable element extension from fulcrum distance*, and the longest *door extension from fulcrum distance*, as applicable. These measurements are used in § 1261.4(d).	Clarification in response to public comments. This change clarifies when key measurements to the fulcrum are made. See Fulcrum discussion.
(4) Tilt the CSU forward to 1.5 degrees by one of the following methods: (i) Raise the rear of the unit until the unit has a 1.5-degree forward tilt, or (ii) Place the unit on a hard and flat 1.5-degree inclined surface, with the high point at the rear of the unit surface, or (iii) Other means to achieve a 1.5-degree forward tilt.	(~~4~~5) Tilt the *clothing storage unit* ~~CSU~~ forward by placing the *test block(s)* under the unit's most rear floor support(s) such that either the entire floor support contact area is over the *test block(s)* or the back edge of the *test block(s)* is aligned with the back edge of the rear floor supports. ~~to 1.5 degrees by one of the following methods:~~ ~~(i) Raise the rear of the unit until the unit has a 1.5-degree forward tilt, or~~ ~~(ii) Place the unit on a hard and flat 1.5-degree inclined surface, with the high point at the rear of the unit surface, or~~ ~~(iii) Other means to achieve a 1.5-degree forward tilt.~~	In response to public comments, the 1.5 degree angle is replaced with a test block that is at least 0.43 inches tall. See the Carpet Angle discussion.
(5) If the CSU has a *levelling device* intended for a carpeted surface, adjust the level in accordance with the manufacturer's instructions for a carpeted surface.	~~(5) If the CSU has a *levelling device* intended for a carpeted surface, adjust the level in accordance with the manufacturer's instructions for a carpeted surface.~~	Removed based on public comments. See Leveling for a Carpeted Surface discussion.
(6) Open all hinged *doors* that open outward or downward to the position where the center of mass of the *door* is extended furthest from the front face of the unit (typically 90 degrees).	(6) Disable or bypass any *interlock(s)* as necessary per §1261.3(c). (7) Open all hinged *doors* that open outward or downward that are not locked by an interlock system to the least stable configuration ~~position where the center of mass of the *door* is extended furthest from the front face of the unit~~ (typically 90 degrees).	Per comments, interlocks can affect extendable elements and doors. Also, there may be more than one interlock. See Interlock discussion. Clarification of intent. The center of mass of the door does not need to be measured. See Door Position discussion.

2022 CSU NPR	Staff's Draft Final Rule	Justification Summary
(7) For units without an *interlock*: (i) Open all *drawers* and *pull-out shelves* to *the maximum extension*. (ii) Place a fill weight in the center of each *drawer* or *pull-out shelf* consisting of a uniformly distributed mass in pounds that is 8.5 (pounds/cubic foot) times the *functional volume* (cubic feet).	~~(7) For units without an *interlock*:~~ ~~(i) Open all drawers and pull-out shelves to the maximum extension.~~ ~~(ii) Place a fill weight in the center of each *drawer* or *pull-out shelf* consisting of a uniformly distributed mass in pounds that is 8.5 (pounds/cubic foot) times the *functional volume* (cubic feet).~~	This language is redundant with the NPR requirements for units with an interlock. See the discussion in the Requirements for Fill Weights section on Redundant Language.
(8) For units with an *interlock*: (i) If, during the testing specified in §1261.3(b), any locked *drawer* opens or the *interlock* is damaged, then disable or bypass the *interlock* for the stability testing required in this section, and follow the requirements for units without an interlock. (ii) If, during the testing specified in XXXX.3(b), no locked *drawer* opens and the *interlock* is not damaged, then: (A) Open all *drawers* that are not locked by the *interlock* system to the *maximum extension*, in the configuration most likely to cause tip over (typically the configuration with the largest *drawers* in the highest position open). (B) If 50% or more of the *drawers* and *pull-out shelves* by *functional volume* are open, place a fill weight in the center of each *drawer* or *pull-out shelf*, including those that remain closed (see Figure 6a), consisting of a uniformly distributed mass in pounds that is 8.5 (pounds/cubic foot) times the *functional volume* (cubic feet). Secure the fill weights to prevent sliding. (C) If less than 50% of the *drawers* and *pull-out shelves* by *functional volume* are open, do not place a fill weight in any *drawers* or on *any pull-out shelves* (see Figure 6b).	(8) ~~For units with an *interlock*.~~ ~~(i) If, during the testing specified in § 1261.3(b), any locked drawer opens or the interlock is damaged, then disable or bypass the interlock for the stability testing required in this section, and follow the requirements for units without an interlock.~~ ~~(ii) If, during the testing specified in XXXX.3(b), no locked drawer opens and the interlock is not damaged, then:~~ (~~A)~~ Open all ~~*drawers*~~*extendable elements* that are not locked by the *interlock* system to the *maximum extension*, in the configuration most likely to cause tip over (typically the configuration with the largest *drawers* in the highest position open). Then place fill weights according to the following criteria: (~~B~~i)If 50% or more of the ~~*drawers and pull-out shelves*~~ *extendable elements* by *functional volume* are open, place a fill weight in the center of the bottom surface of each ~~*drawer or pull-out shelf*~~ *extendable element*, including those that remain closed (see Figure ~~6~~7a), consisting of a uniformly distributed mass in pounds. The fill weight in open *extendable elements* must be ~~that is~~ at least 8.5 (pounds/cubic foot) times the *functional volume* (cubic feet). The fill weight in	Simplification of the language regarding bypassing the interlock. See the discussion in the Requirements for Fill Weights section on Redundant Language. Per comments, interlocks can affect extendable elements and doors. Also, there may be more than one interlock. See Interlock discussion. Per comments, clarification on the placement of the fill. See the discussion on Fill Weight Placement.

2022 CSU NPR	Staff's Draft Final Rule	Justification Summary
	closed *extendable elements* must be no more than 8.5 (pounds/cubic foot) times the *functional volume*. If necessary, ~~S~~secure the fill weights to prevent sliding. (~~C~~ii) If less than 50% of the ~~*drawers* and *pull-out shelves*~~ *extendable elements* by *functional volume* are open, do not place a fill weight in ~~any *drawers*~~ or on any ~~*pull-out shelves*~~ *extendable elements* (see Figure ~~6~~7b).	Clarification that 8.5 pounds per cubic foot is a minimum fill weight. See the discussion on Fill Weight Amount. Clarification that securement of the fill weight is only if necessary. See the discussion on Fill Weight Securement.
(c) *Test Procedure to Determine Tip-over Moment of the Unit*: Perform one of the following two tip-over tests (Test Method 1 or Test Method 2), whichever is the most appropriate for the unit:	(c) Test Procedure to Determine Tip-over Moment of the Unit: Perform one of the following two tip-over tests (Test Method 1 or Test Method 2), whichever is the most appropriate for the unit:	No change.
(1) Test Method 1 can be used for units with *drawers* or *pull-out shelves*. Gradually apply over a period of at least 5 seconds a vertical force to the face of the uppermost extended *drawer/pull-out shelf* of the unit to cause the unit to *tip over*. Record the *tip-over force* and horizontal distance from the force application point to the *fulcrum*. Calculate the *tip-over moment* of the unit by multiplying the tip-over force (pounds) by the horizontal distance from the force application point to the fulcrum (feet). NOTE: If a *drawer* breaks during the test due to the force, use Test Method 2 or secure or reinforce the drawer, as long as the modifications do not increase the tip-over moment.	(1) Test Method 1 shall ~~can~~ be used for units with *extendable elements* that extend at least 6 inches from the *fulcrum* ~~*drawers* or *pull-out shelves*~~. Record the horizontal distance from where the center of force will be applied (the center of gravity of the weights to be applied) to the *fulcrum*. Gradually apply over a period of at least 5 seconds ~~a vertical force~~ weights to the face of ~~the uppermost~~ an extended ~~*drawer/pull-out shelf*~~ *extendable element* of the unit to cause the unit to *tip over*. Record the *tip-over force* ~~and horizontal distance from the force application point to the *fulcrum*~~. Calculate the *tip-over moment* of the unit by multiplying the *tip-over force* (pounds) by the horizontal distance from the center of force application ~~point~~ to the *fulcrum* (feet). ~~NOTE: If a drawer breaks during the test due to the force, use Test Method 2 or secure or reinforce the drawer, as long as the modifications do not increase the tip-over moment.~~	Clarification of test applicability. Clarification of when to measure to the fulcrum. Must use weights to apply a force. New section on repairs or other modifications added. See discussion of changes to Test Method 1 for details of all recommended changes.
(2) Test Method 2 can be used for any unit. Gradually apply over a period of at least 5 seconds a	(2) Test Method 2 shall ~~can~~ be used for any unit for which Test Method 1 does not apply.	Clarification of test applicability.

2022 CSU NPR	Staff's Draft Final Rule	Justification Summary
horizontal force to the back of the unit orthogonal to the *fulcrum* to cause the unit to tip over. Record the force and the vertical distance from the force application point to the *fulcrum*. Calculate the *tip-over moment* of the unit by multiplying the *tip-over force* (pounds) by the vertical distance from the force application point to the fulcrum (feet).	Record the vertical distance from where the center of force will be applied to the fulcrum. Gradually apply over a period of at least 5 seconds a horizontal force to the ~~back of the~~ unit orthogonal to the *fulcrum* to cause the unit to *tip over*. Record ~~the force and the vertical distance from~~ the *tip-over force* ~~application point to the *fulcrum*~~. Calculate the *tip-over moment* of the unit by multiplying the *tip-over force* (pounds) by the vertical distance from the center of force application ~~point~~ to the fulcrum (feet).	Clarification of when to measure to the fulcrum. See discussion of changes to Test Method 2 for details of all recommended changes.
	(3) If a failed component prohibits completion of the test, then to continue testing, the failed component(s) must be repaired or replaced to the original specifications, or the component replaced and the test repeated with the failed component secured to prevent the component from failing, as long as the modifications do not increase the *tip-over moment*.	Use repair language consistent with ASTM F2057 – 19 to clarify potential repairs. See discussion of repairs in Changes to Test Method 1 and Test Method 2.
(d) Performance requirement: The *tip-over moment* of the *clothing storage unit* must be greater than the threshold moment, which is the greatest of all of the following applicable moments: (1) [for units with a *drawer(s) or pull-out shelf(ves)*] 55.3 pounds times the *drawer or pull-out shelf extension from fulcrum distance* in feet + 26.6 pounds feet; (2) [for units with a *door(s)*] 51.2 pounds times the *door extension from fulcrum distance* in feet – 12.8; and (3) [for all units] 17.2 pounds times *maximum handhold height* in feet.	d) *Performance requirement:* The *tip-over moment* of the *clothing storage unit* must be greater than the threshold moment, which is the greatest of all of the following applicable moments: (1) [for units with *extendable elements* ~~*a drawer(s) or pull-out shelf(ves)*~~] 55.3 pounds times the ~~*drawer or pull-out shelf*~~ *extendable element extension from fulcrum distance* in feet + 26.6 pounds feet; (2) [for units with a *door(s)*] 51.2 pounds times the *door extension from fulcrum distance* in feet – 12.8 *pounds feet*; and (3) [for all units] 17.2 pounds times *maximum handhold height* in feet.	Replaced terms with extendable element. Editorial change to list units.

This page intentionally left blank.

Tab E: Draft Final Rule (FR) Hang Tag Memorandum

This page intentionally left blank.

United States
Consumer Product Safety Commission

Memorandum

TO: The File

DATE: September 28, 2022

THROUGH: Mark Kumagai, Associate Executive Director, Directorate for Engineering Sciences

FROM: Rana Balci-Sinha, Ph.D., Director, Division of Human Factors, Directorate for Engineering Sciences

Kristen Talcott, Ph.D., Human Factors Engineer, Division of Human Factors, Directorate for Engineering Sciences

SUBJECT: Hang Tag Memorandum

Background

The notice of proposed rulemaking (NPR) for clothing storage units (CSUs) included requirements for manufacturers to provide performance and technical data, using a hang tag, with every CSU. The hang tag provides consumers at the point of sale with comparative technical information about the stability of the unit, based on the specific tip-over-testing protocol in the NPR. This hang tag requirement was proposed under Section 27(e) of the Consumer Product Safety Act (CPSA), which authorizes the Commission to require, by rule, that manufacturers of consumer products provide to the Commission performance and technical data related to performance and safety as may be required to carry out the purposes of the CPSA, and to give notification of such performance and technical data at the time of original purchase to prospective purchasers and to the first purchaser of the product.[1]

In the NPR, the Commission proposed to require CSUs to meet a minimum level of stability, based on required testing; however, above that minimum level, CSUs may have varying levels of stability. As staff discussed in the NPR briefing package, the hang tag would assist consumers in evaluating the comparative safety of CSUs by informing them about the stability of a particular CSU, so that they can compare the relative stability of products and make informed buying decisions.

CPSC received numerous comments on the proposed hang tag. In this memorandum, staff summarizes the hang tag requirements in the NPR, summarizes relevant comments, and

[1] 15 U.S.C. 2076(e). Section 2 of the CPSA provides that one purpose of the CPSA is to "assist consumers in evaluating the comparative safety of consumer products." *Id*. 2051(b)(2).

U.S. Consumer Product Safety Commission
4330 East-West Highway
Bethesda, MD 20814

National Product Testing & Evaluation Center
5 Research Place
Rockville, MD 20850

cpsc.gov

provides updated hang tag recommendations. Staff's detailed responses to all public comments can be found in Tab K.

Discussion

Hang Tag Requirements in the NPR

In Tab E of the NPR briefing package,[2] staff provided the rationale and recommended requirements for the hang tag, which included requirements for size; content, including a graphic label with a rating scale and an explanation of the stability rating; format; attachment; and placement.

The NPR specified that the size of the hang tag is at least 5-inches wide by 7-inches tall. The requirements for content included specific components of a graphic label with a 5-point rating scale that displays the ratio of tip-over moment determined through stability testing. The rating scale used a ratio of tested moment to the threshold moment to provide a simple calculation that results in a number, equal to or greater than 1, which can be easily represented on a scale. The minimum rating permissible under the stability testing criteria in the NPR was a 1. Therefore, for example, a rating of 2 means the unit can withstand twice the minimum moment. The content also includes specific explanatory language for the rating scale.

The requirements for format included specific layout and colors. The attachment requirements specified that the hang tag be attached to the CSU and clearly visible to a person standing in front of the unit, at the time of original purchase. The placement requirements specified that the hang tag appear on the product and on the immediate container of the product in which the product is normally offered for sale at retail. Staff recommended requiring ready-to-assemble furniture to display the same information as the hang tag, with the same size and format, on the main panel of consumer-level packaging.

For a detailed discussion of the contents, rationale, and purpose of the hang tag and associated requirements, see Tab E of the NPR briefing package.

NPR Comments and Recommendations

Staff's full response to comments on the hang tag is provided in Tab K. Below, staff summarizes relevant comments that led to updated recommendations for the final rule:

[2] NPR can be accessed at https://www.cpsc.gov/s3fs-public/Proposed%20Rule-%20Safety%20Standard%20for%20Clothing%20Storage%20Units.pdf

General

Although staff identified some comments that disagreed with including a hang tag and with fundamental components of the hang tag, such as the comparative rating scale, staff continues to recommend a hang tag that will provide comparative performance and technical data on CSU stability to consumers. Staff assess that this information is important for consumers to make informed comparisons about the stability of a CSU when buying. In addition, the hang tag will incentivize manufacturers to build CSUs that are more resistant to tip over, and thus, further reduce the risk of serious injury and death from tip over.

Content

- **Stability rating explanation:** Based on various comments suggesting that the rating scale and the context should be explained in a more direct way, staff recommends adding a brief explanation of the rating to the front of the tag, as shown in Figure 1. The purpose of this revision is to make it easier for consumers to see the meaning of the stability rating at a first glance on the front of the hang tag. This explanation is in the form of one sentence placed next to the rating scale and states: "This unit is [MANUFACTURER TO ENTER THE RATING VALUE] times more stable than the minimum required."

- **Rating scale.** Various commenters stated that products currently on the market would have a rating of less than 2, after making modifications to comply with the NPR, and ratings of 3, 4, or 5 are unreasonable to include on the scale and potentially confusing to consumers looking for products with these higher ratings. Based on CPSC's testing, and information provided in the comments, most CSUs on the market, once they are modified to meet the standard, would not exceed a stability rating of 2. Staff recommends narrowing the scale to a maximum of 2, based on the products on the market that will need modifications to reach a rating of 1, and the low likelihood that products will reach a rating of 2 in the near term.

  Staff also would like to clarify that the word underneath the minimum acceptable rating of 1 is MIN, signifying that 1 is the minimum rating for stability; staff also recommends using "OR MORE" underneath 2, to signify that the stability ratings more than 2 can be indicated on the scale with number 2. This allows for CSUs that exceed a rating of 2, since that is the highest rating industry members currently expect to achieve. If more products in the future achieve ratings higher than 2, the Commission can propose to change the scale under Section 27(e) procedures. Some commenters suggested that CPSC use whole numbers without decimals; although staff agrees that the data suggest that consumers prefer whole number scales, staff's intent is to provide the rating as is (*e.g.*, without multiplying it by 10), so that consumers can interpret the meaning as directly as possible. Therefore, staff does not recommend making a change in the proposed rating scale, calculated ratio to one significant digit (*e.g.*, X.Y). A commenter raised that there were discrepancies in the rounding requirements for the rating calculation. To address the

rounding requirement comment, staff recommends adding "one significant digit (*e.g.*, X.Y)" to the regulatory text describing the ratio of tip-over moment in section (a)(2)(v).

Placement

- Staff identified several substantive comments concerning the placement of hang tags. Based on review of these comments, staff does not recommend any changes to the requirements in the NPR for placement of the hang tag on the product, and on the immediate container of the product in which the product is normally offered for sale at retail. However, numerous commenters suggested that the point of purchase includes online sales, and consumers should be able to review stability ratings while purchasing products online. These comments highlighted that the hang tag information should be provided on online sales pages and on websites, because consumers make purchase decisions there, as well as in physical stores, and they need the information at that point for comparison. Based on these comments, staff recommends revising the requirement to reflect that the point of purchase may include online purchases, by requiring that the hang tag be displayed on the websites that enable consumers to purchase a product online. Consistent with the limitations under section 27(e) of the CPSA, this recommended requirement would be limited to manufacturer (or importer) websites that allow for consumer purchase of the product.
- Staff recommends that the online hang tag be in the form of a "virtual" hang tag, with both front and back sides visible to the consumer as they appear on the product and on packaging. Modifications to size requirements for online hang tags are explained below. The purpose of this requirement is to ensure that consumers who purchase CSUs online will be able to assess the stability ratings of the products that they are considering, similar to the hang tag shown on the product itself, or in its immediate container sold at brick-and-mortar stores during the time of original purchase. In the draft FR regulatory language, in Tab G, staff clarifies that "time of original purchase" includes in stores and online, and applies to online sales by "manufacturers," which includes importers; retailers are also included if they are also manufacturers or importers.
- This requirement for display on websites is similar to certain appliances that require manufacturers to disclose a product's annual energy cost or efficiency information — based on Department of Energy (DOE) test procedures — on EnergyGuide labels. This requirement applies only to websites and print catalogs that contain the terms of sale, retail price, and ordering instructions for consumers.[3]
- To ensure consumers will see the hang tag information at the time they are making buying decisions online, staff recommends that the manufacturer of the CSU who advertises the product on an online sales interface (*e.g.*, website or app) must disclose clearly and

[3] Federal Trade Commission (2013) EnergyGuide Labeling: FAQs for Appliance Manufacturers. Accessed at https://www.ftc.gov/business-guidance/resources/energyguide-labeling-faqs-appliance-manufacturers.

conspicuously, on the online sales interface of the product from which the consumer may make the purchase, all of the information on the product's hang tag by showing an image of the hang tag's front and reverse sides. Staff recommends requiring the stability rating to be displayed close to the product's price on the page that contains the detailed description of the product to ensure that consumers will be able to see the information at the time they are making purchase decisions, and that the hang tag information will not be buried in less visible places of the interface. This is consistent with the purpose of this requirement, as stated in the NPR, to ensure consumers can see the hang tag information when making a purchase decision. Staff also recommends requiring that manufacturers display the stability rating of the product in a font size equivalent to that of the price so that it will be visible to consumers. Because of the large amount of content in the hang tag, and the importance of this information being visible near the price, so that consumers will notice it, staff recommends allowing the hang tag information to be provided via a link accessible through one user action *(e.g.*, mouse click, mouse roll-over, or tactile screen expansion) on the stability rating image. This will provide the information to consumers in a visible location, while accommodating the need for other website information about the product. Staff's recommendations are in line with other similar requirements implemented for the EnergyGuide label on a website discussed above, as well as the European Union energy label requirements on the Internet.[4] Staff assesses that the recommendations for the online version of the hang tag aims to achieve the same goals as the physical hang tag, which are to ensure that consumers can make informed comparisons about the stability of a CSU during the buying process. With the recommended size and location requirements similar to a retail store, consumers will be able to notice the rating easily, and become informed about the details of the rating, by reviewing the identical hang tag provided online.

Other

- Staff also corrects some grammatical errors on the reverse side of the hang tag. These revisions do not alter the substance of the requirements.

[4] European Commission (n.d.) Internet Labelling - Nested Display Arrows For Labels Available: https://ec.europa.eu/energy/eepf-labels/label-type/internet-labels. Accessed on August 15, 2022.

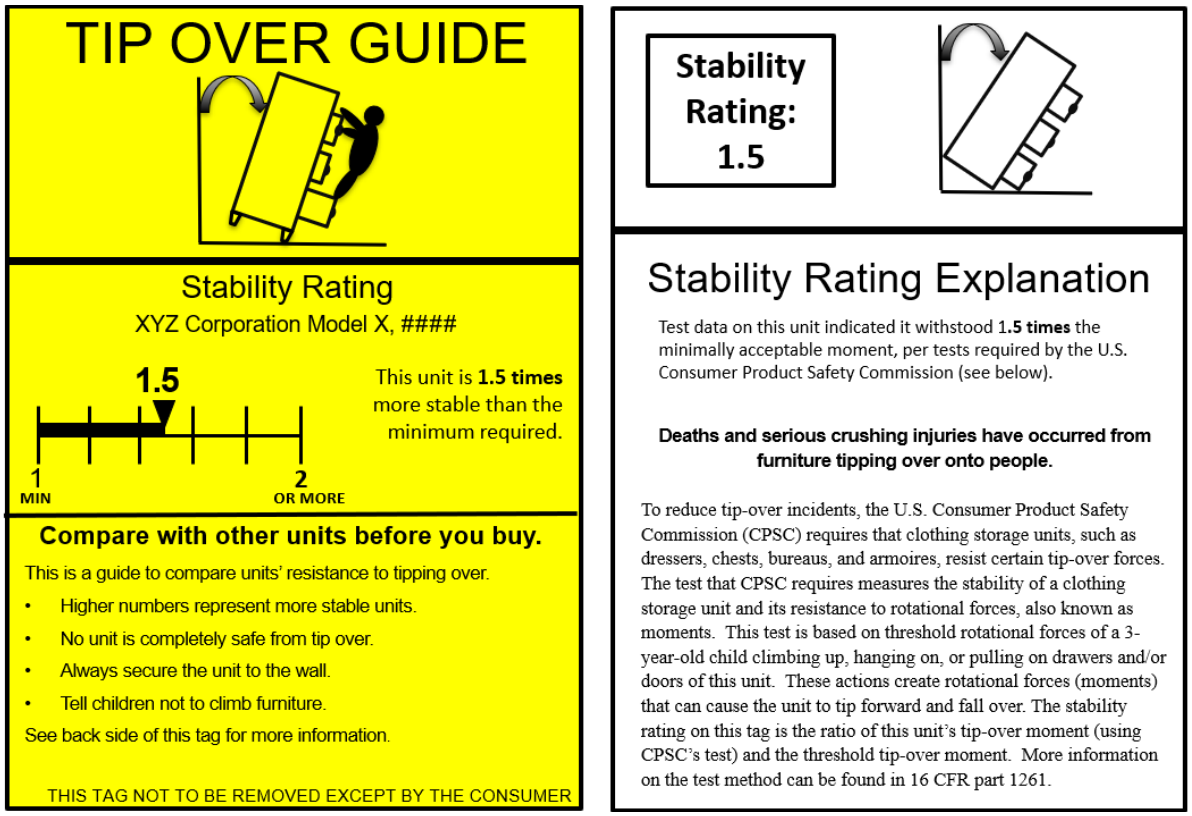

Figure 1. Hang tag example shown for a unit with a stability rating of 1.5 (front and back).

TAB F: Analysis of Voluntary Standards for Clothing Storage Units

This page intentionally left blank.

United States
Consumer Product Safety Commission

Memorandum

TO: Kristen Talcott, Ph.D., Project Manager
Division of Human Factors
Directorate for Engineering Sciences

DATE: September 28, 2022

THROUGH: Andrew G. Stadnik, P.E., Associate Executive Director,
Directorate for Laboratory Sciences

Michael Nelson, Director,
Laboratory Sciences Mechanical Engineering Division,
Directorate for Laboratory Sciences

FROM: Benjamin Mordecai, Mechanical Engineer,
Laboratory Sciences Mechanical Engineering Division,
Directorate for Laboratory Sciences

Adam Howie, Mechanical Engineer
Laboratory Sciences Mechanical Engineering Division,
Directorate for Laboratory Sciences

SUBJECT: Analysis of Voluntary Standards for Clothing Storage Units

---

I. Background

This memorandum updates Laboratory Sciences Mechanical Engineering Division (LSM) staff's analysis in the Notice of Proposed Rulemaking (NPR) briefing package of voluntary and international standards that are relevant to clothing storage unit (CSU) tip overs.[1] In that memorandum, LSM staff provided an overview of the primary U.S. voluntary standard, ASTM F2057, *Standard Consumer Safety Specification for Clothing Storage Units*. In the analysis, staff assessed the adequacy of the current version of the standard, ASTM F2057 – 19, to protect consumers against the tip over of CSUs. Staff also analyzed three other international consumer safety specifications relevant to CSU tip over and one additional American standard for interlocks[2]:

[1] CPSC Staff. (2021). Staff Briefing Package: Draft Notice of Proposed Rulemaking for Clothing Storage Units. U.S. Consumer Product Safety Commission, Bethesda, MD. Available at: https://cpsc.gov/s3fs-public/Proposed%20Rule-%20Safety%20Standard%20for%20Clothing%20Storage%20Units.pdf.
[2] Tab F of the NPR briefing package explained that there is an additional standard, ASTM F3096 – 14, Standard Performance Specification for Tipover Restraint(s) Used with Clothing Storage Unit(s), which is also relevant to CSU tip overs. However, in the NPR briefing package and this briefing package, staff did

U.S. Consumer Product Safety Commission
4330 East-West Highway
Bethesda, MD 20814
cpsc.gov

National Product Testing & Evaluation Center
5 Research Place
Rockville, MD 20850

- AS/NZS 4935:2009, the Australian/New Zealand Standard for Domestic furniture – Freestanding chests of drawers, wardrobes and bookshelves/bookcases – determination of stability;
- ISO 7171 (2019), the International Organization for Standardization International Standard for Furniture – Storage Units – Determination of stability;
- EN14749 (2016), the European Standard, European Standard for Domestic and kitchen storage units and worktops – Safety requirements and test methods; and
- ANSI/BIFMA X6.5-2008 (R2013), Small Office/Home Office Furniture – Tests American National Standard for Office Furnishings.

As part of the standards assessment in the NPR, that memorandum discussed the hazard patterns identified by incident reports and testing, such as, child interactions, multiple open and filled drawers, and carpeted surfaces. Staff also provided information on whether the units involved in fatal and nonfatal CSU tip-over incidents met the stability requirements in ASTM F2057 – 19. Staff concluded that none of the standards listed above adequately addressed the identified hazard patterns. For the detailed information and assessment provided in that memorandum, see Tab F of the NPR briefing package.

II. Standards Activity Since the NPR

ASTM F2057 – 19 is still the current version of the ASTM standard. However, at the November 2021 ASTM F15.42 Furniture Subcommittee meeting, subcommittee members started discussion on possible changes to the stability requirements and associated test methods in F2057. These changes to the stability requirements and test methods were discussed, along with changes to other sections of the standard that had been in-work at the time staff prepared the NPR briefing package. In the subsequent months, ASTM members refined the proposed language and added additional technical detail. ASTM balloted most of the possible changes in early May 2022 (Items 1-8 in F15 (22-06)). Additional possible changes were balloted in late May 2022 (Item 1 in F15 (22-07)), and July 2022 (Items 1-8 in F15 (22-11)). A summary of the ballot items and CPSC staff vote is provided in Appendix F1.

The possible changes to the stability requirements and associated tests, compared to the current stability requirements and tests, are summarized in Table 1, though staff does not know if, or when, or in what form, any updated standard will be published.

not evaluate that standard because it only addresses tip restraints, and staff recommends requiring inherent stability for CSUs for reasons discussed in the NPR briefing package.

Table 1. Summary of Stability Tests in ASTM F2057 – 19 and Possible Changes

Section	ASTM F2057 – 19	Possible Changes
7.1	• CSU on a flat level surface • All extendable elements (drawers and pullout shelves) and doors open • No fill weight in extendable elements • No additional force	• CSU on a flat level surface • All extendable elements and doors open* • Extendable elements loaded with 8.5 pounds per cubic foot of their volume (fill weight),** space behind doors loaded with 8.5 pounds per cubic foot of half of their volume • No additional force
7.2	• CSU on a flat level surface • One extendable element open • No fill weight in extendable elements • 50-pound weight applied to face of open extendable element	• Back feet of CSU on 0.43-inch block • All extendable elements and doors open* • No fill weight in extendable elements • 60-pound weight applied to face of open extendable element
New test	N/A	• CSU on a flat level surface • All extendable elements and doors open* • No fill weight in extendable elements • 10-pound outward horizontal force applied to highest reach point 56 inches or below

*Except those that are interlocked with an interlock that meets specified requirements, including a 30-pound pull test.
** Interlocked extendable elements are only loaded with a fill weight if 50% or more, by volume, are open.

Staff conducted a preliminary assessment of the possible stability requirements in the draft standard and identified several concerns, including:

- Stability tests do not simulate multiple simultaneous factors that are demonstrated to decrease stability and to exist simultaneously during known incidents—*i.e.*, multiple open/filled drawers, carpet, and forces from children's dynamic interactions.
- A 60-pound test weight does not equate to protecting a 60-pound child because children generate forces greater than their weight when climbing a CSU. The possible stability test in the potential new ASTM standard substantially underestimates the forces generated during child-climbing interactions. Incident data show climbing interactions to be among the most common interactions during incidents.
- The 10-pound outward horizontal force is lower than the demonstrated child pull strength.

Staff assesses that these changes, if enacted, would not adequately address the hazards because they fail to address multiple real-world conditions simultaneously; and they fail to apply an adequate tipping moment to the CSU to simulate the interactions seen in the hazard patterns, based on the climbing forces identified by the UMTRI Study and pull forces in child strength literature. Staff has also expressed concern with other balloted changes to the standard, including changes relating to warning labels, scope and definitions, and requirements

for interlocks. CPSC staff's statements provided to ASTM with the negative votes are set forth in Appendix F2.

As of September 28, 2022, ASTM has not published a new version of the standard. As such, the staff's assessment of ASTM F2057 – 19 in Tab F of the NPR briefing package, and the reasons discussed in that memorandum for why the standard is not likely to adequately reduce the risk of injury associated with CSU tip overs remains the same.

On April 5, 2022, ANSI/BIFMA published a new version of the standard, X6.5-2022 Home Office and Occasional-Use Table and Storage Products, replacing ANSI/SOHO S6.5 (R2013). Numerous changes were introduced; however, staff determined that, like the previous version of the standard, the interlock strength test requirements section was the main section relevant to CSU stability.[3] Staff reviewed the interlock strength test methods in the new version of the standard and found them to be identical to the previous version, which is discussed in detail in staff's NPR briefing package. Although staff's assessment of these requirements concluded that they were effective for interlocks, because the standard, as a whole, does not address CSU instability, it would not adequately reduce the risk of injury associated with CSU tip overs.

Staff is not aware of any changes to the other analyzed standards:

- AS/NZS 4935:2009, the Australian/New Zealand Standard for Domestic furniture – Freestanding chests of drawers, wardrobes and bookshelves/bookcases – determination of stability;
- ISO 7171 (2019), the International Organization for Standardization International Standard for Furniture – Storage Units – Determination of stability;
- EN14749 (2016), the European Standard, European Standard for Domestic and kitchen storage units and worktops – Safety requirements and test methods.

Staff's analysis of the content and adequacy of these standards remains the same as that in the NPR briefing package. See Tab F of the NPR briefing package for a detailed explanation of why these standards are not likely to adequately reduce the risk of injury associated with CSU tip overs.[4]

[3] Staff also reference other parts of the standard in the analyses in Tabs C (definition of "extendible element") and Tab D (definition of "tip over" and "furniture stability" tests that apply a horizontal load in sections 4.9 and 4.10).
[4] Sanborn, M., Mordecai, B., Howie, A. (2021.) TAB F: Analysis of Voluntary Standards for Clothing Storage Units. Staff Briefing Package: Draft Notice of Proposed Rulemaking for Clothing Storage Units. U.S. Consumer Product Safety Commission, Bethesda, MD. Available at: https://cpsc.gov/s3fs-public/Proposed%20Rule-%20Safety%20Standard%20for%20Clothing%20Storage%20Units.pdf.

III. Incident Unit Compliance with ASTM F2057

In the NPR briefing package, staff looked at whether CSUs involved in tip-over incidents complied with ASTM F2057 – 19 because that indicates whether ASTM F2057 – 19 is effective at preventing tip overs, and, by extension, whether the standard is adequate. Staff assessed compliance with F2057 – 19 because, although units involved in incidents may have predated that edition of the standard, the purpose of this assessment was to determine whether a unit that complies with F2057 – 19 could still be involved in a tip-over incident. If so, this suggests that ASTM F2057 – 19 does not adequately address the tip over hazard. This memorandum includes an updated assessment of whether CSUs involved in tip-over incidents comply with ASTM F2057 – 19, based on incidents identified after the NPR briefing package. The data analyzed here are a subset of the data presented in Tab A of this briefing package, and the data include only incidents in which children's interactions caused a CSU to tip over, and there was no television on the CSU. These are the same sets of data as those in Tab C; refer to that memorandum for a detailed explanation of how the data were selected. As in the NPR briefing package, this analysis does not include NEISS incidents because NEISS reports do not contain specific information about the products.[5]

Compliance of Units in Fatal Incidents Involving Children and CSUs Without Televisions

Data Added Since the NPR

Of the six fatal CPSRMS tip-over incidents involving children and CSUs without televisions received after the timeframes searched for the NPR, CPSC staff determined that one CSU clearly meets the ASTM F2057 – 19 stability requirements.

The CSU that clearly meets the ASTM F2057 – 19 stability requirements was reportedly manufactured in September 2020. LSM staff tested an exemplar sample and determined that it met the stability requirements in ASTM F2057 – 19, and that it tipped with 85 pounds on a single open drawer when tested to failure using that test method.[6] Staff performed separate testing and determined that the unit did not meet the stability requirements in the NPR.

[5] As discussed in Tab C, there were 11 NEISS incidents involving children and CSUs without televisions in the post-NPR data set with a completed follow-up investigation. Data on compliance of the units for these incidents are included in the analysis of nonfatal incidents.

[6] Staff's method for testing to failure per ASTM F2057 – 19 is described in Tab N of the NPR briefing package: Sanborn, M. (2021.) Tab N: FY 2018 Midyear Clothing Storage Unit Testing Program Summary. Staff Briefing Package: Draft Notice of Proposed Rulemaking for Clothing Storage Units. U.S. Consumer Product Safety Commission, Bethesda, MD. Available at: https://cpsc.gov/s3fs-public/Proposed%20Rule-%20Safety%20Standard%20for%20Clothing%20Storage%20Units.pdf.

For the remaining five incidents, staff was unable to determine if the CSUs meet the ASTM F2057 – 19 stability requirements because the products were not identified, and CPSC staff did not have access to the incident samples.

Data Summary

In Table 2, staff summarizes the compliance with ASTM F2057 – 19 stability requirements for fatal CPSRMS tip-over incidents involving children and CSUs without televisions for the incidents received after the timeframes searched for the NPR and those reported in the NPR briefing package.[7]

Table 2. Summary of Compliance with ASTM F2057 – 19 Stability Requirements for Units in Fatal CPSRMS Tip-over Incidents Involving Children and CSUs without Televisions

	Compliance with ASTM F2057 – 19 Stability Requirements				
Data Set	Meet	Meet in some conditions	Do Not Meet	Undetermined	Total
NPR	1	1	11	76	89
New incidents	1	0	0	5	6
Total	2	1	11	81	95

Compliance of Units in Nonfatal Incidents Involving Children and CSUs without Televisions

Data Added or Changed Since the NPR

Of the 97 nonfatal CPSRMS tip-over incidents involving children and CSUs without televisions received after the timeframes searched for the NPR, CPSC staff determined that 28 of the CSUs meet the ASTM F2057 – 19 stability requirements, and 11 do not meet the ASTM F2057 – 19 stability requirements. Two units were found to be out-of-scope of ASTM F2057 – 19. For the remaining 56 CSUs, staff was unable to determine whether the units meet the ASTM F2057 – 19 stability requirements. In addition, staff added seven incidents from the NPR timeframe, removed one incident, and re-coded three incidents. The resulting changes to the NPR data are: two additional units that meet the ASTM F2057 – 19 stability requirements, one additional unit for which staff was unable to determine whether they meet the ASTM F2057 – 19 stability requirements, and three units that are out-of-scope of ASTM F2057 – 19.

[7] See Tab F of the NPR briefing package.

For the 28 new nonfatal incidents involving a CSU that staff determined meet the ASTM F2057 – 19 stability requirements:

- Sixteen involved the 8-drawer Model E CSU analyzed by ESMC staff in Tab M of the NPR briefing package,[8] and reported in Tab F of the NPR briefing package. Staff verified that the unit met the stability requirements by testing incident samples and exemplars.
- One involved a post-recall model of a 6-drawer CSU. This is the same model as reported in Tab F of the NPR briefing package.
- One involved a post-recall model of a 3-drawer CSU. This is the same model as reported in Tab F of the NPR briefing package.
- One involved a 7-drawer CSU. CPSC staff tested an exemplar sample of the unit and determined that it met the stability requirements in ASTM F2057 – 19.
- Two involved a 5-drawer CSU. CPSC staff tested an exemplar sample of the unit and determined that it met the stability requirements in ASTM F2057 – 19. One unit was purchased in December 2019, the other was purchased around August 2020. Staff did not have access to the incident samples.
- One involved a post-recall model of a 6-drawer CSU, but staff could not determine the exact model.[9]
- Three involved a post-recall model of a 6-drawer CSU.
- One involved a post-recall model of a 4-drawer CSU.
- One involved a non-recalled model of a 6-drawer CSU.[10]
- One involved a different non-recalled 6-drawer CSU.

For the 11 new nonfatal incidents involving CSUs that staff determined do not meet the ASTM F2057 – 19 stability requirements:

- One involved a 3-drawer CSU that was recalled in 2017. This is the same model as one in Tab F of the NPR briefing package.

[8] Mella, L., Newens, A., Taxier, D. (2021.) Tab M: Mechanical Evaluation and Analytical Modeling of Incident-Involved Clothing Storage Units. Staff Briefing Package: Draft Notice of Proposed Rulemaking for Clothing Storage Units. U.S. Consumer Product Safety Commission, Bethesda, MD. Available at: https://cpsc.gov/s3fs-public/Proposed%20Rule-%20Safety%20Standard%20for%20Clothing%20Storage%20Units.pdf.
[9] Products manufactured after the recall must meet the stability requirements of the voluntary standard.
[10] Units that were not included in the recall are assumed to meet the stability requirements of the voluntary standard.

- Two involved a 4-drawer CSU that was recalled in 2017. This is the same model as one in Tab F of the NPR briefing package.
- One involved a different 4-drawer CSU that was recalled in 2017. This is the same model as one in Tab F of the NPR briefing package.
- One involved a 5-drawer CSU that was recalled in 2017. This is the same model as one in Tab F of the NPR briefing package.
- Three involved a 6-drawer CSU that was recalled in 2017. This is the same model as one in Tab F of the NPR briefing package.
- One involved a CSU recalled in 2017; staff could not determine the exact model, but was able to confirm it was within the scope of the recall.
- One involved a 4-drawer CSU that was recalled in 2021.
- One involved a 9-drawer CSU that was recalled in 2022.

For the two new nonfatal incidents involving CSUs that staff determined were out-of-scope of ASTM F2057 – 19:

- One involved a 2-drawer unit that is 22 inches tall.
- One involved a 3-drawer unit that is 26.75 inches tall.

These CSUs are out of scope of ASTM F2057 – 19 because the standard only applies to CSUs that are 27 inches or taller in height.

For the remaining 56 new nonfatal incidents involving CSUs for which staff was unable to determine if the CSU meets the ASTM F2057 – 19 stability requirements:

- Twenty-two lacked information on manufacturer/retailer or model.
- Three had information on manufacturer/retailer, but not model.
- Four had information on manufacturer/retailer and model, but staff did not have test reports or a sample.
- Two involved a potentially recalled model, but staff could not determine if the incident unit was within the recall's scope.
- Twenty involved a potentially recalled model, but staff could not determine if the incident unit was a pre-recall or post-recall model.
- One was described as handmade, and staff did not have the incident sample.
- Three had information on manufacturer/retailer, but staff did not have enough information to determine whether the unit was a recalled model.

- One involved a 7-drawer CSU that the manufacturer claims is "[t]ested for lead and other toxic elements to meet or exceed government and ASTM safety standards." It is unclear if this statement applies to the stability requirements in ASTM F2057. The incident unit was manufactured in 2017. Staff did not have test reports or a sample.

For the seven added incidents from the NPR timeframe:

- One unit meets the ASTM F2057 – 19 stability requirements and is the 8-drawer Model E CSU analyzed by ESMC staff in Tab M of the NPR briefing package, and reported in Tab F of the NPR briefing package.[11] Staff verified that the unit met the stability requirements by testing incident samples and exemplars.
- One unit does not meet the ASTM F2057 – 19 stability requirements and is a 5-drawer CSU that was recalled in 2017.
- One unit is out-of-scope of ASTM F2057 – 19 and is a 2-drawer unit that is 22 inches tall. This is the same model as the one referenced in the list of new nonfatal incidents involving CSUs that staff determined do not meet the ASTM F2057 – 19 stability requirements above.
- Four were units for which staff was unable to determine if the CSU meets the ASTM F2057 – 19 stability requirements:
    - One is a 5-drawer CSU. Staff tested an exemplar sample of the same model and determined that it met the stability requirements of ASTM F2057 – 19. However, due to design changes by the manufacturer of the incident unit and the exemplar, staff could not determine if the exemplar sample was representative of the incident unit. This is the same model that is in Tab F of the NPR briefing package.
    - Three are units that had information on manufacturer/retailer and model, but staff did not have test reports or a sample.

For the incident that was removed because it took place in a foreign country, the unit was a potentially recalled model in the United States, but staff could not determine if the incident unit was a pre-recall or post-recall model.

For the three incidents where staff revised the product data: one unit was recategorized from a "6-drawer CSU that was recalled in 2017 and does not meet the ASTM F2057 – 19 stability requirements" to "the 8-drawer Model E CSU analyzed by ESMC staff in Tab M of the NPR briefing package that does meet the ASTM F2057 – 19 stability requirements."[12] The other two

[11] See Tab M of the Staff's NPR briefing package.
[12] This incident report discussed tip overs of two different CSUs. Staff revised the product coding to match the tip over that was analyzed in Tab C of the NPR briefing package.

were recategorized from unknown (had information on manufacturer/retailer and model, but staff did not have test reports or a sample) to out-of-scope based on their 26-inch height.

Data Summary

In Table 3, staff summarizes the compliance with ASTM F2057 – 19 stability requirements for fatal CPSRMS tip-over incidents involving children and CSUs without televisions for the incidents received after the timeframes searched for the NPR and those reported in the NPR briefing package.[13]

Table 3. Summary of Compliance with ASTM F2057 – 19 Stability Requirements for Units in Nonfatal CPSRMS Tip-over Incidents Involving Children and CSUs without Televisions

	Compliance with ASTM F2057 – 19 Stability Requirements				
Data Set	Meet	Do Not Meet	Undetermined	Out-of-scope	Total
NPR*	22	95	149	3	269
New incidents	28	11	56	2	97
Total	50	106	205	5	366

*Includes changes to NPR data set resulting from seven added incidents, one removed incident, and three re-coded incidents.

Discussion

Staff has seen a rise in incidents with identified units that meet the ASTM F2057 – 19 stability requirements from those reported in the NPR. This may be due to more ASTM F2057 – 19-compliant units entering the market. Many tip-over incidents involve CSUs that have been in the home for some time, possibly years, before the incident occurs. The original NPR data set spanned 20 years for the fatal CPSRMS incidents, and 15 years for the nonfatal CPSRMS incidents. The current stability requirements were introduced in ASTM F2057 – 14, so less than six years of the NPR timeframe included potential production of units that may comply with the stability requirements in the ASTM standard.

The timeframe for the data set in this briefing package includes an additional year and 4 months of potential production of units that may conform to the ASTM stability requirements. For the new data, the number of identified units that met the ASTM F2057 – 19 stability requirements was almost three times the number that did not meet the requirements. Based on these data, staff predict that the number of incidents with CSUs that meet the ASTM F2057 – 19 stability requirements may continue to rise as consumers replace older CSUs (that predate the current stability requirements) with new CSUs. The assessment of these additional incident-involved

[13] See Tab F of the NPR briefing package.

CSUs, from after the NPR briefing package, further contribute to staff's assessment that ASTM F2057 – 19 is inadequate to address the hazard.

IV. Conclusion

As detailed in the NPR briefing package, LSM staff concludes that ASTM F2057 – 19, as well as the other standards, AS/NZA 4935:2009, ISO 7171:2019, and EN14749:2016, are all inadequate to protect children against the tip-over hazards posed by CSUs. ANSI/BIFMA X6.5-2022 does not address CSU stability. As detailed in the NPR analysis, none of these standards account for the hazard patterns, such as:

- Child Interaction (ascent/climb) – climbing is frequently reported in the incident data.
- Multiple open drawers – opening multiple drawers significantly impacts CSU stability. Incidents indicate that children opened one or more drawers.
- Filled drawers – consumers are likely to fill drawers with clothing because that is the purpose of these consumer products. A CSU with filled drawers is likely to be less stable than an empty unit when more than half the drawers are open.
- Flooring Surfaces – incident data indicate that many reported tip-over incidents, when flooring type is known, occur on carpeting. When CSUs are placed on a carpeted surface, they become less stable.

While some standards at least somewhat address individual hazard patterns, they do not adequately address each of the issues highlighted by incident data and testing identified in this briefing package. CPSC staff concludes that the international and voluntary standards that address CSU stability are not adequate to effectively reduce the CSU tip-over hazard.

In this memorandum, LSM staff presented additional data on CSUs involved in incidents that met the ASTM F2057 – 19 stability requirements. Staff identified one additional unit involved in a fatal incident, and 30 additional units involved in nonfatal incidents that met the stability requirements. The number of identified units that met the stability requirements was almost three times the number that did not meet the requirements. Based on these data, staff predict that the number of incidents with CSUs that meet the ASTM F2057 – 19 stability requirements will continue to rise as consumers replace older CSUs, which are less likely to be complaint, with new CSUs. The high number of incidents involving units that meet the ASTM F2057 – 19 requirements reinforces staff's conclusion that the standard is inadequate to address the tip-over hazard.

This page intentionally left blank.

Appendix F1: Summary of ASTM CSU-Related Ballot Items

Table F1-1. Summary of ASTM CSU-Related Ballot Items

Ballot	Item	Content	Staff vote
F15 (22-06) *Issued:* May 4, 2022 *Closed:* June 3, 2022	1	Changes to warning label content, including: • Modification to existing interlock warning to add that it is "an important stability and safety system" • Added warning for units with interlocks to not "remove the interlock system except for maintenance as shown" • Allowance for customization of warning language to be specific to the unit • Allowance to address to television use in a separate label	Negative
	2	Changes to warning label location, including: • Added specification to determine whether warnings are "conspicuous when in use," • Allowance for warnings in consumer-assembled furniture to be acceptable if it meets requirement in any possible location • Added Appendix X3, which contains non-mandatory best practices for warning location	Negative
	3	New definitions and test methods for units with levelers and height adjusters, including: • Added definitions for "Height Adjuster" and "Leveler" • Added instructions for measuring height	Abstain
	4	Changes to scope, including: • Added exclusion for units weighing less than 30 pounds (empty weight) • Added exclusion for units below 3.2 cubic feet of enclosed storage volume • Removed "nightstand exemption" Other scope-related changes, including: • Added of specific instructions for measuring extendable and non-extendable elements • Added specific volume calculation, including exclusions for volumes with height of less than 3 inches and less than 0.06 cubic feet	Negative
	5	New interlock definitions, requirements, and test including: • Added definitions for extendable element and interlock • Added interlock requirements, including allowance for consumer disengagement and consumer assembly of interlocks on Ready-to-Assemble (RTA) units • Added interlock test with 30-pound pull force	Negative

	6	Changes to test weight specifications and figures, including: • Specifications for a test weight with two 30-pound weights connected with a strap • Replaced figure showing 50-pound test weight with one showing 60-pound test weight	Negative
	7	Added specifications for a new alternative two-part 60-pound test apparatus	Negative

	8	Changes to stability tests, including new stability test
		• "Simulate Clothing Load in a Clothing Storage Unit" (revision of previous stability test in Section 7.1)
		  • CSU on a flat level surface
		  • All extendable elements and doors open*
		  • Extendable elements loaded with 8.5 pounds per cubic foot of their volume (fill weight),** space behind doors loaded with 8.5 pounds per cubic foot of half of their volume
		  • No additional force
		• "Simulate a Reaction on Carpet with a Child Weight" (revision of previous stability test in Section 7.2)
		  • Back feet of CSU on 0.43-inch block
		  • All extendable elements and doors open*
		  • No fill weight in extendable elements
		  • 60-pound weight applied to face of open extendable element
		• "Simulate Horizontal Dynamic Force on a Clothing Storage Unit" (new test)
		  • CSU on a flat level surface
		  • All extendable elements and doors open*
		  • No fill weight in extendable elements
		  • 10-pound outward horizontal force applied to highest reach point 56 inches or below
		
		*Except those that are interlocked with an interlock that meets specified requirements, including a 30-pound pull test.
		** Interlocked extendable elements are only loaded with a fill weight if 50% more, by volume, are open.
			Negative

F15 (22-07) *Issued:* May 20, 2022 *Closed:* June 20, 2022	1	Changes to stability tests to add reference to adjustment of units with levelers to the "Simulate a Reaction on Carpet with a Child Weight" and "Simulate Horizontal Dynamic Force on a Clothing Storage Unit" stability tests (was previously only referenced in the "Simulate Clothing Load in a Clothing Storage Unit" test)	Abstain
F15 (22-11) *Issued:*	1	Changes to language and figures describing test block placement for units with rear floor supports less than 1 inch deep	Negative

July 18, 2022 *Closed:* August 18, 2022	2	Changes to language for placement of CSU on test surface, and addition of a test surface figure	Negative
	3	Changes to interlock test to add reference to test surface	Negative
	4	Changes to language in “Simulate a Reaction on Carpet with a Child Weight” stability test to clarify that 60-pound test weight is applied to only one door at a time	Negative
	5	Changes to figures showing application of 60-pound test weight	Negative
	6	Changes to “Simulate Horizontal Dynamic Force on a Clothing Storage Unit” test: clarification to use the highest handhold under 56 inches, and that the force can be applied as a pull or a push on the back of the drawer front	Negative
	7	Changes to warning label figures to include a previously-balloted change to a warning statement	Negative
	8	Changes to definition of “extendable element” to specify that “extendable element” does not include bins	Negative

This page intentionally left blank.

Appendix F2: CPSC Staff's Statements for Negative Ballot Votes

United States
Consumer Product Safety Commission
cpsc.gov | info@cpsc.gov | 800.638.2772

June 3, 2022

TRANSMITTED VIA EMAIL
Richard Rosati
Chair, ASTM F15.42 Furniture Safety Subcommittee
ASTM International
100 Barr Harbor Dr.
West Conshohocken, PA 19428-2959

Re: Negative Vote for ASTM Ballot F15 (22-06), Item 1

Dear Mr. Rosati:

U.S. Consumer Product Safety Commission (CPSC) staff[1] is casting a negative vote on the ballot on changes related to the warning label content for the ASTM F2057 Clothing Storage Unit (CSU) voluntary standard (F1500000622001).

The CPSC notice of proposed rulemaking (NPR), Safety Standard for Clothing Storage Units (CSUs)[2] and associated staff briefing package, Draft Notice of Proposed Rulemaking for Clothing Storage Units,[3] include detailed discussions of the justifications for including certain warning label requirements in the standard.[4] Staff is concerned that the ASTM-balloted changes (*e.g.,* label changes related to consumers removing the interlock system), and other misalignments with the NPR warning label requirements do not provide sufficiently effective warnings.

CPSC staff asserts that the requirements in the NPR are necessary to address the hazard of CSU tip over and urges ASTM to adopt the NPR requirements in the F2057 voluntary standard.

[1] The views or opinions expressed in this letter are solely those of the staff, and these views and opinions do not necessarily represent those of the Commission.
[2] Consumer Product Safety Commission (2022). Safety Standard for Clothing Storage Units: Notice of proposed rulemaking. 87 Fed. Reg. 6246 (February 3, 2022). Docket No. CPSC-2017-0044. Available: https://www.federalregister.gov/documents/2022/02/03/2022-01689/safety-standard-for-clothing-storage-units
[3] CPSC Staff (2021). Staff Briefing Package: Draft Notice of Proposed Rulemaking for Clothing Storage Units. July 2021. Available: https://cpsc.gov/s3fs-public/Proposed%20Rule-%20Safety%20Standard%20for%20Clothing%20Storage%20Units.pdf?OcybMVfa9ANi6sqiog7qkeNP48c_uz0T.
[4] CPSC staff are currently reviewing public comments to the NPR. Draft final rule and final rule language may be different than that in the NPR.

U.S. Consumer Product Safety Commission
4330 East-West Highway
Bethesda, MD 20814

National Product Testing & Evaluation Center
5 Research Place
Rockville, MD 20850

Sincerely,

KRISTEN TALCOTT

Digitally signed by KRISTEN TALCOTT
Date: 2022.06.03 12:08:19 -04'00'

Kristen Talcott
Project Manager, Clothing Storage Units

cc: Molly Lynyak, Manager, Technical Committee Operations
Jacqueline Campbell, CPSC Voluntary Standards Coordinator

United States
Consumer Product Safety Commission
cpsc.gov | info@cpsc.gov | 800.638.2772

June 3, 2022

TRANSMITTED VIA EMAIL
Richard Rosati
Chair, ASTM F15.42 Furniture Safety Subcommittee
ASTM International
100 Barr Harbor Dr.
West Conshohocken, PA 19428-2959

Re: Negative Vote for ASTM Ballot F15 (22-06), Item 2

Dear Mr. Rosati:

U.S. Consumer Product Safety Commission (CPSC) staff[1] is casting a negative vote on the ballot on changes related to the warning label placement for the ASTM F2057 Clothing Storage Unit (CSU) voluntary standard (F1500000622002).

The CPSC notice of proposed rulemaking (NPR), Safety Standard for Clothing Storage Units (CSUs)[2] and associated staff briefing package, *Draft Notice of Proposed Rulemaking for Clothing Storage Units*,[3] have detailed discussions of the justifications for including certain warning label requirements in the standard.[4]

Staff is concerned that the ASTM-balloted changes (*e.g.,* making warning label placement height non-mandatory; the allowance for warning labels on consumer-assembled units to be placed in non-conspicuous locations, depending on how the consumer assembles the parts; and the option for a shortened warning on the drawer side, with a full warning placed in the bottom of the drawer) do not ensure warning label conspicuity.

[1] The views or opinions expressed in this letter are solely those of the staff, and these views and opinions do not necessarily represent those of the Commission.
[2] Consumer Product Safety Commission (2022). Safety Standard for Clothing Storage Units: Notice of proposed rulemaking. 87 Fed. Reg. 6246 (February 3, 2022). Docket No. CPSC-2017-0044. Available: https://www.federalregister.gov/documents/2022/02/03/2022-01689/safety-standard-for-clothing-storage-units
[3] CPSC Staff (2021). Staff Briefing Package: Draft Notice of Proposed Rulemaking for Clothing Storage Units. July 2021. Available: https://cpsc.gov/s3fs-public/Proposed%20Rule-%20Safety%20Standard%20for%20Clothing%20Storage%20Units.pdf?OcybMVfa9ANi6sqiog7qkeNP48c_uz0T.
[4] CPSC staff are currently reviewing public comments to the NPR. Draft final rule and final rule language may be different than that in the NPR.

U.S. Consumer Product Safety Commission
4330 East-West Highway
Bethesda, MD 20814

National Product Testing & Evaluation Center
5 Research Place
Rockville, MD 20850

CPSC staff asserts that the requirements in the NPR are necessary to address the hazard of CSU tip over and urges ASTM to adopt the NPR requirements in the F2057 voluntary standard.

Sincerely,

KRISTEN TALCOTT Digitally signed by KRISTEN TALCOTT
Date: 2022.06.03 12:09:22 -04'00'

Kristen Talcott
Project Manager, Clothing Storage Units

cc: Molly Lynyak, Manager, Technical Committee Operations
Jacqueline Campbell, CPSC Voluntary Standards Coordinator

United States
Consumer Product Safety Commission
cpsc.gov | info@cpsc.gov | 800.638.2772

June 3, 2022

TRANSMITTED VIA EMAIL
Richard Rosati
Chair, ASTM F15.42 Furniture Safety Subcommittee
ASTM International
100 Barr Harbor Dr.
West Conshohocken, PA 19428-2959

Re: Negative Vote for ASTM Ballot F15 (22-06), Item 4

Dear Mr. Rosati:

U.S. Consumer Product Safety Commission (CPSC) staff[1] is casting a negative vote on the ballot on changes related to the warning label placement for the ASTM F2057 Clothing Storage Unit (CSU) voluntary standard (F1500000622004).

The CPSC notice of proposed rulemaking (NPR), Safety Standard for Clothing Storage Units (CSUs)[2] and associated staff briefing package, *Draft Notice of Proposed Rulemaking for Clothing Storage Units*,[3] have detailed discussions of the justifications for elements in the CSU definition and scope.[4] Staff is concerned that the ASTM balloted changes do not align with several of those elements (*e.g.*, weight and volume limits, calculation of enclosed storage volume), and, therefore, do not address the full range of products that pose a tip-over hazard.

CPSC staff asserts that the requirements in the NPR are necessary to address the hazard of CSU tip over and urges ASTM to adopt the NPR requirements in the F2057 voluntary standard.

[1] The views or opinions expressed in this letter are solely those of the staff, and these views and opinions do not necessarily represent those of the Commission.
[2] Consumer Product Safety Commission (2022). Safety Standard for Clothing Storage Units: Notice of proposed rulemaking. 87 Fed. Reg. 6246 (February 3, 2022). Docket No. CPSC-2017-0044. Available: https://www.federalregister.gov/documents/2022/02/03/2022-01689/safety-standard-for-clothing-storage-units
[3] CPSC Staff (2021). Staff Briefing Package: Draft Notice of Proposed Rulemaking for Clothing Storage Units. July 2021. Available: https://cpsc.gov/s3fs-public/Proposed%20Rule-%20Safety%20Standard%20for%20Clothing%20Storage%20Units.pdf?OcybMVfa9ANi6sqiog7qkeNP48c_uz0T.
[4] CPSC staff are currently reviewing public comments to the NPR. Draft final rule and final rule language may be different than that in the NPR.

U.S. Consumer Product Safety Commission
4330 East-West Highway
Bethesda, MD 20814

National Product Testing & Evaluation Center
5 Research Place
Rockville, MD 20850

Sincerely,

KRISTEN TALCOTT Digitally signed by KRISTEN TALCOTT Date: 2022.06.03 12:10:06 -04'00'

Kristen Talcott
Project Manager, Clothing Storage Units

cc: Molly Lynyak, Manager, Technical Committee Operations
Jacqueline Campbell, CPSC Voluntary Standards Coordinator

United States
Consumer Product Safety Commission
cpsc.gov | info@cpsc.gov | 800.638.2772

June 3, 2022

TRANSMITTED VIA EMAIL
Richard Rosati
Chair, ASTM F15.42 Furniture Safety Subcommittee
ASTM International
100 Barr Harbor Dr.
West Conshohocken, PA 19428-2959

Re: Negative Vote for ASTM Ballot F15 (22-06), Item 5

Dear Mr. Rosati:

U.S. Consumer Product Safety Commission (CPSC) staff[1] is casting a negative vote on the ballot on changes related to requirements for interlocking elements in the ASTM F2057 Clothing Storage Unit (CSU) voluntary standard (F1500000622005).

The CPSC notice of proposed rulemaking (NPR), Safety Standard for Clothing Storage Units (CSUs)[2] and associated staff briefing package, Draft Notice of Proposed Rulemaking for Clothing Storage Units,[3] include discussion and requirements for interlocked components.[4] These requirements include that interlocks be pre-installed and automatically engage when drawers are installed, which limits the potential for consumer misassembly and increases the likelihood that these critical safety components are functional when consumers are using the product. Staff is concerned that interlock requirements in the ASTM-balloted language (*e.g.,* allowance for features that enable consumers to use the CSU with the interlock system disabled, and consumer assembly of interlock components for units shipped/sold unassembled) allow consumers to use CSUs in untested, less stable configurations that pose a greater risk of tip over.

[1] The views or opinions expressed in this letter are solely those of the staff, and these views and opinions do not necessarily represent those of the Commission.
[2] Consumer Product Safety Commission (2022). Safety Standard for Clothing Storage Units: Notice of proposed rulemaking. 87 Fed. Reg. 6246 (February 3, 2022). Docket No. CPSC-2017-0044. Available: https://www.federalregister.gov/documents/2022/02/03/2022-01689/safety-standard-for-clothing-storage-units
[3] CPSC Staff (2021). Staff Briefing Package: Draft Notice of Proposed Rulemaking for Clothing Storage Units. July 2021. Available: https://cpsc.gov/s3fs-public/Proposed%20Rule-%20Safety%20Standard%20for%20Clothing%20Storage%20Units.pdf?OcybMVfa9ANi6sqiog7qkeNP48c_uz0T.
[4] CPSC staff are currently reviewing public comments to the NPR. Draft final rule and final rule language may be different than that in the NPR.

U.S. Consumer Product Safety Commission
4330 East-West Highway
Bethesda, MD 20814

National Product Testing & Evaluation Center
5 Research Place
Rockville, MD 20850

CPSC staff asserts that the requirements in the NPR are necessary to address the hazard of CSU tip over and urges ASTM to adopt the NPR requirements in the F2057 voluntary standard.

Sincerely,

KRISTEN TALCOTT Digitally signed by KRISTEN TALCOTT Date: 2022.06.03 12:11:27 -04'00'

Kristen Talcott
Project Manager, Clothing Storage Units

cc: Molly Lynyak, Manager, Technical Committee Operations
Jacqueline Campbell, CPSC Voluntary Standards Coordinator

United States
Consumer Product Safety Commission
cpsc.gov | info@cpsc.gov | 800.638.2772

June 3, 2022

TRANSMITTED VIA EMAIL
Richard Rosati
Chair, ASTM F15.42 Furniture Safety Subcommittee
ASTM International
100 Barr Harbor Dr.
West Conshohocken, PA 19428-2959

Re: Negative Vote for ASTM Ballot F15 (22-06), Item 6

Dear Mr. Rosati:

U.S. Consumer Product Safety Commission (CPSC) staff[1] is casting a negative vote on the ballot on changes related to requirements for the test weight in the ASTM F2057 Clothing Storage Unit (CSU) voluntary standard (F1500000622006).

The CPSC notice of proposed rulemaking (NPR), Safety Standard for Clothing Storage Units (CSUs)[2] and associated staff briefing package, *Draft Notice of Proposed Rulemaking for Clothing Storage Units*,[3] have detailed discussions of the justifications for CSU stability requirements and test elements.[4] The ASTM-balloted 60-pound test weight and associated stability test do not account for or simulate the forces from a dynamic child climbing interaction, which is a critical component of adequately addressing the tip-over hazard.

CPSC staff asserts that the requirements in the NPR are necessary to address the hazard of CSU tip over and urges ASTM to adopt the NPR requirements in the F2057 voluntary standard.

[1] The views or opinions expressed in this letter are solely those of the staff, and these views and opinions do not necessarily represent those of the Commission.
[2] Consumer Product Safety Commission (2022). Safety Standard for Clothing Storage Units: Notice of proposed rulemaking. 87 Fed. Reg. 6246 (February 3, 2022). Docket No. CPSC-2017-0044. Available: https://www.federalregister.gov/documents/2022/02/03/2022-01689/safety-standard-for-clothing-storage-units
[3] CPSC Staff (2021). Staff Briefing Package: Draft Notice of Proposed Rulemaking for Clothing Storage Units. July 2021. Available: https://cpsc.gov/s3fs-public/Proposed%20Rule-%20Safety%20Standard%20for%20Clothing%20Storage%20Units.pdf?OcybMVfa9ANi6sqiog7qkeNP48c_uz0T.
[4] CPSC staff are currently reviewing public comments to the NPR. Draft final rule and final rule language may be different than that in the NPR.

U.S. Consumer Product Safety Commission
4330 East-West Highway
Bethesda, MD 20814

National Product Testing & Evaluation Center
5 Research Place
Rockville, MD 20850

Sincerely,

KRISTEN TALCOTT Digitally signed by KRISTEN TALCOTT
Date: 2022.06.03 12:12:17 -04'00'

Kristen Talcott
Project Manager, Clothing Storage Units

cc: Molly Lynyak, Manager, Technical Committee Operations
Jacqueline Campbell, CPSC Voluntary Standards Coordinator

United States
Consumer Product Safety Commission
cpsc.gov | info@cpsc.gov | 800.638.2772

June 3, 2022

TRANSMITTED VIA EMAIL
Richard Rosati
Chair, ASTM F15.42 Furniture Safety Subcommittee
ASTM International
100 Barr Harbor Dr.
West Conshohocken, PA 19428-2959

Re: Negative Vote for ASTM Ballot F15 (22-06), Item 7

Dear Mr. Rosati:

U.S. Consumer Product Safety Commission (CPSC) staff[1] is casting a negative vote on the ballot on changes related to requirements for the test weight in the ASTM F2057 Clothing Storage Unit (CSU) voluntary standard (F1500000622007).

The CPSC notice of proposed rulemaking (NPR), Safety Standard for Clothing Storage Units (CSUs)[2] and associated staff briefing package, *Draft Notice of Proposed Rulemaking for Clothing Storage Units*,[3] have detailed discussions of the justifications for CSU stability requirements and test elements.[4] The ASTM-balloted 60-pound test weight and associated stability test do not account for or simulate the forces from a dynamic child climbing interaction, which is a critical component of adequately addressing the tip-over hazard.

CPSC staff asserts that the requirements in the NPR are necessary to address the hazard of CSU tip over and urges ASTM to adopt the NPR requirements in the F2057 voluntary standard.

[1] The views or opinions expressed in this letter are solely those of the staff, and these views and opinions do not necessarily represent those of the Commission.
[2] Consumer Product Safety Commission (2022). Safety Standard for Clothing Storage Units: Notice of proposed rulemaking. 87 Fed. Reg. 6246 (February 3, 2022). Docket No. CPSC-2017-0044. Available: https://www.federalregister.gov/documents/2022/02/03/2022-01689/safety-standard-for-clothing-storage-units
[3] CPSC Staff (2021). Staff Briefing Package: Draft Notice of Proposed Rulemaking for Clothing Storage Units. July 2021. Available: https://cpsc.gov/s3fs-public/Proposed%20Rule-%20Safety%20Standard%20for%20Clothing%20Storage%20Units.pdf?OcybMVfa9ANi6sqiog7qkeNP48c_uz0T.
[4] CPSC staff are currently reviewing public comments to the NPR. Draft final rule and final rule language may be different than that in the NPR.

U.S. Consumer Product Safety Commission
4330 East-West Highway
Bethesda, MD 20814

National Product Testing & Evaluation Center
5 Research Place
Rockville, MD 20850

Sincerely,

KRISTEN TALCOTT

Digitally signed by KRISTEN TALCOTT
Date: 2022.06.03 12:13:06 -04'00'

Kristen Talcott
Project Manager, Clothing Storage Units

cc: Molly Lynyak, Manager, Technical Committee Operations
Jacqueline Campbell, CPSC Voluntary Standards Coordinator

United States
Consumer Product Safety Commission
cpsc.gov | info@cpsc.gov | 800.638.2772

June 3, 2022

TRANSMITTED VIA EMAIL
Richard Rosati
Chair, ASTM F15.42 Furniture Safety Subcommittee
ASTM International
100 Barr Harbor Dr.
West Conshohocken, PA 19428-2959

Re: Negative Vote for ASTM Ballot F15 (22-06), Item 8

Dear Mr. Rosati:

U.S. Consumer Product Safety Commission (CPSC) staff[1] is casting a negative vote on the ballot on changes related to the testing requirements for the ASTM F2057 Clothing Storage Unit (CSU) voluntary standard (F1500000622008).

The CPSC notice of proposed rulemaking (NPR), Safety Standard for Clothing Storage Units (CSUs)[2] and associated staff briefing package, *Draft Notice of Proposed Rulemaking for Clothing Storage Units*,[3] have detailed discussions of the justifications for elements in the CSU definition and scope.[4] Staff has several concerns with the ASTM-balloted tests, including:

1. Tests do not simulate multiple simultaneous factors that are demonstrated to decrease stability and to simultaneously exist during known incidents—*i.e.*, multiple open/filled drawers, carpet, and forces from children's dynamic interactions.

2. The test in Section 9.2.3, *Simulating a Reaction on Carpet with Child Weight*, uses a 60-pound test weight placed on the edge of an open drawer. The balloted language implies that the 60-pound test

[1] The views or opinions expressed in this letter are solely those of the staff, and these views and opinions do not necessarily represent those of the Commission.
[2] Consumer Product Safety Commission (2022). Safety Standard for Clothing Storage Units: Notice of proposed rulemaking. 87 Fed. Reg. 6246 (February 3, 2022). Docket No. CPSC-2017-0044. Available: https://www.federalregister.gov/documents/2022/02/03/2022-01689/safety-standard-for-clothing-storage-units
[3] CPSC Staff (2021). Staff Briefing Package: Draft Notice of Proposed Rulemaking for Clothing Storage Units. July 2021. Available: https://cpsc.gov/s3fs-public/Proposed%20Rule-%20Safety%20Standard%20for%20Clothing%20Storage%20Units.pdf?OcybMVfa9ANi6sqiog7qkeNP48c_uz0T.
[4] CPSC staff are currently reviewing public comments to the NPR. Draft final rule and final rule language may be different than that in the NPR.

U.S. Consumer Product Safety Commission
4330 East-West Highway
Bethesda, MD 20814

National Product Testing & Evaluation Center
5 Research Place
Rockville, MD 20850

weight represents the body weight of a child, and that the test simulates a child's interaction force. However, the Child Climbing Study (Tab R) and analysis in the CPSC staff briefing package demonstrates that the Center of Mass of a child climbing would be outboard of the drawers. Static body weight in line with the edge of the drawer (as proposed Section 9.2.3) substantially underestimates the forces generated during child climbing interactions. Incident data shows climbing interactions to be among the most common interactions during incidents.

3. The pull force in the test in Section 9.2.2 is lower than demonstrated child strength, and does not appear to be a simulated dynamic force, as claimed.

CPSC staff asserts that the requirements in the NPR are necessary to address the hazard of CSU tip over and urges ASTM to adopt the NPR requirements in the F2057 voluntary standard.

Sincerely,

KRISTEN TALCOTT Digitally signed by KRISTEN TALCOTT Date: 2022.06.03 12:13:49 -04'00'

Kristen Talcott
Project Manager, Clothing Storage Units

cc: Molly Lynyak, Manager, Technical Committee Operations
Jacqueline Campbell, CPSC Voluntary Standards Coordinator

United States
Consumer Product Safety Commission

August 16, 2022

TRANSMITTED VIA EMAIL

Mr. Richard Rosati
Chair, ASTM F15.42 Furniture Safety Subcommittee
ASTM International
100 Barr Harbor Dr.
West Conshohocken, PA 19428-2959

Re: Negative Vote for ASTM Ballot F15 (22-11), Items 1-8

Dear Mr. Rosati:

U.S. Consumer Product Safety Commission (CPSC) staff[1] is casting a negative vote on the ballots for revisions to the ASTM F2057 Clothing Storage Unit (CSU) voluntary standard (F1500001122001, F1500001122002, F1500001122003, F1500001122004, F1500001122005, F1500001122006, F1500001122007, F1500001122008).

CPSC staff continues to be concerned that the ASTM F2057 voluntary standard, including the recent revisions that have passed and the revisions currently being balloted, still do not account for real-world tip over scenarios, such as a child climbing or pulling on a CSU with all the drawers filled and open.

The CPSC's notice of proposed rulemaking (NPR), Safety Standard for Clothing Storage Units (CSUs),[2] and the associated staff briefing package, Draft Notice of Proposed Rulemaking for Clothing Storage Units,[3] have detailed discussions of the justifications for CSU requirements and test elements. Staff has previously described specific concerns about foreseeable tip overs that remain unaddressed in the currently balloted changes.

CPSC staff asserts that requirements like those in the NPR are necessary to address the hazard of CSU tip over and urges ASTM to adopt the NPR requirements in the ASTM F2057 voluntary standard.

Sincerely,

KRISTEN TALCOTT Digitally signed by KRISTEN TALCOTT
Date: 2022.08.16 16:55:18 -04'00'

Kristen Talcott

---

[1] The views or opinions expressed in this letter are solely those of the staff, and these views and opinions do not necessarily represent those of the Commission.
[2] Consumer Product Safety Commission (2022). Safety Standard for Clothing Storage Units: Notice of proposed rulemaking. 87 Fed. Reg. 6246 (February 3, 2022). Docket No. CPSC-2017-0044. Available: https://www.federalregister.gov/documents/2022/02/03/2022-01689/safety-standard-for-clothing-storage-units
[3] CPSC Staff (2021). Staff Briefing Package: Draft Notice of Proposed Rulemaking for Clothing Storage Units. July 2021. Available: https://cpsc.gov/s3fs-public/Proposed%20Rule-%20Safety%20Standard%20for%20Clothing%20Storage%20Units.pdf?OcybMVfa9ANi6sqiog7qkeNP48c_uz0T.

U.S. Consumer Product Safety Commission
4330 East-West Highway
Bethesda, MD 20814

National Product Testing & Evaluation Center
5 Research Place
Rockville, MD 20850

Project Manager, Clothing Storage Units
Division of Human Factors, Directorate for Engineering Sciences

cc: Molly Lynyak, Manager, Technical Committee Operations
Jacqueline Campbell, CPSC Voluntary Standards Coordinator

TAB G: Recommended Regulatory Text for Draft Final Rule

This page intentionally left blank.

United States
Consumer Product Safety Commission

Memorandum

TO: The File

DATE: September 28, 2022

THROUGH: Duane Boniface, Assistant Executive Director,
Office of Hazard Analysis and Reduction (EXHR)

FROM: Furniture Tip-Over EXHR Team

SUBJECT: Recommended Regulatory Text for Draft Final Rule

Introduction

This memorandum includes the regulatory text that staff recommends including in the draft final rule. This regulatory text includes general provisions, such as scope and definitions, as well as the recommended requirements for stability testing and assessment (discussed in more detail in Tab D), warning labels (discussed in more detail in Tab C), and hang tags (discussed in more detail in Tab E).

Recommended Regulatory Text

PART 1261—SAFETY STANDARD FOR CLOTHING STORAGE UNITS

Sec.

1261.1 Scope, purpose, application, and exemptions.

1261.2 Definitions.

1261.3 Requirements for interlocks.

1261.4 Requirements for stability.

1261.5 Requirements for marking and labeling.

1261.6 Requirements to provide performance and technical data by labeling.

Authority: 15 U.S.C. 2051(b), 2056, 2058, 2063(c), 2076(e)

U.S. Consumer Product Safety Commission
4330 East-West Highway
Bethesda, MD 20814
cpsc.gov

National Product Testing & Evaluation Center
5 Research Place
Rockville, MD 20850

§ 1261.1 Scope, Purpose, Application, and Exemptions

(a) Scope and purpose. This part, a consumer product safety standard, prescribes the safety requirements, including labeling and hang tag requirements, for *clothing storage units*, as defined in § 1261.2(a). These requirements are intended to reduce or eliminate an unreasonable risk of death or injury to consumers from clothing storage unit tip overs.

(b) Application. Except as provided in paragraph (c) of this section, all clothing storage units that are manufactured after [effective date], are subject to the requirements of this part 1261.

(c) Exemptions. The following products are exempt from this part:

(1) *Clothes lockers*, as defined in § 1261.2(b), and

(2) *Portable storage closets*, as defined in § 1261.2(t).

§ 1261.2 Definitions

In addition to the definitions given in section 3 of the Consumer Product Safety Act (15 U.S.C. 2052), the following definitions apply for purposes of this part:

(a) *Clothing storage unit* (*CSU*) means a consumer product that is a *freestanding* furniture item, with *drawer(s)* and/or *door(s)*, that may be reasonably expected to be used for storing clothing, that is designed to be configured to greater than or equal to 27 inches in height, has a mass greater than or equal to 57 pounds with all *extendable elements* filled with at least 8.5 pounds/cubic foot times their *functional volume* (cubic feet), has a total *functional volume* of the *closed storage* greater than 1.3 cubic feet, and has a *total functional volume* of the *closed storage* greater than the sum of the total *functional volume* of the *open storage* and the total volume of the *open space*. Common names for clothing storage units include, but are not limited to: chests, bureaus, dressers, armoires, wardrobes, chests of drawers, drawer chests, chifforobes, and door chests. Whether a product is a clothing storage unit depends on whether it meets this definition. Some products that, depending on their design, may not meet the criteria in this definition and, therefore, may not be considered clothing storage units are: shelving units, office furniture, dining room furniture, laundry hampers, built-in closets, and single-compartment closed rigid boxes (storage chests).

(b) *Clothes locker* means a predominantly metal furniture item without exterior drawers and with one or more doors that either locks or accommodates an external lock.

(c) *Closed storage* means storage space inside a *drawer* and/or behind an opaque *door*. For this part, both sliding and hinged doors are considered in the definition of *closed storage*.

(d) *Door* means a hinged furniture component that can be opened or closed, typically outward or downward, to form a barrier; or a sliding furniture component that can be opened or closed by sliding across the face or case of the furniture item. This does not include vertically opening hinged lids.

(e) *Door extension from fulcrum distance* means the horizontal distance measured from the farthest point of a hinged door that opens outward or downward, while the door is in the least stable configuration (typically 90 degrees), to the *fulcrum*, while the CSU is on a *hard, level, and flat test surface*. See Figure 1. Sliding doors that remain within the CSU case are not considered to have a door extension.

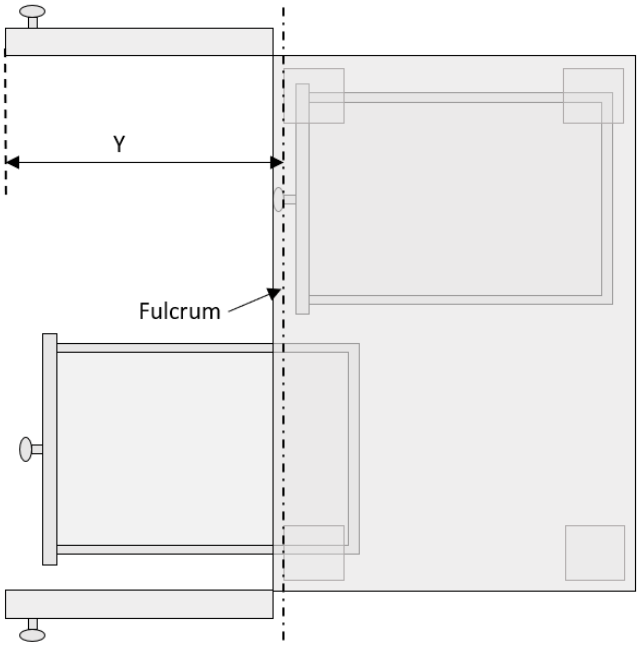

Figure 1. (Top View) The *door extension from fulcrum distance,* illustrated by the letter Y.

(f) *Drawer* means a furniture component intended to contain or store items that slides horizontally in and out of the furniture case and may be attached to the case by some means, such as glides. Only components that are retained in the case when extended up to 2/3 the shortest internal length, when empty, are included in this definition.

(g) *Extendable element* means a *drawer* or *pull-out shelf.*

(h) *Extendable element extension from fulcrum distance* means the horizontal distance measured from the centerline of the front face of the *drawer* or the outermost surface of the *pull-out shelf* to the *fulcrum*, when the *extendable element* is at the *maximum extension* and the CSU is on a *hard, level, and flat test surface*. For a curved or angled surface this measurement is taken where the distance is at its greatest. See Figure 2.

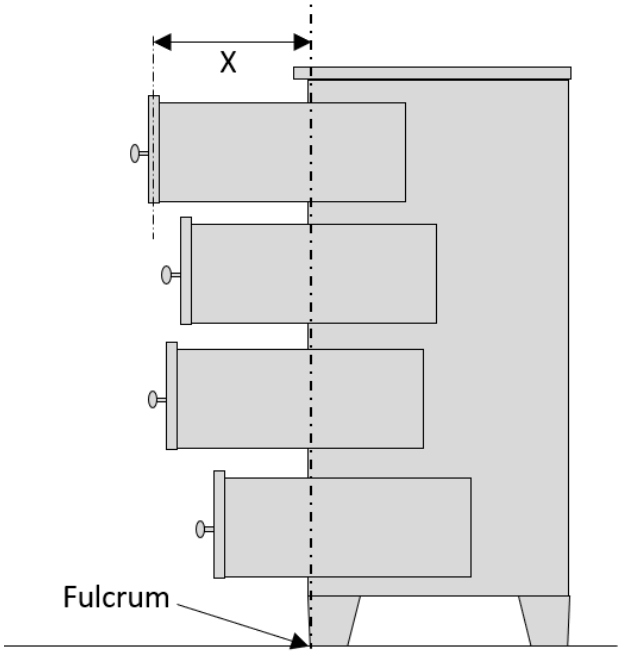

Figure 2. The *extendable element extension from fulcrum distance*, illustrated by the letter X.

(i) *Freestanding* means that the unit remains upright, without needing attachment to the wall or other upright rigid structure, when it is fully assembled and empty, with all extendable elements and doors closed. Built-in units are not considered freestanding.

(j) *Functional volume* of an *extendable element* means the interior bottom surface area multiplied by the effective *extendable element* height, which is distance from the bottom surface of the *extendable element* to the top of the *extendable element* compartment minus 1/8 inches (see Figure 3a). *Functional volume* behind a *door* means the interior bottom surface area behind the *door*, when the *door* is closed, multiplied by the height of the storage compartment (see Figure 3b). *Functional volume* of *open storage* means the interior bottom surface area multiplied by the effective *open storage* height, which is distance from the bottom surface of the *open storage* to the top of the *open storage* compartment minus 1/8 inches.

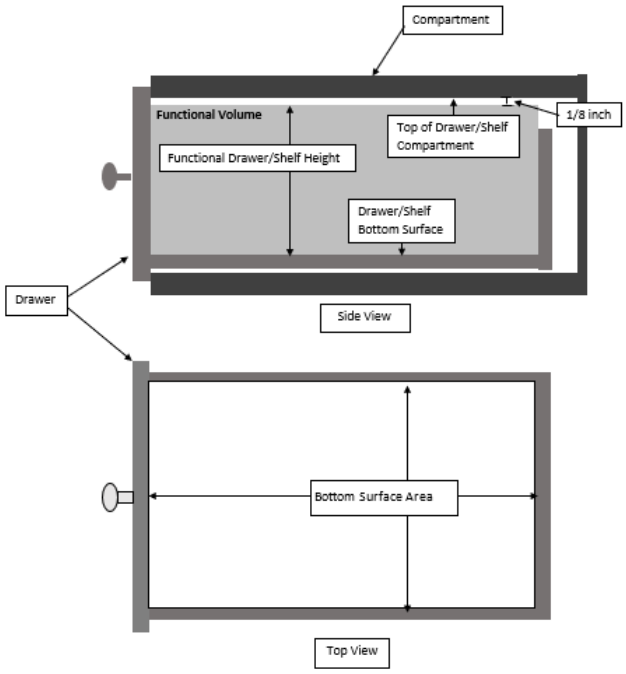

Figure 3a. *Functional Volume* of extendable elements.

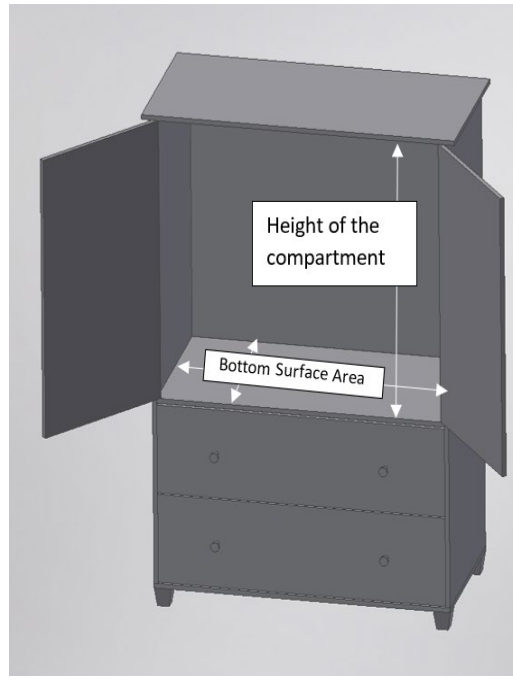

Figure 3b. *Functional Volume* behind a Door.

(k) *Fulcrum* means the point or line at the base of the CSU about which the CSU pivots when a *tip-over force* is applied (typically the front feet). The *fulcrum* position is determined while the CSU is on a *hard, level, and flat test surface* with all *doors* and *extendable elements* closed.

(l) *Hard, level, and flat test surface* means a test surface that is (1) sufficiently hard to not bend or break under the weight of a *clothing storage unit* and any loads associated with testing the unit; (2) level with no more than 0.5 degrees of variation; and (3) smooth and even.

(m) *Interlock* means a device(s) that restricts simultaneous opening of *extendable elements* or *doors*.

(n) *Levelling device* means an adjustable device intended to adjust the level of the clothing storage unit.

(o) *Maximum extension* means a condition when an *extendable element* is open to the furthest manufacturer recommended use position, as indicated by way of a stop. In the case of slides with multiple intermediate stops, this is the stop that allows the *extendable element* to extend the furthest. In the case of slides with a multipart stop, such as a stop that extends the *extendable element* to the furthest manufacturer recommended use position with an additional stop that retains the *extendable element* in the case, this is the

stop that extends the *extendable element* to the manufacturer recommended use position. If the manufacturer does not provide a recommended use position by way of a stop, this is 2/3 the shortest internal length of the *drawer* measured from the inside face of the drawer front to the inside face of the *drawer* back or 2/3 the shortest internal length of the *pull-out shelf*. See Figure 4.

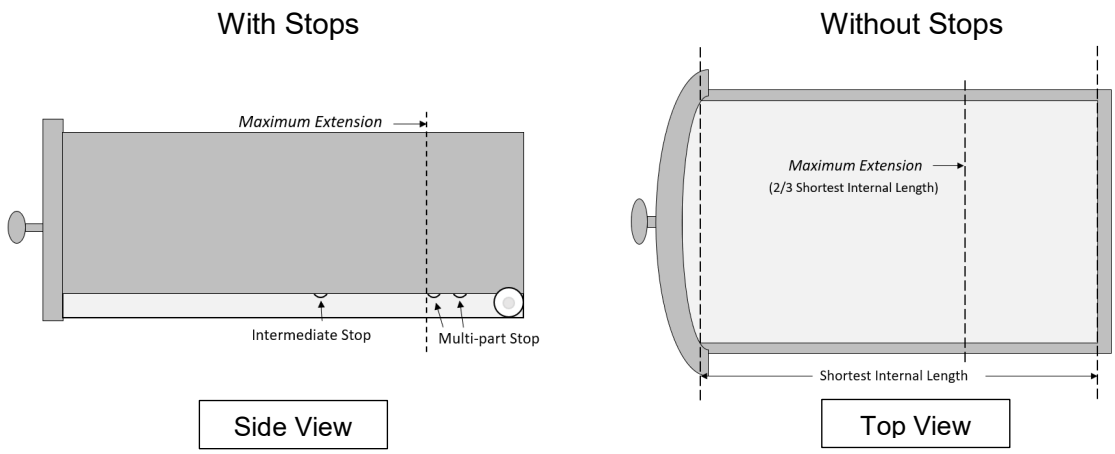

Figure 4. Example of *maximum extension* on *extendable elements* with stops and without stops.

(p) *Maximum handhold height* means the highest position at which a child may grab hold of the CSU, measured while the CSU is on a *hard, level, and flat test surface*. For units shorter than 4.12 feet, this is the top of the CSU. For units 4.12 feet or taller, this is 4.12 feet. See Figure 5.

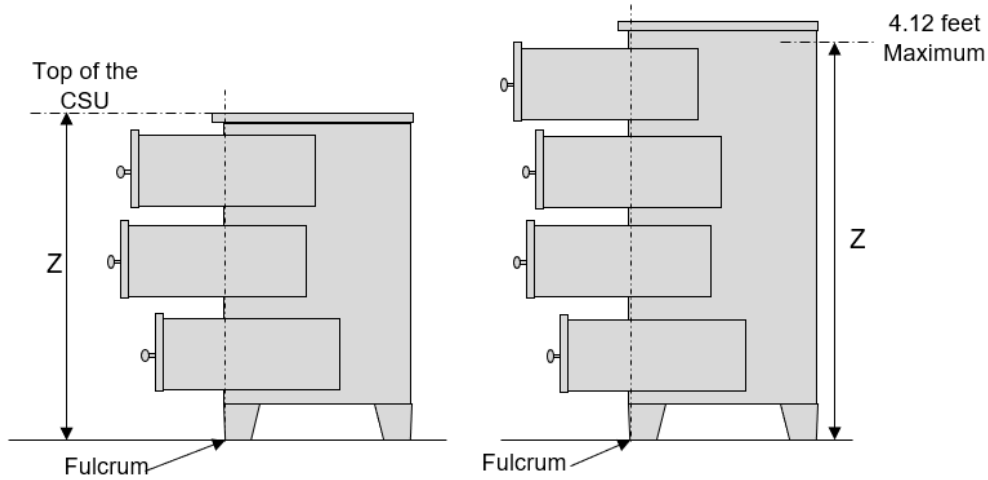

Figure 5. The *maximum handhold height*, illustrated by the letter Z for a unit shorter than 4.12 feet (left), and for units 4.12 feet or taller (right).

(q) *Moment* means a moment of a force, which is a measure of the tendency to cause a body to rotate about a specific point or axis. It is measured in pound-feet, representing a force multiplied by a lever arm, or distance from the force to the point of rotation.

(r) *Open storage* means space within the frame of the furniture, that is open (*i.e.*, is not in a *drawer* or behind an opaque *door*) and that can be reasonably used for storage (*e.g.*, has a flat bottom surface). For example, open shelf space that is not behind a *door*, display space behind a non-opaque *door*, and framed open clothing hanging space are considered *open storage*.

(s) *Open space* means space within the frame of the furniture, but without a bottom surface. For example, open space between legs, such as with a console table, or between separated storage components, such as with a vanity or a desk, are considered open space. This definition does not include space inside the furniture case *(e.g.*, space between a drawer and the case) or any other space that is not visible to a consumer standing in front of the unit *(e.g.*, space behind a base panel).

(t) *Portable storage closet* means a freestanding furniture item with an open frame that encloses hanging clothing storage space and/or shelves. This item may have a cloth case with curtain(s), flap(s), or door(s) that obscure the contents from view.

(u) *Pull-out shelf* means a furniture component with a horizontal flat surface that slides horizontally in and out of the furniture case and may be attached to the case by some means, such as glides.

(v) *Test block* means a block constructed of a rigid material such as steel or aluminum with the following minimum dimensions: at least 0.43 inch thick, at least 1 inch deep, at least 1 inch wide. See Figure 6.

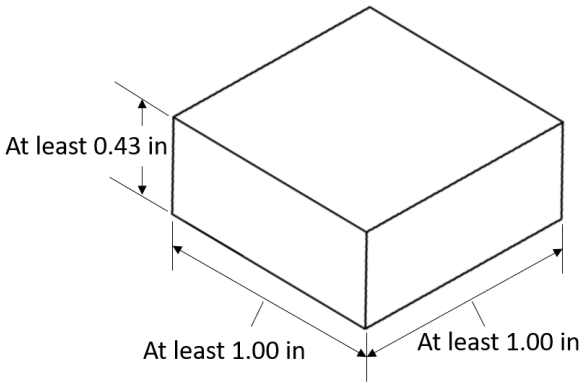

Figure 6. Test block.

(w) *Tip over* means an event at which a clothing storage unit pivots forward to the point at which the CSU will continue to fall and/or be supported by a non-support element.

(x) *Tip-over force* means the force required to cause *tip over* of the clothing storage unit.

(y) *Tip-over moment* means the minimum *moment* in pounds-feet about the *fulcrum* that causes *tip over*.

§ 1261.3 Requirements for Interlocks

(a) *General*. For all *clothing storage units* with *interlocks*, including consumer-assembled units, the *interlock* components must be pre-installed, and automatically engage when the consumer installs the *interlocked extendable element(s)* or *door(s)* in the unit. All *interlocks* must engage automatically as part of normal use.

(b) *Interlock pull test*.

(1) If the unit is not fully assembled, assemble the unit according to the manufacturer's instructions.

(2) Place the unit on a *hard, level, and flat test surface*.

(3) If the unit has one or more *levelling devices*, adjust the *levelling device(s)* to the lowest level; then adjust the *levelling device(s)* in accordance with the manufacturer's instructions.

(4) Secure the unit, without interfering with the interlock function, to prevent sliding or *tip over*.

(5) Open any non-interlocked *doors* that are in front of *interlocked extendable elements*.

(6) Engage the *interlock* by opening to the maximum extension the number of *extendable elements* or *doors* necessary to engage the interlock.

(7) Gradually apply over a period of at least 5 seconds a 30-pound horizontal pull force on each *interlocked extendable element* or *door* at the center of the pull area(s), one element at a time, and hold the force for at least 10 seconds.

(8) Repeat this test until all possible combinations of *extendable elements* and *doors* have been tested.

(c) *Performance Requirement*. The *interlock* will be disabled or bypassed for the stability testing in § 1261.4(c) if, as a result of the testing specified in paragraph (b) of this section:

(1) any *interlocked extendable element* or *door* extends during the test without retracting the originally open *extendable element* or *door*; or

(2) any *interlock* or *interlocked extendable element* or *door* is damaged or does not function as intended after the test.

§ 1261.4 Requirements for Stability

(a) *General. Clothing storage units* shall be configured as described in paragraph (b) of this section, and tested in accordance with the procedure in paragraph (c) of this section. *Clothing storage unit*s shall meet the requirement for tip-over stability based on the *tip-over moment* as specified in paragraph (d) of this section.

(b) *Test Configuration:* The *clothing storage unit* used for tip-over testing shall be configured in the following manner:

(1) If the unit is not fully assembled, assemble the unit according to the manufacturer's instructions. Units shall not be attached to the wall or any upright structure for testing.

(2) Place the unit on a *hard, level, and flat test surface* in the orientation most likely to cause *tip over*. If necessary, secure the unit from sliding without preventing *tip over*.

(3) If the unit has one or more *levelling devices*, adjust the *levelling devices* to the lowest level; then adjust the *levelling devices* in accordance with the manufacturer's instructions.

(4) Record the *maximum handhold height,* the longest *extendable element extension from fulcrum distance,* and the longest *door extension from fulcrum distance*, as applicable. These measurements are used in § 1261.4(d).

(5) Tilt the unit forward by placing the *test block(s)* under the unit's most rear floor support(s) such that either the entire floor support contact area is over the *test block(s),* or the back edge of the *test block(s)* is aligned with the back edge of the rear floor supports.

(6) Disable or bypass any *interlock(s)* as necessary per § 1261.3(c).

(7) Open all hinged *doors* that open outward or downward that are not locked by an *interlock* system to the least stable configuration (typically 90 degrees).

(8) Open all *extendable elements* that are not locked by an *interlock* system to the *maximum extension*, in the configuration most likely to cause *tip over* (typically the configuration with the largest *drawers* in the highest position open). Then place fill weights according to the following criteria:

(i) If 50 percent or more of the *extendable elements* by *functional volume* are open, place a fill weight in the center of the bottom surface of each *extendable element*, including those that remain closed (see Figure 7a), consisting of a uniformly distributed mass in pounds. The fill weight in open *extendable elements must be* at least 8.5 (pounds/cubic foot) times the *functional volume* (cubic feet). The fill weight in closed *extendable*

elements must be no more than 8.5 (pounds/cubic foot) times the *functional volume*. If necessary, secure the fill weights to prevent sliding.

(ii) If less than 50 percent of the *extendable elements* by *functional volume* are open, do not place a fill weight in or on any *extendable elements* (see Figure 7b).

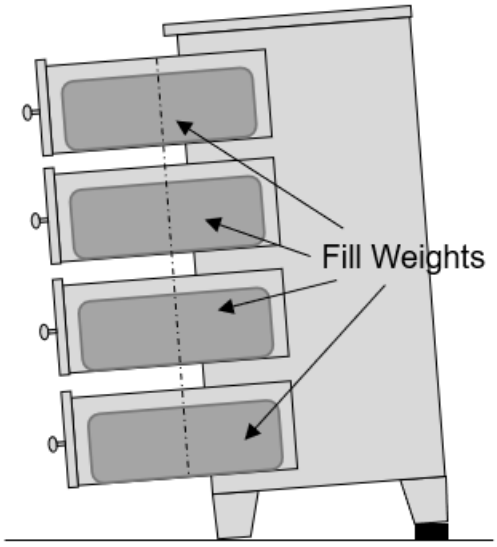

Figure 7a. If 50% or more of the *extendable elements* open, unit tested with fill weights in all drawers.

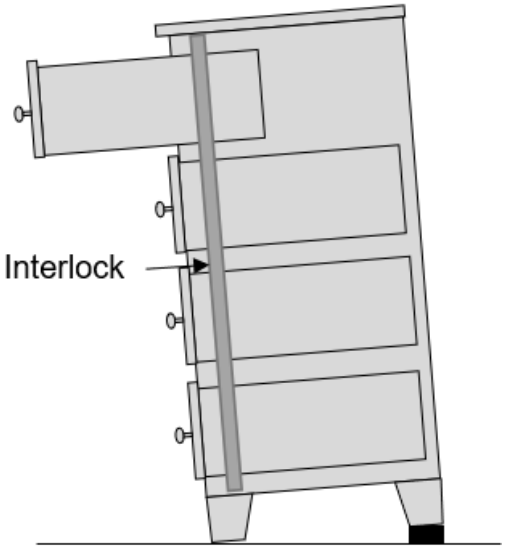

Figure 7b. If less than 50% of the *extendable elements* open, unit tested empty.

(c) *Test Procedure to Determine Tip-over Moment of the Unit:* Perform one of the following two tip-over tests (Test Method 1 or Test Method 2), whichever is the most appropriate for the unit:

(1) Test Method 1 shall be used for units with *extendable elements* that extend at least 6 inches from the *fulcrum*. Record the horizontal distance from where the center of force will be applied (the center of gravity of the weights to be applied) to the fulcrum. Gradually apply over a period of at least 5 seconds weights to the face of an extended *extendable element* of the unit to cause the unit to *tip over*. The weights are to be placed on a single *drawer* face or distributed evenly across multiple *drawer* faces or as adjacent as possible to the *pull-out shelf* face. The weights shall not interfere with other extended *extendable elements*. Record the *tip-over force*. Calculate the *tip-over moment* of the unit by multiplying the *tip-over force* (pounds) by the horizontal distance from the center of force application to the *fulcrum* (feet).

(2) Test Method 2 shall be used for any unit for which Test Method 1 does not apply. Record the vertical distance from where the center of force will be applied to the fulcrum. Gradually apply over a period of at least 5 seconds a horizontal force to the unit orthogonal to the *fulcrum* to cause the unit to *tip over*. Record the *tip-over force*. Calculate the *tip-over moment* of the unit by multiplying the *tip-over force* (pounds) by the vertical distance from the center of force application to the *fulcrum* (feet).

(3) If a failed component prohibits completion of the test, then to continue testing, the failed component(s) must be repaired or replaced to the original specifications, or the component replaced and the test repeated with the failed component secured to prevent the component from failing, as long as the modifications do not increase the tip-over moment.

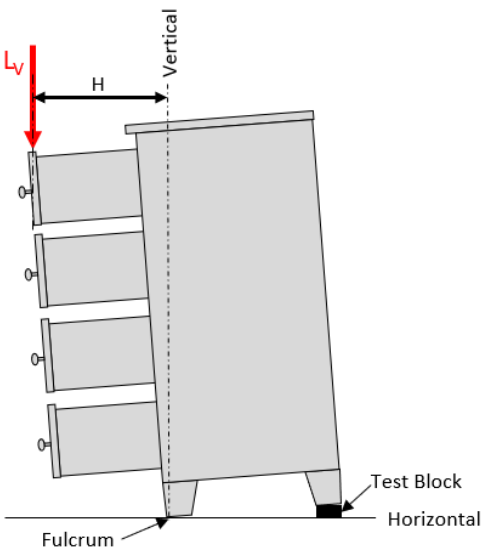

Figure 8a) Test Method 1.

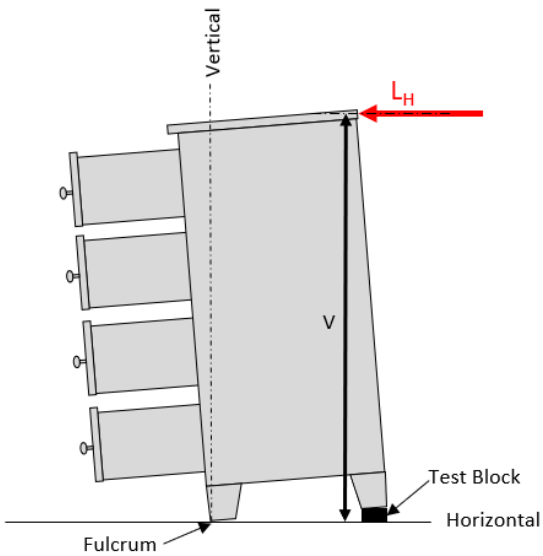

Figure 8b) Test Method 2.

Figure 8. Illustration of force application methods (*test block* not to scale): a) Test Method 1 with vertical load L_V, and b) Test Method 2 with horizontal load L_H.

(d) *Performance requirement:* The *tip-over moment* of the *clothing storage unit* must be greater than the threshold moment, which is the greatest of all of the following applicable moments:

(1) [for units with *extendable element(s)*] 55.3 pounds times the *extendable element extension from fulcrum distance* in feet + 26.6 pounds feet;

(2) [for units with a *door(s)*] 51.2 pounds times the *door extension from fulcrum distance* in feet – 12.8 pounds feet; and

(3) [for all units] 17.2 pounds times *maximum handhold height* in feet.

§ 1261.5 Requirements for Marking and Labeling

(a) *Warning Label Requirements:* The *clothing storage unit* shall have a warning label, as defined below.

(1) *Size.* The warning label shall be at least 2 inches wide by 2 inches tall.

(2) *Content.*

(i) The warning label shall contain the following text, with the text following brackets to be included only for the units specified in brackets:

Children have died from furniture tip over. To reduce the risk of tip over:

- ALWAYS secure this furniture to the wall using an anti-tip device.
- NEVER allow children to stand, climb, or hang on drawers, doors or shelves.
- [for units with interlocks only] Do not defeat or remove the drawer interlock system.
- Place heaviest items in the lowest drawers.
- [for units that are not designed to hold a television only] NEVER put a TV on this furniture.

(ii) The warning label shall contain the three panel child climbing symbol displayed in Figure 9. The third panel (*i.e.*, depicting attachment to the wall) may be modified to show a specific anti-tip device included with the clothing storage unit.

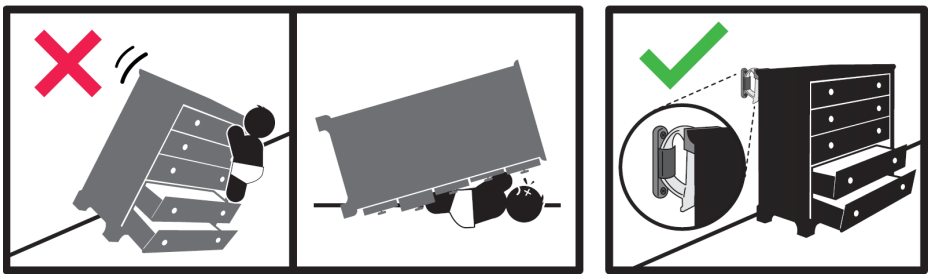

Figure 9. Three panel child climbing symbol.

(iii) For units that are not designed to hold a television: the warning label shall also contain the no television symbol displayed in Figure 10.

Figure 10. No television symbol.

(iv) The content of the warning label required in this paragraph (a)(2) shall not be modified or amended except as specifically indicated.

(3) *Format:* The warning label shall use the signal word panel content and format specified in ASTM F2057-19, Section 8.2.2, and the font, font size, and color specified in ASTM F2057-19, Section 8.2.3, as shown in Figure 7. [will include incorporation by reference language]. Each safety symbol shall measure at least 1 inch by 1 inch.

(4) *Location:*

(i) For units with one or more *drawer(s)*:

(A) The warning label shall be located on the interior side panel of a drawer in the upper most *drawer* row, or if the top of the *drawer(s)* in the upper most *drawer* row is more than 56 inches from the floor, on the interior side panel of a *drawer* in the upper most *drawer* row below 56 inches from the floor, as measured from the top of the *drawer*.

(B) The top left corner of the warning label shall be positioned within 1 inch of top of the *drawer* side panel and within the front 1/3 of the interior *drawer* depth.

(ii) For units with only *doors*:

(A) The warning label shall be located on an interior side or back panel of the cabinet behind the *door(s)*, or on the interior *door* panel. The warning label shall not be obscured by a shelf or other interior element.

(iii) For consumer-assembled units:

(A) The warning label shall be pre-attached to the panel, and the assembly instructions shall direct the consumer to place the panel with the warning label according to the placement requirements above.

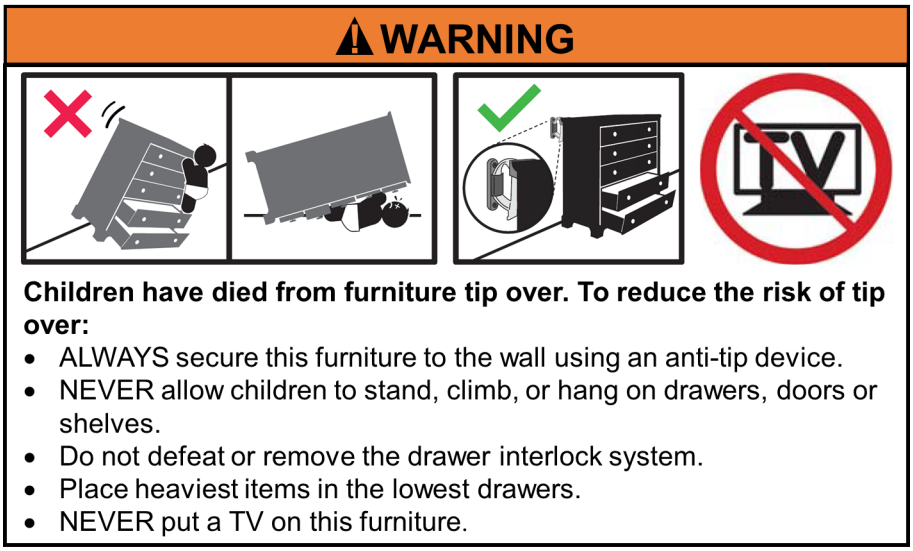

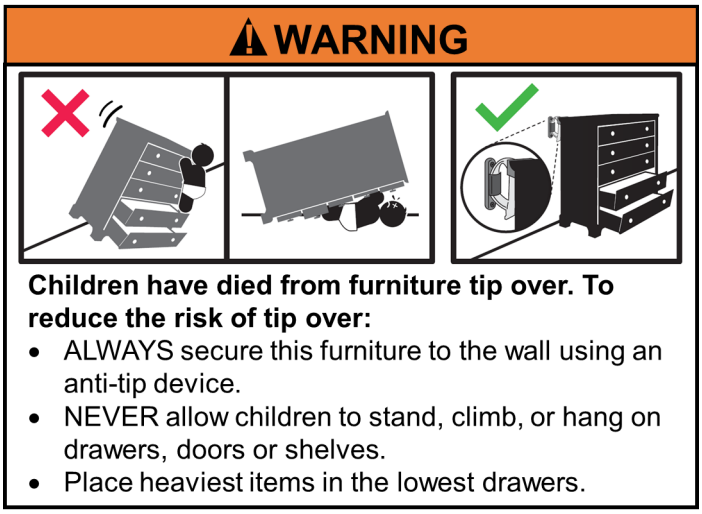

Figure 10. Example warning label for a CSU with an interlock system and not designed to hold a television (top) and for a CSU without an interlock system and designed to hold a television (bottom).

(5) *Permanency:* The warning label shall be legible and attached after it is tested using the methods specified in ASTM F2057 – 19 Section 7.3, Permanency of Labels and Warnings Testing. [Note: this will include incorporation by reference language]

(b) Identification Marking or Labeling Requirements: The clothing storage unit shall have an identification mark or label, as defined below.

(1) *Size.* The identification mark or label shall be at least 2 inches wide by 1 inch tall,

(2) *Content.* The identification mark or label shall contain the following:

(i) Name and address (city, state, and zip code) of the manufacturer, distributor, or retailer; the model number; and the month and year of manufacture.

(ii) The statement "Complies with U.S. CPSC Safety Standard for Clothing Storage Units" as appropriate; this label may spell out "U.S. Consumer Product Safety Commission" instead of "U.S. CPSC."

(3) *Format:* The identification mark or label text shall not be less than 0.1 in. (2.5 mm) capital letter height. The text and background shall be contrasting colors (*e.g.* black text on a white background).

(4) *Location:* The identification mark or label shall be visible from the back of the unit when the unit is fully assembled.

(5) Permanency: The identification mark or label shall be legible and attached after it is tested using the methods specified in ASTM F2057-19 Section 7.3, Permanency of Labels and Warnings Testing [will include incorporation by reference language].

§ 1261.6 Requirements to Provide Performance and Technical Data by Labeling

Manufacturers of clothing storage units shall give notification of performance and technical data related to performance and safety to prospective purchasers of such products at the time of original purchase and to the first purchaser of such product for purposes other than resale, in the manner set forth below:

(a) Consumer information requirements for physical points of sale, packaging, and on-product: The manufacturer shall provide a hang tag with every clothing storage unit that provides the ratio of tip-over moment as tested to the minimally allowed tip-over moment of that model clothing storage unit. The label must conform in content, form, and sequence to the hang tag shown in Figure 1.

(1) *Size.* Every hang tag shall be at least 5 inches wide by 7 inches tall.

(2) *Side 1 Content.* The front of every hang tag shall contain the following:

(i) The title – "TIP OVER GUIDE."

(ii) The icon:

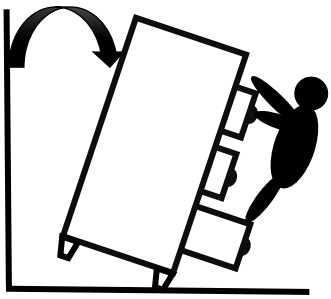

(iii) The statement – "Stability Rating."

(iv) The manufacturer's name and model number of the unit.

(v) Ratio of tip-over moment, as tested per § 1261.4(c), to the threshold moment, as determined per § 1261.4(d), of that model CSU displayed on a progressive scale. This value shall be the stability rating, rounded to one decimal place (e.g., X.Y).

(vi) The scale shall start at 1 and end at 2.

(vii) "MIN" and "OR MORE" on the left and right sides of the scale, respectively.

(viii) A solid horizontal line from 1 to the calculated rating.

(ix) The statement - This unit is [MANUFACTURER TO ENTER RATING VALUE] times more stable than the minimum required.

(x) The statement – "Compare with other units before you buy."

(xi) The statement – "This is a guide to compare units' resistance to tipping over."

(xii) The statement – "Higher numbers represent more stable units."

(xiii) The statement – "No unit is completely safe from tip over."

(xiv) The statement – "Always secure the unit to the wall."

(xv) The statement – "Tell children not to climb furniture."

(xvi) The statement – "See back side of this tag for more information."

(xvii) The statement – "THIS TAG NOT TO BE REMOVED EXCEPT BY THE CONSUMER."

(3) *Side 2 Content.* The reverse of every hang tag shall contain the following:

(i) The statement – "Stability Rating Explanation."

(ii) The icon in (2)(ii).

(iii) The stability rating determined in (2)(v).

(iv) The statement – "Test data on this unit indicated it withstood [insert rating determined in (2)(v)] times the minimally acceptable moment, per tests required by the U.S. Consumer Product Safety Commission (see below)," with the stability rating to be inserted for bracketed text.

(v) The statement – "Deaths and serious crushing injuries have occurred from furniture tipping over onto people."

(vi) The statement – "To reduce tip-over incidents, the U.S. Consumer Product Safety Commission (CPSC) requires that clothing storage units, such as dressers, chests, bureaus, and armoires, resist certain tip-over forces. The test that CPSC requires measures the stability of a clothing storage unit and its resistance to rotational forces, also known as moments. This test is based on threshold rotational forces of a 3-year-old child climbing up, hanging on, or pulling on drawers and/or doors of this unit. These actions create rotational forces (moments) that can cause the unit to tip forward and fall over. The stability rating on this tag is the ratio of this unit's tip-over moment (using CPSC's test) and the threshold tip-over moment. More information on the test method can be found in 16 CFR 1261."

(4) *Format.* The hang tag shall be formatted as shown in Figure 1. The background of front of the label shall be printed in full bleed process yellow or equivalent; the background of the back of the label shall be white. All type and graphics shall be printed in process black.

(5) *Attachment.* Every hang tag shall be attached to the CSU and clearly visible to a person standing in front of the unit. The hang tag shall be attached to the CSU and lost or damaged hang tags must be replaced such that they are attached and provided, as required by this section, at the time of original purchase to prospective purchasers and to the first purchasers other than resale. The hang tags may be removed only by the first purchaser.

(b) *Placement*. The hang tag shall appear on the product and the immediate container of the product in which the product is normally offered for sale at retail. Ready-to-assemble furniture shall display the hang tag on the main panel of consumer-level packaging. The hang tag shall remain on the product/container/packaging until the time of original purchase. Any units shipped directly to consumers shall contain the hang tag on the immediate container of the product.

(b) Consumer Information Requirements for Online Points of Sale: Any manufacturer or importer of a clothing storage unit with an online sales interface (*e.g.*, website or app) from which the clothing storage unit may be purchased, shall provide on the online sales interface that offers the clothing storage unit for purchase:

(i) all of the content required by subparagraph (a)(2) and (a)(3) of this section in the form and sequence shown in Figure 11, except that it need not contain the statements in subparagraph (a)(2)(xvi) or (a)(2)(xvii) of this section.

(ii) The stability rating must be displayed in a font size equivalent to that of the price; in proximity to the price of the product; and a link to the virtual hang tag of the product must be provided through one user action (*e.g.*, mouse click, mouse roll-over or tactile screen expansion) on the stability rating value or image.

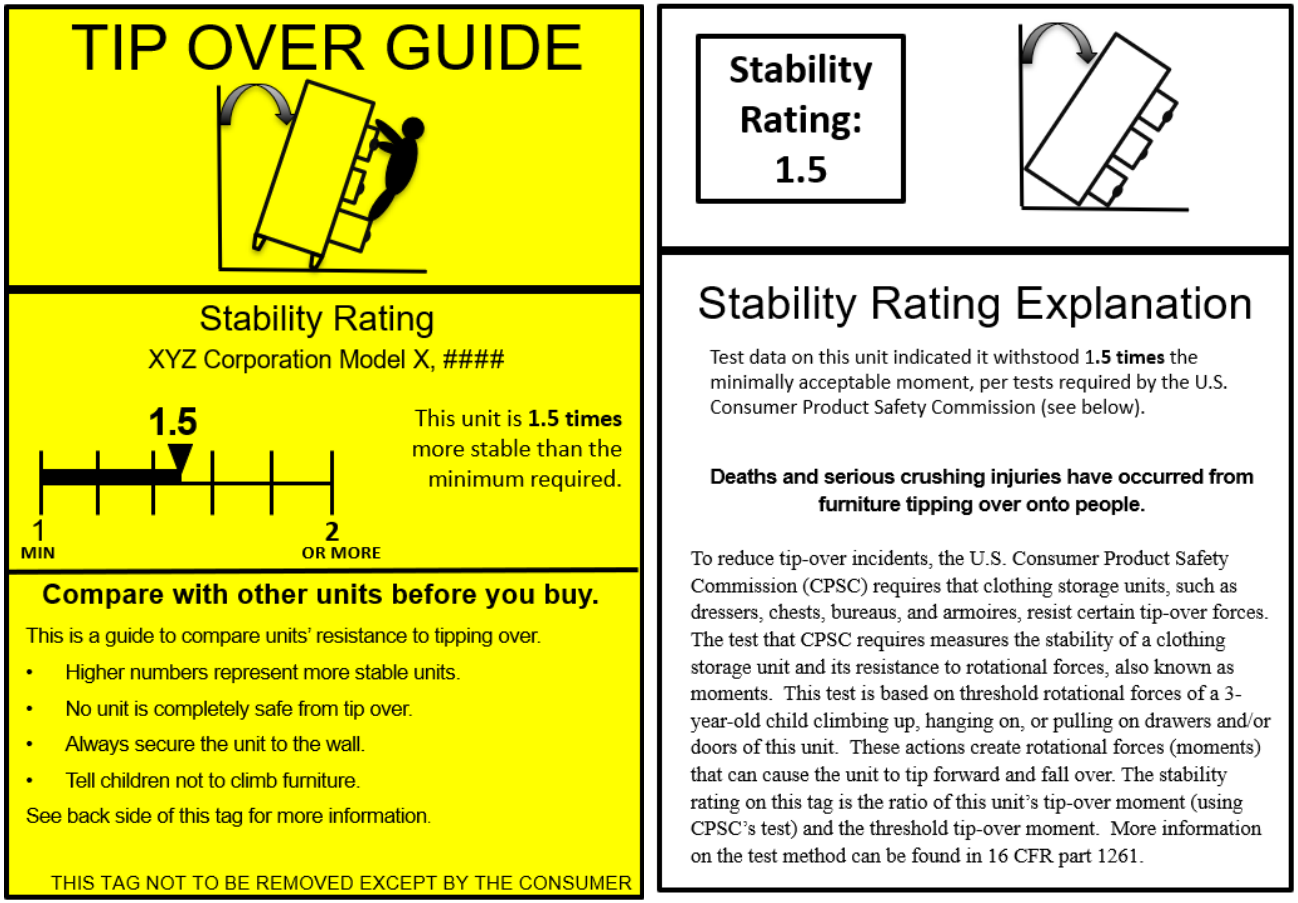

Figure 11. Hang Tag example shown for a unit with a stability rating of 1.5.

This page intentionally left blank.

TAB H: Final Regulatory Analysis of the Clothing Storage Unit Draft Final Rule

This page intentionally left blank.

Final Regulatory Analysis of the Clothing Storage Unit Draft Final Rule

Jose Tejeda
Charles Smith
Directorate for Economic Analysis
U.S. Consumer Product Safety Commission
August 10, 2022

This page intentionally left blank

Table of Contents

Executive Summary

The U.S. Consumer Product Safety Commission (CPSC, or Commission) staff has prepared a draft final rule that would establish stability and other requirements for clothing storage units (CSUs). CSUs are freestanding furniture with drawers and/or doors that are designed to store clothing.[1] CSU examples include chests of drawers, bureaus, dressers, armoires, and wardrobes. On February 3, 2022, the Commission published in the Federal Register (87 Fed. Reg. 6246) the notice of proposed rulemaking (NPR) concerning the risk of injuries and deaths associated with CSUs tipping over. The purpose of this draft final rule is to prevent an unreasonable risk of deaths and injuries from CSU tip overs. This memorandum builds on the information presented in the Preliminary Regulatory Analysis from the NPR, and also includes an analysis of updated incident data and data received through public comments.

From 2007 through 2021, there was an average of 4 deaths and 6,867 medically attended injuries to children per year resulting from CSU tip overs. There has also been an average of 1.5 deaths and 4,921 medically attended injuries to adults per year across the same time period. These averages are based on information from the Directorate for Epidemiology and estimates from CPSC's Injury Cost Model (ICM). These averages exclude incidents in which a television was involved.[2] The benefits of the draft final rule are the mitigation of these deaths and injuries. CPSC staff estimated the total benefits of the draft final rule to be $307.17 million annually. CPSC staff calculated the draft proposed rule's per-unit annual benefits to be $1.34 per CSU.[3] Over the estimated 15-year useful life of a CSU, this comes to $15.95 per CSU, using a 3 percent discount rate.[4]

The CSU industry would incur the cost of redesigning CSUs during the 180 days of implementation of the rule. Compliance with the draft final rule would require additional labor and materials cost to manufacture CSUs, as well as additional cost to redesign existing CSU models, and test new CSU models to verify conformity with the standard.[5] Future CSU models would use the features of the redesigned models to comply with the rule. CSU testing, however, is expected to be a recurring annual cost, as new models would have to be tested to

[1] See Tab G for a full definition of CSUs.
[2] CPSC staff focused on the subset of tip-over incidents involving children and CSUs without televisions primarily because the majority of fatal and nonfatal incidents involve children and, in recent years, there was a statistically significant decrease in the number of CSU tip-over incidents that appeared to be driven by a decline in tip overs involving televisions. Most incidents involving TVs are related to older cathode ray tube (CRT) televisions, which have fallen out of use, and are rarely available in homes across the U.S.
[3] Calculated by dividing the total annual benefits ($307.17 million) by the number of CSUs in use (229.94 million).
[4] CPSC staff uses a discount rate for future benefits and costs to account for the time value of money.
[5] The Preliminary Regulatory Analysis in the NPR briefing package did not specifically include cost estimates for model redesign and testing. CPSC staff have developed an estimate for both model redesign and testing costs in response to multiple comments from industry on the Preliminary Regulatory Analysis, including large furniture industry trade associations.

verify compliance with the standard. CPSC staff estimated the total cost to comply with this rule would be $250.90 million during the first year of implementation of the rule, using the average costs of multiple modification options. The cost could be as little as $174.22 million per year if manufacturers pursue the lowest-cost option for every CSU model. However, the CSU market, and the furniture market in general, has a wide variety of designs and price points to target different customers. The large range of prices for CSUs, ranging from about $100 to several thousand dollars, reflects that market segmentation. Some manufacturers do not have target markets that are amenable to low-cost features. Thus, CPSC staff assesses that the average cost is a better estimate of the real-world impact from the draft final rule and used the average costs for modifications in the cost assessment of this regulatory analysis. CPSC staff estimated the per-unit cost to comply with the draft final rule is between $10.21 and $17.64 for redesign, modifications (including labor and materials), and testing, based on five archetype representative models of CSUs.[6]

CPSC staff estimated the benefits of the draft final rule per CSU, at a 3 percent discount rate, to be $15.95. When compared to the five CSU representative models per-unit costs of between $10.21 and $17.64, the benefits of the draft final rule generally meet or exceed the costs. Two of the five representative CSUs have costs that are above the benefits per CSU, while the remaining three representative models have costs below the benefits per CSU.

Finally, CPSC staff considered whether the Commission could rely on the current voluntary standard, ASTM F2057 – 19, and concluded that it does not adequately protect consumers from CSU tip overs. CPSC also considered several policy alternatives, including the revised ASTM standard in ballot, and concluded that these less-stringent alternatives, while they might have lower costs, would not sufficiently reduce deaths and injuries.

1. Introduction

The CPSC is considering a rule to establish a mandatory stability and other requirements for CSUs. CPSC initiated this rulemaking proceeding on November 30, 2017, with the publication of an advance notice of proposed rulemaking (ANPR) in the *Federal Register*.[7] On February 3, 2022, the Commission published in the Federal Register (87 Fed. Reg. 6246) the NPR concerning the risk of injuries and deaths associated with CSU tip overs. The intent of this rulemaking is to prevent an unreasonable risk of deaths and injuries resulting from such tip overs.

CSU tip overs often result when young children attempt to climb on the CSU; the weight and interaction of the child, combined with the weight of any open drawers and their contents, cause the CSU to tip forward and fall on the child. Children can be killed or injured from the impact of

[6] These 5 CSU representative models, discussed in detail in Tab D of the NPR Briefing Package, were actual CSU models on the market that had been involved in incidents. Staff assesses these models to be representative of the industry at large.
[7] Federal Register, Vol. 82, No. 229, November 30, 2017 (56752-56759).

the CSU falling on them, or from being trapped beneath the CSU, which can potentially restrict their ability to breathe. CSU tip-over fatalities and injuries include incidents with and without televisions.

Pursuant to section 9(f)(2) of the Consumer Product Safety Act, publication of a final rule requires a final regulatory analysis of the rule containing the following:

a) A description of the potential benefits and costs of the rule, including benefits and costs that cannot be quantified in monetary terms, along with an assessment of who is likely to receive the benefits and bear the costs.
b) A description of any alternatives to the final rule under consideration by CPSC, together with a summary description of their potential benefits and costs, and a brief explanation of why they were not chosen.
c) A summary of any significant issues raised by the comments submitted during the public comment period in response to the preliminary regulatory analysis, and a summary of CPSC's assessment of those issues.

This analysis includes a discussion of each of these elements. Sections 3 and 4 of this Tab discuss potential benefits and costs, respectively, of the draft proposed rule. Section 5 describes the relationship between benefits and costs of the draft proposed rule. Section 6 describes the alternatives considered along with the draft final rule. Tab K in the draft final rule briefing package summarizes the public comments that CPSC received on its NPR, including the preliminary regulatory analysis, and CPSC staff's assessment of those comments.

1.1. Draft Final Rule

The draft final rule would establish mandatory stability and other requirements that all CSUs would have to meet to be sold in the United States. The requirements of the draft standard (the draft regulatory text that would appear in the Code of Federal Regulations) are detailed in Tab G, and the justifications for each provision are detailed in Tab C, Tab D, and Tab E of this package; as well as in the NPR briefing package. In summary, the stability and other requirements of the draft standard involve testing the CSU in conditions that are intended to mimic the effect of children pulling out the filled drawers and climbing or pulling on the unit. The testing also includes conditions to mimic the impact to stability of the CSU being installed on carpeting, rather than a hard surface. For CSUs with interlock systems (devices that restrict simultaneous opening of drawers), the draft standard requires assessment of the integrity of that system by applying a 30-pound force to the locked drawers to ensure they do not open or damage the interlock.

In addition to the stability performance requirements, the draft final rule includes specific requirements for placement, content, symbols, and format of a permanent warning label or marking. The draft final rule also requires that each CSU have a permanent identification label with basic information about the name and address of the manufacturer, the date of manufacture, and a statement of compliance with this rule. CPSC staff of the Division of Human

Factors in the Directorate for Engineering Sciences (ESHF) provides details about the recommended label in Tab C. Manufacturers would also be required to provide consumers, at the time of purchase, information about the tip rating of each CSU. This would allow consumers to compare the stability ratings of different CSUs. The stability information would be provided in a hang tag or online for manufacturers who sell their products online. A detailed discussion of the hang tag is provided in Tab E.

In accordance with section 14 of the CPSA, manufacturers, importers, and private labelers would also be required to certify that their CSUs comply with the applicable standard. This draft final rule also includes a stockpiling limit which should allow firms to meet any foreseeable increase in the demand for CSUs, without allowing large quantities of CSUs to be stockpiled.

The costs of printing labels and hangtags are addressed as part of the Paperwork Reduction Act (PRA) burden estimate and are minimal (10 cents for the materials for the hangtags, less than a minute of labor cost to fasten the hangtag to unit), because the text and graphics for the labels and tags are provided for in the rule. The costs associated with stockpiling limits and the timing for the implementation of the rule are short-term costs that are difficult to assess. The argument for an earlier effective date (and lower stockpiling limit) for the draft final rule is the more immediate generation of benefits (i.e., avoided injuries and deaths) to society. However, reducing the stockpiling limits and shortening the timing for implementation considerably may result in costly market impacts and distorted supply chains. Both cases are difficult to quantity and the differences are short-lived. Hence, staff did not monetize these costs and benefits, and only discussed them qualitatively.

1.2. Effective Date

In the NPR, the Commission proposed to set the effective date at 30 days from publication to ensure the safety benefits of the rule begin almost immediately. During the comment period, many commenters representing manufacturers and retailers stated that the effective date should be much longer than 30 days due to long lead times for redesigning, testing, manufacturing, and delivering compliant CSUs to consumers. They asserted that changes to a large number of CSU models impacted by the requirements of the rule, along with a heavy industry reliance on ocean freight shippers facing significant constraints due to shortages, contribute to cumulative lead times that range from 3 months to a year or more to bring new models to the U.S. market. This includes time to redesign and test the CSU, and to order and receive component parts needed to manufacture it, as well manufacturing and shipping time for the CSU itself. Further, the record reflects that manufacturers commonly have substantial backlogs of orders, such that a 30-day effective date could make it impossible for retailers to fulfill orders that were placed prior to CPSC's adoption of the final rule.

The Small Business Administration's Office of Advocacy recommended extending the effective date beyond 30 days, to address supply chain issues and availability of CSUs at retail. Staff found these concerns to be credible because of the specific examples provided by commenters and because these comments comport to what staff has determined about the industry's supply

chain, which impacts both domestic manufacturing and imports, as stated in the staff briefing package on the NPR.

Staff accordingly assesses that the 30-day effective date proposed in the NPR has the potential to be very disruptive for producers and consumers, including causing shortages for U.S. consumers after cancellation of orders for CSUs that were placed by consumers and retailers prior to the Commission's publication of the final rule. Further, postponing the effective date by several months would reduce the benefits of the rule by only a very small amount as most noncompliant CSUs will take years to cycle out of use. Therefore, staff recommends that the effective date for the final rule be 180 days (the upper limit of the range stated in CPSA section 9(g)(1)) and apply only to the date of manufacture as specified in section 9(g)(1), instead of the date of manufacture or import as specified in the NPR.

2. Market Information

2.1. Retail Prices

Retail prices of CSUs vary substantially. The least-expensive units retail for less than $100, while some more expensive units may retail for several thousand dollars. The less expensive units may be in use for only a few years, while the most expensive units may remain in use for decades, and possibly passed on from one generation to the next.

CPSC staff used sales information provided by large furniture associations during the NPR comment period to estimate an average price per CSU of $338.50 in 2021 dollars, for this analysis.[8]

2.2. Annual Revenue and the Number of CSUs and CSU Models Sold

CPSC staff used multiple sources of information to estimate the annual revenues from the sale of CSUs within the scope of the draft final rule.[9] The Census Bureau produces estimates of

[8] Staff increased the average price per CSU from the value used in the NPR to reflect information provided by large furniture associations during the comment period. It is worth noting that the average price of furniture has shown a significant declining trend in the last two decades. The Bureau of Economic Analysis price index of personal consumption expenditure in furniture shows a decrease in price of 24.4 percent since 2000, while the CPI increased by about 60% in the same period.
[9] The use of multiple sources responds to the need of developing a more accurate representation of industry revenue. More authoritative sources such as the Census Bureau / Bureau of Economic Analysis (BEA) produce estimates of revenue by industry classification (NAICS codes), but not by consumer product. Private sources, such as Statista, have estimates of revenue by consumer products; however, these estimates may not be disaggregated at the level required for the analysis. Combining other sources of more disaggregated data with a more authoritative source is expected to generally lead to more accurate revenue estimates.

retail sales by industry classification.[10] These estimates are not directly connected with specific consumer products but serve as a good reference to develop more stable estimates of furniture sales. CPSC staff estimated that the furniture revenue estimates developed by Statista[11] were on average 2.61 times the value of retail sales of furniture stores produced by the Census and used this relation to develop an annual revenue estimate for the furniture industry, which approximates to $204.22 billion in 2021. Statista estimates indicate that, on average, bedroom furniture represents 18.62 percent of total furniture sales in the United States, which in 2021 equates to $38.03 billion. Of this total, sales of dressers and chests of drawers, closets, and nightstands represent 25.6 percent on average, or $9.74 billion. Nightstands represent 21.3 percent of this amount, or $2.08 billion. However, staff estimated that only 5 percent ($103.9 million) of oversized nightstands used as CSUs are within the scope of the rule. CPSC staff subtracted the out-of-scope nightstands to find the total retail value of relevant CSUs is $7.76 billion. Staff assumed that about 10 percent of CSUs that generated such revenue are out of the scope of the rule because of their height or their weight when filled, which produces a final estimate of $6.99 billion retail sales in 2021 of CSUs within the scope of the draft final rule.[12]

CPSC staff estimated that there were 20.64 million units sold in 2021 by dividing the $6.99 billion in sales revenue by the average price of $338.50.[13] A large majority of these CSUs were likely imported, mainly from Asia.

CPSC staff also developed an estimate of the number of models sold each year. To develop this estimate, staff used the assumption that, on average, 10,000 individual CSUs of each CSU model are sold.[14] CPSC staff divided the number of CSUs sold in each year by 10,000 units of

[10] In the case of furniture, relevant industry classifications include NAICS codes 442 (Furniture and home furnishings stores), 4421 (Furniture stores), and 4422 (Home furnishings stores), among others. However, the connection of the revenue reported by these industries to the revenue from the consumer products they sell is not necessarily straightforward. For instance, NAICS code 442 only includes new retail furniture and home furnishings stores operated from fixed point-of-sale locations; establishments in this subsector usually operate from showrooms and have substantial areas for the presentation of their products; many offer interior decorating services in addition to the sale of products.
[11] Statista is a leading provider of market and consumer data that covers more than 170 industries, using thousands of different data sources. Statista produces, among other data, detailed estimates regarding the global furniture industry, broken out both by geography and type of furniture.
[12] This estimate is higher than the 2018 estimate used in NPR of $5.15 billion. Sales data were updated to 2021 in order to reassessed the number of CSUs in light of updated market prices provided during the NPR comment period. See Section 3 and Addendum A of comment submitted on February 3, 2022, Docket No. CPSC-2017-0044-0111-A
[13] With a Census Bureau estimate of 129.93 million households in 2021, this would indicate that roughly one out of six households purchase a CSU in a given year, or that the average household purchases a CSU every six years. With the average useful life of a CSU at 15 years, a single-person household that wants to hold one CSU on average, would be expected to purchase a CSU every 15 years. The Census Bureau estimates that the average number of persons per household size in 2021 is 2.51, which also seems to indicate the average household would purchase a CSU on average every six years (15/2.5=6).
[14] Isolated information provided by furniture associations and manufacturers indicated the production of larger lots of CSUs, roughly in the tens or hundreds of thousands of CSUs per model; hence staff

estimated sales per model, to generate a rough approximation of the number of models sold each year.[15] CPSC staff estimated the number of new CSU models in 2021 was 2,064.

2.3. CSU and CSU Models in Use

CPSC staff estimated the number of CSU units in use using estimates of historic sales of CSUs in combination with a statistical distribution of CSU failure rates. Failure rates help determine when CSUs are discarded by consumers, which is centered around the average lifecycle of 15 years. The estimate of CSUs in use is constructed iteratively. For instance, considering that the average product life of a CSU is 15 years, if a million CSUs were purchased in 2005, a portion of them will still be in use in 2022, and a smaller portion might continue to be used in 2030. The statistical distribution generates the proportion of CSUs that are expected to be in use several years after being purchased as new.[16] Staff developed estimates of CSUs sales since 1998[17], and proceeded with the iterative calculation of the number of CSUs in use every year. Using this approach, CPSC staff estimated there were 229.94 million in-scope CSUs in use in 2021.

CPSC staff estimated the number of CSU models in use in a similar fashion.[18] Staff developed estimates of CSU model sales since 1998 and proceeded with the iterative calculation to estimate that the number of CSU models in use in 2021 is 6,365.

3. Final Regulatory Analysis: Benefits Assessment

This section presents the benefits assessment of the draft final rule. The benefits assessment is approached from a societal perspective, considering all the significant costs and health

---

believes this may be an estimate that produces a larger number of models, and might produce costs to manufacturers above of what would be expected if the information delivered with those comments was used instead. However, there is significant uncertainty about this value, in either direction.

[15] This is a rough approximation, not only because the number of CSUs sold per model is an estimate with a large uncertainty; but also, because the average life of a CSU model, which is postulated as three years on average, is not directly used in the calculation. This method tends to produce a higher cost estimate of redesign and testing costs, so it was considered preferable to err on the side of not exaggerating the net benefits of the draft rule. Also, as shown later, CSU model related costs are relatively small, so the staff assesses this approximation as sufficient.

[16] CPSC staff use a Gamma distribution with shape and scale parameters of 15 and 1. Based on this distribution, roughly one out of two CSUs stops being used by its average lifespan of 15 years. About two percent of CSUs continued to be used after 24 years.

[17] For the initial year, CPSC staff elaborated a number of CSUs in use at that point through an alternative calculation that uses the population in the U.S. by household size and assumes households have half a CSU less than the number of persons in the household. It's worth noting that these two estimation methods produce estimates that are within a few percentage points of each other.

[18] CPSC staff use a Gamma distribution with shape and scale parameters of 3 and 1.

outcomes (Gold et al., 1996; Haddix, Teutsch, and Corso, 2003; Neumann et al, 2016). CPSC staff measured the benefits of the rule as the expected reduction in societal costs of deaths and injuries from implementation of the draft final rule.

3.1. Deaths and Injuries Related to Tip Overs of CSUs

CPSC staff collected CSU tip-over incident data from two main sources:

- The Consumer Product Safety Risk Management System (CPSRMS): This database includes anecdotal data on reported fatalities and injuries. Staff collected reported fatalities from January 1, 2000, through April 30, 2022, and reported injuries from January 1, 2005, through April 30, 2022. Data collection from CPSRMS is ongoing and reporting is considered incomplete for the latest three years.
- The National Electronic Injury Surveillance System (NEISS): This database includes emergency-department (ED) treated injuries collected from a statistically designed sample of hospitals across the nation. Staff collected ED-treated injuries from January 1, 2006, through December 31, 2021.

CPSC staff grouped the tip-over incidents of these two databases into four subsets based on two criteria: incidents involving children under 18 years of age were separated from those involving adults, and incidents involving CSUs only were separated from incidents also involving television sets. The draft final rule is expected to address more effectively CSU-only tip-over incidents involving children and have a reduced impact on incidents involving CSU-only tip-overs on adults. The incidents involving CSUs and television sets are not included in the estimation of benefits in this regulatory analysis.[19]

[19] Historically, most incidents involving TVs are related to older cathode ray tube (CRT) televisions, which have fallen out of use, and are rarely available in homes across the U.S. CRT televisions are usually substantially heavier than the newer flat-panel televisions. CRT televisions with 19-inch to 32-inch screens may weigh between about 40 pounds to 163 pounds, while similarly sized flat-screen televisions typically weigh less than 30 pounds. An analysis by Lee and Volanth (2015) of the dynamics of tip-over incidents involving televisions found that in a tip-over incident, a CRT television would predictably begin to slide forward, and in the case of a child positioned in the front of a CSU, the television could easily "strike the child, knocking the child to the ground, with the television and furniture possibly landing on top of the child." The analysis found that the fall pattern of flat-screen televisions was more random. The report notes that a front-heavy CRT television placed on the top of a dresser could shift the center of gravity of the CSU forward, making it less stable. This is especially a concern if a large CRT television is placed on a surface that is too small for the television (Lee and Volanth, 2015). Based on this analysis, one could conclude that as the number of CRT televisions in use decreases, the number of tip-over incidents and their severity will decrease. In 2010, about 55 percent of all televisions in use were CRT televisions. By 2020, that percentage was expected to be about 9 percent; and it is expected to decline to less than 1 percent by 2030 (Smith, 2010). Thus, incidents involving televisions are not considered in this regulatory analysis.

In addition to these two databases, staff used estimates generated by the CPSC's Injury Cost Model (ICM).[20] The ICM uses data from NEISS's representative hospitals to generate national estimates of the total number of ED-treated injuries and hospital admissions. Beyond injuries initially treated in EDs and through hospital admissions, many product-related injuries are treated in other medical settings, such as physicians' offices, clinics, and ambulatory surgery centers. Some injuries also result in direct hospital admission, bypassing the hospital ED entirely. The ICM also estimates the number of injuries treated outside of hospital EDs using empirical relations between the characteristics of injuries (diagnosis and body part) and victims (age and sex) initially treated in hospital EDs and the characteristics of those initially treated in other settings.[21]

3.1.1. Child Deaths and Injuries

To estimate societal costs associated with reduced fatalities, CPSC staff calculated an annual rate using historical data over a discrete timeframe. CPSC staff chose a 15-year timeframe to reflect the average product life of a CSU and excluded data from 2022 because its incident collection is not complete. Given these considerations, CPSC staff only considered fatalities reported from 2007 to 2021 through CPSRMS.[22] CPSC staff identified at least 60 deaths related to CSU tip-over incidents without televisions and involving children. This results in an average of 4 deaths per year.[23] Staff notes that death reports tend to lag for up to 3 years, so data from 2020 and 2021 are likely undercounts.

[20] For detailed documentation on the ICM, please see CPSC's website at https://www.cpsc.gov/content/The-Consumer-Product-Safety-Commissions-Revised-Injury-Cost-Model-2018

[21] The ICM estimate of injuries treated outside of hospitals or hospital EDs (e.g., in doctors' offices, clinics) is based on data from the Department of Health and Human Services' (HHS) Medical Expenditure Panel Survey (MEPS). The MEPS is a nationally representative survey of the civilian, non-institutionalized population that quantifies individuals' use of health services and corresponding medical expenditures. To project the number of direct hospital admissions that bypass hospital EDs, the ICM uses data from the Nationwide Inpatient Sample of the Healthcare Cost and Utilization Project (HCUP-NIS), also from the Department of Health and Human Services. HCUP is a family of healthcare databases and related software tools and products developed through a federal-state-industry partnership and sponsored by the Agency for Healthcare Research and Quality (AHRQ), part of HHS. The HCUP-NIS provides information annually on approximately 3 million to 4 million in-patient stays from about 1,000 hospitals. A detailed discussion of the methodology used by the ICM to estimate medically treated injuries outside of hospital EDs is given in Lawrence et al. (2018)

[22] CPRMS data includes the in-scope NEISS incidents; four deaths involving only CSUs (no televisions involved). The number of deaths also excludes all incidents that occurred after the end of 2021.

[23] Including fatal incidents involving televisions, CPSC staff identified 144 children deaths related to CSU tip-over incidents that occurred from 2007 through 2021; this is equivalent to an average of 9.6 deaths per year over this 15-year period. Of the 84 deaths involving television sets that had been placed on top of the CSU, a large majority involved older, heavier CRT televisions.

For the estimation of benefits from reduced injuries, CPSC staff relied on the national estimates produced by the ICM.[24] The ICM estimated that there were 44,652 injuries to children under the age of 18 years involving CSU tip-overs from 2007 through 2021, or an average of 2,977 per year. These injuries were treated in emergency departments or through hospital admissions.[25] The ICM also projected an additional 58,351 CSU tip-over injuries treated in other settings during the same 15-year period, or an average of 3,890 per year.[26] Combining the estimate of injuries treated in hospital emergency departments with the estimate of medically attended injuries treated in other settings sums to 103,003 injuries from 2007 through 2021, or an average of 6,867 per year.

As discussed in Tab A, there was a statistically significant linear decline in injuries to children involving CSU-only tip-overs from 2012 through 2021. This trend is different from what was reported in the NPR: there was no statistically significant linear decline at the 95 percent confidence level in injuries to children involving CSU-only tip overs for NEISS data from 2010 through 2019. Staff cautions that the estimated number of injuries treated in emergency departments were likely reduced by the COVID-19 pandemic for the years 2020 and 2021.[27]

3.1.2. Adult Deaths and Injuries

During the period from 2007 through 2021, there were 22 adult fatalities involving CSU tip-overs, an average of 1.5 a year.[28] The draft final rule's stability requirements would likely have prevented a sizeable share of the CSU tip-overs that caused these deaths.

The ICM produced a national estimate of 23,695 adults treated in emergency departments and through hospital admissions because of injuries received when CSUs tipped over. The ICM also projected that there were 50,119 adult injuries treated in other medical settings, for a total of 73,814 medically attended injuries to adults involving CSU tip overs, or an average of 4,921 a year.[29] Some of the scenarios involved in the injuries to adults included a CSU falling when the victim attempted to open drawers or when the victim held onto the CSU for support.

---

[24] Incidents that did not result in an injury are not considered. Also, nonfatal injuries from CPSRMS are not directly included; however, the NEISS national estimates of nonfatal injuries may indirectly account for them. Estimates of incidents related to 2022 are also excluded.
[25] In addition to these incidents, there were about 16,370 ED-treated or hospital admission injuries, an average of 1,091 per year, that involved televisions that had been placed on top of the CSUs.
[26] The ICM estimates there were also 17,4442 CSU tip-over injuries that involved a television set and were treated in settings other than ED and hospital admissions during the same 15-year period, or an average of 1,163 per year
[27] https://www.cpsc.gov/content/Effect-of-Novel-Coronavirus-Pandemic-on-2020-NEISS-Estimates-March%E2%80%93December-2020
[28] One additional adult fatality involved a television, for a total of 23 adult fatalities.
[29] The ICM produced a national estimate of 825 ED-treated or hospital admission injuries involving adults and furniture tip-over with a television set that had been placed on top of the CSU. The ICM also projected a total of 1,384 injuries treated in setting other than the ED or the hospital, contributing to a total of 2,209 medically-treated injuries involving television sets, or an annual average of 147 injuries.

3.2. Societal Costs of Deaths and Injuries

CPSC staff used the Environmental Protection Agency's value of statistical life (VSL) of $10.5 million[30] to estimate the societal costs of CSU-related deaths. Using this VSL, the societal cost of an annual average of 4 child fatalities is $42 million.[31] The societal cost of the adult fatalities is $15.4 million a year based on an average of 1.5 adult fatalities per year.

CPSC staff quantified societal costs of the CSU injuries using estimates produced by the ICM.[32] The ICM[33] uses its full integration with the NEISS database to develop estimates of the societal costs of reported injuries, as well as the societal cost of injuries medically treated outside of hospital emergency departments. The aggregated societal cost components provided by the

[30] The VSL is an estimate used in benefit-cost analysis to place a value on reductions in the likelihood of premature deaths. The VSL does not place a value on individual lives, but rather, it represents an extrapolated estimate, based on the rate at which individuals trade money for small changes in mortality risk (OMB, 2003). Estimates of the VSL in the economics literature are based on a "willingness to pay" methodology, which attempts to measure how much individuals are willing to pay for a small reduction in their own mortality risks, or how much additional compensation they would require to accept slightly higher mortality risks. For this analysis, staff applied estimates of the VSL developed by the U.S. Environmental Protection Agency (EPA) (2008). Updated to 2021 dollars, the EPA estimate of the VSL is close to $10.5 million.

[31] If staff considered all child fatalities instead; that is, including also tip-over incidents involving television sets, the societal costs of child fatalities would be $100.8 million annually (9.6 deaths per year x $10.5 million).

[32] Information on the societal costs associated with nonfatal CSU injuries to children under the age of 18 years are presented in Appendix A, Table A-1. The societal costs of the nonfatal injuries to adults are presented in Table A-2. These estimates are the costs for the 15-year period from 2007 through 2021, updated to 2021 dollars.

[33] The ICM uses the NEISS estimates of emergency department-treated injuries and imputes estimates of injuries treated in other medical settings using the empirical relationships between injuries treated in emergency departments and these other settings. The societal cost estimates include the cost of medical treatment, lost worktime, and intangible pain and suffering costs; the intangible pain and suffering costs account for about three quarters of this total. See Lawrence et al., 2018 for additional information.

ICM include medical costs,[34] work losses,[35] and the intangible costs[36] associated with pain and suffering.

The estimated injury costs for children are $16,085 per injury treated in a physician's office, $36,206 for injuries treated and released from a hospital ED, and $465,992 for hospital admitted injuries (average costs of injuries admitted to the hospital after an assessment at the ED, and those admitted to the hospital bypassing the ED). The overall average cost of injuries to adults is slightly lower than the average cost of injuries to children: $30,859 vs. $35,003.

Table 1 presents the average number of fatal and nonfatal incidents per year.

[34] Medical costs include three categories of expenditures: (1) medical and hospital costs associated with treating the injury victim during the initial recovery period and in the long run, including the costs associated with corrective surgery, the treatment of chronic injuries, and rehabilitation services; (2) ancillary costs, such as costs for prescriptions, medical equipment, and ambulance transport; and (3) costs of health insurance claims processing. Cost estimates for these expenditure categories were derived from a number of national and state databases, including the Medical Expenditure Panel Survey (MEPS), the Nationwide Inpatient Sample of the Healthcare Cost and Utilization Project (HCUP-NIS), the Nationwide Emergency Department Sample (NEDS), the National Nursing Home Survey (NNHS), MarketScan® claims data, and a variety of other federal, state, and private databases.

[35] Work loss estimates are intended to include: (1) the forgone earnings of the victim, including lost wage work and household work; (2) the forgone earnings of parents and visitors, including lost wage work and household work; (3) imputed long-term work losses of the victim that would be associated with permanent impairment; and (4) employer productivity losses, such as the costs incurred when employers spend time juggling schedules or training replacement workers. Estimates are based on information from the MEPS, the Detailed Claim Information (a workers' compensation database) maintained by the National Council on Compensation Insurance, the National Health Interview Survey, the U.S. Bureau of Labor Statistics, and other sources.

[36] The intangible, or non-economic, costs of injury reflect the physical and emotional trauma of injury, as well as the mental anguish of victims and caregivers. Intangible costs are difficult to quantify because they do not represent products or resources traded in the marketplace. Nevertheless, they typically represent the largest component of injury cost and need to be accounted for in any benefit-cost analysis involving health outcomes (Rice et al., 1989; Haddix, Teutsch, and Corso, 2003; Cohen and Miller, 2003; Neumann et al, 2016). The ICM develops a monetary estimate of these intangible costs from jury awards for pain and suffering. Although these awards can vary widely on a case-by-case basis, studies have shown them to be systematically related to a number of factors, including economic losses, the type and severity of injury, and the age of the victim (Viscusi, 1988; Rodgers, 1993; Cohen and Miller, 2003). The ICM estimates were derived from regression analysis of jury awards in nonfatal product liability cases involving consumer products compiled by Jury Verdicts Research, Inc.

Table 1. Average Number of CSU Tip-over Incidents per Year

Average Number of Incidents per Year	Under 18 - CSU Only	Over 18 - CSU Only
Deaths	**4.0**	**1.5**
Injuries	**6,867**	**4,921**
Doctor / Clinic	3,890	3,341
Emergency Department	2,814	1,435
Hospital Admission	163	145

Table 2 summarizes the estimates of the average societal cost of deaths and injuries per type of incident treated in different medical settings, for both children and adults.

Table 2. Average Societal Cost per Type of CSU Tip-over Incident

Average Cost per Type of Incident	Under 18 - CSU Only	Over 18 - CSU Only
Deaths (VSL) [37]	**$10,500,000**	**$10,500,000**
Injuries	**$35,003**	**$30,859**
Doctor / Clinic	$16,085	$17,636
Emergency Department	$36,206	$26,722
Hospital Admission	$465,992	$376,477

Table 3 presents the aggregated societal cost associated with deaths and injuries for children and adults because of CSU tip-over incidents per year. The total cost of deaths and injuries to both children and adults reaches $449.61 million per year.

Table 3. Societal Cost per Type of Tip-over Incident

Average Cost per Year in $M	Under 18 - CSU Only	Over 18 - CSU Only	All ages - CSU only
Deaths	**$42.00**	**$15.40**	**$57.40**
Injuries	**$240.36**	**$151.85**	**$392.21**
Doctor / Clinic	$62.57	$58.93	121.50
Emergency Department	$101.88	$38.34	140.22
Hospital Admission	$75.91	$54.59	130.50
Total	**$282.36**	**$167.25**	**$449.61**

[37] Regulatory analysis uses standard VSL described in footnote 30. Section 5.2.1 of this Tab describes the findings of a sensitivity analysis that re-runs the cost-benefit analysis using estimated child VSLs of $21 million and $30.5 million.

3.3. Potential Benefits of the Draft Final Rule

CPSC staff of the Division of Human Factors in the Directorate for Engineering Sciences (ESHF) conducted a detailed analysis of CSU tip-over incidents. ESHF observed interactions and hazard patterns, as well as the physical and behavioral characteristics of the at-risk populations, to provide recommendations towards the requirements of this draft final rule. ESHF staff also assessed the efficacy of the requirements in the draft final rule in addressing the hazards of CSU tip-over incidents.[38]

One significant aspect of ESHF staff's analysis is an assessment of children interactions with the CSUs (i.e.: climbing, hanging, opening drawers, etc.) and the weight of the children involved. CPSC staff developed the performance requirements of the draft final rule to prevent tip-overs incidents involving children three years old and younger, regardless of the type of interaction. Across the different known interactions of children of different ages and weights with CSUs, ESHF staff estimated that 83.9 percent of nonfatal incidents are addressable with the draft final rule.[39]

There is less information available regarding the tip-over incidents involving adults.[40] Although nearly all adults weigh more than 51.2 pounds, the type of interactions with CSUs are not the same as those observed in children.[41] CPSC staff were not able to estimate the exact portion of incidents involving adults that would be prevented. Instead, staff conservatively assumed that the draft final rule would prevent adult tip-over incidents at half the efficacy rate of child tip-over incidents, or 42 percent.

Given these expected efficacy rates in reducing the number of fatal and nonfatal incidents, when all CSUs in use comply with the performance standards,[42] the annual societal benefits from the draft final rule would be $307.17 million. This total is comprised of $41.71 million in reduced deaths and $265.46 million in reduced injuries, as shown in Table 4. CPSC estimated that the draft final rule would prevent an average of 7,828 injuries and 4 deaths annually.

---

[38] See TAB C for additional information regarding this analysis.
[39] These figures are similar to the addressability estimates calculated for the NPR. Staff calculated the ratio of nonfatal addressable incidents by the total number of nonfatal incidents for each age, and took the average of those percentages to calculate the aggregate nonfatal addressability. See TAB C for full discussion of what incidents staff considered addressable. Staff assessed that the ratio of nonfatal addressable incidents can be considered a reasonable estimate of the ratio of fatal addressable incidents; and used it as such in the estimation of benefits.
[40] Incidents tend to involve older adults; all the fatalities in record involved victims over the age of 42 years, and more than half of them involved seniors over 80 years old. Many of the available narratives of incidents occurring to older adults suggest that victims were losing their balance and grabbed the CSU in an effort to balance themselves.
[41] Many of the nonfatal cases involved adults operating the CSU; for instance, opening drawers, getting items in and out of drawers, or leaning on the CSU. In many cases, these scenarios are expected to be less severe than those of children climbing with all drawers filled and opened.
[42] The annual benefits will not reach this level until most or all CSUs in use meet the requirements of the draft final rule, which will likely occur a number of years after the implementation of the draft final rule.

Table 4. Summary of Expected Annual Benefits

Description	Annual Number of CSU Incidents (no TV)	Annual Societal Costs ($M)	Expected Efficacy of Standard	Expected Reduction in Incidents	Expected Annual Benefit ($M)
Fatalities	**5.5**	**$57.40**		**4.0**	**$41.71**
Children	4.0	$42.00	83.9%	3.4	$35.25
Adults	1.5	$15.40	42.0%	0.6	$6.46
Injuries	**11,788**	**$392.21**		**7,828**	**$265.46**
Children	6,867	$240.36	83.9%	5,763	$201.73
Adults	4,921	$151.85	42.0%	2,065	$63.73
Total	**11,793**	**$449.61**		**7,832**	**$307.17**

CPSC staff also present benefits on a per-unit basis. CPSC staff estimated past in-scope CSU sales, then used to those estimates to develop an estimate of the number of CSU in use in 2021. Based on available furniture sale information, CPSC staff estimated that 20.64 million in-scope CSUs were sold in 2021, which in combination with estimates of prior year sales led to an estimate of 229.94 million in-scope CSUs in use.[43] Dividing the estimated $307.17 million in annual benefits by the 229.94 million CSU in use produces an annual benefits per CSU of about $1.34. Over the 15-year useful life of a CSU,[44] this translates into $15.95 of total benefits per CSU at a discount rate of 3 percent,[45] or $20.04 without discounting. Table 5 summarizes these estimates.

[43] The number of CSU in use was estimated using historical CSU sales and a statistical distribution of CSU failure rates (the rate at which CSU fall out of consumers use over their lifecycle) roughly centered at the average useful life of 15 years. The idea is that the actual useful life of a particular CSUs may be shorter, equal, or longer than the average useful life; the statistical distribution estimates the proportion of CSUs with a useful life equal to each of a number of possible years of useful life. Staff then generated an iterative estimate of the total CSU in use in each year by aggregating the estimated number of CSUs still in used in that year out of all the CSUs purchased in prior years.
[44] 15-year of useful life is intended to represent the life of the average CSU. This average includes less expensive ready-to-assemble (RTA) CSUs that might have expected useful lives that are less than 15 years, and more expensive factory-assembled CSUs that may have expected lives greater than 15 years.
[45] The use of discount rates helps bring the annual benefits of the CSU over its lifecycle to the present, or a single point in time, to facilitate the comparison of cost and benefits. This net present value discounting accounts for the fact that most of the costs of the rule will occur much sooner than the estimated benefits. It also allows the summation of amounts at different points in time by discounting them at a rate that makes them comparable. A 3 percent discount rate is commonly used in regulatory analysis, 7 percent is used as an alternative; these rates are specified in OMB Circular A4.

Table 5. Benefits per Unit by Discount Rate

Discount Rate	Annual Benefit per CSU	Average Useful Life in Years	Benefits over the CSU Lifecycle
0%	$1.34	15	$20.04
3%	$1.34	15	$15.95
7%	$1.34	15	$12.17

4. Final Regulatory Analysis: Cost Analysis

This section discusses the costs the draft final rule would impose. These are the added costs associated with redesigning and modifying CSUs to meet the requirements of the standards, testing CSUs for conformance, as well as the cost of the labor and materials required to produce compliant CSUs.

4.1. Costs of CSU Model Redesign and Testing to Demonstrate Compliance with the Standard

Staff estimates that current conformance with the performance requirements in the draft final rule is very low. To comply with the draft final rule, most furniture manufacturers, during the first years of implementation, must produce updated designs that achieve the performance requirements of the draft final rule, and conduct formal tests[46] to verify conformance. Manufacturers will also need to add stability-rating hang tags on each CSU,[47] as well as provide the required certificates of compliance, information label, and warning labels.[48]

Industry would incur the cost of redesigning CSUs during the first year of implementation of the rule as a one-time cost. Future models would use the redesigned features of the models created during the first years of implementation of the rule. Under the assumption that, on average, 10,000 CSUs are produced of every CSU model[49], CPSC staff estimates that there will

[46] Most manufacturers are likely already conducting stability testing similar to that which would be required by the draft final rule, and might only need to update or replace their current test methods with those required by the draft final rule. The rule requires new tests; such as, weighting drawers, pull tests on interlock mechanisms, and testing the stability of the CSU on a 1.5-degree angle, which might imply additional cost; however, the cost increases associated with testing are likely not large.
[47] The stability ratings would be obtained as a result of testing each new CSU model.
[48] The cost of providing the general certificates of conformity is expected to be low on a per-unit basis. In the case of CSUs considered children's products, which are a very small segment of the CSU market, the cost of certification testing could be somewhat higher because an accredited third-party testing laboratory would be required to conduct the certification testing.
[49] This assumption is intended to err on the side of understating net benefits of the draft rule (generate a higher cost per CSU model), and expected to be in the low end of the range based on comments

be a total of 6,334 existing CSU models[50] that need to be redesigned in the first year of the rule (2023).

Information provided by a large furniture manufacturer / retailer association indicated that it would take an average of 5 months to redesign one thousand different CSU models. CPSC staff assumed that a team of 20 full-time professionals, earning an average hourly compensation of $66.37[51], would work a total of 17,333 hours[52] to produce the updated designs of one thousand CSU models. This results in a cost per model of $1,150.41 for labor ($66.37 per hour × 17,333 hours ÷ 1,000 models), an amount that likely includes a certain level of unit cost improvement associated with scale and learning, given the number of models. Therefore, manufacturers will redesign all existing models at a total cost of $7.29 million ($1,150.41 per model × 6,334 existing CSU models).

To calculate cost of redesign cost per CSU, staff divided the total cost of redesign, $7.29 million, by the number of CSUs expected to be produced during that first year (2023), estimated at 17.68 million.[53] [54] This equates to a redesign cost of $0.41 per CSU. Table 6 summarizes the cost estimate associated with redesign activities:

Table 6. Cost of CSU Model Redesign

Cost of Redesign	2024
Number of Existing Models	6,334
Millions of CSUs	17.68
Redesign Cost per Model	$1,150.41
Total Redesign Cost in $M	$7.29
Redesign Cost per CSU	$0.41

received from large furniture associations about the number of CSUs sold for specific models produced by particular manufacturers that submitted sales and lot data to the association.

[50] CPSC staff estimated the number of CSU models per year using historic approximations of the number of CSU models sold each year in the past, along with a statistical distribution of CSU model failure rates (the rate at which CSU models are discontinued by manufacturers) centered at an average of 3 years.

[51] Total hourly compensation for private service-providing industry workers in professional and related occupations as of the fourth quarter of 2021 from the Bureau of Labor Statistics compensation statistics.

[52] This is the result of 40 hours a week per full-employee times 20 employees, times 5 months of 4.33 weeks each (52 weeks a year / 12 months).

[53] Forecasted sales for 2023 lower than 2021 sales due to staff considering sales for 2021 an aberration from the normal trend due to the recovery of the COVID-19 pandemic. Forecasted sales for 2023 follows pre-pandemic historical trends.

[54] Staff could have opted to estimate the redesign cost per CSU, considering all the CSUs impacted by the new design, including future year models, but opted to assume higher costs to avoid overstating net benefits.

Model testing would recur annually, as all new models will have to be tested to verify compliance with the standard. The cost of CSU model testing is estimated at $711.46[55] per model as of the end of 2021. Using the assumption of 10,000 CSUs per model, average cost per model translates into a cost per CSU of around $0.071. In the first year of rule implementation, there will likely be a larger number of models to be tested, which prompted CPSC staff to round the average cost per CSU to $0.10.[56] The initial and recurrent annual cost of testing are presented in Table 7.

Table 7. Initial and Recurrent Annual Cost of CSU Model Testing

Cost of Testing	2023	Annual
Number of Existing Models	6,334	1,768
Test Cost per Model	$711.46	$711.46
Total Cost of Redesign	$4,510,000	$1,260,000

In summary, CPSC staff estimated the cost of redesign and testing per CSU to be $0.51, as shown in Table 8.

Table 8. Per-Unit Cost of CSU Model Redesign and Testing

Average Number of CSUs per Model	10,000
Redesign and Testing Cost per CSU	$0.51
Redesign Cost per CSU	$0.41
Testing Cost per CSU	$0.10

4.2. Costs of Additional Labor and Materials to Increase CSU Stability

CPSC staff has identified several CSU modifications that could increase the stability of the CSU. These are (1) adding interlock mechanisms to limit the number of drawers, pull-out shelves, or doors that can be opened at one time; (2) reducing the maximum drawer extensions; (3) extending the feet or front edge of the CSU forward; (4) various devices and methods to raise the front of the unit; and (5) adding additional weight to the back of the CSU. Manufacturers can use combinations of more than one of these methods to increase the stability of a single CSU model, as well as alternative methods of increasing stability not analyzed by staff.

[55] A large furniture association provided an estimate of $700 per model testing. Staff assumed the estimate correspond to September 2021, and updated it to December 2021 using the Consumer Price Index for All Urban Consumers.
[56] Additional competition for resources needed to perform a large number of tests within a short timeframe may create price pressures. To use a conservative estimate, staff rounded the per-unit test cost estimate to the next tenth.

4.2.1. Interlock Mechanisms

The cost of an interlock mechanism includes the cost of the interlock itself; the cost of design, materials, and labor required to manufacture an interlock adapted to the CSU model; and the cost of installing the mechanism into the CSU.[57] Staff estimated the cost of each interlock at $2.48.[58] One interlock may be required for CSUs with a single-column of drawers to limit the number of open drawers to one at a time; additional interlocks will likely be needed for CSUs with additional columns of drawers.[59]

Additionally, CPSC staff assumed installing an interlock mechanism would require an average of 3 additional minutes of assembly labor,[60] which would amount to an installation cost per interlock of $0.45 for interlocks assembled to CSUs. CPSC staff used a labor wage rate of $8.96 per hour to calculate this cost. This wage is a weight average of factory workers' wage rates in proportion to where furniture manufacturing is conducted – mostly in Asia.[61] The total cost of implementing interlock mechanisms, including labor, per CSU is $2.93 for CSUs that

[57] There may be additional costs associated with warehousing the parts and the logistics involved in getting the parts to the factory floor, which are not explicitly considered in this analysis. In the case of RTAs, some of these costs could be borne by the consumer, including the value of the extra time that might be required of a consumer to assemble a CSU with a drawer interlock. This type of costs is, as mentioned earlier, not quantified in this analysis.
[58] This estimate is based on information provided during the NPR comment period by a large trade association of furniture manufacturers, importers, and suppliers. The cost of the interlocks per CSU, provided by the association, is in the range $2.4 to $4.96 per CSU. CPSC staff assumed these estimates relate to the most common CSUs in the market with one and two columns of drawers; these CSU would require one and two interlocks, respectively. Hence; the cost of one interlock was estimated by CPSC staff at $2.48, or half the higher value provided.
[59] All interlock mechanisms of which staff is aware are designed to control the opening of drawers in a single column. CSUs with two columns of drawers might require two interlock mechanisms to limit the number of drawers that could be opened at one time to one in each column, or two in total. A new interlock design may have to be developed, if manufacturers want to further limit the number of drawers that could be opened at one time in multi-column CSUs. The cost of these interlocks would likely be higher. In the absence of information related to the development of these type of interlock mechanisms; staff assumed -for the sole purpose of developing an estimate of the cost of the interlock mechanisms per CSU- additional interlocks would be needed (up to five for the most complex CSUs).
[60] Staff do not have direct estimates of the additional labor time that would be required to install an interlock mechanism into a CSU, but assumed it would take between 1 and 5 minutes, with an average of 3 minutes. This is likely an overestimation, since it does not consider improvements associated with large scales of production and productivity gains due to learning.
[61] Staff used a weighted average of applicable wages in countries that represented the top 10 sources of imported furniture to the U.S. in 2021 under Harmonized Tariff Schedule code 9403: Furniture and parts thereof, not elsewhere specified. This HTS code excludes chairs and office furniture. Weighted average reflects the top 10 sources of imported furniture, where China and Canada account for more than 92% of imports by volume. Where wage data was not available, staff used World Bank core CPI data for individual countries to adjust wages to 2021 levels. Commenters on the draft final rule stated that more than 90% of CSUs sold in the U.S. are imported, this more accurately reflects manufacturing costs than U.S. wage data.

require a single interlock and up to $14.64 for CSUs that require more complex CSU mechanisms with significant redesign costs.[62]

4.2.2. Extending the Feet or Front Edge of the CSU Forward

The cost of extending the feet or the front edge of the CSU forward[63] can be very low. In some cases, no additional parts would be required, and the only cost would be the time it takes for the manufacturer to make the change in manufacturing procedures; this would be the case where already-present feet or glides are simply shifted forward an inch or so. In these cases, the cost of shifting the front edge forward could be less than $1 per unit. In other cases, feet might need to be added or redesigned at costs of up to $5 per CSU unit.[64] After considering this range of cost, CPSC staff assumed the average cost of feet or front edge extensions is the range's midpoint of $3.[65]

4.2.3. Raising the Front of the CSU

The cost of tipping the unit back by raising its front or providing adjustable leveling feet[66] is estimated at $2.80 per CSU. CPSC staff estimated this cost based on information provided by one manufacturer – according to whom, the cost of devices to raise the front of the CSU could be as high as $5 per CSU; and, observed retail prices for leveling devices of 30 cents each, or

[62] As indicated earlier, staff believe this is in the high end of actual costs because of the conservative (high-end costs) assumptions used, and also because cost improvements due to scale and learning are not considered.

[63] This method of improving the stability of CSUs consists in moving the front edge of the CSU that contacts the floor forward, closer to the child, or even under the child. Some CSUs have feet or glides that might be set back an inch or so from the front edge of the CSU. These could simply be moved forward so that they are flush with the front edge. In other cases, the glides or feet could be modified to extend out from the front of the CSU. A solution, proposed by HinesLab, Inc., is to attach a base to the CSU, the front edge of which would extend a significant distance from the front edges of the closed drawers of the CSU, effectively moving the fulcrum under the child, or even behind the child. This solution is described on their website at: https://www.hineslab.com/mechanical-projects/kidsafe-dresser-baseboard/.

[64] Cost based on observed retail prices for furniture feet available on the Internet. These prices are likely much higher than the prices many manufacturers would be able to obtain for large scale volumes of production.

[65] This average cost is expected to account for the potential for higher costs for certain CSUs, such as adding a base to the unit similar to the prototype from HinesLab, or the additional costs of materials needed to form the base of the unit and attach it to it. The potential increased in the cost of packing and shipping is not included in this average though, since this potential cost increase is part of the cost of adding weight, discussed in section 4.2.4. This average cost does not account for the loss of consumer utility from the use of the product (e.g., less attractive designs), nor for the cost associated with potential increased tripping hazards.

[66] This method is used to stabilize the CSU by designing it with a raised front compared to the back of the CSU (i.e., tipped back slightly). Tipping the unit back would increase the force required to tip the CSU forward. This method is sometimes used on an ad hoc basis by consumers when they attempt to fix unstable CSUs by placing shims or other materials under the front feet of a CSU they believe is unstable.

$0.60 for a minimum of two devices needed to stabilize a CSU. Since the lower-cost devices may not meet the specifications of the draft final rule, staff assessment concluded that the average of the high and low estimates is a good representation of the cost to raise the front of a CSU.[67]

4.2.4. Adding Weight to the Back or Base of the CSU

The cost of adding weight to a unit to improve its stability[68] includes the cost of the additional materials, the cost of shipping heavier CSUs (usually from a foreign country), and the cost of additional packing redesign and materials for a subset of CSUs. Based on observed retail prices per pound of medium-density fiberboard costs, the average cost per additional pound is $0.24.[69] Staff estimated the average cost of additional shipping per pound at $0.16[70] for a total cost of $0.40 per additional pound of weight.

---

[67] This average cost is expected to be representative of the middle expense for devices that raise the front of the CSU. For instance, if the front of a CSU must be raised a significant amount, more than a small fraction of an inch to stabilize the unit, other changes might be required to the CSU in order to keep the top and drawers of the CSU relatively level and, for instance, avoid items on the top of the CSU from sliding off. For these reasons, lower cost currently available levelers probably have only a limited usefulness in modifying CSUs to meet the requirements of the draft final rule. The cost difference between lower cost levelers the average cost used by staff is added to account for redesign activities above and beyond the average redesign cost per CSU, as well as any unforeseen increased in material and labor costs. This average, however, does not account for the potential cost associated with increased risks of improper installation (RTA CSUs mainly) or use of these leveling devices.

[68] Adding weight to the back or base of the CSU increases its stability by shifting weight to the back edge of the fulcrum of the CSU. Currently, the back of many CSUs consists of a thin sheet of fiberboard or other light material. A heavier material could be substituted for the lighter materials currently used. Alternatively, manufacturers could simply add weights to the back, base, or other sections of the CSU to increase its stability. For instance, a 32 x 10 x ¾ inch particle board with melamine veneer panel would add at least 10 pounds to the CSU.

[69] Furniture manufacturers most likely would purchase materials at much less than retail prices; however, as discussed earlier, in order to produce conservative estimates (i.e. high estimates of costs to avoid overestimating net benefits of the draft rule), CPSC staff decided to avoid the inclusion of cost improvements associated with large scales of production and/or sourcing of materials. The use of higher retail prices might also offset the higher cost associated with short-term supply-chain disruptions in commodities markets, as well as the potential use of more expensive materials, argued by a few furniture manufacturers and associations during the NPR comment period.

[70] The average cost per additional pound of shipping was estimated using the MacroMicro's Drewry World Container Index that tracks freight cost of 40-foot containers via eight major routes, including spot rates and short-term contract rates. The costs per container were converted into cost per pound of furniture by estimating the maximum payload of a container. The total payload of a container carrying raw materials is roughly 58,642 pounds, CPSC staff assumed a 50% empty weight for furniture containers, or an average payload of 29,321 pounds of furniture per 40-pound container. For the two routes of incoming product taken into consideration in the analysis - Shanghai to New York and Shanghai to Los Angeles- the cost per container was converted into a cost per pound for the period from January 2019 to December 2021. It should be noted that the cost of global shipping has varied widely in this period of significant challenges for the global supply chain, from a low cost of $0.04 per pound in the early months of 2000 up

If the additional weight required is a few pounds, then companies only incur the cost of additional materials because minimal manufacturing changes would be needed, and it is unlikely additional packing materials would be required. When the additional weight required to make a CSU compliant is high,[71] then additional packing materials would likely be required. CPSC staff applied a 5-pound threshold in applying additional cost for added weight. CSUs that added 5 pounds or more in additional weight incur an additional packing expense of $1.61[72] per CSU. CSUs with additional weight below 5 pounds incurred no additional packing.

4.2.5. Reducing Drawer Extensions

The manufacturing costs of reducing the maximum drawer extensions[73] is unquantified, but likely low[74] because it does not necessarily require additional parts[75] or labor time.

4.2.6. Cost Estimate of Multiple Modifications to Comply with the Draft Final Rule

CPSC engineering staff examined five CSU representative models (or archetypes) that have been involved in tip-over incidents and are representative of the industry. The representative

---

to $0.35 in the last months of 2021. Given the long-range perspective used to measure the impacts of the rule, but maintaining CPSC's conservative estimation framework, staff used an average of $0.16 as representative of future shipping costs per pound of furniture. However, portions of shipping costs that are volume-based (where there are fixed costs per container) may not be increased when there is no change in the number of same-size dressers made with heavier back panels fit into the container.

[71] There might other additional costs associated with significant added weight, such as the cost of different hardware to attach the back to the CSU, the reinforcement of the CSU sides, or different manufacturing procedures required to manipulate the heavier weight (e.g., an additional worker or machine to handle the heavier board). These costs are considered relatively low when considered on average per-unit across all CSUs in the market; and are, therefore, not added as part of the main cost analysis. There are also possibly additional costs borne by consumers not accounted for in this analysis, such as the cost of handling more weight during transport or assembly of RTA units. On the other hand, manufacturers could also offset the additional weight on the back of the CSU by using lower-density or thinner materials for other CSU components, such as drawer fronts or cabinet tops.

[72] This estimate was developed using the average retail prices for extra-large shipping boxes of various sizes. The retail bundles used in developing this estimate, typically included 20 to 40 boxes (see for instance, https://www.packagingprice.com/). Arguably, manufacturers will be able to access prices much lower than these online retail estimates; however, this is a conservative estimate, which may also help offset any additional redesign costs needed to produce tailor-made packing materials for each CSU model.

[73] Reducing the maximum drawer extensions will decrease the tip-over moment, as defined by the draft final rule, by reducing the effective amount of weight added to the front of the CSU fulcrum when opening a drawer.

[74] The largest cost is likely the unquantified potential impact on consumer utility from CSUs with drawers that cannot open as widely.

[75] Out-stop devices are discussed in the 2014 update of the ASTM F2057 as part of the evaluation of the operational sliding length: "In the absence of stops, the operational length is length measured from the inside back of the drawer to the inside face of the drawer front in its fully closed position with measurements taken at the shortest drawer depth dimension minus 3.5 in."

models selected have been involved in tip over incidents, and estimated costs could be potentially higher than the average of all CSU models.[76] CPSC engineering staff conducted a detailed assessment of the potential combination of modifications – among the five representative models — that would improve the stability of and make these models compliant.[77] Staff does not consider the combination of modifications presented in this analysis as exhaustive; however the representative models capture a wide-range of potential sets of modifications and costs that would meet compliance with the draft final rule. For more details about how CPSC engineering staff selected these representative models and tested the different combinations of modifications, see Tab D.

For each of these representative models, there are multiple combinations of modifications ("sets of modifications") that can be implemented for compliance. CPSC staff estimates the cost of each set of modifications for each representative model using the cost estimate for individual modifications described in the previous section and summarized in Table 9.

[76] The average of all models would include units not involved in tip-over incidents which may require fewer modifications since those are likely more stable as is. Staff consider that the cost estimates associated with each combination of modifications for the CSUs selected will produce high-end cost estimates, consistent with CPSC's general cost estimation approach to avoid overestimating net benefits.
[77] TAB H of the NPR briefing package developed similar estimates of the cost of the modifications required to make these five CSUs compliant, and provided cost ranges for each. This analysis updated the base unit cost of the required modifications using information received during the NPR comment period or information collected by staff in response to comments provided by the public. As part of this analysis, CPSC staff also developed a set of assumptions that produce a central estimate for each set or a combination of sets of CSU modifications, along with the associated cost ranges.

Table 9. Average Cost per Type of Modification

Modification Method	Units	Average Cost of Method
Installed Interlock	**$ / installed device**	**$2.93**
Installation of Device	$ / device	$0.45
Minutes per Installation	avg. minutes / device	3
Cost per Hour	$ / hour	$8.96
Cost per Device	$ / device	$2.48
Front Edge or Feet Extension	**$ / device**	**$3.00**
Raised Front / Leveling Devices	**$ / device**	**$2.80**
Additional Weight	**$ / lb + packing**	**$0.40 x lb + $1.61 if 5+lbs**
Cost per Additional Pound	$ / lb	$0.40
Cost per Pound of Material	$ / lb MDF	$0.24
Cost of Shipping per Pound	$ / lb shipped	$0.16
Cost per CSU over 5 pounds added weight	$ / CSU	$1.61

For each set of modification, CPSC used the average cost in combination with the number of units needed to produce a cost estimate for that set. CPSC staff updated some of these cost estimates based on comments received from the NPR. CPSC staff added the average cost of each modification in each set and labeled that as a possible 'option' for compliance for that representative model. Each representative model has a few options. Finally, CPSC staff calculated a weighted average using costs for each option and the likelihood that manufacturers would select that option.

CSPC staff assumed that the share of manufacturers that would choose each set of modifications for each representative model is in inverse proportion to its cost; this way, the lowest cost set would be used by most manufacturers, while a smaller fraction of manufacturers would use each of the other sets of modifications.[78] For instance, for the first representative model, "CSU 1", the set of modifications with the lowest cost is expected to be chosen by 22.32 percent of manufacturers, while the set of modifications with the highest cost would be chosen by only 18.92 percent of manufacturers (See Table 10).

The following subsection presents a detailed description of each of the five CSU representative models assessed by CPSC staff, including a description of each the sets of modifications (options) considered to make the representative model meet the stability requirements of the draft final rule, as well as a table summarizing the cost of each option, and the average cost of

[78] Formula: Share of manufacturers who select Option X = (1 ÷ Cost of Option X) ÷ (∑(1 ÷ (Cost of Option X,Y,..Z)).

modifying each CSU. The two bottom rows of Tables 10 through 14 present the total cost of each option (set of modifications) for the corresponding CSU, and the expected likelihood that the option would be selected by a random manufacturer. This likelihood is also used to estimate the average cost for making this type of CSU compliant with the draft final rule.

Example 1

The first CSU evaluated is an RTA, 8-drawer dresser, consisting of two columns of three rows of drawers. The top row consists of two smaller drawers in each column. The dresser weighs 122 pounds and has a depth of 18.5 inches, a height of 37.625 inches, and a width of 59.25 inches. CPSC staff determined that this dresser could comply with the requirements of the draft final rule if one of the following options was taken (note that all options involve multiple methods to achieve compliance):

> Option 1: Add drawer interlocks to limit open drawers to one, raise the front of the CSU 0.485 inches. Staff consider the interlock requirement equivalent to the addition of 5 interlock mechanisms for the purposes of the cost estimate.
>
> Option 2: Add drawer interlocks to limit the open drawers to two, decrease the drawer extension by 0.5 inches, raise the front 0.75 inches, add a 5-pound counterweight. Staff consider the interlock requirement equivalent to the addition of 4 interlocks.
>
> Option 3: Add drawer interlocks to limit the open drawers to two, extend the front feet by 1 inch, add raise the front of the CSU 0.5 inches. Staff consider the interlock requirement equivalent to the addition of 4 interlocks.
>
> Option 4: Add a drawer interlock to limit the open drawers to two, decrease the drawer extension by 0.5 inches, extend the front foot by 1 inch, raise the front of the CSU by 0.5 inches. Staff consider the interlock requirement equivalent to the addition of 4 interlocks.
>
> Option 5: Decrease the maximum drawer extension by 1.5 inches, add a 1.7-inch foot extension, raise the front of the CSU 1.0 inch, add a 20-pound counterweight.

Table 10 presents the estimated cost of the options described above. The “likelihood of option” row reflects that we assume not all manufacturers pick the least costly option for compliance. Manufacturers might wish to pick a more costly option to retain design features that customers demand, or because their relative costs for the options are different from what CPSC staff estimated, due to local costs for parts and labor.

Table 10. Cost and Likelihood of the Proposed Modifications and Average Cost for CSU Example 1

Proposed Method	CSU - Example 1					
Options:	Option 1	Option 2	Option 3	Option 4	Option 5	Average
Interlocks	$14.64	$11.71	$11.71	$11.71	$0.00	$9.67
Foot Extension	$0.00	$0.00	$3.00	$3.00	$3.00	$1.92
Raised Front	$2.80	$2.80	$2.80	$2.80	$2.80	$2.80
Additional Counterweight	$0.00	$1.98	$0.00	$0.00	$7.94	$2.49
Packing	$0.00	$1.61	$0.00	$0.00	$1.61	$0.72
Cost of Set of Modifications	$17.44	$18.11	$17.51	$17.51	$15.35	$17.13
Likelihood of Option	19.64%	18.92%	19.56%	19.56%	22.32%	100.00%

Example 2

The second CSU evaluated is a 5-drawer chest of drawers consisting of one column of five rows of drawers, each with one drawer. The CSU weighs 150 pounds and has a depth of 18 inches, a height of 35 inches, and a width of 35 inches. CPSC staff determined that this dresser could comply with the requirements of the draft final rule if one of the following options was taken:

> Option 1: Add a drawer interlock to limit the number of open drawers to one, decrease the maximum drawer extension by 4.13 inch, add a 1.375-inch foot extension, and a 3-pound counterweight. Staff consider the interlock requirement equivalent to the addition of one interlock.
>
> Option 2: Add a drawer interlock to limit the number open drawers to one, decrease the maximum drawer extension by 1 inch, add a 1.5-inch foot extension, and a 35-pound counterweight. Staff consider the interlock requirement equivalent to the addition of one interlock.
>
> Option 3: Add a drawer interlock to limit the number of open drawers to one, add a 2-inch foot extension, add a 40-pound counterweight. Staff consider the interlock requirement equivalent to the addition of one interlock.
>
> Option 4: Add a drawer interlock to limit the number of open drawers to one, decrease the maximum drawer extension by 2 inches, add a 60-pound counterweight. Staff consider the interlock requirement equivalent to the addition of one interlock.
>
> Option 5: Decrease the maximum drawer extension by 2 inches, add a 2-inch foot extension, and add a 51-pound counterweight.

Table 11 presents the estimated cost of the options described above with regards to CSU Example 2.

Table 11. Cost and Likelihood of the Proposed Modifications and Average Cost for CSU Example 2

Proposed Method	CSU - Example 2					
Options:	Option 1	Option 2	Option 3	Option 4	Option 5	Average
Interlocks	$2.93	$2.93	$2.93	$2.93	$0.00	$2.54
Foot Extension	$3.00	$3.00	$3.00	$0.00	$3.00	$2.64
Raised Front	$0.00	$0.00	$0.00	$0.00	$0.00	$0.00
Additional Counterweight	$1.19	$13.89	$15.88	$23.82	$20.25	$10.80
Packing	$0.00	$1.61	$1.61	$1.61	$1.61	$0.91
Cost of Set of Modifications	$7.12	$21.43	$23.42	$28.36	$24.86	$16.38
Likelihood of Option	46.01%	15.28%	13.99%	11.55%	13.18%	100.00%

Example 3

The third CSU evaluated is a 7-drawer dresser arranged in three rows. The bottom two rows contain two drawers each and the top row contains three drawers. The CSU weighs 165 pounds and its dimensions are 55.3-inches wide, 21.6-inches deep, and 37.2-inches high. CPSC staff determined that this unit could pass the requirements of the draft final rule, if the modifications in one of the following options were made:

Option 1: Add drawer interlocks to limit the open drawers to one, add a 5-pound counterweight. Staff consider the interlock requirement equivalent to the addition of 5 interlocks.

Option 2: Add drawer interlocks to limit the open drawers to two, add a 10-pound counterweight. Staff consider the interlock requirement equivalent to the addition of 3 interlocks.

Option 3: Add drawer interlocks to limit the open drawers to three. Add a 1-inch foot extension, add a 5-pound counterweight. Staff consider the interlock requirement equivalent to the addition of 2 interlocks.

Option 4: Add drawer interlocks to limit the open drawers to one, decrease the drawer extension by 1 inch, add a 1-inch foot extension. Staff consider the interlock requirement equivalent to the addition of 5 interlocks.

Table 12 presents the estimated cost of the options described above with regards to CSU Example 3.

Table 12. Cost and Likelihood of the Proposed Modifications and Average Cost for CSU Example 3

Proposed Method	CSU - Example 3				
Options:	Option 1	Option 2	Option 3	Option 4	Average
Interlocks	$14.64	$8.78	$5.86	$14.64	$10.38
Foot Extension	$0.00	$0.00	$3.00	$3.00	$1.59
Raised Front	$0.00	$0.00	$0.00	$0.00	$0.00
Additional Counterweight	$1.98	$3.97	$1.98	$0.00	$2.11
Packing	$1.61	$1.61	$1.61	$0.00	$1.28
Cost of Set of Modifications	$18.23	$14.36	$12.45	$17.64	$15.30
Likelihood of Option	20.97%	26.63%	30.72%	21.68%	100.00%

Example 4

The fourth CSU evaluated is similar to Example 3 but weighs 29.5 pounds more. CPSC staff determined that it could conform to the requirements of the draft final rule, if the modifications in one of the following options were made:

Option 1: Add a drawer interlock mechanism to limit the open drawers to three. Staff consider the interlock requirement equivalent to the addition of 2 interlocks.

Option 2: Decrease the maximum drawer extension by 1 inch and add a 24-pound counterweight.

Option 3: Extend the foot by 1 inch and add a 20-pound counterweight.

Option 4. Add a 35-pound counterweight.

Table 13 presents the estimated cost of the options described above with regards to CSU Example 4.

Table 13. Cost and Likelihood of the Proposed Modifications and Average Cost for CSU Example 4

Proposed Method	CSU - Example 4				
Options:	Option 1	Option 2	Option 3	Option 4	Average
Interlocks	$5.86	$0.00	$0.00	$0.00	$2.47
Foot Extension	$0.00	$0.00	$3.00	$0.00	$0.67
Raised Front	$0.00	$0.00	$0.00	$0.00	$0.00
Additional Counterweight	$0.00	$9.53	$7.94	$13.89	$6.68
Packing	$0.00	$1.61	$1.61	$1.61	$1.05
Cost of Set of Modifications	$5.86	$11.14	$12.55	$15.50	$9.88
Likelihood of Option	42.19%	22.18%	19.69%	15.94%	100.00%

Example 5

The fifth CSU evaluated by CPSC staff was a three-drawer RTA chest of drawers. The CSU measures 27.625-inches wide, 15.625-inches deep, 28.125-inches high, and weighs 45 pounds. Each drawer extends about 8.25 inches. CPSC staff determined that if the modifications in one of the following options were made, the CSU would meet the requirements of the draft final rule:

> Option 1: Include a drawer interlock mechanism, extend the foot of the CSU by 6.6 inches.[79] Staff consider the interlock requirement equivalent to the addition of one interlock.
>
> Option 2: Include a drawer interlock mechanism, extend the foot of the CSU by 6.25 inches, and add a 1.5-pound counterweight. Staff consider the interlock requirement equivalent to the addition of one interlock.
>
> Option 3: Add drawer interlocks and a 50-pound counterweight. Staff consider the interlock requirement equivalent to the addition of one interlock.
>
> Option 4: Add drawer interlocks, reduce the drawer travel by 1 inch, extend the foot of the CSU by 2.25 inches, add a 25-pound counterweight, and raise the front of the CSU by 0.37 inches. Staff consider the interlock requirement equivalent to the addition of one interlock.

Table 14 presents the estimated cost of the options described above with regards to CSU Example 5.

[79] The same $1 to $5 cost is assumed as it assumed for all feet extensions. However, an extension greater than 6 inches would likely cost more than the 1- or 2-inch extensions used in other cases.

Table 14. Cost and Likelihood of the Proposed Modifications and Average Cost for CSU Example 5

Proposed Method	CSU - Example 5				
Options:	Option 1	Option 2	Option 3	Option 4	Average
Interlocks	$2.93	$2.93	$2.93	$2.93	$2.93
Foot Extension	$3.00	$3.00	$0.00	$3.00	$2.67
Raised Front	$0.00	$0.00	$0.00	$2.80	$0.37
Additional Counterweight	$0.00	$0.60	$19.85	$9.92	$3.68
Packing	$0.00	$0.00	$1.61	$1.61	$0.39
Cost of Set of Modifications	$5.93	$6.52	$24.39	$20.26	$9.70
Likelihood of Option	40.91%	37.18%	9.94%	11.97%	100.00%

Appendix B presents additional information regarding the physical characteristics of the five CSUs evaluated by the staff, and the proposed sets of modifications.

4.2.7. Discussion of the Cost and Other Impacts of the CSU Modifications

The increased manufacturing costs of the draft final rule include labor and materials costs of modifications such as the use of drawer interlocks,[80] counterweight,[81] extending the front feet, and the use of devices or structural modifications to raise the front of CSUs.[82] Table 15 summarizes the range of cost estimates obtained for these five CSUs:

Table 15. Incremental Labor and Materials Cost for Five Representative CSUs

CSU Model	Lowest	Highest	Average
CSU 1	$15.35	$18.11	$17.13
CSU 2	$7.12	$28.36	$16.38
CSU 3	$12.45	$18.23	$15.30
CSU 4	$5.86	$15.50	$9.88
CSU 5	$5.93	$24.39	$9.70

[80] Of the 22 options considered to make these five CSUs compliant, only 5 did not require the use of interlocks. Interlocks may become a prevalent characteristic of CSU after the implementation of the draft final rule.
[81] Of the 22 options considered to make these five CSUs compliant, 16 required the use of counterweight. Ten of those 16 required the addition of counterweights of at least 20 pounds. This seems to suggest that to comply with the draft final rule, CSUs, on average, will become heavier than CSUs currently on the market.
[82] Although staff attempted to quantify most of the direct costs of modifying CSUs to meet the requirements of the draft final rule, the cost information related to many of the methods proposed for compliance is very limited. Staff used the best information available, and made the assumptions considered most reasonable under each situation.

The weighted average cost of labor and materials of all proposed modifications for the five representative modifications are between $9.70 and $17.13. CPSC staff added $0.51 for the cost of redesign and testing to the weighted average cost of labor and material to get the total production cost for representative model. In total, incremental costs for the five representative models are between $10.21 and $17.64 and shown in Table 16. These represent the incremental cost of the draft final rule.

Table 16. Incremental Cost for Labor & Materials plus Design & Testing for Five Representative CSUs

CSU Model	Incremental Cost of Labor & Materials per CSU	Incremental Cost of Design & Testing per CSU	Incremental Production Cost per CSU
CSU 1	$17.13	$0.51	$17.64
CSU 2	$16.38	$0.51	$16.89
CSU 3	$15.30	$0.51	$15.81
CSU 4	$9.88	$0.51	$10.39
CSU 5	$9.70	$0.51	$10.21

To calculate total annual costs, CPSC staff assumed equal share among the five representative models for the 17.68 million CSUs estimated to be produced in the first year of rule (2023).[83] The total annual cost of the draft final rule is $250.90 million.

5. Benefit-Cost Summary, Sensitivity Analysis

5.1. General Conclusions

Staff estimated that the societal costs of deaths and injuries from CSU tip-over incidents to be $449.61 million annually. If all CSUs met the requirements of the draft final rule, the societal cost of these incidents would have been reduced by $307.17 million annually. This reduction is the estimated annual benefits of the draft final rule. The estimated annual benefits per CSU in use are $1.34 annually. Using the CSU expected useful life of 15 years, the average benefit of the draft final rule per CSU is $15.95 at a 3 percent discount rate, and $20.04 without discounting.

A more fulsome discussion on the impact to consumer utility is in the sensitivity analysis that qualitatively describes the potential creation of deadweight loss in section 5.2.2. Aside from the potential consumers priced out of the market and the potential discontinuation of certain CSU

[83] Forecasted sales for 2023 lower than 2021 sales due to staff considering sales for 2021 an aberration from the normal trend due to the recovery of the COVID-19 pandemic. Forecasted sales for 2023 follows pre-pandemic historical trends.

models, most consumers will not experience a decrease in utility from CSUs and may experience an increase from the enhanced safety of the product.

CPSC staff used five CSU representative models, that represent the variety in the market, to estimate average cost for the set of modifications that each representative model could implement to be compliant with the draft final rule. The weighted average incremental cost (modifications, redesign, and testing) for representative models CSU 3, 4, and 5 are $15.81, $10.40, and $10.21, respectively; are below the expected benefits of the draft final rule. For the other two representative models - CSU 1 and 2 - the average incremental costs are $17.64 and $16.89. These are 5 and 10 percent higher, respectively, than the average expected benefits per CSU. However, if CPSC staff had assumed firms seek the lowest-cost modifications, the benefits would exceed the costs for all five representative models of CSUs, as shown in Table 17.

Table 17. Low-Cost Option for Each of the Five Representative CSUs

CSU Model	Cost of Option with Lowest Incremental Cost	Incremental Cost of Design & Testing per CSU	Overall Average Cost per CSU
CSU 1	$15.35	$0.51	$15.86
CSU 2	$7.12	$0.51	$7.63
CSU 3	$12.45	$0.51	$12.96
CSU 4	$5.86	$0.51	$6.37
CSU 5	$5.93	$0.51	$6.44

To calculate total annual costs for the low-cost modifications approach, CPSC staff assumed equal share among the five representative models among the 17.68 million CSUs estimated to be produced in the first year of rule (2023). The total annual costs of the draft final rule, if manufacturers all pursue a lowest-cost approach, is $174.22 million.

Staff's primary measures of the outcome of this analysis are the expected net benefits of the draft final rule (benefits minus costs), and the benefit-cost ratio (BCR or benefits over costs), which provide similar assessments of the outcome of the rule from two different perspectives. The expected net benefits per CSU, at their average, are positive for CSUs 3, 4, and 5, since the benefits exceed the average costs of all sets of modifications, and negative for CSUs 1 and 2, as shown in Table 18. As can be inferred from the benefit-cost ratio shown in Table 20, the benefits for CSUs 4 and 5 exceed the costs by over 50 percent, benefits essentially equal costs for CSU 3, and are short by 10 percent or less for CSUs 1 and 2. Taken together, the benefits of the draft final rule bear a reasonable relationship to the cost of implementation.

Table 18. Net Benefits and BCR at the Midpoint for Each of the Five Representative CSUs

CSU Model	Benefits over the CSU Lifecycle	Average Cost of All Sets of Modifications	Net Benefits per CSU	Benefit-Cost Ratio
CSU 1	$15.95	$17.64	-$1.69	0.90
CSU 2	$15.95	$16.89	-$0.94	0.94
CSU 3	$15.95	$15.81	$0.14	1.00
CSU 4	$15.95	$10.39	$5.56	1.54
CSU 5	$15.95	$10.21	$5.74	1.56

If manufacturers sought the lowest cost set of modifications, then the benefits exceed the costs for all five representative models for CSUs, as shown in Table 19. Even if the lowest cost set may not be chosen by all manufacturers, the draft final rule allows for sets of modifications for which the benefits meet or exceed the costs. The set of modifications and solutions provided in this analysis are basic designs developed by CPSC staff, which will likely be surpassed by the less costly solutions that industry will achieve over time.

Table 19. Net Benefits and BCR at the Lowest Cost Set for Each of the Five Representative CSUs

CSU Model	Benefits over the CSU Lifecycle	Lowest Cost Set of Modifications	Net Benefits per CSU	Benefit-Cost Ratio
CSU 1	$15.95	$15.86	$0.09	1.01
CSU 2	$15.95	$7.63	$8.32	2.09
CSU 3	$15.95	$12.96	$2.99	1.23
CSU 4	$15.95	$6.37	$9.58	2.50
CSU 5	$15.95	$6.44	$9.51	2.48

5.2. Sensitivity Analysis

The benefits and costs of the draft final rule are estimates that depend upon a relatively high number of inputs and assumptions. The benefits, for instance, are dependent on the different sets of incidents considered in the analysis, the value of a statistical life, and the societal cost of the different type of injuries; the benefits per CSU are also influenced by the number of CSUs in use and the expected CSU lifecycle, among other considerations. The costs of the draft final rule are also dependent on inputs and assumptions. Costs are driven by the modifications required to make the CSU compliant, the number of CSUs and CSU models, as well as other market variables. Some of these inputs and assumptions have a significant impact on the outcome of the analysis, while others are less significant.

In conducting the analysis, staff seek to use inputs and assumptions that best reflected reality. However, during the NPR comment period multiple commenters suggested that the analysis include alternative values for inputs and assumptions of significant uncertainty, as well as discuss the impacts of the trends observed over time in the data. In this section, staff examine the impact of using alternative values for some of the key inputs and assumptions of the analysis.

Public comments suggested some of the alternative inputs used here.

5.2.1. Higher Value of Statistical Life for Children

In estimating the benefits associated with reduced mortality, staff applied an estimate of the value of a statistical life of $10.5 million per premature death potentially averted by the draft final rule. This estimate was based on estimates of the VSL developed by the EPA.[84] In the main analysis, we did not distinguish between the VSL of children and adults.

Recent studies have suggested that the VSL for children could be higher than that for adults. Specifically, people might be willing to pay more to reduce the risk of premature death of children than to reduce the risk of premature death of adults. A review of the literature conducted for the CPSC suggested that the VSL for children could exceed that of adults by a factor of 1.2 to 3, with a midpoint of around 2 (IEc, 2018). Using the midpoint, the VSL for children would be $21.0 million per premature death averted, and $31.5 million if staff consider the higher end of the range. Given that the draft final rule could reduce child deaths by 4 per year, the value of the benefit from reduced children mortality would be $70.5 million annually at two times VSL and $105.75 million annually at three times VSL, instead of $35.25 million. This would increase the annual benefit per CSU (at $1.34) by 15 cents and 30 cents, respectively. Over a useful life of 15 years, this would come to an additional $2.25 to $4.50 of benefit per CSU, which would lead to an annual benefit of $17.78 to $19.61 per CSU at a 3% discount rate. As Table 20 shows, at two times VSL the average benefit per CSU now exceed the average costs of each of the five CSUs proposed by staff, in addition to exceeding the cost of the lowest cost set of modifications.

[84] As noted earlier (see footnote 30), the VSL does not place a value on individual lives, but rather, it represents an extrapolated estimate based on the rate at which individuals trade money for small changes in mortality risk (OMB, 2003).

Table 20. Benefits at Factors of VSL for Children versus the Average and Lowest-Cost Modification for Each of the Five CSUs

CSU Model	Benefits per CSU at 2 x VSL for children	Benefits per CSU at 3 x VSL for children	Average Cost per CSU	Lowest Cost Set of Modifications
CSU 1	$17.78	$19.61	$17.64	$15.86
CSU 2	$17.78	$19.61	$16.89	$7.63
CSU 3	$17.78	$19.61	$15.81	$12.96
CSU 4	$17.78	$19.61	$10.40	$6.37
CSU 5	$17.78	$19.61	$10.21	$6.44

5.2.2. Deadweight Loss

CSU manufacturers will likely transfer some or all their costs of compliance to consumers by raising the wholesale and retail prices of units. Staff cannot estimate precisely how much manufacturers will pass compliance costs onto consumers. Public comments to the NPR included estimates of increased retail prices ranging from zero to hundreds of dollars per CSU. CPSC staff assesses that retail prices will likely reflect some costs of compliance, and that those increased prices will be more than some consumers are willing or able to pay. Similarly, if some manufacturers find that the retail or wholesale price increase is not enough to maintain their profit margins, they may cease production.

In economics, deadweight loss refers to losses in production and sales due to a government intervention in the market, where the price per unit is higher than the pre-regulation equilibrium, and the quantity demanded is less than manufacturers would be willing to supply. The ability of manufacturers to transfer the costs of compliance to consumers depends on the price elasticity of demand, which is the responsiveness of demand to a change in price. Given the public comments about retail price increases, there is no apparent consensus on the elasticity of demand for CSUs. Some commenters, who were manufacturers and importers, commented that consumers would not accept any price increase, while others commented that the retail price would rise in multiples of the cost of compliance, so that retailers could maintain their profit margin.

However, consumers may also consider the safety enhancements of compliant CSUs to be a different, new product that is worth the price increase. Under this case, deadweight loss to both consumers and producers would be minimal, because consumers would receive an increase in utility (from increased safety) along with higher price, and manufacturers could meet that demand at the higher price.

There may be other non-price losses and gains to consumer utility because of this rule. For example, the discontinuing of certain designs or CSUs becoming less convenient to use due to features added to comply with the draft final rule. However, staff does not expect such losses to be substantial because compliant CSUs will still be useful for their intended purpose – storing clothing. There may be other, non-price increases in consumer utility because of this rule,

particularly from the stability ratings information, where consumers will have more information to inform their purchase. Similarly, some manufacturers may find that there is increased demand for units with higher stability ratings, and potentially make more profit.

5.2.3. Qualitative Discussion

There are other factors that could impact the costs and benefits of this rule in the short- and long-term. CPSC staff does not have the data to quantify the precise impact of many of these factors and instead describes them qualitatively in this section.

Benefits could be higher or lower, depending on how fast the existing CSUs in use are replaced. The costs and benefits in the main analysis assume a product life for CSUs is 15 years on average. However, consumers may place a high value on the safety provided by compliant CSUs and accelerate their replacement of existing CSUs. In this case, the benefits of this rule would accrue more quickly. It is also possible, as mentioned by several public commenters, that consumers will not be willing to pay the higher price for compliant CSUs, and therefore the replacement of currently existing CSUs will be delayed, possibly up to years. Under this case, the benefits would accrue more slowly.

Several commenters noted that compliance would make CSUs heavier and have indirect costs on retailers. Heavier furniture could require more delivery drivers, bigger delivery trucks, or cause higher injury rates from moving heavier furniture. However, this assumes that adding weight to CSUs will be the primary method to achieve compliance, which may not be the case – it is also likely that drawer interlocks and feet extensions will be common. It also assumes that CSUs will need to be much heavier to meet compliance, while most of the compliance modifications analyzed for cost involved 20 pounds or less of added weight. It is also possible, given that lightweight units which when filled with clothing would weigh less than 57 pounds are excluded from the scope of this rule, that more such lightweight units will be produced and sold.

CPSC staff estimated the incremental costs for compliance assuming most CSUs follow the current voluntary standards. Compliance costs may be higher for units that are not currently compliant with the voluntary standard. However, compliance costs may be lower for units that are compliant with the existing or forthcoming ASTM standard and require only modest modifications. Additionally, the marketplace may find innovative solutions to achieve compliance in the long term that will reduce costs below the estimates in the main analysis.

Testing costs could be higher or lower than estimated, depending on where the tests take place. If the industry continues to primarily rely on imports, the costs could be lower if all the testing takes place in low wage countries. Testing costs could be higher on average because the product shares of general-use CSUs compared to CSUs for children could shift in the short term, as consumers demand safer CSUs specifically marketed for children. Children's product testing requires more expensive third-party testing.

6. Alternatives to the Draft Proposed Rule

6.1. No Regulatory Action

If the Commission took no regulatory action, it is possible that CSU injuries and deaths would decline due to the phase-out of CRT televisions (however this portion of decline is largely in place already and these injuries and deaths were not considered in the base analysis), the success of "Anchor It" campaigns, the deployment of aftermarket stabilizing devices, or compliance with the ASTM standard. Staff concludes that these factors could reduce injuries and deaths by a non-zero amount, but much less than this draft final rule.

The ongoing efforts of the Commission to encourage families with small children to anchor their furniture to a wall could further reduce the number of deaths and injuries if it becomes more effective. However, several studies have indicated that the rate at which households with young children anchor furniture is low (Tab C), despite the fact that the Commission has made its Anchor-It campaign a major focus, so it is unclear how this draft final rule would be more effective. Furthermore, additional barriers to anchoring exist including the direct and indirect costs of anchoring and the possibility that landlords will not allow modifications to walls. According to one website, the cost to have furniture anchored to a wall by a professional "child-proofing" service provider ranges from $6 to $30 per item. However, these costs are likely to apply when the service provider is providing multiple services in a single visit, such as anchoring multiple pieces of furniture, adding safety latches to cabinets, and installing safety gates. The cost to anchor a single item, such as when a single new CSU is brought into a home, are likely to be higher. Also, furniture may not be anchored properly. As Tab C explains, CPSC is aware of at least some incidents in which furniture that was anchored tipped over; and staff is aware of anchors failing at the connection to the furniture and others at the connection to the wall, and there is no standard that addresses connections to the furniture or to the wall.

Therefore, non-regulatory approaches are unlikely to significantly reduce the risk of injury from CSU tip overs.

6.2. Require a Stability Rating for CSUs, But Not a Minimum Stability

This alternative would include a test method to assess the stability of any particular CSU model, from which a stability rating would be calculated for that model and require that rating to be provided for each CSU on a hang tag. A description of such a requirement along with background on the use of similar requirements at other agencies is provided in Tab E. A stability rating would give consumers information on the stability of the specific models that they were considering purchasing, which they could consider in their purchase decisions. A stability rating system could also give manufacturers an incentive to achieve a higher stability rating to increase their competitiveness or increase their appeal to consumers that desired CSUs that were less likely to tip-over. The hang tag could also note that consumers should not rely just on

the stability ranking, and note other steps to provide stability, such as anchoring. However, there would be no minimum stability requirement.

This option would aim to address the hazard by making hazard information available to consumers at the point of purchase. It would allow consumers who want to purchase more stable CSUs to do so, while those who did not believe the additional stability was worth the additional cost could still buy furniture with lower stability ratings.

This alternative does not provide more or additional information beyond the hang tag requirement in the rule. It would not address risk to children who might be exposed to the CSU tip-over hazard outside their homes, or to CSUs purchased before the child's birth or by CSUs purchased by others for them or by CSUs purchased by people who underestimated the likelihood of tip over. The long service life of CSUs and the unpredictability of visitors or family changes in that timespan means that these potential future risks might not be considered at the time of the original purchase. A person purchasing a CSU today might not be considering the exposure of future children to the stability hazard, or to visitors and guests for the next 15 years.

However, this alternative could prompt voluntary improvements in CSU stability. Some retailers might not want to offer furniture with low stability ratings, which could put additional pressure on manufacturers to modify or eliminate the lowest rated models in their product lines. There is evidence that such safety ratings information requirements have improved safety in some situations. For example, the National Highway Traffic Safety Administration (NHTSA) found that the safety ratings of automobiles improved after they introduced their star rating system for comparing the frontal crashworthiness of automobiles in 1978 (Kahane 1994). Later, in 2001, NHTSA introduced another rating system to allow consumers to compare the rollover resistance of passenger cars, based on the static stability factor (SSF) of the vehicles. The SSFs for sport utility vehicles (SUVs) generally fall in the range of 1 to 1.3. In 2001, the first year of NHTSA's rollover resistance rating, the average SSF of SUVs was 1.12, and only 12.7 percent of the models had SSFs exceeding 1.2. By 2006, the average SSF of SUVs was 1.18, and the proportion that exceeded 1.2 had increased to 31.7 percent (Kallan and Jermakian, 2008).

Because this alternative would not establish a minimum safety standard, it would not require that manufacturers stop offering or modify any CSUs, thus allowing the same CSUs which tip over in the incidents described in the package to continue to be sold. The only direct cost of this alternative would be the cost to manufacturers of testing their CSUs to establish their stability rating and labeling their CSUs in accordance with the required information. Any changes in the design of the CSUs that result from this alternative would be the result of manufacturers voluntarily responding to changes in consumer demand for particular models in response to the new information on the stability of particular models.

However, while the costs of a stability rating system and labeling requirement would be significantly lower than the draft final rule, and there is evidence that similar rating systems have resulted in improvements in product safety for automobiles, there is no certainty it would result in safety improvements for CSUs. Unlike for automobiles where automobile insurance rates often reflect the safety ratings of the automobiles and may further incentivize improvements, no

such mechanism is known for CSUs, and we are unable to estimate the extent to which the stability information would affect consumer purchases or reduce CSU tip-over incidents. We do not know the extent to which consumers would demand or manufacturers would offer CSUs with the higher ratings. And if the more stable options are more expensive, as is likely, consumers might not purchase them. Multiple commenters on the NPR claimed that customers would not value a higher rating, or that all CSUs will end up with similar ratings under the current rule. Therefore, although this alternative could lead to a reduction in deaths and injuries from tip overs, there is no certainty that it would, because it might not provide useful information to differentiate between CSUs, or customers might not value that information. Because it is not clear that this alternative would result in any reduction in deaths and injuries, staff does not recommend this alternative. Staff does recommend a rating system to compare the stability of the units that already meet the proposed performance requirements and hang tag requirements as one element of the draft final rule, but benefits are only certain if there is a minimum stability rating required.

6.3. Mandate a More Rigorous Standard (Draft Final Rule, But Addressing the Climbing and Pulling Forces and Moments of 60-Pound Children, Instead of 51.2-Pound Children)

The Commission considered proposing a rule with more rigorous requirements, such as a rule that would address the climbing and pulling forces of 60-pound children rather than 51.2-pound children. About 74 percent of CSU tip-over injuries involving children occur to children ages 4 years and younger,[85] and these are already addressed by the draft final rule, because the 95th percentile weight for 4-year-old children is approximately 52 pounds. The draft final rule would also address some of the injuries to children who are 5 and 6 years old as well, because many of these children also weigh less than 51.2 pounds. Mandating a rule that would protect consumers from tip overs that result from the forces generated by 60-pound children would likely increase the benefits due to a reduced number of child fatal and nonfatal injuries. The incident data, however, shows few injuries occur to children in the 51.2 to 60-pound range.[86] Therefore, it is likely that the incremental cost of redesigning and producing CSUs compliant with the 60-pound force may outweigh the benefits from reductions to child-related injuries in the 51.2 to 60-pound range. Because this alternative would provide only a limited increase in benefits, but a likely disproportionally higher level of costs than the draft final rule, staff does not recommend it.

6.4. Mandate ASTM F2057 – 19 but with a 60-Pound Test Weight

Another alternative would be to mandate a standard like ASTM F2057 – 19 but replace the 50-pound test weight with a 60-pound test weight. As discussed in the ANPR, 60 pounds better represents the 95th percentile weight of 5-year-old children, which is the age ASTM F2057-19

[85] Based on the NEISS estimates for the period 2015 through 2019
[86] Includes estimated weights based on reported age.

claims to address. However, a 60-pound test weight does not equate to protecting a 60-pound child because, as the UMTRI study demonstrates, children generate forces greater than their weight during certain interactions with a CSU.

This alternative would be less costly than the draft final rule, because, as discussed above, based on CPSC testing in the NPR briefing package, about 57 percent of CSUs on the market at the time of the NPR would already meet this standard. The cost of modifying CSUs that do not comply is likely to be less than modifying them to comply with the draft final rule, which is more stringent than mandating ASTM F2057 – 19 with a modified higher test weight.

By increasing the test weight, it is possible that this alternative would prevent some CSU tip overs. However, this alternative still would not account for the horizontal and dynamic forces of a child climbing on a CSU, or account for the effect of multiple open and filled drawers, or CSUs placed on carpet. Because this alternative does not account for the horizontal and dynamic forces of a child climbing or for the effects of carpeting or filled, open drawers, it is less effective at reducing tip overs than the draft final rule. It would likely only protect children who weigh around 38 pounds or less, which is approximately the 75th percentile weight of children 3 years of age. For this reason, staff does not believe that this alternative would adequately address the hazard, and does not recommend it.

6.5. Mandate Potential New ASTM Standard

Another alternative would be to wait for ASTM to finalize a new version of the ASTM F2057 standard. At that point, the Commission could either (1) rely on the voluntary standard, in lieu of rulemaking, or (2) mandate compliance with the voluntary standard if the voluntary standard was likely to adequately reduce the risk of injury but there was not substantial compliance with it, or (3) mandate the requirements that have been considered for the potential new ASTM standard.

As discussed in Tab F, ASTM balloted possible changes to the ASTM F2057 standard in May 2022 and July 2022 and staff submitted letters[87] and votes opposing those changes because they did not adequately address the hazards. The possible stability tests in the potential new ASTM standard are summarized in Table 21.

[87] See Tab F, Appendix F2 for CPSC's statements for Negative Ballot Votes.

Table 21. Summary of Possible Stability Tests in the Potential New ASTM Standard

	Test configuration
Stability test 1	• CSU on a flat level surface • All extendable elements and doors open* • Extendable elements loaded with 8.5 pounds per cubic foot of their volume (fill weight),** space behind doors loaded with 8.5 pounds per cubic foot of half of their volume • No additional force
Stability test 2	• Back feet of CSU on 0.43-inch block • All extendable elements and doors open* • No fill weight in extendable elements • 60-pound weight applied to face of open extendable element
New stability test	• CSU on a flat level surface • All extendable elements and doors open* • No fill weight in extendable elements • 10-pound outward horizontal force applied to highest reach point 56 inches or below

*Except those that are interlocked with an interlock that meets specified requirements, including a 30-pound pull test.
** Interlocked extendable elements are only loaded with a fill weight if 50% or more, by volume, are open.

As of September 2022, ASTM has not published a new version of the standard, therefore staff does not know if or when a new standard will be published or what the final requirements will be, or what compliance levels there would be with it. The requirements might be different from what is in the table above.

Staff conducted a preliminary assessment of the possible stability requirements in the draft standard and identified several concerns, including:

- Tests do not simulate multiple simultaneous factors that are demonstrated to decrease stability and to exist simultaneously during known incidents—*i.e.*, multiple open/filled drawers, carpet, and forces from children's dynamic interactions.
- As discussed above, a 60-pound test weight does not equate to protecting a 60-pound child because children generate forces greater than their weight when climbing a CSU. The possible stability test in the potential new ASTM standard substantially underestimates the forces generated during child-climbing interactions. Incident data show climbing interactions to be among the most common interactions during incidents.
- The 10-pound outward horizontal force is lower than the demonstrated child pull strength.

This alternative would be less costly than the draft final rule in terms of labor and materials to achieve compliance for some but not all CSUs and testing to demonstrate compliance would still be a cost for manufacturers. ASTM members have estimated that some CSUs currently on the market could meet these stability requirements, and that many of the CSUs that don't currently

meet the requirements could be modified to meet them with the addition of only an interlock system. The one-time cost of redesign, and ongoing labor and materials costs of modifying CSUs that do not comply with the draft ASTM standard is likely to be less than modifying them to comply with the draft final rule, but not in all cases. For example, note that for example CSU number 4 in the cost analysis, one of the options to achieve compliance was indeed only an interlock system.

As discussed in the option above, by increasing the test weight, it is possible that this alternative would prevent some CSU tip overs. However, this alternative still would not account for the forces of a child climbing on a CSU, or account for the effect of filled drawers. As the NPR and draft final rule explain in detail, the multiple simultaneous factors (multiple open and filled drawers, on carpet, with interaction forces) that contribute to instability and are shown in tip-over incidents need to be accounted for in the stability requirements for them to adequately assess and address the hazard.

For these reasons, staff does not consider this alternative likely to adequately reduce the hazard, even if ASTM did make the balloted updates and there was substantial compliance with the updated ASTM standard. Moreover, this alternative would still require manufacturers to redesign CSUs and test them for compliance. While the cost of this alternative would likely be less than the rule for some CSUs, it would not be zero, and for other CSUs, the cost might be similar to the cost of compliance with the draft final rule. For many CSUs, it is likely that the modifications required would be nearly as costly as those for this rule, while the benefits would likely be far less. Therefore, staff does not recommend this alternative. It does not address the hazard as well and is likely less cost effective (the reduction in costs compared to compliance with the rule are likely not as large as the reduction in benefits as compared to the draft final rule).

6.6. Later Effective Date

The draft final rule includes an effective date of 180 days after the final rule is published in the *Federal Register*. That would give manufacturers approximately 6 months to understand the requirements, redesign all their CSUs to comply with the requirements, and begin manufacturing CSUs that meet the requirements. Given that hundreds of manufacturers, including importers, collectively will have to modify thousands of CSU models, it could be challenging for some firms to meet the 180-day effective date. This could cause a disruption in the supply of CSUs, or result in fewer choices being offered to consumers, at least in the short term. To reduce the costs or mitigate any disruption, CPSC staff considered recommending a longer effective date. However, delaying the effective date would delay realizing the potential benefits of reducing deaths and injuries from CSU tip overs. Therefore, CPSC staff is not recommending an effective date longer than 180 days.

7. Summary and Conclusions

If the draft final rule was promulgated, the benefits of the draft final rule per CSU at a 3 percent discount rate are estimated at $15.95, as a result of reducing serious injuries and deaths of children and adults from CSU tip overs.

CPSC staff analyzed five CSU representative models to determine what types of modifications would allow those units to comply with the draft final rule and estimate the costs. If the five CSUs, for which compliance costs were estimated in this assessment, are a good representation of increased production cost for the industry, on average, the benefits of the draft rule generally meet or exceed the cost of making these CSU units compliant. The average incremental costs of modifying CSUs 3, 4, and 5 are $15.81, $10.39, and $10.21. All three would have compliance costs below the expected benefits of the draft final rule. For the other two representative models - CSUs 1 and 2 - the average incremental costs of compliance are $17.64 and $16.89. However, if manufacturers pursued a lowest-cost approach, all five representative models' benefits would exceed costs.

The sensitivity analysis indicates that if staff had used the lower cost modification assumptions, a higher child VSL, or considered consumer demand for safer CSUs leading to faster replacement of existing CSUs, the draft rule would have higher net benefits.

The estimates of costs and benefits in this final regulatory analysis have been revised to reflect more current and complete data than was used in the preliminary regulatory analysis prepared with the NPR. Much of this new data came from public comments, which are discussed in detail in Tab K. In addition, Tab K includes a summary of significant issued raised by comments regarding the preliminary regulatory analysis and an assessment of those comments.

The estimates discussed in the paragraphs above represent the average cost of proposed modifications for this specific group of five CSUs alone, under conservative assumptions (higher costs, lower benefits). Even though these may be representative of a set of CSUs in the market, CPSC staff note that these are only five CSU models out of the thousands of models available on the market for which the cost of modifications may differ. The cost of the modifications required to make other CSUs compliant will likely be higher for some models and lower for other models. However, CPSC staff assesses that the cost of the modifications associated with these five CSUs are representative of the average cost of modifications industry will incur to achieve compliance with the draft final rule.[88]

[88] The five representative models selected by CPSC engineering staff were involved in tip over incidents, which might indicate they were less stable than the average model before any of the modifications were implemented. Therefore, it is likely than the cost of the modifications required to make a majority of models in the market compliant -especially those not involved in any tip over incidents- would be lower than the cost of the modifications proposed for these five representative CSU models. Staff considers the estimated costs for these five models consistent with the conservative approach (higher costs, lower benefits) used by CPSC.

The draft final rule could impact consumers in other ways, including causing many CSUs to be heavier, making them more difficult to move or assemble. CSUs with some dimensions might prove difficult to modify to meet the requirements of the draft final rule and could be withdrawn from the market. RTA CSUs are frequently less expensive than factory-assembled CSUs. To the extent that RTA CSUs could be disproportionately impacted by the draft final rule because they tend also to be lighter than factory-assembled CSUs and thus often less stable, the draft final rule could have a disproportionate impact on lower-income consumers and others who desired less expensive CSUs; but would also provide those consumers with the benefit of a reduced risk of injuries and deaths.

Staff considered several alternatives to the draft final rule. Five of the alternatives could be deemed less stringent than the draft final rule. These were (1) not taking any regulatory action, (2) mandating a hang tag providing a stability rating only with no minimum stability performance requirements, (3) mandating a requirement similar to the current voluntary standard but requiring a 60-pound test weight, and (4) mandating the ASTM standard currently in progress, and (5) extending the effective date of implementation beyond 180 days. Staff found that these alternatives would be less effective than the draft final rule. Staff does not recommend any of these alternatives because they would not likely reduce deaths and injuries from CSU tip overs to nearly the same extent as the draft final rule and would generate lower net benefits for society.

A more stringent alternative was considered, one that attempted to address incidents involving the forces generated by children weighing 60 pounds or less climbing the front of CSUs, as opposed to the 51.2 pounds or less that the draft rule attempts to address. Staff did not recommend this alternative because it would likely only increase the benefits slightly, while it might increase the costs of implementation disproportionately. Staff notes that 51.2 pounds is approximately the 95th percentile weight for 3-year-olds. Almost 94 percent of fatalities and about 66 percent of nonfatal injuries involving children and CSUs without television are to children 3 years of age or younger, and these are largely addressed by the draft rule.

8. References

Asch, Peter, 1988. Consumer safety regulation. Oxford University Press: New York.

Balci-Sinha, Rana and Kristen Talcott. CPSC Memorandum: “Human Factors Assessment of the Clothing Storage Unit (CSU) Incidents, Research, and Child Physical and Behavioral Characteristics for Developing Recommendations for the Proposed Rule,” Consumer Product Safety Commission, (2021).

Bhattachara, S., Lawrence, B., Miller, T.R, Zaloshnja, E., Jones, P.R., 2012. Ratios for Computing Medically Treated Injury Incidence and Its Standard Error from NEISS Data (Contract CPSC-D-05-0006, Task Order 8). Calverton, MD: Pacific Institute for Research and Evaluation, (Aug 2012).

CPSC, 2000. The National Electronic Injury Surveillance System: A tool for researchers. Bethesda, MD: U.S. Consumer product Safety Commission. Available at: https://www.cpsc.gov/s3fs-public/pdfs/blk_media_2000d015.pdf

Fors Marsh Group, Consumer Product Safety Commission (CPSC): Furniture Tip-Over Report, March 13, 2020.

Gold, Marthe R., Siegel, Joanna E., Russell, Louise B., Weinstein, Milton C., 1996. Cost-effectiveness in health and medicine. New York: Oxford University Press.

Haddix, Anne C., Teutsch, Steven M., Corso, Phaedra S., 2003. Prevention effectiveness: A guide to decision and economic evaluation (2nd ed.). New York: Oxford University Press.

Industrial Economics, Inc. (January 2018), "Valuing Reductions in Fatal Risks to Children," Final Contractor Report to the Consumer Product Safety Commission, Directorate for Economic Analysis. Prepared by William Raich and Jennifer Baxter (Industrial Economics) and Lisa A. Robinson and James K. Hammitt (Harvard University, Center for Health Decision Sciences and Center for Risk Analysis.

Industrial Economics, Inc. (March 2019), Memorandum to Charles Smith, et. al., Consumer Product Safety Commission, "Final Clothing Storage Units (CSUs) Market Research Report".

Industrial Economics, Inc. (June 2019, Memorandum to Charles Smith, et. al. Consumer Product Safety Commission, Directorate for Economic Analysis, "Final Clothing Storage Units (CSUs) Cost Impact Analysis."

Jenkins, Jill L., Rodgers, Gregory B., 2020. Combining measures of risk exposure with injury incidence estimates to estimate nursery product injury rates, Journal of Safety Research, 72, 43-46.

Kahane, C.J. 1994. Correlation of NCAP Performance with Fatality Risk in Actual Head-On Collisions. National Highway Traffic Safety Administration Report (1994). (Available at https://crashstats.nhtsa.dot.gov/Api/Public/ViewPublication/808061.)

Kallan, Michael J. and Jessica Steps Jerakia. SUV Rollover Vehicle Crashes and the Influence of ESC and SSF, 52nd AAAM Annual Conference, Annals of Advances in Automotive Medicine, October 2008.

Lahr, M.L., Gordon, B.B., 1980. Product life model feasibility and development study. Contract CPSC-C-79-009, Task 6, Subtasks 6.01-6.06). Columbus, OH: Battelle Laboratories.

Lawrence, BA, Miller, TR, Waejrer, GM, Spicer, RS, Cohen, MA, Zamula, WW, 2018. The Consumer Product Safety Commission's Revised Injury Cost Model. Maryland: Pacific Institute for Research and Evaluation (PIRE). (February 2018). Available at:

https://www.cpsc.gov/s3fs-public/ICM-2018-Documentation.pdf?YWuW4Jn0eb2hExeA0z68B64cv6LlUYoE

Lee, Arthur and Volanth, Casey, 2015, TVS - TIPPING THE SCALE TO SAFETY A look into falling TV dynamics and incidents, 2015 Directorate for Engineering Sciences U.S. Consumer Product Safety Commission, Rockville, Maryland (January 26, 2015). Available at https://cpsc.gov/s3fs-public/pdfs/TV-hazard-report-January2015.pdf.

Mella, Lawrence, Andrew Newens, Daniel Taxier, (2021) CPSC Memorandum to Kristen Talcott, "Mechanical Evaluation and Analytical Modeling of Incident-Involved Clothing Storage Units, Consumer Product Safety Commission, Bethesda, MD.

Miller et al., 2000. The Consumer Product Safety Commission revised injury cost model. Calverton, MD: Public Services Research Institute. Available at https://www.cpsc.gov/s3fs-public/pdfs/Revised-Injury-Cost-Model-120100.pdf

Nesteruk, Hope E J., "Recommendation for Clothing Storage Furniture Hang Tag Providing Tip-Over Resistance to Consumers," U.S. Consumer Product Safety Commission, Bethesda, MD (2021).

Neumann, Peter J., Sanders, Gillian D., Russell, Louise B., Siegel, Joanna E., Ganiats, Theodore G., 2016. Cost-effectiveness in health and medicine: Second Edition. New York: Oxford University Press.

OMB, 1993. Executive Order 12866 of September 10, 1993: regulatory planning and review, Federal Register 58(90), 51735-51744. Available at: http://www.archives.gov/federal-register/executive-orders/pdf/12866.pdf

OMB, 2003. Circular A-4: Regulatory analysis. Washington, DC: Office of Management and Budget. Available at: https://www.transportation.gov/sites/dot.gov/files/docs/OMB%20Circular%20No.%20A-4.pdf

Rice, Dorothy P., MacKenzie, Ellen J., and Associates, 1989. Cost of injury in the United States: A report to Congress. San Francisco, CA: Institute for Health & Aging, University of California and Injury Prevention Center, The Johns Hopkins University.

Rodgers, Gregory B., 1993. Estimating jury compensation for pain and suffering in product liability cases involving nonfatal personal injury. Journal of Forensic Economics 6(3), 251-262.

Rodgers, Gregory B., Garland, Sarah E., 2016. An economic analysis of requirements to prevent handheld hair dryer immersion electrocutions in the USA. Journal of Consumer Policy, 39, 223-240.

Rodgers, Gregory B., Rubin, Paul H., 1989. Cost-benefit analysis of all-terrain vehicles at the CPSC. Risk Analysis, 9(1), 63-69.

Sanborn, Maxwell, 2021. CPSC Memorandum: FY18 Midyear Clothing Storage Unit Testing Program Summary, Consumer Product Safety Commission, Bethesda, MD.

Schroeder, Tom, and Ault, Kimberly, 2001. The NEISS sample (design and implementation) 1997 to present. Bethesda, MD: U.S. Consumer product Safety Commission. Available at: http://www.cpsc.gov//PageFiles/106617/2001d011-6b6.pdf

Smith, Charles (2010). CPSC Memorandum to Ian Hall, "CRT Televisions: Information on Unit Sales and Number in Use," July 2, 2010.

Smith, Charles, Draft Proposed Rule Establishing a Safety Standard for Portable Generators: Preliminary Regulatory Analysis, U.S. Consumer Product Safety Commission, Bethesda, MD, September 2016. (TAB L in the NPR briefing package.)

Smith, Timothy P., 2016. Human factors assessment of blade-contact scenarios and responses to ANPR public comments (Tab D). Bethesda, MD: U.S. Consumer Product Safety Commission (November 15).

Taxier, D. (April 2021). Staff Analysis Report: Mechanical evaluation of clothing storage unit (CSU) tip-over research, incidents, and design solutions, contributing to proposed rule for CSU inherent stability. Directorate for Engineering Sciences, Division of Mechanical Engineering (ESMC), CPSC. Bethesda, MD. (TAB C in the NPR briefing package)

Tohamy, Soumaya M., 2006. Final regulatory analysis of staff's draft final standard to address open-flame ignitions of mattress sets. (January 10, 2006). Bethesda, MD: U.S. Consumer Product Safety Commission.

Viscusi, W. Kip, 1988. The determinants of the disposition of product liability cases: Systematic compensation or capricious awards? International Review of Law and Economics, 8, 203-220.

Viscusi, W. Kip, Harrington, Joseph E., Vernon, John M., 2005. Economics of regulation and antitrust, 4th Edition. Cambridge, MA: MIT press.

This page intentionally left blank.

Appendix A: ICM Nonfatal Injury Cost

Table A-1. Nonfatal Injury Costs Associated with CSU Tip-Overs to Children (2007–2021).

Place of Treatment	National Estimate	Medical Cost	Work Loss	Pain and Suffering	Average Total Cost	Total Cost
Doctor / Clinic	58,351	$713	$1,723	$13,649	$16,085	$938,565,354
Emergency Department	42,208	$3,114	$1,932	$31,159	$36,206	$1,528,176,832
Hospital-Adm Direct	621	$41,844	$156,366	$231,811	$430,020	$267,210,226
Hospital-Adm via ED	1,822	$45,363	$171,478	$261,418	$478,259	$871,431,766
AVERAGE		$2,735	$5,745	$26,524	$35,003	
TOTAL	103,003	$281,685,421	$591,736,042	$2,731,962,713		$3,605,384,177

Source: CPSC Injury Cost Model and NEISS cases involving CSU tip over for the years 2007 through 2021

Table A-2. Nonfatal Injury Costs Associated with CSU Tip-Overs to Adults (2007–2021).

Place of Treatment	National Estimate	Medical Cost	Work Loss	Pain and Suffering	Average Total Cost	Total Cost
Doctor / Clinic	50,119	$873	$2,934	$13,829	$17,636	$883,918,402
Emergency Department	21,520	$2,545	$2,900	$21,277	$26,722	$575,062,971
Hospital-Adm Direct	525	$63,953	$83,100	$227,134	$374,188	$196,620,581
Hospital-Adm via ED	1,650	$62,842	$84,654	$229,711	$377,207	$622,202,611
AVERAGE		$3,194	$5,321	$22,344	$30,859	.
TOTAL	73,814	$235,756,015	$392,783,529	$1,649,265,021	.	$2,277,804,565

Source: CPSC Injury Cost Model and NEISS cases involving CSU tip over for the years 2015 through 2019

This page intentionally left blank.

Appendix B: Proposed Modifications for Assessed CSUs

Table B-1. Summary of Modifications and Partial Costs

CSU-Description	Option	Maximum Number of Open Drawers	Decrease Drawer Extension (inches)	Foot Extension (inches)	Front Raised (inches)	Counter Weight (pounds)	Comments
Example 1: RTA, 8-drawer dresser	I	1 drawer	---	---	0.485	---	Multiple interlock mechanisms or a newly designed one would likely be required. Raising the front of the CSU by almost half an inch will probably cause other changes with significant costs.
	II	2 drawers	0.5	---	.75	5	Multiple interlock mechanisms or a newly designed one would likely be required. Raising the front of the CSU by ¾ of an inch will probably cause other changes with significant costs. Decrease in drawer extensions could reduce utility.
	III	2 drawers	---	1	0.5	---	Multiple interlock mechanisms or

CSU-Description	Option	Maximum Number of Open Drawers	Decrease Drawer Extension (inches)	Foot Extension (inches)	Front Raised (inches)	Counter Weight (pounds)	Comments
							a newly designed one would likely be required. Raising the front of the CSU by ½ of an inch will probably cause other changes with significant costs.
	IV	2 drawers	0.5	1	0.5	---	Multiple interlock mechanisms or a newly designed one would likely be required. Raising the front of the CSU by ½ of an inch will probably cause other changes with significant costs. Decrease in drawer extensions could reduce utility.
	V	---	1.5	1.7	1	20	Decrease in drawer extension could reduce utility. Raising the front of the CSU by 1 inch will probably require other changes with costs not quantified here.

CSU-Description	Option	Maximum Number of Open Drawers	Decrease Drawer Extension (inches)	Foot Extension (inches)	Front Raised (inches)	Counter Weight (pounds)	Comments
Ex 2, 5-drawer chest of drawers	I	1 drawer	4.13	1.375	---	3	Decreasing the drawer extension by 4.13 inches could reduce utility.
	II	1 drawer	1	1.5	---	35	Unknown utility cost from reduced drawer extension
	III	1 drawer	---	2	---	40	Increases weight by 27 percent
	IV	1 drawer	2	---	---	60	Decrease in drawer extension could reduce utility. Increases weight by 40%.
	V		2	2		51	Decrease in drawer extension could reduce utility. Increases weight by 33%.
Ex. 3, 7-drawer dresser, pre-assembled	I	1 drawer	----	----	----	5	Multiple interlock mechanisms or a newly designed one would likely be required.
	II	2 drawers	---	---	---	10	Multiple interlock mechanisms or a newly designed one would likely be required.
	III	3 drawers		1	---	5	Might be the only option with an existing type of

CSU-Description	Option	Maximum Number of Open Drawers	Decrease Drawer Extension (inches)	Foot Extension (inches)	Front Raised (inches)	Counter Weight (pounds)	Comments
							interlock mechanism
	IV	1 drawer	1	1	---	0	Multiple interlock mechanisms or a newly designed one would likely be required.
Ex. 4, (same as Ex 3 but 29 pounds heavier)	I	3 drawers					
	II	---	1	---	---	24	Unknown utility loss from reduced drawer extension. Impact of raising weight from 195 to 219 unknown.
	III	---	---	1	---	20	In addition to raising the front of the CSU, increased weight by 20 pounds might reduce utility by some unknown amount.
	IV	---	---		---	35	Increasing the weight by 35 pounds could have a negative impact on the consumer.
Ex. 5, RTA 3-drawer chest of drawers	1	1 drawer	---	6.6	---	----	A 6.6 inch foot extension might not be acceptable to consumers. It could also create a tripping hazard.

CSU-Description	Option	Maximum Number of Open Drawers	Decrease Drawer Extension (inches)	Foot Extension (inches)	Front Raised (inches)	Counter Weight (pounds)	Comments
	2	1 drawer		6.25		1.5	A 6.25 inch foot extension might not be acceptable to consumers and could create a tripping hazard.
	3	1 drawer				50	Increases weight of model by more than 100%.
	4	1 drawer	1	2.25	0.37	25	Increases weight of model by more than 50%.

This page intentionally left blank.

Tab I: Final Regulatory Flexibility Analysis

This page intentionally left blank.

United States
Consumer Product Safety Commission

Memorandum

TO: Kristen Talcott, Project Manager,
Division of Human Factors,
Directorate for Engineering Sciences

DATE: September 28, 2022

THROUGH: Alexander P. Moscoso, Associate Executive Director,
Directorate for Economic Analysis

Jose E. Tejeda, Division Director for Economic Analysis,
Directorate for Economic Analysis

FROM: Charles L. Smith, Economist,
Directorate for Economic Analysis

Susan Proper, Economist,
Directorate for Economic Analysis

SUBJECT: Final Regulatory Flexibility Analysis of Draft Final Rule for Clothing Storage Units

---

Introduction

On February 3, 2022, the Commission published a notice of proposed rulemaking (NPR) in the *Federal Register* (87 Fed. Reg. 6246), concerning the risk of injuries and deaths associated with clothing storage units (CSUs) tipping over.

Before a final rule is issued, Section 604 of the Regulatory Flexibility Act (5 U.S.C. § 604) requires the Commission to prepare a Final Regulatory Flexibility Analysis (FRFA), describing the expected impact of the rule on small entities and identifying efforts by the Commission to reduce those impacts.

As specified in the Regulatory Flexibility Act, the FRFA must contain:

1. a statement of the need for, and objectives of, the rule;
2. a statement of the significant issues raised by the public comments in response to the initial regulatory flexibility analysis (IRFA), a statement of the assessment of the agency of such issues, and a statement of any changes made in the proposed rule as a result of such comments;
3. the response of the agency to any comments filed by the Chief Counsel for Advocacy of the Small Business Administration (Advocacy) in response to the proposed rule, and a detailed statement of any change made to the proposed rule in the final rule as a result of the comments;

U.S. Consumer Product Safety Commission
4330 East-West Highway
Bethesda, MD 20814
cpsc.gov

National Product Testing & Evaluation Center
5 Research Place
Rockville, MD 20850

4. a description of and an estimate of the number of small entities to which the rule will apply or an explanation of why no such estimate is available;
5. a description of the projected reporting, recordkeeping, and other compliance requirements of the rule, including an estimate of the classes of small entities which will be subject to the requirement and the type of professional skills necessary for preparation of the report or record; and
6. a description of the steps the agency has taken to minimize the significant economic impact on small entities consistent with the stated objectives of applicable statutes, including a statement of the factual, policy, and legal reasons for selecting the alternative adopted in the final rule and why each one of the other significant alternatives to the rule considered by the agency which affect the impact on small entities was rejected.

Discussion

(1) A statement of the need for, and objectives of, the rule.

The draft final rule would establish mandatory performance requirements for CSUs.

The purpose of the draft final rule is to reduce the risks of death and serious injury from tip over of CSUs. The rule would require CSUs to be tested for stability, exceed minimum stability requirements, be marked or labeled with safety information, and bear a hang tag providing performance and technical data about the stability of the CSU. Manufacturers of CSUs would be required to test CSUs for compliance with the stability requirements, and provide the required labeling and hang tag.

(2) A statement of the significant issues raised by the public comments in response to the initial regulatory flexibility analysis, a statement of the assessment of the agency of such issues, and a statement of any changes made in the proposed rule as a result of such comments.

CPSC received comments on the substantive requirements in the proposed rule. A summary of those comments, CPSC staff's assessment of them, and changes recommended for the draft final rule as a result of comments, are discussed in Tab K of this briefing package. CPSC also received comments on the costs and benefits calculations presented in the preliminary regulatory analysis and IRFA, the cost and benefit impacts of the scope and effective date of the proposed rule, and other possible economic impacts of the rule, including economic impacts on firms, the utility of the product for consumers, hazard costs associated with the product, and alternative actions that the Commission could take. These comments and staff's responses are also discussed in Tab K.

Following is a summary of the recommended changes to the draft final rule, based on comments relevant to economic considerations. Consideration of some of the comments led

staff to recommend that the draft final rule have an effective date that is 180 days following publication of the final rule. Also, comments regarding lightweight CSUs led staff to recommend excluding units from the scope of the rule if the combined weight of the CSU and the contents of filled drawers is less than 57 pounds. Both of these changes should reduce the costs associated with compliance with the rule for businesses of all sizes. The change in the effective date will give businesses more time to manufacture or import CSUs that are compliant with the rule. The exclusion of lightweight units from the scope of the rule means that manufacturers of those units, which represent about 10 percent of U.S. annual sales of CSUs by number of units, will not need to test for compliance with this rule, or provide a certificate of compliance with this rule. Staff made other clarifying changes on scope and test methods that should make it more clear how companies of all sizes must comply with the rule, but that should not impact either costs or benefits.

(3) The response of the agency to any comments filed by the Chief Counsel for Advocacy of the Small Business Administration in response to the proposed rule, and a detailed statement of any change made to the proposed rule in the final rule as a result of the comments.

Advocacy filed comments on the proposed rule. Advocacy commented: "CPSC should consider reasonable alternatives to the proposed rule that would ease the burden on small businesses while still meeting the Commission's stated objectives" and described specific issues and concerns raised by small businesses, including manufacturers, importers, and retailers. Alternatives to the proposed rule, and their expected impact on small businesses, were discussed in the IRFA and Preliminary Regulatory Analysis that accompanied the NPR, and also discussed in section (6) of this FRFA. Staff responded to specific issues raised by Advocacy, and changes made in response to those comments, below.

Comment: Advocacy stated: "CPSC's Initial Regulatory Flexibility Act analysis underestimates the impact the proposed rule will have on small businesses." Advocacy also noted that almost all of the industry is small businesses, adding: "One small importer estimated that additional packing materials and costs plus the increased shipping weight will drive up per unit costs by 44 percent. This does not include costs to test the CSUs or ship them to third parties for testing, nor does it include the cost increases this importer's suppliers will incur in the manufacturing process. Other small manufacturers and importers reported similar estimates of the impacts of the proposed rule, stating that the costs will increase approximately 30-40 percent. These small businesses report that an increase of this magnitude will put many of them out of business." Advocacy also expressed concern that the rule would impact small retailers, because the compliant CSUs would be so heavy the units would injure the delivery drivers.

Response: The Final Regulatory Analysis in Tab H of this briefing package has been revised to reflect these and other commenters' input on costs of compliance. This rule does not require third party testing, except for CSUs that are children's products, which are already subject to third party testing requirements. In addition, the assumptions of higher costs by Advocacy and

others were based on increased costs for shipping and packaging, assuming that compliance with the performance standard is achieved by adding weight to the CSU, which is not required by the draft final rule. The regulation is a performance standard, not a design standard; and as discussed in the Final Regulatory Analysis, there are multiple ways to comply with the draft final rule that may not involve adding weight to the unit. Suppliers can select the lowest-cost option to achieve compliance, which, in some cases, will likely be interlock hardware or foot extensions that add minimal weight to the unit, or one of those options in combination with added weight. Thus, there are many options to achieve compliance where shipping and packaging cost increases could be minimal, if any. Additionally, SBA did not provide data to demonstrate these costs of compliance would disproportionately affect small businesses.

Advocacy provided an estimate of the total cost to small businesses of 30 percent to 40 percent above current costs, but it did not provide any specific breakdown of increased costs to small manufacturers or importers from components, redesign, packaging, and shipping. This estimate is on the high end of the range of estimates provided by other commenters, primarily trade associations and large businesses, that did provide a breakout of increased costs for components, redesign, shipping, and packaging.

Larger businesses and trade associations that provided comments generally assumed that wholesale prices would rise to cover costs of compliance, and they also assumed that retail prices would rise to cover all or nearly all of the increased cost to manufacturers and importers. It is unlikely, given that large suppliers apparently plan to raise prices to cover the cost of compliance, that small suppliers would not be able to pass any of the cost of regulatory compliance on to retail customers, as is implied by Advocacy's comments. That would only occur if demand were highly elastic (any price increase would cause demand to drop sharply), so suppliers are unable to pass any of the cost of compliance on to retail consumers. We assume in the Final Regulatory Analysis that demand is somewhat elastic, so that both small and large suppliers will be able to cover some or all of the compliance costs of the rule, by raising wholesale prices, which, in turn, will result in higher retail prices. In the deadweight loss analysis portion of the Final Regulatory Analysis, staff discuss that some manufacturers may exit the market, because their increased marginal costs will exceed the price consumers are willing to pay for their product.

An industry trade association commenter noted that more than 90 percent of CSUs sold in the United States are imported. This means that very few U.S. manufacturers will directly bear the cost of redesign or testing, which, instead, will fall on foreign manufacturers. Small importers will be able to choose a compliant foreign supplier for their products, rather than incur the cost of redesign themselves, although the cost of compliance will likely be reflected in the wholesale cost. The economies of scale for larger manufacturers, as compared to small manufacturers, may not be an issue in a U.S. industry that is primarily importers, not manufacturers.

On specifics of shipping costs, the updated staff analysis in the Final Regulatory Analysis (Tab H) includes an estimate of shipping furniture with added weight for an average of 16 cents per additional pound, which is highly unlikely to add 30 percent to the cost of a unit, given the

average retail price of a CSU is estimated to be $338.50. Again, adding weight to the unit is not required by the draft final rule, and suppliers are free to choose a different compliance method that does not add significant weight to the unit, such as drawer interlocks or foot extensions. The Preliminary Regulatory Analysis that accompanied the proposed rule estimated the cost of added weight at 24 cents per pound, based on the retail price of medium density fiberboard (MDF); manufacturers would likely pay far less for MDF. The Preliminary Regulatory Analysis used the retail price as a conservative estimate of the cost of added weight, in part because the retail price included the price of shipping the MDF to the customer. We did not receive any comments that the MDF price estimate in the Preliminary Regulatory Analysis that included the cost of shipping MDF to the consumer point of purchase was inaccurate.

On the issue of economies of scale for any specific technology for compliance, while it is possible that large manufacturers would have a lower cost per unit for the components, due to economies of scale, no small manufacturers provided specific price data on this issue. Again, an industry trade association noted that nearly all (more than 90%) of the CSUs sold in the United States are imported, so it will largely be foreign manufacturers who decide the best way to achieve compliance with the standard in the most cost-effective way.

Comment: Advocacy stated: "CPSC should consider a later effective date for the rulemaking, and in the interim require small businesses to educate and assist consumers with existing product safety options." They also stated: "small businesses will not have enough time to redesign their products to comply with the proposed requirements. Small businesses that import products will incur additional difficulties due to existing supply chain disruptions, as well as normal lead times required for some of these products."

Response: Other commenters representing large businesses and trade associations had similar comments about the burden of the effective date. In response to these comments, staff recommends an effective date that is 180 days after the publication of the rule, rather than 30 days after, as proposed in the NPR. Staff also recommends that the effective date apply to the date of manufacture, rather than manufacture OR import, which addresses concerns from commenters regarding the status of items manufactured in foreign countries before the effective date of the rule, but still in transport when the rule becomes effective. By making the effective date apply to the date of manufacture, such items manufactured in foreign countries before the effective date that do not comply with the rule could still legally be imported and sold.

However, Advocacy provided no data about why small businesses would find the effective date a greater burden than larger businesses. Given that most CSUs are imported, not manufactured domestically, it is unclear whether small importers would find the effective date more burdensome than large importers. In fact, the rule's effective date may temporarily disproportionally benefit U.S. manufacturers, including small manufacturers, who will have shorter shipping times for units manufactured in the United States than importers of any size.

Comment: Advocacy commented: "CPSC should reconsider its two proposed testing methods, as they produce different results that may be confusing for consumers and small businesses alike."

Response: Other commenters representing large businesses and trade associations had similar comments. In the draft final rule, staff clarified that only one of the test methods should apply to any given CSU. These comments and staff's analysis and recommended revisions are discussed in detail in Tabs D and K of this briefing package.

Comment: Advocacy commented: "CPSC should consider updating existing voluntary standards if it is appropriate to do so." They also noted: "Updating existing standards will ensure that industry has a voice in the process, which may help in minimizing the impacts to small businesses."

Response: Other commenters representing large businesses and trade associations had similar comments favoring the alternative of voluntary standards. Advocacy did not provide data or any detailed information that would lead staff to conclude that adopting the voluntary standard would minimize the impacts on small businesses, or provide adequate levels of safety for consumers. As explained in detail in Tab F of this briefing package, the current voluntary standard, ASTM F2057 – 19, does not adequately reduce the risk of injury associated with CSU tip overs because it does not address the multiple factors demonstrated to contribute to instability and that exist in incidents (*i.e.*, the effect of carpet, multiple open and filled drawers, and dynamic forces generated by common interactions). In addition, staff found that many specific CSU models involved in injuries and fatalities during tip-over incidents would meet the current ASTM standard, thus demonstrating that the current standard is not adequate to address the hazard. CPSC staff worked closely with ASTM to update ASTM F2057 – 19, and ASTM has balloted revisions to the standard. However, as summarized in Tab F (see Appendix F2 for CPSC's statements for Negative Ballot Votes), staff considers several balloted items inadequate to reduce the risk of injury and therefore has submitted negative votes on several items. Moreover, ASTM has worked on updating its standard for several years and has not succeeded in doing so. Therefore, staff does not recommend waiting for ASTM possibly to update the standard, rather than issue a final rule now to address the hazard. Finally, a voluntary standard does not require compliance. Therefore, for a voluntary standard to be effective at reducing the hazard, it would need to be both effective *and* have a high level of compliance. Thus, even if ASTM were to develop an effective standard, the level of compliance would be relevant to whether it would be as effective as the mandatory draft final rule.

Comment: Advocacy commented: "CPSC should clarify that once a product has been tested and certified, small importers and retailers may rely on that certification without incurring additional testing costs."

Response: Please see 16 CFR PART 1109 - CONDITIONS AND REQUIREMENTS FOR RELYING ON COMPONENT PART TESTING OR CERTIFICATION, OR ANOTHER PARTY'S FINISHED PRODUCT TESTING OR CERTIFICATION, TO MEET TESTING AND CERTIFICATION REQUIREMENTS and 16 CFR PART 1110 CERTIFICATES OF COMPLIANCE. Once a product has been tested and certified, importers and retailers of any size may rely on the certificate of compliance as evidence that the product has met the testing and certification requirements. This applies to both children's products (for which 16 CFR part

1109 applies) and general use products (for which 16 CFR part 1110 applies). These CPSC regulations apply to many products, and are not new or specific to clothing storage units.

(4) A description of and an estimate of the number of small entities to which the rule will apply or an explanation of why no such estimate is available.

The draft final rule would affect firms or individuals that manufacture or import CSUs that fall within the scope of the rule. Therefore, the draft final rule would apply to small entities that manufacture or import CSUs. As discussed in the IRFA that accompanied the NPR, manufacturers of CSUs are principally classified in the North American Industrial Classification (NAICS) category 337122 (non-upholstered wood household furniture manufacturing), but may also be categorized in NAICS codes 337121 (upholstered household furniture manufacturing), 337124 (metal household furniture manufacturing), or 337125 (household furniture (except wood and metal) manufacturing). According to data from the U.S. Census Bureau, in 2019, there were a total of 3,303 firms classified in these four furniture categories. Of these firms, 1,992 were primarily categorized in the non-upholstered wood furniture category. More than 99 percent of the firms primarily categorized as manufacturers of non-upholstered wood furniture would be considered to be small businesses, as were 97 percent of firms in the other furniture categories, according to the SBA size standards (Small Business Administration, 2016). We note that these categories are broad and include manufacturers of other types of furniture, such as tables, chairs, bed frames, and sofas. It is also likely that not all the firms in these categories manufacture CSUs. Production methods and efficiencies vary among manufacturers; some make use of mass production techniques, and others manufacture their products one at a time, or on a custom-order basis.

The number of U.S. firms that are primarily classified as manufacturers of non-upholstered wood household furniture has declined over the last few decades, as retailers have turned to international sources of CSUs and other wood furniture. Additionally, firms that formerly produced all of their CSUs domestically, have shifted production to foreign plants.

Sixty-seven percent of the value of apparent consumption of non-upholstered wood furniture (net imports plus domestic production for the U.S. market) in 2020 was comprised of imported furniture, and the share held by imports has grown in recent years (up from 56% in 2017). Although CSUs are not reported as a separate category by the U.S. Department of Commerce, an even greater proportion of CSUs purchased by U.S. consumers could be imported. An industry trade association commented on the proposed rule, noting that more than 90 percent of CSUs sold in the United States are imported products. Firms that import CSUs would also be impacted by the draft final rule, because imported CSUs would have to comply with the standards; although, as noted above in the response to Advocacy comments, importers may rely on a certificate of compliance from the foreign manufacturer.

The draft final rule would apply to products manufactured after the effective date of the rule. As such, the rule would not directly apply to retailers, unless they are also manufacturers or importers. However, because retailers may be indirectly affected by changes made by

manufacturers or importers, staff also considered the effects of the rule on retailers in the IRFA. Under the NAICS classification system, importers are classified as either wholesalers or retailers. Furniture wholesalers are classified in NAICS category 423210 (Furniture Merchant Wholesalers). According to the Census Bureau data, in 2019, there were 4,824 firms involved in household furniture importation and distribution. A total of 4,609 of these wholesalers (or 96 percent) are classified as small businesses because they employ fewer than 100 employees (which is the SBA size standard for NAICS category 423210). Furniture retailers are classified in NAICS category 442110 (Furniture Stores). According to the Census Bureau, there were 13,142 furniture retailers in 2019. The SBA considers furniture retailers to be small businesses if their gross revenue is less than $20.5 million. Using these criteria, at least 97 percent of the furniture retailers are small (based on revenue data from the 2012 Economic Census of the United States). Wholesalers and retailers may obtain their products from domestic sources or import them from foreign manufacturers. Retailers would be indirectly impacted by this rule only to the extent that they would need to buy compliant units from manufacturers or importers. Retailers can increase the retail price of units to reflect any increase in their wholesale costs and to maintain their profit margin. However, given that demand is responsive to price (somewhat elastic), it is indeed possible that retailers will see lower sales of CSUs. Given that most furniture stores sell a wide mix of furniture and accessory products, it is unlikely that any indirect impact of this rule on small retailers would be substantial (more than 1% of annual revenue).

(5) Projected reporting, recordkeeping, and other compliance requirements of the draft final rule.

The draft final rule would establish a mandatory standard that all CSUs would have to meet in order to be sold in the United States. As discussed above, most of the entities to which the rule would apply are small businesses. No specialized professional skills or training are needed for the preparation of the record of compliance. CPSC's public website provides guidance on how to create a certificate of compliance, and an example one-page certificate. See https://www.cpsc.gov/Business--Manufacturing/Testing-Certification/General-Certificate-of-Conformity-GCC. CSU suppliers already would have had to provide such a general certificate of compliance for other applicable CPSC regulations like lead in paint, so this rule should not require any new skills or training for certificates of compliance. The compliance testing requirements are described in detail in the draft final rule itself, and many suppliers are already performing similar tests to demonstrate compliance with the voluntary standard. Third party testing is not required, except for CSUs that are also children's products. The text and graphics for the required labels and hang tags are provided in the rule, so a graphics designer will not be required to make the labels and hang tags.

Because the hang tag requirement is being promulgated under section 27(e) of the CPSA, a regulatory analysis or regulatory flexibility analysis is not required. However, the cost of hang tags will be about 10 cents for materials, and less than a minute of labor to attach to the unit.

As noted earlier, the labeling or marking of the unit should have similarly minor costs for manufacturing.

In brief, the provisions of the draft standard include the following requirements:

Stability testing. CSUs must be tested for stability using test procedures that are intended to reflect real-world conditions that contribute to instability and are reflected in incident data, including carpeting and multiple open and filled drawers. (See regulatory text and Tab D of this briefing package for full details of the requirements of the test procedures.) Stability testing includes the application of a force to simulate the effect of dynamic interactions that contribute to instability and are demonstrated in incident data.

Labeling. The draft final rule includes specific requirements for placement, content, symbols, and format of a warning label to inform consumers of the hazard. Tab C of this briefing package details these requirements.

Performance and Technical Data. The draft final rule also includes a requirement, under section 27(e) of the CPSA, to provide comparative technical information about the tip rating of each CSU at the time of original purchase, so consumers can make informed buying decisions and compare the stability ratings of products. The information is to be provided in the form of a hang tag. There is a required minimum tip rating. A detailed discussion of this requirement is in Tab E of this briefing package.

Stockpiling. The draft final rule would prohibit any person from manufacturing or importing noncomplying CSUs in any 1-month period between the date of promulgation of the final rule and the effective date, at a rate that is greater than 105 percent of the rate at which they manufactured CSUs during the base period for the manufacturer. The base period is the calendar month with the median manufacturing volume within the last 13 months immediately preceding the month of promulgation of the final rule. Thus, the stockpiling limit would allow manufacturers and importers to meet any foreseeable increase in the demand for CSUs, without allowing large quantities of CSUs to be stockpiled. Retailers do not have any specific compliance requirements under this rule, and therefore, they can sell units manufactured prior to the effective date of the rule, so long as those units were not manufactured or imported in violation of the stockpiling requirements.

Certification. Section 14(a)(1) of the CPSA requires manufacturers, importers, or private labelers of a consumer product (that is not a children's product) subject to a consumer product safety rule to certify, based on a test of each product or a reasonable testing program, that the product complies with all rules, bans or standards applicable to the product. The draft final rule specifies the procedure used to determine whether a CSU complies with those requirements. For those products that manufacturers certify based on a test of each product or a reasonable testing program, manufacturers would issue a general certificate of conformity (GCC). Section 14(a)(2) of the CPSA requires manufacturers, importers, or private labelers of any product subject to a children's product safety rule to submit sufficient samples of the children's product, or samples that are identical in all material respects to the product to a CPSC-accepted third

party conformity body for testing. Based on passing test results from the CPSC-accepted third party conformity body, the manufacturer, importer, or private labeler issues a Children's Product Certificate (CPC) indicating the children's product is compliant with the children's product safety rule.

Both GCCs and CPCs are required to meet certain requirements for certificates. Among the other requirements, each certificate must identify the manufacturer or private labeler issuing the certificate, and any third party conformity assessment body that performed the testing on which the certificate depends, the date and place of manufacture, the date and place where the product was tested, each party's name, full mailing address, telephone number, and contact information for the individual responsible for maintaining records of test results. The certificates must be in English. The certificates must be furnished to each distributor or retailer of the product and to the CPSC, if requested.

(6) A description of the steps the agency has taken to minimize the significant economic impact on small entities consistent with the stated objectives of applicable statutes, including a statement of the factual, policy, and legal reasons for selecting the alternative adopted in the final rule and why each one of the other significant alternatives to the rule considered by the agency which affect the impact on small entities was rejected.

As discussed in the analysis above, most domestic firms that are expected to manufacture or import CSUs subject to the final rule are small businesses. Therefore, an exemption for small manufacturers/importers is not a feasible alternative. CPSC staff considered several other alternatives that could reduce the impact of a rule on small businesses. These alternatives are discussed below.

In the IRFA, staff considered whether the Commission could rely on the current voluntary standard, ASTM F2057 – 19. Staff concluded that ASTM F2057 – 19 does not adequately protect children from CSU tip-overs for several reasons: it does not consider the dynamic loading that can occur when a child interacts with a CSU; it does not consider filled drawers; it does not consider carpeting; and it does not account for the combination of multiple factors that can coexist that contribute to instability, such as multiple open, filled drawers, and children climbing. Also, there were multiple incidents in the injury and fatality data involving CSUs that appear to be compliant with the ASTM standard.

Staff examined the following additional alternatives to the draft proposed rule that could reduce the economic impact of the rule on small businesses: (1) no regulatory action; (2) require a stability rating for CSUs, but not a minimum stability; (3) mandate a more rigorous standard (draft final rule, but addressing the climbing and pulling forces and moments of 60-lb children, instead of 51.2-lb children), (4) mandate ASTM F2057 – 19 but with a 60-pound test weight, (5) mandate potential new ASTM standard, and (6) later effective date. Staff assesses that the less stringent alternatives to promulgating the draft proposed rule (alternatives 1, 2, 4, 5, and 6) will not adequately reduce deaths and injuries from tip-over incidents involving CSUs. The more

stringent alternative (3) would provide only a limited increase in benefits, but a disproportionally higher level of costs than the draft proposed rule, so staff does not recommend this alternative. The analysis of these alternatives, as discussed in the IRFA that accompanied the proposed rule, have not changed. For the less stringent alternatives, the cost to businesses of all sizes would be less than the proposed rule, but the benefits would also be less.

In the draft final rule and Final Regulatory Analysis, staff also considered the alternative of requiring the current draft of the ASTM standard that has not yet completed balloting, which includes some of the requirements in this rule, such as the requirement to test with filled drawers. (See Tab F for more discussion of the draft standard.) Similar to the previous version of the ASTM standard, this would not address the known incidents and fatalities as well as this draft final rule, and thus, would cost almost as much to test, with far fewer benefits, than this draft final rule.

Conclusion

The results of this Final Regulatory Flexibility Analysis suggest that the draft final rule could have a significant adverse impact on some small manufacturers or importers of CSUs, at least during the 180 days when CSUs would need to be redesigned to meet the standard and tested to demonstrate compliance. The initial cost of compliance, including redesign and testing for compliance, could represent more than 1 percent of annual revenue (the typical threshold used to define a "significant" economic impact on small businesses) for some small manufacturers and importers, particularly manufacturers of low-volume units that could not spread the cost of redesign over thousands of units. The indirect impacts on small retailers are unlikely to exceed 1 percent of annual revenue. The initial and ongoing cost of testing to demonstrate compliance is less likely to be significant, except possibly for very small volume (less than 720 units per model) manufacturers. Possible alternatives to the draft final rule have been considered by staff and the Commission. All the less stringent alternatives could reduce the expected impact of the rule on small businesses; however, staff's assessment of these alternatives, with the exception of a longer effective date, finds that their adoption would not result in a rule that adequately addresses the risk of serious injury or death caused by CSU tip overs.

References

(SBA) (2016). *Table of Small Business Size Standards Matched to North American Industry Classification System Codes*. Retrieved from: http://www.sba.gov/sites/default/files/files/Size_Standards_Table.pdf.

This page intentionally left blank.

TAB J: Clothing Storage Units: Summary of Recalls from January 1, 2000–July 1, 2022

This page intentionally left blank.

United States
Consumer Product Safety Commission

Memorandum

TO: Kristen Talcott, Ph.D., Furniture Tip-Over Project Manager
Division Human Factors, Directorate for Engineering Sciences

DATE: September 28, 2022

THROUGH: Robert Kaye, Assistant Executive Director
Office of Compliance and Field Operations

Mary Murphy, Director
Division of Enforcement and Litigation,
Office of Compliance and Field Operations

Howard Tarnoff, Deputy Director
Division of Enforcement and Litigation,
Office of Compliance and Field Operations

FROM: Amelia Hairston-Porter, Trial Attorney
Division of Enforcement and Litigation,
Office of Compliance and Field Operations

Frederick Millett, Trial Attorney
Division of Enforcement and Litigation,
Office of Compliance and Field Operations

SUBJECT: Clothing Storage Units: Summary of Recalls from January 1, 2000 – July 1, 2022

Purpose

CPSC staff is submitting to the Commission a draft final rule for a mandatory standard regarding the stability of clothing storage units (CSUs). In support of the draft final rule, this memorandum summarizes Office of Compliance and Field Operations (Compliance) investigations and recalls of CSUs from January 1, 2000, through July 1, 2022. For the notice of proposed rulemaking (NPR), staff's analysis covered the period from January 1, 2000, through March 31, 2021.

Compliance Investigation Information

Compliance staff reviewed recalls of CSUs from January 1, 2000, through July 1, 2022. During that period, there were 43 consumer-level recalls conducted in response to tip-over hazards of CSUs involving 38 different firms. The recalled products were responsible for 341 tip-over

U.S. Consumer Product Safety Commission
4330 East-West Highway
Bethesda, MD 20814
cpsc.gov

National Product Testing & Evaluation Center
5 Research Place
Rockville, MD 20850

incidents, including reports of 152 injuries and 12 fatalities.[1] The 12 fatal incidents all involved children 3 years old or younger.[2] According to information reported to Compliance staff, including consumer reports, In-Depth Investigations (IDIs), Product Safety Assessments (PSAs), and reports by staff in the Office of Hazard Analysis and Reduction, the fatal incidents most likely occurred when the CSU tipped over as a result of a child climbing, getting inside drawers, or opening the drawers. Analysis by Health Sciences staff determined that, due to their small size and limited strength, children are often unable to self-rescue when entrapped beneath a CSU, and the weight or position of the CSU can quickly cause death from asphyxia, crush injuries, or blunt force trauma (Tab B, at 3-4).

Table 1 below lists the details of each recall. The most recent five recalls occurred after staff submitted the NPR briefing package for this rulemaking. All referenced CSUs were recalled for tip-over and entrapment hazards. The recalls affected approximately 21,530,000 CSUs in total. In addition, Compliance staff continues to monitor and investigate CSUs that may pose tip-over and entrapment hazards.

Table 1. Clothing Storage Unit Recalls Relating to Tip Over from January 1, 2000–July 1, 2022

Date	Firm	Incidents and Injuries[3]	# Recalled	Press Release #4
12/18/2001	Sandberg Manufacturer	1 incident, no injury	Unknown	02-069
1/30/2013	**Million Dollar Baby**	**2 incidents, including 2 deaths**	**18,000**	**13-106**
1/30/2013	**Gemme Juvenile**	**1 incident, including 1 death**	**Unknown**	**13-105**
6/9/2015	Pali Design	1 incident, no injury	18,000	15-160
5/20/2016	BESTAR	None reported in the U.S.[5], 1 injury in Canada	26	16-745
7/12/2016	Bernhardt	2 incidents, including 1 injury	1,700	16-222
8/16/2016	Sauder Woodworking	None Reported	8,000	16-767
1/11/2017	Linon Home	None Reported	200	17-725

[1] The remaining incidents did not result in injury or did not indicate whether an injury occurred.
[2] Recalled products that involved fatalities are presented in bold text in Table 1. Eleven of the 12 fatal incidents involving recalled products are in the data set analyzed for this briefing package (all involving children and CSUs without televisions); the remaining fatal incident occurred in 1989, which is outside the period analyzed in this briefing package.
[3] Includes incidents and injuries known to the CPSC at the time of the recall.
[4] Press releases can be found at: www.cpsc.gov/Recalls.
[5] Product was sold in the United States.

1/31/2017	South Shore	None Reported	3,500	17-731
1/31/2017	Simpli Home	None Reported	240	17-730
1/31/2017	Bolton Furniture	None Reported	1,000	17-075
4/4/2017	Safavieh	None Reported	500	17-737
4/10/2017	Vanguard Furniture	None Reported	170	17-738
6/28/2017	Homestar North America	None Reported	1,470	17-752
6/28/2017	South Shore Expanded Recall	None Reported	68,300	17-182
9/6/2017	Ameriwood Home	1 incident, including 1 injury	1.6 million	17-217
9/13/2017	Target	12 incidents, no injury	175,000	17-223
11/21/2017	**IKEA**	**299 incidents, including 8 deaths and 144 injuries**	**17.3 million**	**18-040**
5/9/2019	**South Shore**	**2 incidents, including 1 death and 1 injury**	**310,000**	**19-116**
8/28/2019	Kirkland's	None Reported	3,000	19-190
9/24/2019	Home Meridian	None Reported	640	19-209
10/3/2019	Ridgewood	None Reported	1 million	20-003
10/3/2019	E&E	None Reported	1,800	20-002
12/18/2019	Hillsdale	None Reported	31,000	20-041
2/26/2020	Home Depot	None Reported	200	20-079
2/26/2020	Safavieh	None Reported	760	20-078
3/4/2020	IKEA	6 incidents, including 2 injuries	820,000	20-085
3/12/2020	Homestar	None Reported	33,000	20-721
4/6/2020	Joybird	None Reported	100	20-106
5/6/2020	Prepac	None Reported	21,000	20-117
5/13/2020	Hodedah	None Reported	26,500	20-102
5/21/2020	Herman Miller	1 incident, no injury	2,700	20-747
6/18/2020	Modus	None Reported	1,300	20-752
8/11/2020	Transform	None Reported	19,900	20-161
11/4/2020	Walker Edison	None Reported	24,000	21-019
12/10/2020	Homfa	None Reported	6,375	21-714
1/7/2021	Noble House	None Reported	780	21-718
1/27/2021	CB2	10 incidents, no injuries	11,000	21-071
7/8/2021	Canyon Furniture	None Reported	1,200	21-761
7/22/2021	Bel Furniture, Inc.	1 incident, including 1 injury	90	21-764
10/27/2021	Magnussen Home	1 incident, including 1 injury	13,200	22-011

02/03/2022	BFG North Carolina	None Reported	1,380	22-719
06/23/2022	Samson International	1 incident, including 1 injury	5,400	22-755

Tab K: Notice of Proposed Rulemaking (NPR) Comments and Staff Response

This page intentionally left blank.

United States
Consumer Product Safety Commission

Memorandum

TO: The File

DATE: September 28, 2022

THROUGH: Duane Boniface, Assistant Executive Director, Office of Hazard Analysis and Reduction (EXHR)

FROM: Furniture Tip-Over EXHR Team

SUBJECT: Notice of Proposed Rulemaking (NPR) Comments and Staff Response

---

Background

The Commission published a notice of proposed rulemaking (NPR) regarding clothing storage units (CSUs) on February 3, 2022 (87 Fed. Reg. 6246), proposing a safety standard addressing the risk of injury and death, particularly to children, associated with CSUs tipping over. The associated request for comments and information included all aspects of the NPR, along with specific requests for additional data, studies, and alternatives. CPSC received 66 written comments during the comment period, which closed on April 19, 2022. Four of these comments were duplicate submissions and one was non-responsive. CPSC also received eight oral comments during the CSU oral hearing, which was held on April 6, 2022. This memorandum summarizes the comments and provides staff's responses to the issues raised.

Comments and Responses

Epidemiological Analysis (Tab A)

Comment: Decline in Tip-Over Injuries

A trade association commented on the decline in tip-over injuries reported in the NPR briefing package and in the report, "Product Instability or Tip-Over Injuries and Fatalities Associated with Televisions, Furniture, and Appliances Report" for 2021, published in February 2022. Consumer advocates commented: "the numbers are still too high for a preventable hazard," and: "[d]espite this apparent decline, tip-over injuries and deaths still occur with alarming regularity."

U.S. Consumer Product Safety Commission
4330 East-West Highway
Bethesda, MD 20814
cpsc.gov

National Product Testing & Evaluation Center
5 Research Place
Rockville, MD 20850

Response

As reported in Tab A, for 2012 through 2021, at the 95 percent confidence level, there is a statistically significant linear decline in National Electronic Injury Surveillance System (NEISS)-reported, emergency department-treated child injuries involving all CSUs (including CSU tip overs with televisions); this trend is consistent with what was reported in the NPR for NEISS data from 2010 through 2019. With the addition of the new data, received after the timeframes searched for the NPR briefing package, there is also a statistically significant linear decline at the 95 percent confidence level in injuries to children involving CSU-only tip overs for 2012 through 2021. This trend is different from what was reported in the NPR: there was no statistically significant linear decline at the 95 percent confidence level in injuries to children involving CSU-only tip overs for NEISS data from 2010 through 2019. Staff cautions that the estimated number of injuries treated in emergency departments were likely influenced in some way by the COVID-19 pandemic for the years 2020 and 2021.[1] These newer data are also used in the economic analysis of costs and benefits.

Regardless of the reported decrease, there remains an unreasonable risk of injury associated with CSU tip overs, and there continues to be high numbers of fatal and nonfatal incidents. As staff reported in the NPR briefing package, when considering fatalities by year, other than 2010, there were at least three reported CSU tip-over fatalities to children without a television involved, each year, for the years 2001–2017. In 2018, there was one CSU tip-over fatality to a child without a television involved; and in 2019, there were two. Although reporting is considered incomplete for fatalities occurring in 2020 and later years, CPSC staff is already aware of one CSU tip-over fatality with no television involved to a child in 2020, and five child fatalities with no television involved in 2021. Similarly, between 2000 and 2019, there has been at least one CSU tip-over death to an adult or a senior in each year, without a television involved, with the exception of 2006 and 2018. According to the NEISS, there were an estimated total of 84,100 injuries, with an annual average of 5,300 estimated injuries, related to CSU instability or tip-over incidents, with and without a television also falling, for all ages that were treated in U.S. hospital EDs from January 1, 2006 to December 31, 2021. Seventy-two percent of the estimated instability or tip-over ED-treated injuries were to children, an annual average of 3,800 estimated injuries to children over the 16-year period.

Scope and Related Definitions (Tabs C and G)

Comment: Suggestion to Exclude Wardrobes

A trade association suggested excluding wardrobes. The trade association stated that wardrobes fall within the existing American National standards ANSI/BIFMA X6.5 Home Office and Occasional-Use Desk, Table and Storage Products (formerly ANSI/SOHO S6.5 Small

[1] Schroeder, T., Cowhig, M. (2021). Effect of Novel Coronavirus Pandemic on 2020 NEISS Estimates (March–December, 2020). Available: https://www.cpsc.gov/s3fs-public/Covid-19-and-final-2020-NEISS-estimates-March-December-6b6_edited20210607_0.pdf.

Office/Home Office) and ANSI/BIFMA X5.9 Storage Units, adding that subjecting wardrobes to the proposed CSU rule would be an unjustified burden on manufacturers.

Response

ANSI/BIFMA X6.5-2022 Home Office and Occasional-Use Desk, Table and Storage Products is a voluntary standard, so compliance is not required. See Tab F for additional discussion of this standard.

Staff is aware of two fatal incidents involving children and wardrobes without televisions: one with two doors (no drawers) and one with two doors and a drawer.[2] As discussed in Tab C of the NPR briefing package, staff concluded that children putting their body weight on doors is a plausible interaction with a CSU, based on children's physical and cognitive abilities. Staff also assesses that the initial action of opening the doors is easily within physical and cognitive capabilities of children, including younger ones, an action that is similar to opening drawers. Swinging doors can affect CSU stability in a similar manner as other extendable elements, by shifting the center of gravity of the unit outward (toward the front feet) when the doors are opened.

Based on the incidents involving wardrobes and foreseeable use, staff assesses that wardrobes pose a tip-over hazard to children and should be within scope of the rule.

Comment: Suggestion to Exclude Vertical and Lateral File Cabinets

A trade association suggested adding vertical and lateral file [cabinets] to the list of products that generally do not meet the criteria in the definition of a CSU.

Response

The definition of "CSU" in the draft rule includes products that "may be reasonably expected to be used for storing clothing." Staff assesses that the vertical and lateral file cabinets, if they are not reasonably expected to be used to store clothing, would not be within scope of the rule. However, it is possible that some vertical and lateral cabinets, based on design, could meet the definition of a "CSU" and be perceived and used by consumers for that purpose, and could pose a tip-over risk. Accordingly, staff does not recommend specifically excluding vertical and lateral "file" cabinets from the scope of the rule. See Tab C for additional discussion of the definition of CSU.

[2] Balci-Sinha, R., Talcott, K. (2021). Tab C: Human Factors Assessment of the Clothing Storage Unit (CSU) Incidents, Research, and Child Physical and Behavioral Characteristics to Develop Recommendations for the Proposed Rule. Staff Briefing Package: Draft Notice of Proposed Rulemaking for Clothing Storage Units. U.S. Consumer Product Safety Commission, Bethesda, MD. Available at: https://cpsc.gov/s3fs-public/Proposed%20Rule-%20Safety%20Standard%20for%20Clothing%20Storage%20Units.pdf

Comment: Suggestion to Exclude Nightstands

A manufacturer suggested that products like nightstands be excluded from the rule and stated that the rule should reflect intended use of the product not possible use.

Response

In the NPR, staff reviewed and analyzed data on consumer perception and use of nightstands.[3] Staff is aware of products that are sold as nightstands but feature all the characteristics of CSUs. Products less than 27 inches tall, including nightstands, are already outside the definition of CSUs.

Staff is also aware of children climbing on nightstands; and use of nightstands for clothing storage.[4] The criteria for identifying a CSU in the recommended rule would keep some of these products within scope, and exclude others, depending on their closed storage, reasonable expected use, and the presence of extendable elements and doors. Thus, products that may be used as CSUs and that present the same hazard as CSUs, would be within the scope of the rule, while those that would not be used as CSUs, and would not present the same hazard, would be excluded. Accordingly, staff does not recommend specifically excluding nightstands from the scope of the rule.

The NPR explained that the criteria provided for determining whether a product is a CSU for purposes of the proposed rule were based on specific factors that contribute to instability and indicate that consumers are likely to perceive and use the product as a CSU. As explained, products that look and function just like a CSU may be marketed as something else, such as accent furniture, but consumers will still use it as a CSU. Accordingly, staff does not agree with the commenter's suggestion to rely on intended use instead of reasonably expected use.

Comment: Suggestion to Exclude Built-in Closets

A trade association and a major manufacturer suggested adding "built-in closets" to the list of exempted products; commenters state that built-in closets are intended to be permanently affixed to a wall and do not meet the definition of "freestanding."

---

[3] Balci-Sinha, R., Talcott, K. (2021.) Tab C: Human Factors Assessment of the Clothing Storage Unit (CSU) Incidents, Research, and Child Physical and Behavioral Characteristics to Develop Recommendations for the Proposed Rule. Staff Briefing Package: Draft Notice of Proposed Rulemaking for Clothing Storage Units. U.S. Consumer Product Safety Commission, Bethesda, MD. Available at: https://cpsc.gov/s3fs-public/Proposed%20Rule-%20Safety%20Standard%20for%20Clothing%20Storage%20Units.pdf

[4] Fors Marsh Group (2020). Consumer Product Safety Commission (CPSC): Furniture Tipover Report (Tab Q). Staff Briefing Package: Draft Notice of Proposed Rulemaking for Clothing Storage Units. U.S. Consumer Product Safety Commission, Bethesda, MD. Available at: https://cpsc.gov/s3fs-public/Proposed%20Rule-%20Safety%20Standard%20for%20Clothing%20Storage%20Units.pdf

Response

The definition of "freestanding" in the NPR excludes built-in units. As such, built-in furniture would not meet the definition of a "CSU," and, therefore, need not be included as a separate exemption from the rule. However, staff assesses that units that consumers can use without attaching the unit to the wall or other upright rigid structure, and that otherwise meet the scope, should be included within scope. Additional analysis on the definition of "freestanding" is provided in Tab C.

Comment: Suggestion to Remove Exemption for Portable Storage Closets

Two members of the general public and an anonymous commenter suggested removing the exemption for portable storage closets, stating that portable closets would be more likely to tip over because these products are on wheels and are easily moveable. A consumer advocacy group supported the exclusion of portable storage units from the NPR.

Response

In the NPR, staff's review of incident data showed that there were no reported portable storage closet or clothes locker tip over incidents among the 89 fatal or 263 nonfatal CPSRMS incidents involving children and CSUs without televisions. There were also no incidents with portable storage closets or clothes lockers among the fatal or nonfatal CPSRMS incidents involving children and CSUs without televisions received after the timeframes searches for the NPR. There were not enough incidents involving portable storage closets or clothes lockers in the NEISS data to make estimates for these CSU categories. Because of the lack of reported child fatalities or injuries associated with these product types, and because they do not pose the same tip-over risks as other CSUs, staff continues to recommend excluding portable storage closets and lockers from the scope of the rule. Staff will continue to monitor incident data for these product categories.

Comment: Pull-Out Shelves

A major manufacturer suggested excluding pull-out shelves from the scope of the draft rule, due to lack of reported incidents, or if pull-out shelves are to be included, they recommend revising the fill weight to be half of a drawer's fill weight per cubic foot (4.25 pounds), instead of 8.5 pounds.

Response

Staff assesses pull-out shelves can reasonably be used to store clothing, and as extendable elements, they pose a hazard (*e.g.*, of climbing) similar to drawers. In addition, because pull-out shelves are extendable elements, when open and loaded, they would increase the instability of the CSU, like an open and filled drawer. Therefore, staff disagrees with excluding pull-out shelves from the draft rule. The NPR proposed to use the same fill weight of 8.5 pounds per

cubic foot of functional volume for drawers and pull-out shelves. However, the NPR also raised the possibility of using a lower fill weight for pull-out shelves, based on the largely non-contained nature of a pull-out shelf.[5] CPSC requested comments and data supporting or refining the proposed fill weight for pull-out shelves; however, staff did not receive any data in the public comments. The commenter-proposed fill weight of 4.25 pounds per cubic foot (half that of drawers) is the same as the example that staff provided in the NPR. As detailed in Tab C, ESHF staff conducted additional testing to determine whether 8.5 pounds per cubic foot of functional volume is a reasonable clothing fill weight for pull-out shelves. ESHF staff concluded that the assumed clothing fill weight of 8.5 pounds per cubic foot of functional volume is reasonable; staff does not recommend changing the fill weight for pull-out shelves from the 8.5 pounds per cubic foot of functional volume used in the NPR.

Comment: Definition of CSU

A major manufacturer commented that the phrase "reasonably expected to be used for storing clothing" is too broad and does not specify product features, allowing for too much interpretation by the manufacturer. The commenter suggested using the phrase "clothing storage units with design features known to contribute to significant tip-over risks."

The commenter also suggested adding to the definition of "CSU": "a top surface and side panels that are rigid and solid," as well as: "a handhold feature at or below 4.12 ft." The commenter also suggested adding the language: "typically found in a bedroom environment" to clarify the scope.

The same major manufacturer also commented that it was unclear which category would be used to define certain spaces and suggested specific changes to the wording for the "open storage" and "open space" definitions. The commenter also recommended revising the portions of the definition of a "CSU" that involve closed storage volume, so that firms cannot increase open storage to circumvent the rule. A trade association asked for clarification on the portion of the "CSU" definition relating to open storage and open space.

Another manufacturer suggested changing the CSU volume criterion from 1.3 cubic feet to 3 cubic feet, which the commenter believes is more representative of a volume that consumers associate with a CSU.

[5] Balci-Sinha, R., Talcott, K. (2021.) Tab C: Human Factors Assessment of the Clothing Storage Unit (CSU) Incidents, Research, and Child Physical and Behavioral Characteristics to Develop Recommendations for the Proposed Rule. Staff Briefing Package: Draft Notice of Proposed Rulemaking for Clothing Storage Units. U.S. Consumer Product Safety Commission, Bethesda, MD. Available at: https://cpsc.gov/s3fs-public/Proposed%20Rule-%20Safety%20Standard%20for%20Clothing%20Storage%20Units.pdf., p. 136.

Response

The definition of a "CSU" includes criteria and features that are commonly considered for use to store furniture, as well as criteria and features that contribute to a unit being used in ways that make it a tip-over hazard (*e.g.*, closed storage, height, freestanding).

Most CSUs are made of rigid and solid materials because these features are generally required to enable the unit to stand upright and hold extension elements. However, there are CSUs that have some non-rigid elements, retain extension elements, and present the same tip-over hazard. Staff assesses that rigid and solid top surface and side panels are not distinguishing features of a CSU, and therefore, these features should not be added to the definition.

Regarding "handholds," staff recommends a revised definition and updated figure to reflect the definition of "maximum handhold height," which includes the top of the CSU, more clearly. See Tab C for additional details.

Staff does not recommend including the phrase "typically found in a bedroom environment" in the definition of "CSU" because staff assesses that this phrase does not clarify meaningfully the scope of the rule. As stated in the NPR, CSUs are typically intended and used for storing clothing, and therefore, they are commonly used in bedrooms. However, consumers may also use CSUs in rooms other than bedrooms and use them to store items other than clothing, and furniture marketed for uses other than as a CSU can look, function, and be used as a CSU. As the studies discussed in the NPR indicate, consumers use products as CSUs based on their functionality, not where they are typically located in a residence.

Staff agrees that changes to the wording for the "open storage" and "open space" definitions would help to clarify the meaning. Additional analysis and staff's specific recommendations are provided in Tab C. Staff does not recommend revising the criterion on open and closed storage volume, because the purpose of this criterion is to exclude units that are not reasonably likely to be used for storing clothing. As explained in the NPR briefing package, consumers commonly associate closed storage with CSUs. As examples, bookshelves with limited closed storage space or console tables with tall legs and limited storage space, are unlikely to be perceived as or used as CSUs. Such units are also less likely to have extendable elements attached to the unit that can be used for leverage (*e.g.*, when climbing or pulling) and contribute to instability.

Regarding the comment to increase the minimum closed storage volume to 3 cubic feet, staff recommends retaining the 1.3 cubic feet minimum stated in the NPR. In the NPR staff briefing package, staff estimated that the minimum drawer size that could reasonably accommodate clothing is fairly small. The smallest total functional volume of the closed storage for a CSU involved in a nonfatal incident without a television is 1.38 cubic feet; this unit was advertised to hold about five pairs of folded pants or 10 T-shirts in each of its two drawers.[6] As such, this is a

[6] Balci-Sinha, R., Talcott, K. (2021.) Tab C: Human Factors Assessment of the Clothing Storage Unit (CSU) Incidents, Research, and Child Physical and Behavioral Characteristics to Develop Recommendations for the Proposed Rule. Staff Briefing Package: Draft Notice of Proposed Rulemaking

reasonable closed storage volume threshold, and a larger threshold would exclude from the scope of the rule products likely to be used as CSUs that pose the same tip-over hazard.

Comment: Suggestion to Exclude Lighter Weight CSUs

Two manufacturers and a trade association suggested excluding CSUs that weigh less than 30 pounds due to the lack of incident data involving these products. A manufacturer of plastic storage units stated that the proposed rule would ban products such as theirs, of which approximately 15 million units more than 27-inches tall were sold over the past 25 years, adding that such ban would offer no benefit because they are not implicated in incidents. The commenter asserted that one such unit weighs 27.5 pounds, and the rest weigh less than 20 pounds. As such, this commenter recommended excluding units that weigh less than 30 pounds. The commenter also noted that ASTM has balloted this limit and this is consistent with the data in the NPR, pointing to the 34-pound CSU involved in a fatal incident with three drawers missing, and the 31-pound CSU involved in a nonfatal incident.

Response

Tab C and Tab D of this briefing package contain a thorough analysis of this issue. A brief overview is provided here. Staff determined that, because of the mechanism through which CSU tip-over fatalities and serious injuries occur and the use of CSUs, the weight of the CSU, along with the weight of its contents, are a relevant consideration, and some exclusion of lightweight units is appropriate. Staff's assessment of the incident data demonstrates that when incident reports indicate whether a CSU was filled at the time of an incident, most incidents involved partially or fully filled drawers (95 percent of fatal CPSRMS incidents and 90 percent of nonfatal CPSRMS tip over incidents involving children and CSUs with no television). The proportion of incidents that reported full drawers was greater for fatal incidents (25 percent) than for nonfatal incidents (17 percent). Therefore, when considering the weight that may result in an injury or death, it is necessary to consider the combined weight of the empty CSU and the weight of its contents. As explained in Tabs C and D of this briefing package, staff has determined that the total weight of a CSU that poses an unreasonable risk of injury or death is 57 pounds or greater. This is based on the lowest known weight of a non-modified CSU involved in a fatality, which was 57 pounds (the unit was reportedly empty at the time of the incident) and the other factors discussed in Tabs C and D. Therefore, staff recommends including in the final rule only CSUs that have a combined weight greater than or equal to 57 pounds with all extendable elements filled with at least 8.5 (pounds/cubic foot) times their functional volume (cubic feet). In contrast, the commenter's recommended exclusion based on the empty weight of a CSU does not address the risk, because a tip-over incident involving a CSU with a combined weight of 57 pounds or more can result in a fatal incident.

---

for Clothing Storage Units. U.S. Consumer Product Safety Commission, Bethesda, MD. Available at: https://cpsc.gov/s3fs-public/Proposed%20Rule-%20Safety%20Standard%20for%20Clothing%20Storage%20Units.pdf

Comment: Definition of Drawer

A major manufacturer commented that the "drawer" definition should include the words "rigid, solid, and enclosed" and exempt "bins." The commenter stated that units constructed with mesh, fabric, or paper do not appear in incidents. The same commenter stated that the "closed storage" definition includes "opaque" doors but not "opaque" drawers, and that the opaque feature should apply to both.

Response

After reviewing various CSUs on the market, staff assesses that most drawers are rigid, solid, and enclosed to hold clothes because these features are generally required to enable them to function as drawers. However, staff is aware of some units with drawers that have flexible sides (*e.g.*, cloth or mesh over rigid frames, cardboard, plastic) that are marketed as, and can be used as, CSUs; can be loaded to sufficient weight to pose a hazard; and can present the same tip-over hazard as CSUs with rigid/solid drawers. Staff, therefore, disagrees with adding "rigid, solid, and enclosed" to the definition of "drawer."

The comment that suggested a "bin" exemption is addressed in detail in Tab C of this briefing package. As a brief overview, staff assesses that a ⅔-extension criterion will reasonably exclude components that are not usable as extendable elements and are unlikely to contribute to instability. Staff recommends amending the definition of "drawer" to include only components that are retained in the case (*i.e.,* do not fall out on their own) when extended up to ⅔ the shortest internal length, when empty.

Regarding opaque drawers, staff specified "opaque" door in the NPR because consumer research showed that consumers perceive glass (non-opaque) doors to be for display instead of clothing storage. However, as discussed in Tab C of the NPR briefing package, staff is aware of CSUs on the market with clear drawers or drawer fronts, and consumers use lightweight plastic units with non-opaque drawers to store children's clothing.[7] Staff, therefore, does not recommend adding "opaque" to the "drawer" definition.

Comment: Height

Several consumers suggested expanding the scope of the rule to include CSUs that are 24 inches or taller, instead of the 27 inches or taller in the NPR. Another consumer suggested 12.1 inches as the minimum height to be covered by the rule, which is about half the size of a 5-month-old infant. Another anonymous commenter supported the 27-inch limit in the rule.

Response

As discussed in the NPR staff briefing package, the shortest reported CSU involved in a fatal incident without a television is a 27.5-inch-tall, 3-drawer chest. Staff is aware of nonfatal

[7] See Tab C of the NPR briefing package, p. 165.

incidents involving units below 27-inches in height; however, the number of incidents associated with shorter units is small, and these incidents did not result in deaths or serious injuries. Based on the known incidents and analysis of tip-over risk, staff assesses that the 27-inch minimum height in the scope of the NPR is reasonable and recommends retaining this criterion in the scope of the draft final rule. CPSC will continue to monitor incidents, and staff can amend the rule, if justified.

Comment: Door-Only Units

A major manufacturer, trade association, and a consumer suggested removing from the scope of the rule, CSUs that have only doors but no drawers. The major manufacturer asserted that these units are less susceptible to children climbing and less represented in incident data. The manufacturer and trade association suggested future research on this topic and developing tests to target specific risks presented by doors.

Response

Regarding the comments to exclude doors-only units from the scope of the rule, as discussed in the NPR staff briefing package, staff is aware of a fatal tip-over incident involving a unit with doors only (no drawers or other extension elements).[8] Although the storage on these units does not extend, they typically have shelves or other features that children can use to climb or interact with, just like other CSUs.

As discussed in Tab C of the NPR briefing package, staff concluded that children putting their body weight on doors is a plausible interaction, based on children's physical and cognitive abilities. This would have a similar effect on instability as a child putting their weight on drawers, thereby, contributing to the likelihood of the CSU tipping over. In the child-climbing study in Tab R of the NPR briefing package, researchers found that the vertical forces associated with a child hanging by the hands were close to the body weight of child.[9] For this reason, the threshold moment for doors simulates the weight of a child hanging on an open door (does not include the extra forces from extending the weight beyond the CSU). Staff also assesses that the initial action of opening the doors is easily within physical and cognitive capabilities of children, including younger ones, similar to opening drawers. Because children

[8] Balci-Sinha, R., Talcott, K. (2021.) Tab C: Human Factors Assessment of the Clothing Storage Unit (CSU) Incidents, Research, and Child Physical and Behavioral Characteristics to Develop Recommendations for the Proposed Rule. Staff Briefing Package: Draft Notice of Proposed Rulemaking for Clothing Storage Units. U.S. Consumer Product Safety Commission, Bethesda, MD. Available at: https://cpsc.gov/s3fs-public/Proposed%20Rule-%20Safety%20Standard%20for%20Clothing%20Storage%20Units.pdf

[9] Reed, M., Ebert, S., Jones, M. (2020.) Forces and Postures During Child Climbing Activities. Technical Report, University of Michigan Transportation Research Institute (Tab R). Staff Briefing Package: Draft Notice of Proposed Rulemaking for Clothing Storage Units. U.S. Consumer Product Safety Commission, Bethesda, MD. Available at: https://cpsc.gov/s3fs-public/Proposed%20Rule-%20Safety%20Standard%20for%20Clothing%20Storage%20Units.pdf

are able to open doors, and open doors provide a point of leverage for children to climb, and because door-only units have been involved in tip-over incidents, staff assesses that units with only doors pose a hazard to children, and that they should be within scope of the rule.

Comment: Children's Products

A consumer suggested regulating CSUs that are children's products only, while another consumer suggested requiring more stringent standards for children's products. A consumer advocacy group suggested that the rule should apply to all CSUs.

Response

In the NPR, staff discussed that general-use CSUs are more heavily represented in the incident data than children's products, and that children's interactions are not limited to CSUs intended for children. In addition, general-use CSUs are commonly used in children's rooms, as indicated by the studies discussed in the NPR. Accordingly, focusing the rule on only children's products would not adequately address the hazard, and staff recommends that the requirements apply to general use CSUs, as well as children's product CSUs, as proposed in the NPR.

Warning Label Requirements (Tab C and G)

Comment: Warning Label Effectiveness

Several consumers, and a consumer advocacy group, commented that warnings are ineffective, suggesting that consumers don't pay attention to, read, or follow warnings, adding that warnings are unlikely to change consumers' risk perception. Other consumers expressed support for the proposed warning labels as a method to educate consumers about the hazard.

Response

In general, warning labels are a less-effective way to address a product hazard, as compared to performance or design requirements intended to reduce or eliminate the hazard from the product. This is, in part, because warning labels rely on consumers seeing, understanding, and following the warnings. As the NPR explained in detail, other efforts to raise consumer awareness of the CSU tip-over hazard, such as information campaigns, have not adequately reduced the risk of injury. For these reasons, the NPR proposed requirements for inherent stability for foreseeable interaction scenarios. However, there are actions consumers can take to further reduce the risk of tip overs, and that information is being presented via a warning label in the draft rule. Staff's recommended format, placement, and content for the warning labels intended to improve the noticeability, comprehension, and compliance with the warning label. Staff expects that warning labels will further improve stability, by educating and advising

consumers about the hazard, and the warning labels offer steps consumers can take to reduce it.

Comment: Warning Label Size

A consumer commented that the 2-inch by 2-inch minimum size for the warning label is too small because the font size needs to be big enough to be legible.

Response

The purpose of the minimum-size requirement is to prevent manufactures from making unreasonably narrow or short labels, which could affect readability. In addition to minimum label size, the draft rule specifies that the font of the label text must meet the minimum size specified in ASTM F2057 – 19, section 8.2.3, which is similar to label font requirements in other voluntary standards that the Commission has adopted. These requirements should make the label text sufficiently legible. Also, in practice, the required content and format results in a larger label than the minimum size, with flexibility in exact size, layout, and dimensions. In addition, staff now recommends a child climbing symbol with three panels, instead of the single panel symbol in the NPR (see Tab C for additional analysis); this new symbol will increase the overall size of the label (see the response to "Warning label content: symbol" for more details).

Comment: Warning Label Format

A consumer suggested a font size of 10 or 16.8 point for the warning text.

Response

Regarding font size, the minimum 0.1-inch capital letter height specified in the draft final rule for the warning statements is approximately equal to a 10-point font, and the minimum 0.15-inch capital letter height for the signal word is approximately equal to a 15-point font; these are similar to the font sizes suggested by the commenter.

Comment: Warning Label Content - Language

Comments from consumers on warning label content included: expanding the warning to include all people, instead of just children; adding the stability rating to the warning; including a warning to leave warning labels on furniture; providing warnings about CSU use on carpet; enhancing warnings about the danger of tip over associated with TVs on CSUs. A manufacturer and a trade association suggested giving manufacturers the maximum amount of flexibility to communicate hazards that they identify within the confines of the ANSI Z535.4 format; and limiting content to only the hazards presented by the specific unit, as determined by the manufacturer. Some consumers recommended including Spanish language warnings in addition to the required English-language ones.

Response

In the NPR, staff provided a detailed review of the warning statements in the ASTM F2057 – 19 voluntary standard and made recommendations based on consumer feedback from the CSU use study and expert opinion. Staff assesses that adding the stability rating to the warning label is not necessary because a hang tag about the stability rating is already required to be on the product, and the hang tag requirement is intended to provide information to consumers at the time of purchase, so they can make informed buying decisions. An on-product warning label would not be as likely to be visible as the hang tag to consumers at the time of purchase. The warning label includes instructions in italics about leaving the warning label on the product and not attempting to remove it to get the attention of the user. Staff does not recommend including warnings about use on carpet. As explained in the NPR briefing package, labels should not include warning statements that lack credibility or are inconsistent with expected consumer utility. Because consumers are likely to have carpet where they will place CSUs, and given they may not have the option to remove the carpet, such a warning would not likely be effective. The statement about never placing a TV on the product and the pictogram showing no TV are dedicated alerts to get the attention of the user and specifically address TV-related hazards. Staff disagrees with allowing flexibility to modify the content, because the instructions listed on the label are effective and direct statements for consumers to follow to further reduce the risk of tip over.

The required content for warning labels is based on human factors assessments, studies, and commonly used approaches in voluntary standards. Leaving content up to manufacturers could result in ineffective warnings that do not benefit from these insights. As the NPR and recommended clarifications for the final rule indicate, staff recommends specifying that warning content must not deviate from what is provided in the rule. This is so that labels will contain precisely the information that staff's expertise determines is necessary and understandable. Adding additional content or language to that same label may detract from the effectiveness of the label, by overloading consumers with information, or reducing visibility and comprehension. However, this does not prevent manufacturers from providing additional separate labels. Manufacturers can place another label or other means to communicate specific content and also add another label in Spanish. It is already fairly common for manufacturers selling to the North American market to include labels in English, French, and Spanish.

Comment: Warning Label Content - Symbol

A consumer advocacy group expressed concern with the specific style of anti-tip device shown in the third panel of the variant 1 child-climbing symbol, although the commenter generally supported the variant 1 symbol. The commenter's concern was that the drawing in the third panel looks like a style of anti-tip device that uses a plastic cable tie, and the commenter expressed concern about the effectiveness of that style of anti-tip device.

Response

As stated in the NPR briefing package, ESHF staff worked with a contractor to test the comprehension of various symbols, including two variant child climbing symbols. Variant 1, which is a three-panel symbol, passed comprehension testing when scored with strict (*i.e.*, fully correct) scoring criteria (87.5%), with no critical confusions.[10] Because this symbol has a higher comprehension score than the child climbing symbol from ASTM F2057 – 19 that staff recommended in the NPR, and based on comments, staff recommends replacing the NPR symbol with the variant 1 three-panel child climbing symbol. Based on comments, staff also recommends allowing manufacturers to modify the third panel (*i.e.*, the one depicting attachment to the wall) to show a specific anti-tip device included with the unit. Staff provides additional analysis of this in Tab C.

Comment: Warning Label Location

Multiple consumers commented that electronic notices and alerts could increase the likelihood that consumers read the warnings, and that warnings should account for online shopping. Some consumers also suggested a system for consumers to provide verification that they had read and understood the warning at the point of sale, a method that is currently used by one major retailer. Commenters also suggested including warnings in other locations, such as placement in instruction and assembly manuals and online product listings, on packaging and on other paperwork that comes with the unit, and with electronic and paper receipts. One manufacturer commented that warnings should be provided only at the point of sale, instead of on the unit. Regarding position of warning labels on the unit, a consumer advocacy group commented that the label should be on the bottom of the drawer, against the drawer front; and suggested that units also include a temporary warning on the outside of the drawer or door

Response

The content of the recommended warning label primarily includes actions that consumers can take to further reduce the risk of tip over; the on-product label, as well as instruction manual, are appropriate places to inform the consumer about these actions while the consumer is first exposed to the product, such as during assembly of the product; in addition, warning labels serve as a permanent reminder of the hazard while using the product. Staff now recommends that the hang tag be displayed on the websites that allow consumers to purchase a product online; this applies to online sales by "manufacturers," which includes importers; retailers are also included if they are also manufacturers or importers. The hang tag includes some instructions for the consumer to follow to further reduce the risk of tip over. Additional analysis is provided in Tab E.

[10] Kalsher, M. (2021). CPSC Warning Label Safety Symbol Research: Final Report. Contract Number 61320620P0038. Available at: https://www.cpsc.gov/s3fs-public/CPSC-Warning-Label-Safety-Symbol-Research-Final-Report-with-CPSC-Staff-Statement.pdf?VersionId=qCnIivtD0HRs3dEW69p.UVSDxTxvvESq.

Comment: Warning Label Location for RTA Units

A trade association expressed concern about the location of labels for Ready-To-Assemble (RTA) units and noted that no guidance is offered on how to address RTA units if all drawers are the same size and can be installed in any drawer location. The commenter stated that the placement of the warning is outside the control of the manufacturer, and if "misplaced," the unit is deemed to be noncompliant.

Response

The NPR and draft final rule requirements state that the warning label for consumer-assembled units shall be pre-attached to the panel, and the assembly instructions shall direct the consumer to place the panel with the warning label according to the placement requirements. Therefore, instructions for RTA units would direct consumers to place the drawer containing the warning label in the correct position to comply with the draft final rule placement requirements.

Identification Labeling Requirements (Tab C and G)

Comment: Identification Label Content

A major manufacturer commented that the NPR requires the name of the manufacturer, distributor, or retailer to be included. The commenter said that this will require a secondary label to be affixed to the CSU identifying the distributor and/or the retailer, because most warnings are added by the manufacturer.

Response

The draft rule requires the name and address (city, state, and zip code) of the manufacturer, distributor, or retailer; it does not require all three to be present. Therefore, the manufacturer could simply apply a label with its information. In addition, this information is already required for the general certificate of conformity.

Comment: Identification Label Permanency Requirements

A major manufacturer and a retailer commented that the informational label should not be limited to a label because other means of marking a CSU can be as effective and permanent as a label.

Response

The permanency of labels and warnings testing in ASTM F2057 – 19 section 7.3, which is incorporated by reference into the draft final rule, includes requirements for paper labels, non-paper labels, and "warnings" applied directly to the surface of the product. Marking or labeling would have to conform to these requirements. Staff recommends clarifying that the

identification label in the NPR was not limited to a paper or other adhesive label but also included other ways of labeling, including an identification mark. Additional details are provided in Tab C.

CSU Interactions and Use (Tab C)

Comment: Children's Weight

One consumer suggested increasing the specified weight of children that is used to determine the tip-over moments from 51.2 pounds to about 66 to 70 pounds, given the average weight of an 8-year-old is about 57 pounds. Several other consumers suggested accounting for children weighing 60 pounds in testing. An anonymous commenter suggested increasing the specified weight to 65 pounds acknowledging the increase in juvenile obesity in the United States. Another consumer suggested a specified weight of 70 pounds as a means to protect heavier children because they are still present in the incidents.

Response

Although the specified weight considered in the NPR is based on a 95th percentile, 3-year-old male (51.2 pounds), this weight also covers more than 90 percent of 4-year-old males, more than 75 percent of 5-year-old males, more than half of 6-year-old males, and more than a quarter of 7-year-old males. In addition, virtually all 3- and 4-year-old females, more than half of 5- and 6-year-old females, and more than a quarter of 7-year-old females are also covered. In scenarios that are less severe than the reasonably worst-case scenario that is subject to the proposed test (*e.g.*, fewer drawers open, less drawer fill), a higher number of older children would be protected. Regarding increasing obesity, the Centers for Disease Control and Prevention (CDC) Anthropometric Reference used for the weight is based on a nationally representative sample collected in 2014 through 2018, so it should reflect current weights of children more accurately than older data sources, such as the CDC Growth Charts.

Comment: Magnetic Locks

One consumer suggested that CPSC consider adding magnetic locks to CSUs to prevent children from opening drawers unsupervised. The commenter stated that the CPSC should calculate the maximum moment a 51.2-pound child exerts on a CSU, then use this maximum moment to determine the strength of the magnet suitable to attach to drawers. The commenter stated that the wholesale prices of magnetic door catches are much lower than installing interlocking systems.

Response

The NPR contained performance requirements related to CSU stability to address the tip-over hazard. Performance requirements provide greater flexibility for innovation and for

manufacturers to meet the standard. If manufacturers choose to use magnets to conform with the draft rule (*e.g.*, as part of interlocks), that would be an option available to them; however, the performance requirements do not address drawer locking mechanisms that are designed to be disengaged by the consumer, such as child safety locks.

Comment: Opening Drawers

A trade association commented that fully opening all drawers for a stability test is not realistic. If a child is to climb a unit, the lower drawers will be fully extended, and each upward drawer will be less extended to create the stairstep of drawers. The commenter stated that the ANSI/BIFMA standards require the worst-case scenario of two drawers loaded to the maximum and extended fully unless an interlock restricts it to only one drawer. Numerous commenters, including consumers and consumer advocacy groups, supported CPSC's proposal to test multiple factors at once (*e.g.*, carpet, fully open and filled drawers, and climbing.)

Response

In the NPR briefing package, staff reviewed incident data and videos demonstrating that children climb CSUs with multiple open drawers, and that children open drawers to the maximum drawer extension. Videos include a nonfatal incident with a 3-year-old child climbing a CSU with all drawers open and fully extended.[11] Staff assesses children use a variety of climbing techniques, and the recommend test methods reflect a reasonable real-world interaction. Staff agrees that including multiple factors simultaneously in one test will generate a realistic scenario that is also supported by incident data and naturalistic videos.

Tip Restraints (Tab C)

Comment: Tip Restraints

Some consumers suggested creating easier and simpler attachment mechanisms. Several suggested that CPSC should mandate anti-tip kits to be provided with CSUs. Consumers and consumer advocacy groups, expressed concern that tip restraints can fail over time, and manufacturers should test the tip restraints in real-world conditions, attached to the wall as well as the furniture. Manufactures and a trade association commented that tip restraints are the safest way to prevent tip-over incidents.

[11] Mella, L., Newens, A., Taxier, D. (2021.) Tab M: Mechanical Evaluation and Analytical Modeling of Incident-Involved Clothing Storage Units. Staff Briefing Package: Draft Notice of Proposed Rulemaking for Clothing Storage Units. U.S. Consumer Product Safety Commission, Bethesda, MD. Available at: https://cpsc.gov/s3fs-public/Proposed%20Rule-%20Safety%20Standard%20for%20Clothing%20Storage%20Units.pdf.

Response

Staff's recommended test methods focus on inherent stability, without tip restraints for the reasons stated above and in the other memorandums in this briefing package, and staff aims to ensure that CSUs can withstand various interactions, including climbing with open and filled drawers. However, tip restraints could further reduce the risk of tip over for more extreme interactions, such as bouncing and jumping, and for interactions of older and heavier children. In addition, for existing CSUs in homes, installing a tip restraint may help reduce the risk of tip over. In the future, staff aims to continue to work with ASTM to update its requirements for tip restraints. As part of this potential future work, staff recommends evaluating the strength requirements for tip restraints to determine whether they account for the forces outlined in the NPR from children's interactions, multiple open and filled drawers, and carpet, as well as the forces from a tipping CSU. Staff encourages innovative, fool-proof, easy-to-install restraints to improve the likelihood that CSUs are properly anchored.

Comment: Public Awareness Campaigns

Several commenters, including consumers, an anonymous commenter, and a consumer advocacy group, suggested that the Anchor It! campaign and manufacturer campaigns are insufficient to address the tip-over risk. Consumers and consumer advocacy groups discussed barriers to anchoring, including that some consumers are unaware of the risk, are not allowed to drill holes in their homes, or lack the capability and knowledge to properly install tip restraints. Consumers and consumer advocacy groups also commented that tip restraints should not be a substitute for the rule.

Some commenters suggested that a more effective public awareness campaign should be part of the rule. An anonymous commenter suggested collaborating with organizations that directly serve low-income communities, such as Voices for Virginia's Children, National Center for Children in Poverty, National Center for Families Learning, Zero to Three: National Center for Infants, Toddlers, and Families. The commenter also suggested that CPSC to partner with more hospitals and obstetricians and gynecologists to provide graphics and pamphlets with accessible language to educate consumers.

Response

In the NPR, staff assessed that, given the low rates of anchoring, the barriers to anchoring, and concerns about the effectiveness of tip restraints, tip restraints should not be relied upon as the primary method of preventing CSU tip overs. Instead, staff recommended that CSUs be inherently stable, without relying on additional intervention from the consumer. However, staff supports the use of effective tip restraints as a secondary safety system to enhance stability.

Staff supports information and education campaigns to reach out to consumers. "Anchor It!" is the CPSC's national public education campaign aimed at preventing furniture and TV tip overs from killing and seriously injuring children. The campaign has more than 70 collaborators and conducts outreach education activities to underserved communities.

Hang Tag (Tab E)

Comment: General Support or Opposition

Staff identified 36 comments related to the proposed hang tag. Eighteen of these comments, from consumers and consumer advocacy groups, expressed general support, and seven, from consumers and trade associations, expressed general opposition; staff did not identify an overall position for the remaining 11 comments.

Commenters supporting the hang tag indicated that the stability rating makes consumers aware of the safety of different CSU models and incentivizes manufacturers to produce safer furniture. Commenters opposing the hang tag did not believe that it was necessary and found it too technical and rating difficult to associate with risk.

Response

Staff continues to recommend a hang tag that will provide comparative performance and technical data on CSU stability to consumers. Staff assess that this information is important for consumers to make informed comparisons about the stability of a CSU when buying. In addition, the hang tag will incentivize manufacturers to build CSUs that are more resistant to tip over, and thus, further reduce the risk of serious injury and death from tip over. Staff recommends a modified hangtag for the reasons discussed in Tab E.

Comment: Stability Rating Explanation

A trade association commented that although a higher number represents a more stable unit, there is no content to suggest whether the unit is more stable for a 3-year-old versus a 5-year-old or whether it is stable for an earthquake zone. A major manufacturer commented that use of text creates issues for consumers who are not fluent in English. A consumer commented that the information on the back side of the hang tag should be in the front of the tag so that consumers get an explanation of the rating quickly. A trade association and a manufacturer suggested providing flexibility for manufacturers to determine and warn of specific hazards for their unit.

Response

Based on comments, staff recommends adding a brief explanation of the rating on the front of the tag. The purpose of this requirement is to make it easier for consumers to see the meaning of the stability rating on the front of the hang tag at first glance. This explanation is in the form of one sentence placed next to the rating scale and states: “This unit is [MANUFACTURER TO ENTER THE RATING VALUE] times more stable than the minimum required.” This is discussed in more detail in Tab E, along with an example label reflecting the recommended change. Regarding the comment on consumers who are not fluent in English, although the

hang tag is required in English, nothing in the rule prevents manufacturers from including a separate hang tag containing the same information in another language.

Comment: Rating Scale Interpretation

One consumer stated that while a stability rating of 3 is completely safe, the perception that a rating of 3 out of 5 may imply that the product is still risky. In smaller stores, consumers may only see a 1 or a 2 on a hang tag and cannot compare the unit(s) with larger numbers of products. A consumer who supported a rating scale stated that it incentivizes manufacturers to produce safer furniture. Several commenters, including trade associations, recommended changing the rating scale. They stated that CPSC did not identify any units that could achieve a rating of 2 or higher, and that the industry groups' own testing of a wide variety of units also found that, even with extensive changes to CSUs to comply with the rule, CSUs would not exceed a rating of 2. Moreover, the commenters pointed out that because the minimum rating required under the rule is a 1, that is sufficient. As such, a rating scale that goes up to 5 will suggest incorrectly to consumers that units with ratings lower than 5 are unsafe and will be confusing for consumers because no units with higher ratings will be available. One trade association also expressed concern that the rating scale would be used in litigation as evidence that lower-rated units have defects. As a solution, one trade association suggested that the hang tag merely indicate that the unit "passed." Alternatively, a smaller scale (lower than 5) would be more appropriate. Some commenters questioned whether smaller differences, such as a range between 1.3 to 1.7, would affect purchasing decisions significantly, and they suggested CPSC conduct a study with consumers. Some commenters thought that if most CSUs cluster in the 0 to 2 range, and very few achieve a rating of 3 or greater, and none achieve a 4 or 5, consumers may continue to use older and less safe CSUs, instead of purchasing a newly built CSU, because they may perceive the CSU with those ratings to be unsafe.

Response

Staff does not support solely adding a pass or fail label because the products that fail the tests cannot be on the market, and therefore, consumers would not be seeing CSUs with a "fail" label. Regarding the comments about the perceived level of risk and false sense of security, staff included statements on the front of the hang tag regarding instability, directing consumers to take additional steps to make the CSU safer, such as securing it to a wall and not letting children climb on the CSU. These statements are similar to the content on the warning label, which is required on all CSUs, regardless of the stability rating.

The rating is derived from the technical performance of the unit when tested to the draft final rule. A hang tag displaying a rating greater than 1 confirms for the consumer that the unit meets the standard, and the hang tag provides technical information for consumers who wish to compare units.

Based on CPSC's testing, and information provided in the comments, most CSUs on the market, once they are modified to meet the standard, would not exceed a stability rating of 2. Staff understands commenters' concerns that a scale that goes up to 5 may not be particularly useful, given that CSUs that exceed 2 are unlikely to be available. As such, staff recommends revising the scale to range from 1 to 2, rather than 1 to 5. The specification for a single decimal will provide a stability rating within that 1 to 2 scale. The top of the scale also states: "2 or more," which allows for units that may eventually exceed a rating of 2. If CSUs exceed a stability rating of 2 in the future, the Commission could amend the rule to adjust the range of ratings. Interested parties could petition the Commission for such a rulemaking.

Comment: Rating Scale Color

A consumer advocacy group suggested using colored ratings (*e.g.*, red, yellow, green) to get the attention of the consumer.

Response

Although color is traditionally used to get a user's attention, any rating at or above 1 is permissible under the rule, marking certain numbers in colors other than green may suggest that the products are unsafe.

Comment: Increased Cost to Achieve Higher Ratings

A trade association commented that, based on their testing of a wide variety of CSUs, none achieved a rating of 1, and in reality, no CSU will ever achieve a score of 2, 3, 4, or 5. Manufacturers will have to double the cost to achieve a rating of 2, while reaching 1 is extremely difficult and costly.

Response

It is common in other product sectors with safety rating scales for manufacturers to offer products at a variety of prices and ratings to segment the market and meet demands of different consumers for different ratings. For example, all automobiles legally sold must meet the minimum federal motor vehicle crash safety standards, but there is a market for vehicles that have a higher rating on NHTSA's 5-star crash safety ratings program. As discussed above, staff recommends modifying the rating scale to reflect the current and expected range of stability ratings between 1 and 2, also allowing for "2 or more," and decimals to indicate the range of ratings.

Comment: Lack of Uniformity Among CSUs

A manufacturer commented that CSUs are not homogeneous due to their design differences and styles, and it is not helpful to compare these different products with the same rating scale.

Response

Staff assesses that the performance test and resulting stability rating can be used as a tool that allows consumers to compare the units, regardless of their design and style.

Comment: Rating Scale Numbers

A trade association and a consumer advocacy group suggested that CPSC use whole numbers without decimals; the trade association referenced the contractor's finding from the previous research on ROVs to support this statement, noting that participants preferred whole numbers as anchor points and were confused by decimal points.

Response

Staff agrees that the data suggest that consumers prefer whole number scales. One option to mitigate this is to scale the rating by a factor of 10, so a 1.7 rating would be a 17; however, this obfuscates the meaning of the rating because, under the recommended rating system, a CSU with a rating of 2 is twice as stable as a CSU with a rating of 1. As such, providing the rating as staff recommends (*e.g.*, without multiplying it by 10) allows consumers to interpret the meaning as directly as possible. Therefore, staff does not recommend making a change in the proposed rating scale, and staff recommends specifying in the regulatory text that the rating must be displayed with "one significant digit (*e.g.*, X.Y)."

Comment: Rating Scale Rounding Requirements

A trade association observed that there were discrepancies in the rounding requirements for the rating calculation.

Response

To address the rounding requirement comment, staff recommends specifying in the regulatory text that the rating must be displayed with "one significant digit (*e.g.,* X.Y)."

Comment: Hang Tag Effectiveness

Several consumers questioned whether the hang tags would be noticed by consumers. To increase hang tag noticeability, one consumer suggested having warnings alongside the price tag; another suggested using a larger sticker to contain the hang tag information because consumers might pay attention to it because they would need to remove it from the product. A consumer and a trade association noted that stability is but one of the factors that consumers may consider, but it is not the most important consideration. One consumer said that the hang tag is not the same as the Energy Guide label, because the latter directly ties to cost. A consumer questioned whether consumers will understand the relationship between stability rating and tip-over risk. A trade association and a major manufacturer, raised the possibility that consumers may choose not to attach the CSU to the wall because they may have a false sense

of security due to the stability rating. Multiple trade associations suggested CPSC educate consumers to create awareness on the rating scale and what it means. A consumer suggested more attention-grabbing language, such as “below-average,” “average,” or “above-average,” for easy comparison.

Response

The purpose of the hang tag is to provide comparative information for consumers to make an informed choice. The hang tag includes additional information about making CSUs more stable, such as: “No unit is completely safe from tip over” and “Always secure the unit to the wall.” Staff identified format, size, and location requirements to improve the noticeability of the hang tag, such as requiring the hang tag to be placed *on* the product and measure at least 5 inches wide by 7 inches tall.

Comment: Hang Tag Placement

Some commenters suggested that hang tags should be placed at the point of sale, not on each unit. Another stated that many retailers sell CSUs in flat-pack packaging in retail stores, and it is not clear how and when consumers may get the chance to compare units. Several commenters stated that CSUs sold online should also have prominently placed stability ratings for consumers to compare across units, possibly in the form of a virtual hang tag. One commenter raised the issue of sale of used products and renters of furnished homes, who may not be privy to the rating scale. A commenter suggested a permanent sticker affixed to the CSU that contains the same information as the hang tag.

Response

Based on various comments raising the issue of consumers’ ability to review stability ratings when purchasing products online, staff recommends requiring the hang tag to be displayed on the websites that enable consumers to purchase a product online. This is consistent with the proposal in the NPR that the comparative information on the hang tag is necessary at the time consumers make buying decisions, which would include online purchases. Staff recommends requiring a “virtual” hang tag for online purchases, showing both the front and back sides. The purpose of this requirement is to ensure that consumers will be able to assess the stability ratings of the products that they are considering in the virtual environment, just as they are able to view the hang tag on the product itself, or in its immediate container when sold at brick-and-mortar stores. Additional details on this recommended requirement are in Tab E of this briefing package, including recommended requirements for online hang tag placement to ensure consumers will see the hang tag information at the time or purchase. Staff does not agree that the hang tag is only needed at the point of sale, and not on the product itself. Providing the rating scale directly on the unit and on the packaging at the point of sale will ensure that consumers see it, regardless of how the unit is available in the store (*i.e.*, assembled and displayed, or packaged) and will be the most direct way of communicating this information by minimizing confusion and allowing comparisons between units, side by side. Regarding the

comment on secondhand users, Section 27(e) of the Consumer Product Safety Act, under which the Commission may issue the hang tag requirement, only allows the requirement to apply to the first purchaser.

Interlocks (Tabs C, D, and H)

Comment

Several commenters, mostly representing manufacturers, stated that they do not support interlocks, and indicated reasons such as high cost, especially for small manufacturers, interlocks being intricate mechanisms that may be faulty or possibly break, and consumers' inability to install interlocks correctly. Some commenters stated incorrectly that the proposed rule would mandate interlocks. Some suggested that it should be up to the consumer how many drawers to open at one time. A trade association expressed concerns about higher shipping costs if ready-to-assemble (RTA) units are required to have interlocks pre-installed. The same trade association stated that because of the general conclusion that the drawers are likely to be filled, the test with interlocks appears to be too onerous because the NPR states that the drawers that are not opened are not to be filled if the interlock prevents more than half the drawers by volume from being pulled out. For these reasons, the commenter stated that the rule should allow for consumer installation of the interlock system for RTA CSUs. The commenter also stated that the consumer may not want the interlock and remove it, which will change the rating assigned to the CSU and inadvertently result in noncompliance.

A manufacturer commented that interlocks may affect doors and pull-out shelves, in addition to drawers, and therefore, the definition of "interlock" should be expanded to include these features, along with drawers. The same commenter stated that interlocks may consist of a system of devices, rather than a single device, so the definition of "interlocks" should be adjusted accordingly.

Regarding the pull test for interlocks, a trade association commented that the interlock test method does not specify where the force should be applied to the drawer. A trade association stated that retailers have reported that interlock systems fail over time, reducing their safety benefit and creating a service and repair component not considered in the NPR. A major retailer/manufacturer stated that the test should clarify whether a CSU that is intended to be attached to the wall should be attached to the wall during testing, and a trade association supported the degree of force recommended in the proposed rule.

Response

A detailed discussion of comments and recommended revisions regarding interlocks is available in Tab D of this briefing package. This response provides an overview. The proposed rule did not require interlocking drawers; rather, because interlocks are one of the ways to improve the stability of CSUs against likely interaction scenarios, the proposed rule included provisions to assess and accommodate interlocks if they are part of the CSU. The proposed requirements

are aimed to ensure that if a CSU relied on interlocks to increase stability, then the interlocks could withstand expected forces during use. The proposed requirements also aim to accommodate the use of interlocks, by specifying alternate fill requirements for stability testing, depending on the presence of interlocks. None of these provisions require the use of interlocks, and the test procedures in the NPR include provisions for CSUs without interlocks. However, based on comments, staff recommends clarifying in the rule that the interlock test only applies to CSUs with interlocks.

Regarding the comment on potential error in consumer assembly and allowing consumers to install interlocks as part of assembly, the proposed rule specified that the interlock components must be pre-installed, and they must engage automatically when the consumer installs the drawers in the unit. This requirement was included to limit the potential for consumer misassembly and increase the likelihood that these critical safety components are functional when consumers are using the CSU. For this reason, staff recommends retaining this requirement in the draft final rule.

In preparing the NPR, staff was only aware of the use of interlocks on drawers of CSUs. However, staff agrees that interlock devices could be used for doors and pull-out shelves, as well as drawers. If interlocks are used on doors or pull-out shelves, it would be important to assess their ability to withstand expected forces and to accommodate this feature for stability testing, for the same reasons explained in the NPR regarding drawers. Staff also agrees with the commenter that interlocks may consist of systems of devices, so the plural “devices” is more appropriate than the singular “device.” Accordingly, staff recommends clarifying the “interlock” definition in the draft final rule.

Staff notes that the interlock test method in the NPR did not specify where the force should be applied to the interlocked extendable element, and therefore, staff recommends clarifying that the pull test is conducted at the center of the pull area. Staff also recommends clarifying that the unit is not attached to the wall for testing.

Although staff is concerned by reports that interlocks can fail over time, staff has not observed these types of failures, and reports of the issue are limited in information. Staff is aware that the voluntary standard, ANSI/BIFMA X6.5-2022, includes performance requirements related to cyclic testing of drawers and interlocks. However, office furniture is potentially used differently than home furniture, in particular CSUs, and it is not clear to staff that these requirements would appropriately account for CSU use patterns over time. Staff will continue to monitor the issue, and the Commission could consider amending the rule, if necessary.

Stability Testing (Tab D and G)

Additional details about comments on the following topics, and staff’s responses and recommended revisions related to them, are available in Tab D of this briefing package. This section provides an overview.

Comment: CSU Assembly and Configuration

A manufacturer commented that the requirement to assemble the unit according to the manufacturer's instructions does not account for instructions that say to attach the unit to the wall. Staff received comments from a trade association that the angle of the test surface is critical to the test, suggesting the test allows too much variability. A manufacturer recommended testing when drawers are at the extended position, meaning the fullest extension allowed and remaining in place, to account for self-closing drawers and the difficulty for manufacturers to determine and communicate the recommended use position.

Response

In the NPR briefing package, Tab C, staff provided data and analysis that showed that consumer use of tip restraints is not high. Staff explained that the purpose of the rule was to ensure that CSUs have inherent stability, meaning that they should resist tipping without being attached to a wall. As such, the stability requirements were clearly intended to be performed without attaching the CSU to a wall. However, to address the comment, staff recommends clarifying that: "Units shall not be attached to the wall or any upright structure for testing."

The NPR proposed, as part of the test configuration, requiring testing to occur on a "hard, level, flat surface," which the NPR defined as sufficiently hard not to bend or break under the weight of the CSU and testing loads, smooth and even, and with no more than 0.5 degrees of variation. Other requirements in the testing provisions were designed and described as intended to test the CSU in the least-stable configuration. To address comments regarding the angle of the test surface, staff recommends clarifying in the draft final rule that the CSU is positioned on the test surface "in the orientation most likely to cause tip over" and that, if necessary, the CSU should be secured from sliding without preventing tip over. This is consistent with the configuration contemplated in the NPR and should address the commenter's confusion.

The NPR required that all extendable elements (not locked by an interlock) be open to their maximum extension in the configuration most likely to cause tip over. As the commenter noted, this may not account for self-closing drawers if such features are used to increase the stability of a CSU. Staff did not account for these features because of a lack of information about units with these features and the variability of these features. The performance of self-closing drawers depends on a variety of external factors, including tilt angle, force applied to the drawer, and whether the drawer can be propped or otherwise held in an open position during use. Self-closing drawer performance may also change over time. To accommodate these features, it would be necessary to have sufficient information to include requirements to ensure they function properly and serve their stabilizing purpose.

Comment: Fulcrum

Staff received several comments relating to measuring the fulcrum of the CSU consistently. One manufacturer said the fulcrum of the CSU may be affected by the test setup and will move during the test; accordingly, the commenter recommended evaluating the fulcrum position when

tip over occurs. The same manufacturer said it was not clear which distances to measure if a CSU had different drawers extending to different lengths. A trade association said the measurements to the fulcrum will vary due to the difficulty of acquiring them.

Response

Staff agrees generally that consistent measurements to the fulcrum are necessary, and staff provide a full response to these comments in Tab D. In response to these comments, staff recommends clarifying in the "fulcrum" definition that the fulcrum position is determined while the CSU is on a hard, level, flat test surface with all doors and extendable elements closed. This establishes a clear reference that can be used at any stage of testing, making the stability test more repeatable and reproducible. In addition, staff recommends specifying in Test Method 1 and Test Method 2 that the appropriate time to record the distance measurement to the fulcrum is before the load is applied. This will also make clear that the fulcrum measurements are taken before a tip-over force is applied.

Although the NPR did not specify in text which drawer extension distance to use on a unit with multiple drawer extensions, Figure 2 in the NPR clearly depicts the measurement to be to the longest extension. Staff recommends adding a step to the test stability test configuration requirements demonstrating the appropriate measurements to take to the fulcrum, as applicable.

Comment: Carpet

Several commenters supported a stability test accounting for placement of the CSU on carpet. Some commenters believed the test should be done on actual carpet or carpets of different styles, including rugs, or other surfaces, such as linoleum. Other commenters supported using a block in place of angling the CSU forward, to model behavior on carpet. Several consumer advocates did not support allowing leveling per the manufacturer's instructions for carpeting, as it could allow manufacturers to pass the test, while offering little additional protection to consumers who may not follow the instructions. One manufacturer proposed changes to the rule, based on allowing leveling per the manufacturer's instructions, but this manufacturer did not otherwise offer support for the provision.

Response

In Tab C of the NPR briefing package, staff concluded that the carpet used in CSPC staff testing was reasonably representative of carpets in incident data. This conclusion was based on pictures of carpet from fatal incidents, all of which appeared to be typical wall-to-wall carpet, and the vast majority of which was cut pile carpet, like the tested carpet. There were two reported incidents with CSUs on "shag" carpet, including one fatal incident, and one with a CSU on a rug. Analysis of new data in Tab C of this briefing package continues to support the conclusion that the carpet used in CSPC staff testing was reasonably representative of carpets in incident data.

As the NPR explained, carpet appears to contribute to instability more than harder surfaces, which would include linoleum. Staff's testing and incident data support this conclusion. As such, the testing in the draft final rule, which includes simulation of carpet, accounts for the least-stable flooring, making it unnecessary to also assess stability on other flooring surfaces.

Staff concluded in Tab D of the NPR briefing package that a 1.5-degree forward tilt angle would reasonably model CSU behavior on carpet, based on staff's testing.[12] After the NPR briefing package was published, ASTM F15.42 Furniture Subcommittee members analyzed the geometry of several CSUs, and the subcommittee members assessed that a 0.43-inch-thick block would model a 1.5-degree forward tilt angle for most units and would be easier to implement than a 1.5-degree angle. Subcommittee members included the 0.43-inch block in the balloted language for the ASTM F2057 voluntary standard. Staff reviewed the comments and the balloted language as part of their analysis, which is detailed in Tab D. Staff concludes that the 0.43-inch block is adequate to model the effect of carpet, as proposed in the NPR, and is easier to implement than angling the CSU 1.5 degrees. Staff recommends changing the forward tilt angle for the draft final rule to a 0.43-inch-thick test block placed at the rear of the unit.

Staff agrees that the provision in the NPR stability test, allowing leveling per the manufacturer's instructions for carpeting, could result in cancelling out the angle that is intended to simulate carpet, which is problematic because this is a factor that contributes to instability in real-world use. Moreover, it is foreseeable that consumers would not follow the manufacturer's instructions to adjust CSUs for use on carpet. As such, the leveling for carpet that was in the NPR could undermine the stated purpose of the NPR and this provision, which is to simulate the effect of carpet during testing, as well as adequately assess the stability of CSUs during real-world use conditions. Therefore, staff recommends removing this provision from the final rule.

Comment: Fill Weights

Staff received several comments from a trade association related to the fill weights and how they can affect the repeatability and reproducibility of the test. The commenter identified the tolerance of the fill weight, the fill weight position, and the measurement of the drawer volume as critical factors affecting repeatability and reproducibility. A manufacturer commented that the fill weight position could be clarified as the center of the bottom surface of the drawer or pull-out shelf. Other commenters said more generally that the fill weight position should be clarified.

[12] Mella, L., Newens, A., Taxier, D. (2021.) Tab M: Mechanical Evaluation and Analytical Modeling of Incident-Involved Clothing Storage Units. Staff Briefing Package: Draft Notice of Proposed Rulemaking for Clothing Storage Units. U.S. Consumer Product Safety Commission, Bethesda, MD. Available at: https://cpsc.gov/s3fs-public/Proposed%20Rule-%20Safety%20Standard%20for%20Clothing%20Storage%20Units.pdf.

Response

The NPR specified that for stability testing, a fill weight "consisting of a uniformly distributed mass in pounds that is 8.5 (pounds/cubic foot) times the functional volume (cubic feet)" must be placed in the center of each drawer or pull-out shelf. This applied to CSUs without interlocks, CSUs with interlocks that do not withstand the interlock testing, and CSUs for which 50 percent or more of the drawers and pull-out shelves by functional volume can open simultaneously. The NPR further specified to secure the fill weight from sliding. As the NPR explained, the purpose of this fill weight is to simulate the presence of clothing in CSUs, which contributes to instability when filled drawers are open, and contributes to stability when filled drawers are closed.

Regarding fill weight tolerance and amount, as the commenter noted, slight variations in fill density can affect stability testing results. The NPR did not specify a tolerance range for the proposed fill density of 8.5 pounds per cubic foot. To provide a tolerance for fill density and to ensure that 8.5 pounds per cubic foot remains the minimum, staff recommends stating in the draft final rule that the fill density is "at least 8.5 (pounds/cubic foot)." That will allow manufacturers and test labs to use a greater fill density to accommodate variation.

Staff notes that the trade association provided a laboratory test report that analyzed the effects on fill weight of measuring the drawer to different precisions. Although the report noted that rounding the drawer measurements could affect the stability rating by 4 percent to 9 percent, the report also included the drawer's "true measures." Staff concludes that test laboratories have the ability to measure drawer dimensions to a suitable precision to determine accurately the fill weight. Manufacturers and test labs should consider using additional fill weight to ensure compliance.

Fill weight placement. Based on the analysis in Tab D, staff recommends clarifying that the fill weight shall be positioned at the "center of the bottom surface of the extendable element," as suggested by the commenter and to remain consistent with the definition of functional volume. Manufacturers and test laboratories should consider positioning the fill weight in a manner that will ensure compliance; that is, shifted towards the front of the drawer or pull-out shelf.

Securing fill weight. Staff notes that, although three provisions in the NPR required the fill weight (CSUs without interlocks, CSUs with interlocks that don't pass interlock testing, and CSUs without interlocks when more than half of drawers are open), the requirement that the fill weight be secured to prevent sliding was present only in one of these sections of the NPR. Staff first recommends removing redundant requirements to reduce the occurrence of this type of error. Staff has also observed during testing that it is not always necessary to secure the fill weights to prevent sliding, although it can be helpful at times. Requiring the fill weights to be secured when it is not necessary could be considered onerous. Also, a sliding fill weight will tend to slide forward and reduce the tip-over moment (and reduce the likelihood of passing the test), rather than increase the tip-over moment. Therefore, staff recommends allowing the fill weights to be secured in the relevant test sections, rather than require the fill weights to be secured.

Comment: Test Method 1 and Test Method 2

Several commenters were concerned with the repeatability and reproducibility of Test Method 1 and Test Method 2. Several of these commenters said the test methods are subjective, based on who is performing the test. Several manufacturers and trade associations commented that Test Method 1 and Test Method 2 had substantially different results, and these commenters raised concerns about the enforceability of the rule. Some commenters supported choosing one test method over another. For example, Test Method 1 received some support from consumer advocates because it was closest to the methodology used in the ASTM stability test. In contrast, Test Method 2 received some support as the "only consistently viable test method," because there were concerns about the test resulting in broken drawers. Other specific comments regarding Test Method 1 and Test Method 2, and staff's responses to those comments, can be found in Tab D.

Response

The NPR includes two stability test methodologies. In Test Method 1, an extended drawer or pullout shelf is loaded vertically to produce a tip-over moment. In Test Method 2, the rear of the CSU is loaded horizontally to produce a tip-over moment. The NPR left open the exact methodology for applying the force in these tests. In Tab D of the NPR briefing package, staff reported that the tip-over moment results using a vertical load, compared to the results using a horizontal load, were approximately equal. While the method of applying force was left open to testers to select in the NPR, when CPSC staff conducted the vertical load testing, they used the same system of weights for testing to failure described in Tab N of the NPR briefing package,[13] while horizontal load testing was conducted using a force gauge by hand. This testing methodology was demonstrated by CPSC staff in a video presented at the NPR Commission Briefing.[14]

Staff reviewed a laboratory test report that two trade associations referred to in their responses. The report contained test data for each of the test methods, and it compared results for the test methods when conducted with a force gauge by hand, with weights (Method 1 only), and by machine. For testing by hand, the report stated: "Variation coefficient for method 1 (3.5% to 7.0%) are almost twice higher then (sic) variation factors for method 2 (2.0% to 4.5%)," and most of the variation was attributed to human operator(s) doing the testing by hand. The report suspected one operator was testing faster than the others, introducing some bias to the results. The report concluded: "As often as possible, static load [weight] on the drawer front must be

[13] Sanborn, M. (2021). TAB N: FY 2018 Midyear Clothing Storage Unit Testing Program Summary. Staff Briefing Package: Draft Notice of Proposed Rulemaking for Clothing Storage Units. U.S. Consumer Product Safety Commission, Bethesda, MD. Available at: https://cpsc.gov/s3fs-public/Proposed%20Rule-%20Safety%20Standard%20for%20Clothing%20Storage%20Units.pdf
[14] CPSC (2021). CPSC Commission Briefing | Clothing Storage Units Tipovers Notice of Proposed Rulemaking. December 3, 2021. Video available at: https://www.youtube.com/watch?v=LIY1wfyOwDk&list=PLPbI8bR243fHmCYA1a7pZ4l4wzhYjla_V&index=14.

preferably used." The report said that when Test Method 1 was conducted with weights, there was only a 3 percent difference from Test Method 2 conducted by hand.

Staff agrees with the report's conclusion that using weight is preferable because it does not introduce as much human error, and staff recommends revising Test Method 1 to specify that the force be applied to the drawer front or pull-out shelf with weight. However, test weights may not be appropriate to test CSUs with short or no extendable elements, so Test Method 2 must still be included. Based on staff's assessment of Test Method 2 and other furniture stability tests conducted with a horizontal force in Tab D, staff recommends allowing the test to be conducted with a horizontal push force or pull force to the location of the tester's choice. The appropriate force application method and location may differ, depending on the unit design, and this will allow test laboratories the flexibility to determine the best method to apply a force when using Test Method 2 for each unit.

The laboratory test report's findings that there was only a 3 percent difference when comparing Test Method 1, conducted with weights, to Test Method 2, conducted by hand, is in line with staff's own findings in the NPR that the two methods produce approximately equal tip-over moments. Staff, therefore, disagrees with comments that the two test methods produce substantially different results. However, the two test methods do at times result in minor differences. To avoid different results based on using a different test method, staff recommends that CSUs be tested using only one test method. Based on the analysis in Tab D, staff recommends that Test Method 1 apply to CSUs with extendable elements that extend at least 6 inches from the fulcrum, and Test Method 2 apply to all CSUs for which Test Method 1 does not apply.[15]

Staff agrees that broken or failed components are a concern. To ensure that test laboratories have all of the necessary tools to address the situation when a component fails, staff recommends revising the language regarding failed components to match more closely the language in ASTM F2057 – 19 section 4.3. Staff also recommends applying this language to both test methods.

Comment: Clothing-Representative Loads

A commenter from a trade association questioned the requirement of testing interlocked units empty if less than half of the drawers and pull-out shelves by functional volume are open, since drawers are likely to be filled. The commenter also stated: "[s]ince the closed storage is used to determine if the unit is a CSU, it should also be considered for testing."

Response

The NPR and draft final rule require that if 50 percent or more of extendable elements by functional volume are open, then a fill weight is placed in each extendable element (both the open ones and the closed ones) for testing. If less than 50 percent of the extendable elements

[15] For reference, the shortest drawer extension measured by staff in the NPR was 0.53 feet (6.38 inches).

by functional volume are open (because of interlocks), then the CSU is tested empty. Staff designed these clothing fill requirements to represent reasonable worst cases for stability. As testing in the NPR briefing package explained, open and filled extendable elements contribute to instability, while closed and filled extendable elements contribute to stability. Incident data also illustrate that tip-over incidents occur both when CSUs are filled with contents, and when the CSUs are empty. The fill requirements in the draft final rule account for all of these considerations. The filled testing requirements account for the reasonable worst-case stability when the CSU is filled with clothing, and half or more than half of the extendable elements are open. Staff considers it most likely that if a consumer fills a CSU, the consumer will put contents in each extendable element, so the testing reflects this, by requiring contents in both open and closed extendable elements. The all-empty testing requirement represents the reasonable worst-case stability when a CSU is empty, and less than half of the extendable elements are open. Regarding non-extendable closed storage, like that behind doors, ESHF staff assesses consumers will not necessarily fill the storage the same amount as the extendable elements, because non-extendable closed storage is a different kind of storage space. Therefore, leaving these spaces empty is a reasonable worst case, even when extension elements are filled.

Comment: "Tip Over" Definition

A manufacturer commented that the definition of "tip over" does not encourage innovative designs that intentionally use extension elements to stabilize the CSU and prevent tip overs. The manufacturer recommended using a definition more consistent with the one used in ASTM F2057 – 19. A voluntary standards organization noted that one side of a unit may lift from the floor before the other side, and therefore, this commenter recommended using instead a definition consistent with the ANSI/BIFMA standard. Other commenters said that the ¼-inch height is difficult to measure during the test.

Response

Staff agrees with the comment that the definition of "tip over," which was determined by the rear of the CSU lifting at least ¼-inch off the ground, could disadvantage CSUs with features on extendable elements or doors designed to prevent tip overs; moreover, the measurement may be too difficult for certain testers, test methods, or CSU designs. A detailed response to these comments can be found in Tab D. In response to these comments, staff recommends revising the definition of "tip over" to be consistent with other voluntary standards that industry members are already familiar with complying; *i.e.*, an event at which a clothing storage unit pivots forward to the point at which the CSU will continue to fall and/or be supported by a non-support element.

Comment: Unit Systems

Commenters said all distance values should be reported in inches or feet, and all units should also be reported in metric units.

Response

In the NPR, distance measurements related to stability testing are consistently required in feet; whereas, other distances are required in inches. Staff considers these different scales of measurement appropriate for their usage. Additionally, staff does not agree that values should be reported in two systems of units. Although conversions between unit systems are well established, the conversion process means that any values reported in the metric unit system (or the system converted to) would be for reference only, and they would add little value to the draft final rule.

Comments: Interlaboratory Study

A trade association commented that the test methods should be evaluated using ASTM E691-19e1 *Standard Practice for Conducting Interlaboratory Studies to Determine the Precision of a Test Method.*

Response

Staff determined that most tests labs are familiar with measuring the stability of a product. For example, products such as high chairs, baby walkers, and other common household furniture require a stability test that applies force to induce tip over. ASTM F2057 – 19 and other tests in ANSI/BIFMA X6.5-2022 also require application of weights or forces similar to the proposed tests in Test Method 1 and Test Method 2. Since the recommended tests use common test methods, do not require complex or new technologies, and are similar to existing voluntary standard test methods, staff concluded that an interlaboratory study was not necessary. Staff has recommended several changes in response to public comments and elsewhere in this package that will clarify the minimally acceptable level of compliance with the draft final rule. To ensure compliance with the rule, manufacturers and test laboratories can test beyond the minimally acceptable levels set forth in the draft final rule, and manufacturers can consider the expected or possible variability introduced by the manufacturing methods and materials used in their designs.

Voluntary Standards (Tab F)

Comment

Several commenters expressed support for CPSC rulemaking, citing failure of the voluntary standard to adequately account for carpeted surfaces, filled drawers, multiple drawers, and child interactions. However, a few commenters expressed opposition to CPSC rulemaking, suggesting either the current voluntary standards (ASTM F2057 and ASTM F3096) are adequate, and the incidents reported are from noncompliant CSUs, or suggesting that CPSC staff follow the ASTM process and allow for the F15.42 subcommittee to approve the latest revision. A trade association commented that CPSC has not provided information on whether the incident-involved units complied with the existing ASTM F2057 – 19 voluntary standard.

Response

CPSC staff has worked closely with the ASTM F15.42 Furniture Subcommittee over the years to effectuate improvements in the voluntary standards. However, for the reasons outlined in this briefing package, staff recommends that the Commission issue a final rule for CSUs. Staff agrees with the commenters who asserted that ASTM F2057 – 19, *Standard Safety Specification for Clothing Storage Units*, does not adequately reduce the risk of injury associated with CSU tip overs, because the Standard does not account for the dynamic forces created from children climbing CSUs, and the other factors discussed in the NPR. The University of Michigan Transportation Research Institute (UMTRI) child climbing study[16] showed that children climbing CSUs can impart moments on CSUs beyond the forces of a child's static weight on an open drawer, and such moments can cause the CSUs to tip over. Additionally, the ASTM standard does not account for multiple open/filled drawers or carpeted surfaces, which the testing and incident data indicate contribute to instability. Details regarding the inadequacy of ASTM F2057 – 19 are in Tabs D and F of the NPR briefing package, and Tab F of this briefing package.[17]

Staff disagrees with the commenters' statements that the main issue with CSUs tipping over is CSUs' noncompliance with ASTM F2057 – 19. In Tab F of the NPR briefing package, staff analyzed CSU tip-over incidents to determine whether CSUs involved in tip-over incidents complied with the requirements of ASTM F2057 – 19. Staff updated these data in Tab F of this briefing package, to include new data received since the data from the NPR briefing package. Overall, staff identified two fatal incidents and 50 nonfatal incidents involving children and CSUs without televisions in which the CSUs complied with the ASTM F2057 – 19 stability requirements. In the new data, there were approximately three times as many incidents with units that met the requirements in ASTM F2057 – 19 than units that did not meet the requirements. The high number of incidents involving units that meet the ASTM F2057 – 19 requirements reinforces staff's conclusion that the standard is inadequate to address the tip-over hazard.

Staff has actively worked with the ASTM subcommittee to revise ASTM F2057 – 19. However, staff has several reservations regarding the ballot items proposed for the latest revision to ASTM F2057, and staff provided the ASTM subcommittee statements with negative votes on several items (see Tab F Appendix F2). As of September 28, 2022, ASTM has not published a new version of the standard. Because several years have elapsed and ASTM has not succeeded in updating its standard to include requirements that are likely to adequately address

[16] CPSC Staff (2021). Staff Briefing Package: Draft Notice of Proposed Rulemaking for Clothing Storage Units, Tab R. July 2021 Available: https://cpsc.gov/s3fs-public/Proposed%20Rule-%20Safety%20Standard%20for%20Clothing%20Storage%20Units.pdf?OcybMVfa9ANi6sqiog7qkeNP48c_uz0T.

[17] CPSC Staff (2021). Staff Briefing Package: Draft Notice of Proposed Rulemaking for Clothing Storage Units, Tab F. July 2021 Available: https://cpsc.gov/s3fs-public/Proposed%20Rule-%20Safety%20Standard%20for%20Clothing%20Storage%20Units.pdf?OcybMVfa9ANi6sqiog7qkeNP48c_uz0T.

the risk of injury associated with CSU tip-overs, staff does not recommend waiting for future ASTM work, and would rather proceed with rulemaking.

Economic Analysis (Tabs H and I)

This section summarizes and responds to comments on the Preliminary Regulatory Flexibility Analysis, including the specific comments about costs to small business, and Preliminary Regulatory Analysis, including the general benefits and costs associated with the draft final rule for businesses of all sizes. Tab H of this briefing package contains the Final Regulatory Analysis, and additional details are available in that memorandum. Tab I of this briefing package (the Final Regulatory Flexibility Analysis) responds in detail to comments from the U.S. Small Business Administration's (SBA) Office of Advocacy (Advocacy) regarding costs to small businesses. Because there is some overlap in the costs associated with the draft final rule for small and larger businesses, and some small business individual commenters overlapped with comments from Advocacy, there is some overlap in the discussion of these comments in this section and Tab I of this briefing package.

Comment: Cost of Compliance with the Rule for Small Businesses

Various commenters provided general information about the cost of compliance with the rule for small businesses, and a few provided specific data. As noted above, Advocacy's comments are also discussed in detail in Tab I.

Advocacy provided information, based on input from multiple small manufacturers and importers, that costs of compliance with the rule would raise the cost per unit by 30 percent to 44 percent, and that such costs would put small manufacturers and importers out of business. Advocacy did not provide a detailed breakdown of the additional cost estimates provided by the small manufacturers, nor did Advocacy specify why this potential increase in manufacturing costs could not be passed on to retailers and consumers.

Advocacy indicates that nearly all non-upholstered furniture manufacturers, furniture wholesalers, and furniture store are small businesses by the SBA size standards, and half of them have fewer than five employees. Another commenter, an industry association representing retail furniture stores, also noted that the industry, including the wholesale vendors, is made up almost entirely of small businesses, and that the NPR represents "a significant threat to business survival." They noted that the rule will require small retailers to restock their entire inventory of CSUs, at great cost, and that heavier items will require these small retailers to incur additional costs for "last mile" delivery to customers. Several additional commenters representing small businesses also noted that modifications to comply with the rule would likely involve added weight, thereby, increasing shipping and delivery costs, and likewise, they asserted that the Preliminary Regulatory Flexibility Analysis underestimated these costs.

A small importer commented that packaging costs would go up 11 percent, additional materials to meet the standard would raise costs 33 percent, and adding in the testing costs would raise

the total cost of compliance more than 50 percent above current costs. This commenter also raised the issue of costs of scrapping obsolete product.

Several commenters also stated that the Preliminary Regulatory Flexibility Analysis focused on interlocks as a possible modification to comply with the draft final rule, but that the analysis underestimated the costs associated with interlocks, and similarly, underestimated that supply chain issues and hyperinflation may impact the viability of using these features.

Several individuals raised issues about possible small business impacts. One individual noted that large manufacturers would be able to spread the cost of new technologies over many units, which would disadvantage smaller manufacturers. This comment referred specifically to interlocks. A similar comment noted that requiring interlocks would disadvantage smaller manufacturers, due to manufacturing complexity and supply-chain issues.

Response

The Final Regulatory Flexibility Analysis (FRFA) (Tab I) and Regulatory Analysis (Tab H) have been revised to reflect these and other commenters' input on costs of compliance. While commenters did not provide data to demonstrate these higher costs would fall disproportionately on small businesses rather than large ones, it is certainly plausible that economies of scale do apply, so that large businesses would have cheaper costs for inputs than small ones, and large businesses would be able to spread the cost of testing over more units. Although commenters did not agree on how much of the cost increase would be passed on to wholesalers and retail consumers in the form of higher prices, we have added discussion in the Regulatory Analysis that accounts for the higher prices at both the wholesale and retail level, including deadweight losses from some manufacturers exiting the market.

Advocacy did not provide any specific breakdown of costs to small manufacturers, importers, or retailers from testing, parts and labor for redesign, packaging, and shipping. This estimate of a 30 percent to 44 percent increase in manufacturing costs is on the high end of the range of estimates provided by other commenters, primarily trade associations and large businesses, which did provide a breakout of costs for components, redesign, shipping, and packaging. The cost estimates in comments that included a sizeable increase in the costs of shipping and packaging assumed that compliance with the standard is achieved by adding weight to the CSU, which is not required by the draft final rule. The draft final rule is a performance standard, not a design standard. Suppliers can rationally select the least-costly option to achieve compliance, which, in some cases, will be drawer interlock hardware or foot extensions that add minimal weight to the unit, or one of those options in combination with added weight. Many inexpensive units are already made of relatively heavy manufactured wood products. Redesign may involve shifting weight distribution among components, such as heavier back panels and lighter drawer fronts, rather than increasing the total weight. Thus, there are many options to achieve compliance, where shipping and packaging cost increases could be minimized through efficient redesign.

The performance and labeling requirements in this rule do not apply to retailers unless the retailer is also a manufacturer or importer. On requiring small retailers to restock their entire inventory of CSUs, the rule applies to CSUs manufactured after the effective date. Retailers would still be allowed to sell down their existing stock of noncompliant CSUs manufactured (domestically or abroad) before the effective date. Thus, there would be no need to send "obsolete" units to the landfill, unless they were unlawfully manufactured after the effective date, or manufactured in violation of the stockpiling provision of the final regulation.

Comments by larger businesses and trade associations indicate that they expect retail prices to rise to cover most, if not all, of the additional manufacturing cost, or even rise multiples over the manufacturing costs to maintain supplier profit margins, and wholesaler/retailer markups. Thus, staff and other commenters do not concur with Advocacy's assumption that none of the cost of compliance can be passed onto wholesale or retail customers in the form of higher prices. The draft final rule performance standards apply equally to all furniture manufacturers, large or small. Manufacturers may face increased production costs due to the rule, and it is likely that most, if not all of them, will be able to raise wholesale prices to cover a significant portion of the compliance costs, while maintaining healthy profit margins. With more than 97 percent of the industry being small businesses, there is no indication of significant market power by any firm; so an increase in the cost of production should affect most businesses in a similar fashion. Smaller firms should also be able to pass a significant part of the cost of compliance on to retail customers. In a competitive market such as this, with such a large share of small businesses participating in production and distribution, the inability to pass on a significant share of the cost to consumers would occur only if demand for the product were highly elastic (a price increase would cause demand to drop sharply), which is unlikely the case for furniture. We assume in the Final Regulatory Analysis that both small and large manufacturers and importers will be able to pass on some or all of the compliance costs of the rule, by raising prices.

In addition, a U.S. industry trade association commenter noted that more than 90 percent of CSUs sold in the United States are imported; and a foreign trade association commented that about 90 percent of their product ships to the United States. This most likely means that few U.S. manufacturers will directly bear the cost of redesign or testing, which instead, will fall on foreign manufacturers, although these costs will likely be reflected in increased wholesale prices. As is the case currently, the wholesale cost of imports will reflect the production costs in foreign countries. Small importers will be able to choose a compliant foreign supplier for their products, rather than incur the cost of redesign themselves. Given that foreign manufacturers should already be testing their products to the voluntary ASTM standards and the CPSC regulation for lead paint content in general-use furniture, it is unlikely that the new testing required by this rule will significantly raise wholesale costs. In addition, redesign will be a one-time cost, not an ongoing cost, which can be spread across many units by the manufacturers, and some models may require only limited redesign.

On specifics of shipping costs, staff included the cost of shipping in the estimate of added weight of 24 cents per pound in the Preliminary Regulatory Analysis that accompanied the NPR. As noted in the staff analysis, that cost was based on the **retail** price of medium-density

fiberboard (MDF), so it included the cost of shipping MDF to a manufacturer's point of purchase. Wholesale costs for MDF to furniture manufacturers either in the United States or abroad should not be greater than the U.S. retail price of the material, including shipping to final consumer points of purchase. We received no comments that CPSC staff's estimate of cost-per-pound for MDF was inaccurate. Again, adding weight to the unit is not required by the draft final rule, and suppliers are free to choose a different compliance method that does not add significant weight to the unit, such as drawer interlocks or foot extensions, or a combination of methods where added weight is not the only technique used to achieve compliance. Although shipping costs have increased during the pandemic, as have the prices of wood products, these increases were not caused by the rule. Moreover, the increases may reflect temporary disruptions to the supply chain, so shipping and input costs could fall in the future, as supply chains resume more normal operations.

On the issue of economies of scale for drawer interlocks, and for compliance in general, the proposed standard is a performance standard, not a design standard. Interlocks are one of the alternative methods that may be used to achieve compliance. Manufacturers are not required to use them to achieve compliance, and they are free to use a less expensive design or method, including, but not limited to, the designs or methods discussed in the NPR briefing package to achieve compliance. If there is increased demand for interlocks, the supply chain should be able to produce those relatively simple components to meet the demand, without significant delays or new investments in capital equipment. Manufacturers large and small would likely buy these components from vendors, and they should be able to source these components for similar prices. Although it is possible that large manufacturers would have a lower cost per-unit for the components, no small manufacturers provided specific price data on this issue, and this rule does not impact any existing market power of larger suppliers to obtain inputs at lower prices.

Comment: Specific Ways CPSC Could Reduce the Burden of the Rule on Small Businesses

Several individuals suggested ways that CPSC could reduce the burden on small businesses. A commenter suggested revising the rule to omit the stability ratings, because the commenter stated that the big foreign businesses would be able to make dressers with a 5 rating, while small domestic manufacturers might only be able to afford the modifications to get a 1 rating. This commenter stated that customers wouldn't understand that a rating of 1 is also safe, and therefore, they would buy the imported one with a rating of 5instead of a domestic one with a 1 rating. Similarly, another individual commented that the effective date would impact smaller manufacturers more than large ones, because large manufacturers would have the resources to comply more quickly. Another individual commenter stated that more stringent stockpiling requirements were needed, because big businesses have more resources to stockpile than smaller ones. Advocacy suggested a later effective date to allow small businesses to deal with supply chain issues.

Response

No commenters that identified as small businesses or small business advocacy groups suggested that the alternatives proposed by the individuals would reduce the burden on small businesses. The commenters did not provide data to support the theoretical burden-reduction alternatives. For example, on the issue of stability ratings disproportionately impacting small business, the commenter was not a small business and did not provide data to support the theory that small manufacturers could not achieve a 5 rating, nor why it would cost such a small business more per unit to achieve a 5 rating than a large business. However, in response to these and other comments about the hang tag ratings, staff now recommends a rating scale with a lower maximum rating. On the issue of stockpiling, or the effective date disproportionately burdening small business, no commenter identifying as a small business provided data to support this claim.

Given that most CSUs are imported, not manufactured in the United States, there is no reason small importers would find the effective date more burdensome than large importers. Both large and small importers are buying from foreign manufacturers, and they will not bear the burden of redesign and compliance testing themselves. A shorter effective date could disproportionately benefit small U.S. manufacturers, who will have shorter shipping times for units manufactured in the United States that are compliant with the rule, than importers of any size. However, staff recommends changing the effective date from 30 days to 180 days, based on comments from manufacturers of all sizes. (See comment/response on the Regulatory Impact Analysis below for more discussion of the impact of the effective date on businesses of all sizes.) These comments and staff's response are discussed below.

Preliminary Regulatory Analysis (Tab H)

We received extensive public comments on the costs and benefits of the rule, as analyzed in the Preliminary Regulatory Analysis that accompanied the NPR. We have revised the Final Regulatory Analysis (Tab H) to reflect these comments. Specifically, we have added discussion in the sensitivity analysis section about the impact of different assumptions about costs and benefits. We have also added discussion of potential reductions in consumer utility from higher retail prices, and the likelihood that some manufacturers will exit the market because the rise in retail prices will not be enough to cover their costs of compliance. Comments on costs are discussed first, then comments on benefits and other issues with the Regulatory Impact Analysis follow.

Comment: Costs of Compliance for Manufacturers and Importers

Various commenters--primarily large businesses and industry trade associations, provided specific details on their estimated costs to comply with the draft final rule. The upper end of the range of these specific costs was higher than in the RIA. However, these high-end costs assumed that compliance would be achieved primarily by adding weight to the CSUs.

A large importer commented: "The cost of compliance in the proposal seems to grossly underestimate the actual cost to comply with the rule. The estimates are low for the actual production cost, which is likely to increase more than $15, and sometimes over $30, without adding in any other costs. Costs such as increased freight and parcel shipping costs on RTA units have been ignored, in some instances ocean freight is estimated to increase $10 per unit alone to become compliant, with another $10 or more added to the parcel shipping cost due to the increased size and weight. This may be compounded further for items that are not currently within scope of ASTM F2057 like most nightstand items."

Another large importer noted that the increased costs of production will be passed on directly to consumers in the form of higher retail prices for CSUs, adding that "Even at modest profit margins, a $15 increase in production cost per unit could lead to a total cost to consumers of more than $1.3 billion per year before delivery increases for the larger cartons and excess weight are factored in; this could easily push past $2 billion total."

An industry trade association commenter submitted a detailed breakdown of costs from compliance, and also calculated the average cost of compliance at $47 per unit for wholesalers, or about $2 billion annually for the entire industry, based on input from its members. This commenter estimated an even higher cost increase for retail customers, closer to $3 billion total annually, or closer to $68 per unit.

Another industry trade association for retailers provided specific information that the cost increase for a large manufacturer would be 20 percent to 48 percent. Based on a retail price of $335 provided by that commenter, the retail price would increase by $67 per unit to $161 per unit. Another association provided information that a cost increase to the manufacturer of under $100 would be reflected in a retail price increase of more than $300.

Response

As these comments indicate, many commenters based their cost estimates on the assumption that CSUs would be modified to comply with the draft final rule by adding weight to the units. However, this is not required by the draft final rule. The draft final rule is a performance standard, not a design standard, and numerous modifications can be used to comply with the draft final rule. Several commenters even noted alternatives to adding weight, such as reducing drawer extensions, or raising the front legs.

These estimates of cost from large manufacturers and some of the industry trade associations are somewhat lower, but they are generally consistent with Advocacy comments suggesting that costs might rise 30 percent to 40 percent for small manufacturers and retailers. ($47 would be about one-third of the price of a unit that wholesales for $150, but far less for a $300 unit.) We have updated the Final Regulatory Analysis to discuss that costs will likely be higher for both wholesale and retail consumers, reflecting information provided in the public comments.

A few of the estimates were much higher than in the Preliminary Regulatory Analysis, particularly the ones estimating price increases for consumers at more than $100 per unit.

Retailers are free to adjust their price by greater than $100 to cover their wholesale cost, and to maintain their profit margin. This draft final rule does not have any requirements that apply to retailers unless the retailer is also the importer or manufacturer. As discussed in the Preliminary Regulatory Analysis, it is typical for retail prices to be a multiple of wholesale costs. However, retail price increases that greatly exceed the wholesale cost increase should not be regarded as an inevitable consequence of this rule.

While we have revised the Final Regulatory Analysis to discuss a higher range of possible compliance costs, based on public comments, some of the cost estimates provided by commenters, particularly on shipping costs, are not well supported by data or explanations. The draft final rule is a performance standard, not a design standard; so nothing in the rule requires a manufacturer to use a more expensive-weight material. We received no comments on the estimated price of MDF in the NPR RIA, which was 24 cents per pound. Similarly, nothing in the draft standard requires the manufacturer to use **any** added weight to achieve compliance. The Regulatory Analysis estimates shipping costs at 16 cents per pound, based on multiple sources. If shipping and packaging costs are truly as burdensome as some commenters estimated, then a rational supplier would likely choose a less costly compliance method, such as drawer interlocks or foot extensions, or some combination of methods that would not rely solely on an increased weight of the unit. Both the Preliminary Regulatory Analysis that accompanied the NPR and the Final Regulatory Analysis in Tab H discuss multiple compliance scenarios that estimate the cost of compliance when multiple changes to a single unit would be used to achieve compliance. Although shipping costs did, in fact, increase during the past few years, as did the prices of some wood products, that was not a result of the draft final rule, and it likely reflects temporary disruptions to supply chains.

Comment: Costs to Consumers Could Be Higher or Lower than Estimated in the Preliminary Regulatory Analysis

Commenters provided differing views of how the rule would impact the cost of retail units for consumers, reflecting different views of the market power of suppliers, and of elasticity of demand.

An industry trade association noted that the costs to consumers will be much higher than the cost increases to wholesalers or manufacturers. They cited specific examples in which a compliance cost of under $100 would raise the retail price by more than $300, nearly doubling the retail price in some cases, and more than doubling the price in other cases. Other commenters, including Advocacy, assumed that businesses would not be able to pass any of the manufacturing or testing costs on to consumers, or that (as noted above) the cost to consumers would rise by about $68 a unit. Thus, the range of estimated retail price increases for consumers provided by commenters ranged from roughly zero to more than $300 a unit.

Response

We have updated the Final Regulatory Analysis to discuss the potentially higher retail prices for consumers, reflecting the input of these commenters. Assuming that demand for CSUs is somewhat elastic, we have also added a discussion of reduced consumer utility and deadweight loss derived from a potential reduction in the total market for CSUs due to higher retail prices.

It is reasonable to expect an increase in the average price of CSUs during the first few years after the draft final rule becomes effective, as compliance with the draft final rule will require modifications to the units themselves and some changes in the production process. (As discussed in the Final Regulatory Analysis, costs will likely fall over time due to economies of scale and new methods to achieve compliance.) However, CPSC staff does not expect as large an increase in the average retail price as expressed by some commenters. The industry has a demonstrated the ability to produce efficient designs, and there is no reason to believe this will change. We expect that, over time, suppliers will learn the most cost-effective way to comply with the rule, including innovative designs and technologies, so that the cost of compliance will decline over time. Economies of scale also apply, so that the cost of compliance for suppliers, and the cost to consumers, also will likely decline over time. A major supplier of inexpensive, ready to assemble (RTA) furniture expressed an intent to comply with the regulation in their comments and did not voice concerns about the cost to comply. The draft final rule now excludes certain lightweight units from the scope, and lighter weight units often are expected to be inexpensive; the prices for those units, therefore, should not rise as a result of the rule. The lightweight units excluded from the scope of this rule represent about 10 percent of the total U.S. market for CSUs. While retailers are free to raise their prices to maintain or even increase profit margins above wholesale cost, any increase in retail prices that greatly exceeds the actual cost of compliance should not be regarded as an inevitable consequence of this rule.

Comment: Costs of Complying with ASTM Standard, Compared to Costs of Complying with the Rule

One manufacturer argued that the estimated costs to redesign were too low and provided specific information indicating that they had already spent nearly $50 per unit to meet the current ASTM standard. An industry trade association provided specific examples of the costs of complying with the ASTM standard vs. complying with the CPSC draft standard.

Response

The cost of a rulemaking proceeding for the purposes of a regulatory analysis is the *incremental* cost of the rule's requirements above what would occur without the rule. Therefore, the costs to any manufacturer to comply with the voluntary ASTM standard were appropriately not included in our cost estimate of what it would cost to comply with this draft final rule. Also, we cannot estimate what the cost would be above the cost to comply with a revised ASTM standard, because the standard is not yet completed, and there is no guarantee that it will be published or what it would require if published.

The Preliminary Regulatory Analysis for the NPR considered the alternative of mandating the ASTM standard, or mandating the ASTM standard with a higher test weight, and staff found that the reduction in benefits compared to the draft final rule, would likely be greater than the reduction in compliance costs. However, that analysis was based on the currently published ASTM standard, without the revisions now under consideration.

Staff has also analyzed the new version of the ASTM standard currently under consideration (see Tab F). As currently proposed, that standard would not adequately address the stability hazards as this rule, and the standard would provide fewer hazard-reduction benefits than this rule, particularly since it would still be a voluntary standard and compliance, therefore would be voluntary. Thus, the ASTM standard currently under consideration is less cost effective than this draft final rule because it would still require testing costs, but provide fewer hazard-reduction benefits.

Comment: Costs of Interlocks Are Higher than Estimated in the Preliminary RIA

A manufacturer claimed that interlocks would be very difficult to ship and manufacture in the context of ready-to-assemble furniture. In addition to the costs of the interlocks, the costs of shipping and packaging would be higher, and the probability of components failing would be higher. This manufacturer has a low-cost interlock system that they state meets the ASTM standard, but not the draft final rule, because it requires human interaction to assemble and operate. An industry trade association expressed skepticism that the cost was really as little as $12, in part due to “hyperinflation” but did not provide an alternative cost estimate. That commenter also alleged that increased demand for interlock components would rapidly drive up the price of interlocks. However, a different industry association commenter provided specific examples of compliance costs that included interlocks for $3 to $5 in some cases, although the number of drawers in those examples was not specified.

Response

The draft standard is a performance standard, not a design standard. Therefore, interlocks are one method that could be used to achieve compliance, but interlocks are not required, and alternative modifications can be used to comply with the draft standard. The price estimate of $12 used in the RIA was provided to CPSC contractors in 2019, by a CSU manufacturer, and reflected use of more than one interlock per unit. As noted above, other commenters had estimates of interlock costs that were far below $12. Current inflation rates of under 10 percent per *year* are nowhere near generally accepted definitions for “hyperinflation,” which exceeds 50 percent inflation per *month*; and there is no evidence that the price for interlocks have an order of magnitude greater inflation rate than the rest of the economy. Furthermore, inflation is expected to increase societal costs of injuries and deaths in a similar way that manufacturing costs increase. Accordingly, inflation is not expected to impact the relationship between costs and benefits for the draft final rule. Manufacturers are not required to use interlocks and are free to use a less expensive design or method, including, but not limited to, other methods to achieve compliance discussed in the NPR briefing package. If there is increased demand for

interlocks, the supply chain should be able to produce those relatively simple mechanical components to meet the demand without significant delays or new investments in capital equipment. It is also likely that, with more demand for interlocks, economies of scale will apply, driving down the wholesale cost of those components over time.

Comment: Loss of Sales of Matching Furniture

An industry trade association for retailers claimed that retailers often sell matching bedroom furniture sets, and people buy one piece at a time. If certain matching CSUs are discontinued, people won't be able to complete the set, which will result in lost sales and reduced value of inventory retailers have in stock.

Response

This appears to be a very specific situation that would not be common, and therefore, would result in insignificant reductions (less than 1% of annual sales) for any given retailer. Specific models of furniture are routinely discontinued, independent of this draft final rule. In any case, the impact would be temporary, as the entire industry transitions to compliance with this draft final rule.

Comment: Costs Are Too High or Too Low, to an Unspecified Extent

We also received comments that the estimated costs were inaccurate, both that estimates were too high and that they were too low. In general, these comments did not provide specific numbers to update the Regulatory Analysis.

Many commenters stated that CPSC had underestimated the shipping and packaging costs, and the "last mile" delivery of products to customers. Retailer industry organizations commented that warehousing and delivery driver expenses would rise. These comments did not provide specific details on how much the cost would rise for a typical or average product.

A self-identified medium-size U.S. manufacturer noted that they would "have additional costs for testing, trucking (extra cost for extra weight), cost for increased workers comp claims as well as costs for weights, interlocking drawer systems and other things to add up to become compliant. All those costs will trickle down to the consumer." They did not specify the extent of those costs.

One commenter noted that manufacturers exaggerate the costs, and they noted further that testing by an independent consumer advocacy organization found dressers that cost under $100, passed their stability tests, which are more stringent than the ASTM standard. Another commenter noted that it is likely that industry will adapt to the standard, and costs of compliance will be greatly reduced in the longer term. A third commenter asked CPSC to consider the cost of the furniture industry's "intentional delay of making these products safer over the past 20 years . . . the time value of industry's delay should also be considered in this equation. Ultimately, this is an argument about profit vs. children's lives."

Response

As discussed earlier in response to specific cost comments, the Final Regulatory Analysis (Tab H) section has been revised to discuss possible higher compliance costs, including costs of shipping and "last mile" delivery. Also, as discussed earlier, if shipping costs are as burdensome as some of the estimates provided by commenters, rational suppliers will select a method of compliance that is more cost-effective, such as drawer interlocks or feet extensions, or will select a combination of weight and other technologies to achieve compliance. We are aware that shipping costs have increased during the pandemic, but the safety benefits of the rule continue to outweigh the average costs of compliance for three out of the five representative example models discussed in detail in the Regulatory Analysis, particularly since there are multiple methods to comply that may not increase the shipping costs.

As for the comment that our cost estimate may be too high, we agree that it is possible for inexpensive CSUs to meet the requirements of the rule, particularly given that inexpensive units often are already made with relatively heavy MDF or similar manufactured wood products. However, the tests by another group were to their own requirements, not this draft final rule. Therefore, we cannot say that their results for inexpensive units are predictive of compliance with the draft final rule. We also agree that it is possible that compliance costs will be lower in the longer term, due to expected efficiencies and economies of scale.

As for the time value of past deaths and injuries vs. the time value of past non-investments in safer technology, we did consider deaths and injuries over the past 20 years in our estimation of future benefits, to forecast potential future cost under the absence of the rule and with the rule. Thereafter, discounted the value of the future costs and benefits to assess the net benefits of the draft final rule.

Comment: Scope of Units Included, Impact on Costs and Benefits

Various commenters suggested that the scope of units subject to the requirements of the draft final rule was unclear. Others suggested that the scope should be widened to include more types of furniture, or the scope should be narrowed to exclude certain types, based on hypothesized hazards and benefits of reducing those hazards that were not supported by data. Other commenters supported the scope, as written. In response to these comments, the draft final rule clarifies the scope and specifically excludes lightweight units that have a filled weight of under 57 pounds. These clarifications and other scope changes are not expected to have a significant impact on either costs or benefits.

Response

In response to comments, staff has modified the scope to exclude certain lightweight units with a combined empty unit + fill weight of less than 57 pounds. Given these units were involved in very few, if any, incidents, we do not anticipate that this clarification of scope to exclude these units will have a major impact on the benefits of the rule for consumers. Manufacturers and retailers of these specific types of units will not have to comply with this rule; so their costs of

compliance will be zero. These lightweight units represent about 10 percent of the U.S. market for CSUs. Overall, this change to the scope is not expected to have a significant impact on the costs or benefits of the rule.

For more details on staff's response to specific comments on scope, please see the earlier comments on that topic.

Comment: Effective Date, Impact on Costs and Benefits

Many commenters representing manufacturers and retailers stated that the effective date needed to be much longer than the 30 days proposed in the NPR. Some did not provide a specific suggestion on how much later. Several commenters specifically requested 360 days. Others characterized 180 days as the minimum possible feasible effective date, or they requested an effective date of "at least" 180 days.

One importer provided detailed information about manufacturing lead times of 90 to 300 days, plus ocean freight times that can exceed 100 days, to justify the request for a longer effective date. Advocacy recommended a later effective date to address supply chain issues, and to ensure retailers have compliant stock by the date of the rule. A retail industry trade association provided specific information of manufacturing lead and testing times of 5 months per model, 6 to 7 weeks for ocean freight, a week-long delay at the U.S. port to unload, and then shipment to the retailer, for a total of about 8 months. Another industry association characterized 180 days as "woefully insufficient," but did not provide an alternative proposal. A retail industry association characterized 30 days as "impossible" for retailers to meet, due to supply chain issues, and they deemed 180 days to be sufficient. A different association noted that retailers are consistently reporting 9- to 12-month timelines from initial order to product delivery to retail customers. One commenter noted that the hang tags, alone, could take weeks to design and approve, months to get the materials for hang tags, weeks to produce the tags overseas, and then several months to ship. Another noted that customer orders can take 9-12 months from order to delivery, so any effective date under a year would make CSUs noncompliant by the time of delivery (based on the effective date requirement in the NPR that applied to both date of manufacture and date of import).

Multiple commenters speculated that customers would buy used, unsafe dressers if compliant units were not widely available when the rule became effective. A manufacturer concurred with this concern, noting that new CSUs will not be available at all for 6 months after the effective date, due to lead times for redesign and shipping. A retailer association concurred that the 30-day effective date would result in empty showrooms, due to the inability of retailers to obtain compliant CSUs. Other commenters also claimed that CSUs would be available in the first 6 months after the effective date, but only "high end" items, with which "popular priced" items would not be able to compete. An industry trade association noted that more than 90 percent of CSUs sold in the United States are imported, so the current supply chain disruptions will force consumers to buy used CSUs.

The Government of Canada noted that because the test methods have known limitations and ambiguities, it is not possible for manufacturers to start designing units now, to comply with the final rule, and that no manufacturers would be able to meet the 30-day effective date.

Other comments from consumer advocacy groups generally expressed support for an effective date as soon as possible, to address the known hazards and benefits of reducing that hazard, with 30 days preferred and 180 days as the latest acceptable date.

Response

Staff recommends that the draft standard take effect 180 days after publication of the final rule. This would provide manufacturers with time to redesign, test, produce, repackage, and make available for retail CSUs that comply with the draft final rule. This would also reduce costs associated with the rule.

Many commenters representing manufacturers and retailers stated that the effective date should be much longer than 30 days due to long lead times for redesigning, testing, manufacturing, and delivering compliant CSUs to consumers. They asserted that changes to a large number of CSU models impacted by the requirements of the rule, along with a heavy industry reliance on ocean freight shippers facing significant constraints due to shortages, contribute to cumulative lead times that range from 3 months to a year or more to bring new models to the U.S. market. This includes time to redesign and test the CSU, and to order and receive component parts needed to manufacture it, as well manufacturing and shipping time for the CSU itself. Further, the record reflects that manufacturers commonly have substantial backlogs of orders, such that a 30-day effective date could make it impossible for retailers to fulfill orders that were placed prior to CPSC's adoption of the final rule.

The Small Business Administration's Office of Advocacy recommended extending the effective date beyond 30 days, to address supply chain issues and availability of CSUs at retail. Staff found these concerns to be credible because of the specific examples provided by commenters and because these comments comport to what staff has determined about the industry's supply chain, which impacts both domestic manufacturing and imports, as stated in the staff briefing package on the NPR.

Staff accordingly assesses that the 30-day effective date proposed in the NPR has the potential to be very disruptive for producers and consumers, including causing shortages for U.S. consumers after cancellation of orders for CSUs that were placed by consumers and retailers prior to the Commission's publication of the final rule. Further, postponing the effective date by several months would reduce the benefits of the rule by only a very small amount as most noncompliant CSUs will take years to cycle out of use. Therefore, staff recommends that the effective date for the final rule be 180 days (the upper limit of the range stated in CPSA section 9(g)(1)) and apply only to the date of manufacture as specified in section 9(g)(1), instead of the date of manufacture or import as specified in the NPR. The rule's anti-stockpiling provisions will also mitigate any such reduction in benefits.

Given the information provided by commenters, which mentioned redesign times of several months, 180 days should be feasible to achieve compliance. One commenter mentioned a manufacturing lead time of up to 300 days, but most comments about the effective date specified a redesign time of a few months. An effective date of 180 days would provide manufacturers several months to redesign units, plus several months to manufacture those units. Based on the additional staff-recommended change to have the effective date apply to the date of manufacture, not the date of import, suppliers could use the full 180 days for redesign and manufacturing. The shipping time from Asia, mentioned by multiple commenters, would be irrelevant for the purposes of compliance.

In addition, several of the alternative methods available to meet the requirements of the NPR could be achieved by adding various weights and interlocks to existing units or partially completed units at the factory. Manufacturers could alter partially completed units to meet the standard with simple tools. One large retailer of inexpensive ready-to-assemble units has already committed to complying with the rule. Based on these facts, we believe that any shortages of compliant units will be of limited duration, and that compliant units will be readily available for sale to consumers on or shortly after the effective date of 180 days after the published date of the rule. The anti-stockpiling provisions will mitigate the effects that the longer effective date might have on reduced hazard-reduction benefits.

A key point of confusion among commenters was the assertion that retailers would be unable to sell existing CSUs as of the effective date. However, the draft final rule would apply to CSUs manufactured after the effective date[18] *i.e.*, the rule would not apply to CSUs that were manufactured before the effective date, except within the limits of the anti-stockpiling provision. Therefore, the effective date provisions allow retailers to continue selling down their stock of units manufactured before the rule becomes effective, subject to the anti-stockpiling limits.

As for taking weeks to design hang tags and months to ship them, that timeline seems rather unlikely, given that the text and graphics requirements are specified in the draft final rule, and that tags easily could be printed in the United States, rather than shipped internationally. However, the recommended 180-day effective date should also address this comment.

Comment: Stockpiling, Impact on Costs and Benefits

The draft final rule recommended by staff allows “stockpiling” but only within defined limits, meaning that suppliers can sell units manufactured between the publication date and effective date of the rule, but cannot manufacture or import a significantly larger number of units than they did during a defined “base period” before the rule was published.

One consumer advocacy group noted that a generous stockpiling requirement would allow the industry to increase production of noncompliant units and recommended keeping the stockpiling rate in the NPR of 5 percent and a specific period of 1 month out of the most recent 13 months.

[18] The NPR proposed to apply the rule to CSUs manufactured or imported on or after the effective date, but the draft final rule would apply the rule to CSUs manufactured after the effective date.

Another consumer advocacy group asked for short and strict stockpiling requirements, because the furniture industry has known this was coming through the rulemaking process and the ANPR, but the commenter did not specify what the requirements should be. Another asked for a shorter and more limited stockpiling requirement, because large businesses would have greater resources to "stockpile" than smaller ones, so any allowed stockpiling would disproportionately favor large businesses.

Another commenter representing retailers noted that given current supply chain issues, it would be more appropriate to return to a stockpiling base period of the "best" year in the past 5 years, as the most recent 13 months reflect COVID-related supply chain issues and are not representative.

Response:

The stockpiling provision in the draft final rule reflects a balance between the competing policy goals of addressing the hazard but also accounting for realistic supply chain limits and considering the compliance costs for businesses. A less specific base period, or a higher proportion above the base production amount would allow more noncompliant units to be manufactured and sold, which could reduce the burden to industry. However, it would also force suppliers of compliant units to compete against a larger stockpiled supply of noncompliant, likely cheaper, units for a longer period of time, and likely reduce the benefits to consumers. A more stringent provision would increase the burden to industry, and might not have a corresponding benefit, since the reduced hazard might not be proportional to the reduced sales of noncompliant units. Considering the balance of competing policy goals, staff does not recommend changing the stockpiling provision. Also, as noted above, the stockpiling requirements are largely irrelevant for retailers, unless they are also the manufacturer.

Comment: Comments on the Injury Cost Model Used to Estimate Benefits

One commenter claimed that the benefits derived from the Injury Cost Model (ICM) are not explained in detail, and there is no detail on the documentation of the model's estimates. The commenter stated that the model should be published for peer review. The commenter also stated that the pain and suffering estimates are over-stated and not peer-reviewed. Overall, the commenter expressed the belief that the benefits are over-stated by a factor of 20, including over-estimates from lost wages and over-estimates of the incidents that will be addressed by the rule (particularly those involving cathode ray tube (CRT) televisions, and those involving adults). The commenter also noted that the Preliminary Regulatory Analysis failed to consider the increased injuries that would occur from moving heavier furniture, and thus, over-estimated the benefits.

Another commenter noted that the benefits are underestimated because of the number of "near-misses" and minor injuries that are not reported, or do not result in hospital treatment.

Response

There is extensive documentation on the ICM on CPSC's website, which can be found here: The Consumer Product Safety Commission's Revised Injury Cost Model 2018 | CPSC.gov. (https://www.cpsc.gov/content/The-Consumer-Product-Safety-Commissions-Revised-Injury-Cost-Model-2018). The ICM was subject to comment and review at multiple times during it's more than 30 years of development and refinement. In addition, we have expanded the explanation of the ICM in the Final Regulatory Analysis in Tab H.

The inclusion of pain and suffering is widely used in regulatory analysis and health policy analysis in the United States and internationally. This is because the simple cost of medical treatment, alone, is not a fair or accurate representation of the cost to society or to an individual, nor does it represent the benefit of avoiding that injury. For example, any parent would rather have their child uninjured than have an injured child but be fully compensated for medical costs. Similarly, the costs to society for a major injury can occur over many years, through reduced productivity for both the victim and for caregivers, reduced quality of life, and premature mortality.

The work loss estimates in the ICM include: (1) the forgone earnings of the victim, including lost wage work and household work; (2) the forgone earnings of parents and visitors, including lost wage work and household work; (3) imputed long-term work losses of the victim that would be associated with permanent impairment; and (4) employer productivity losses, such as the costs incurred when employers spend time rearranging schedules or training replacement workers. The ICM bases these estimates on information from the HHS Medical Expenditure Panel Survey (MEPS), the Detailed Claim Information (a workers' compensation database) maintained by the National Council on Compensation Insurance, the National Health Interview Survey, the U.S. Bureau of Labor Statistics, and other sources.

As for considering the phase-out of CRTs on the incidence of injuries, our injury data and the benefits analysis of that data distinguish between incidents that involved a television from those that did not, as we explained in the Preliminary Regulatory Analysis. Also, deaths involving televisions were excluded from the data used in estimating the benefits. Regarding increased injuries from heavier furniture, the NEISS injuries resulting from moving furniture cited by the commenter are not specifically from moving CSUs; nor did the commenter provide evidence that increasing CSU weight will lead to greater injuries from moving furniture. Also, because manufacturers have multiple ways to comply with the rule, and adding weight is not always the most cost-effective way, there may not be a significant increase in the average weight of CSUs.

As for "near-misses" or minor injuries, the commenter did not provide data sources on which "near-misses" or minor injuries should be considered.

Comment: Children's VSL Should Be Higher, and Benefits Consequently, Are Underestimated

One commenter noted that the benefits of the rule are underestimated, because the number of incidents is underestimated and because children's VSL could be much higher.

Response:

We considered the points raised by the commenter in the sensitivity analysis portion of the regulatory analysis. Specifically, we discussed that a VSL for children could be higher than for adults. As discussed in the document that the commenter referenced, there are alternative methods for deriving the value of a child statistical life. However, there is not a consensus (either in the U.S. or internationally) on what value or method should be used. Therefore, we have developed ranges of possible values in the regulatory analysis, as part of the discussion of the uncertainly in the magnitude of benefits. The current range of values in the peer-reviewed literature for a child's VSL ranges from less than one to more than seven times the value of an adult VSL, as discussed in more detail in the Final Regulatory Analysis. We have expanded the discussion of this range in the sensitivity analysis part of the Regulatory Analysis, but we did not change the core estimate of children's VSL in the benefits analysis.

We also discussed in the sensitivity analysis that benefits may accrue more quickly than in the core estimate if consumers place a high value on the safety provided by compliant CSUs and accelerate their replacement of existing CSUs above the current rate.

Comment: Some of The Alternatives Discussed Would Have No Benefit

Certain commenters felt that some of the alternatives discussed in the Regulatory Analysis would have no benefit, particularly the option to require only hang tags. Others were critical of alternatives that involve relying on the ASTM standard because they expressed frustration at the ASTM process and skepticism about the effectiveness of the voluntary standard.

Response

We agree that the hang-tag-only alternative has much lower benefits than the draft final rule, as explained in the Final Regulatory Analysis. However, we do believe there are benefits associated with providing consumers with more information about product hazards so that they can make informed decisions based on technical information about the relative stability of the product as compared to other products.

We agree that the published ASTM standard does not adequately reduce the risk of injury associated with CSU tip overs, even with a higher test weight, because it does not address the effects of multiple open and filled drawers, carpet, or horizontal and dynamic forces of a child climbing on a CSU, and it would likely only address hazards to younger and smaller children. In addition, staff identified multiple CSUs involved in tip-over incidents that meet the stability requirements of the ASTM F2057 – 19 standard. While the cost of mandating the ASTM

F2057 – 19 standard with a higher test weight would be less than the draft final rule, because many CSUs on the market already comply with the ASTM standard, the benefits would also be much less, because the standard doesn't adequately address the hazard. We cannot estimate the specific quantitative benefits of a potential revised ASTM standard that is not yet completed.

Comment: Some of the Alternatives Discussed Would Have Greater Benefits, or Be More Cost Effective.

Multiple commenters felt that the alternative of working with ASTM to update the voluntary standard would be a more cost-effective way to address the hazard, while minimizing the burden on small businesses, or businesses of any size.

Multiple commenters supported the alternative of a higher test weight, either with the current CPSC proposal, or with the ASTM standard, to address the hazard to older or larger children. One commenter asserted that the higher test weight would address social equity issues, because obese children are disproportionately persons of color.

Response

As discussed in detail in the Regulatory Analysis, while working with ASTM would reduce burden on the industry, it would not address the hazard in a timely way. Thus, all the benefits to consumers from the rule would be delayed indefinitely. Therefore, this is not a cost-effective alternative, because while the costs of compliance would be less, the benefits would be far less. As noted earlier, many other commenters raised the issue that the ASTM standards process has been neither timely, nor effective at addressing the hazard. As to higher test weight (and thus, test forces) addressing equity issues because obese children are disproportionately persons of color, staff notes that the draft final rule addresses 95th percentile weight of 3-year old, a much higher percentage than the ASTM standard does.

Comment: The Rule Will Reduce Consumer Choice Permanently, Particularly Impacting Low-Income Consumers

One large manufacturer commented that the rulemaking process itself has already caused at least one large furniture retailer to stop selling CSUs. Various commenters noted that the draft final rule would reduce consumer choice permanently, causing people to buy secondhand unsafe CSUs, or not buy CSUs at all. Similarly, commenters noted that the increase in prices caused by this rule will be permanent, and higher prices will disproportionately burden low-income consumers. Another manufacturer noted that the interlock requirement would force them to discontinue some innovative, high-end designs with unusual drawer configurations.

Several commenters noted that families have limited disposable income to spend on children's furniture, and often resort to lower-priced or secondhand items for children's rooms, and that the rule will exacerbate this behavior.

Others noted that since a large percentage of CSUs are purchased by people without children, the burden of the rule would permanently reduce choices for the millions of people who don't have children. Other commenters noted that children are in danger from CSUs owned by non-parent relatives and caregivers, as well as CSUs in places of public accommodation. We also received multiple comments from bereaved parents about the unknown and unseen hazards of CSUs, asking us to ensure that products with unknown hazards are removed from the market.

A commenter stated that the Regulatory Analysis should quantify the loss of consumers' reduced choices of CSUs.

An industry association and others claimed that the rule would make CSUs too expensive for many consumers. One commenter noted that because of typical retail markups, the retail price to consumers will go up at least 3 times what the cost to manufacturers will be – so if the rule costs manufacturers $250 million, it will cost consumers $750 million, which will impact lower-income consumers disproportionately. One industry association provided specific examples that did show an approximately 3 times markup from manufacturing cost to retail price – the cost to manufacturers of under $100 would result in a more than $300 increase in the retail price.

Response

These comments are largely consistent with what CPSC staff already discussed in the NPR briefing package and Preliminary Regulatory Analysis regarding impacts on consumers, without providing additional data on the quantifiable or non-quantifiable impacts. Specifically, CPSC staff noted in the Preliminary Regulatory Analysis that accompanied the NPR, given typical retail markups, retail prices to consumers might rise 2 to 4 times what the cost of compliance is for manufacturers. CPSC staff also noted that the rule might have various non-quantifiable cost impacts on consumers (also referred to as reductions in consumer utility). We noted particularly that some smaller, lightweight CSU models might be withdrawn from the market altogether, if the cost of modifying those models to be compliant were too great in relation to their expected sales. Consumers who wanted those specific models would have a loss of consumer utility, mitigated by other compliant models that are imperfect substitutes. We also noted that if the withdrawn models were disproportionately inexpensive, consumers might keep using their older (less safe) CSUs, purchase a used one, or use other products, like shelving or bins, for storage. The discussion of possible losses of consumer utility has been expanded in the Final Regulatory Analysis. The rule has been revised so that certain lightweight units will be out of scope of this rule, thus preserving an inexpensive option for consumers.

Regarding the cost of diminished consumer choice in the marketplace, the Final Regulatory Analysis does discuss specifically the deadweight loss associated with consumers and producers exiting the CSU market because of potential increases in the CSU cost of production, and in the retail price. It is not feasible to estimate the extent of these losses with appropriate precision, as we do not know the extent to which consumers will demand the safer CSUs that are compliant with this rule. Consumers may consider the safety enhancements of compliant CSUs to be a different, new product that is worth the price increase. Under this case,

deadweight loss to both consumers and producers would be minimal, because they would receive an increase in utility (from increased safety) along with higher price, and manufacturers would see increased demand for their new compliant products.

It is not clear that the furniture retailer mentioned that left the market did so specifically or solely due to the rule or the ASTM standard, particularly since the CPSC rule had not been published at the time, and the ASTM standard was in the process of revisions. However, since the proposed rule is not yet effective, exiting the market because of it seems rushed or impractical. Some amount of market entry and exit each year is normal in an industry with thousands of retailers and manufacturers.

Regarding the comment on interlocks and innovative designs, the draft standard is a performance standard, not a design standard, and suppliers will still be allowed any design that meets the performance standard. Interlocks are not required to meet the performance standard. As CPSC staff's analysis and numerous commenters stated, there are multiple options for modifying CSUs to comply with the draft final rule.

Given that a major retailer of inexpensive Ready to Assemble Units has been preparing to produce compliant CSUs, CPSC staff believe that any shortages of compliant units will be of limited duration, and that compliant units at an affordable price will be readily available for sale to consumers on or shortly after the effective date. If manufacturers were to raise prices by three times their actual cost of compliance, which is within the range of markups discussed in the Regulatory Analysis, that is a decision that is in no way required by the draft final rule. Although that could in fact have a disproportionate impact on lower income consumers.

Comment: The Cost of Testing Is Higher Than Estimated in the Regulatory Analysis, And Is Higher Than Is Needed to Address the Hazard

We received many comments about the costs of performing the tests in the draft final rule. An industry association noted that if both test methods must be used, that significantly raises the testing costs above one method.

Advocacy commented that CPSC should reconsider having two test methods, which increases complexity and costs for small businesses, as well as potentially confusing consumers.

One manufacturer noted that the tests are overly complex, so it would be difficult to use them on the production line to ensure that units are meeting the standard. It would be more effective and less burdensome if the testing could be done at the factory, because materials such as wood composites can vary from batch to batch in weight and density due to raw inputs and ambient humidity. Hardware components may come from various suppliers. So, it would be more efficient and effective if the test methods could be done during production, so that manufacturers can remediate any compliance issues prior to shipment. The way this is written, manufacturers will almost certainly have to use third party testing instead. Another commenter, a consumer advocacy group, expressed concern that testing should be done on units ready for retail delivery, not prototypes or design samples.

One manufacturer reported that testing labs had refused to attempt the tests as written or couldn't do the whole test procedure. Manufacturers won't be able to get the tests done in a timely manner as they are currently written. Another stated that the tests would cost $300 to $500 per sample for third party testing, and over $100,000 per year for their self-identified medium sized company.

Response

As discussed in the Preliminary Regulatory Analysis, we estimated that the incremental costs of testing to the draft final rule rather than to the ASTM standard may be minor, since many manufacturers are already testing to the ASTM standard, and the cost of testing can be spread over thousands of units per model. Staff have expanded the sensitivity analysis in the Final Regulatory Analysis to discuss that testing costs may be higher for units that are not currently tested for compliance with the ASTM standard, and that the tests required by the draft final rule are different in nature and complexity from those required by the ASTM standard. This rule does not require third party testing, except for children's CSUs that were already subject to third party testing.

We asked for specific comments on the costs of testing and received mostly general statements about the complexity and reproducibility of the tests, with one example of specific prices of testing. We have clarified that only one test method is required per CSU. This standard does not require third party testing, except for children's furniture that is already subject to third party testing requirements. Therefore, we have not changed this assumption in the Final Regulatory Analysis that testing costs beyond the testing required for conformance to the ASTM standard are minor for manufacturers; the tests are estimated to add less than ten cents to the cost of CSU unit. The test method does not require two tests on one CSU; we have added clarifying language to the draft final rule to make that clearer.

An industry trade association commenter noted that more than 90 percent of CSUs sold in the United States are imported. Therefore, the majority of the testing burden will not be borne directly by U.S. manufacturers or wholesalers, but rather by foreign manufacturers. The one manufacturer who provided testing cost estimates stated that the costs would be $300 to $500 per sample, which would not be a significant cost (more than 1% of annual revenue) for most manufacturers. And again, these would not reflect the testing costs as a result of the draft final rule unless the manufacturer had not previously been testing for compliance with the ASTM standard.

We added additional discussion of testing costs to the sensitivity analysis. Testing costs could be higher or lower than estimated in the main analysis, depending on where the tests take place. If the industry continues to primarily rely on imports, the costs could be lower if all the testing takes place in lower wage countries. Testing costs could be higher on average if product shares of general-use CSUs compared to CSUs for children could shift in the short term, as consumers demand safer CSUs specifically marketed for children. Children's product testing requires more expensive third-party testing.

Comment: The Rule Will Have Environmental Costs

A manufacturer noted that "The rule also does not give weight to the environmental costs associated with this change, including increased fuel consumption for transportation due to heavier packages with less fitting in a shipping container or truck, the increased amount of raw materials required to achieve the weight necessary, nor is the increased packaging material entering the waste stream accounted for, heavier products tend to required more EPS padding and heavier corrugated cartons." An industry trade association provided further details that the discarded units going to landfill would create more than 91,316 kg of carbon dioxide emissions, based on the average weight of existing noncompliant units. Other commenters noted the environmental cost of scrapping obsolete units.

Response

The increase in fuel costs is speculative and assumes that the only way that manufacturers will comply with this rule is by adding weight to the units. The rule is a performance standard, not a design standard, and as discussed extensively in the Briefing Package, there are multiple ways to comply with the performance requirements that add only minimal weight to the units. However, even a slight increase in the average CSU weight may require additional fuel for transport; which is why CPSC staff discusses it in broad terms in the sensitivity analysis.

Obsolete units will not need to be scrapped unless there is no consumer demand for them after compliant units become available. The effective date provision in the draft final rule will permit the sale of units manufactured before the effective date of the rule, provided those units were not manufactured or imported in excess of the specified stockpiling limits.

Comment: Impact of the Rule on Foreign Manufacturers

A group of manufacturers from a foreign country (Canada) and the Canadian government noted that 90 percent of their furniture exports go to the U.S. They expressed concern that the costs of compliance were underestimated. They requested a longer effective date to comply.

Response

All products sold in the U.S. must meet U.S. safety standards, by the effective date specified in the U.S. regulation. CPSC staff received similar comments from U.S. suppliers and have estimated ranges of potential costs of compliance in the Final Regulatory Analysis, while also recommending an effective date of 180 days.

Comment: Consistency with STURDY Act, Impact on Costs

We received multiple comments from a coalition of manufacturer/retailers and a number of consumer advocacy groups asking that the NPR be consistent with the STURDY Act on scope and testing methods, which would reduce compliance costs for suppliers.

Response:

If enacted by Congress, the STURDY Act (the Stop Tip-overs of Unstable, Risky Dressers on Youth Act) would require the Commission to promulgate a consumer product safety rule for free-standing clothing storage units to protect children from tip-over related death or injury. However, the STURDY Act legislation has not been passed as public law and the version of the STURDY Act passed by the House is different from that under consideration in the Senate. Therefore, the if the STURDY Act passes in the Senate, it is subject to further amendments during negotiations between the House and Senate. CPSC does not know if the STURDY Act will be passed, when, or what it will contain. Therefore, CPSC cannot align the current rulemaking with a potential and unresolved draft legislation or assess the relative costs under that option.

Child Climbing Study (Tab R of NPR briefing package)

Comment: Participant Selection

A trade association commented that "if the maximum tip-over moment is desired, then only older children should have been recruited."

Response

The study was designed to measure the forces generated by children with a range of body size and age. The ages of the children included in the study (18 months to 71 months) were based on incident data that show that younger children are the most affected age group for CSU tip overs. Ninety-four percent of children in fatal CPSRMS tip-over incidents involving CSUs without televisions were 3 years old or younger. Two-year-old children suffered the most ED-treated CSU injuries, followed by 3-year-olds, then 1-year-olds, and then 4-year-olds. With respect to force generation capability, the factors of interest are correlated with age: body size, body weight, and motor development, although age itself does not directly influence force production capability. University of Michigan Transportation Research Institute (UMTRI) researchers determined that the amount of tip over moment a child is capable of generating is most closely related to body weight. The analysis makes clear the value of including children with a wide range of body size, lending strength to the conclusions.

Comment: Children's Interactions

The trade association expressed concern about children's interactions with the test fixture in the study, including concern that researchers provided instructions on interactions to the child participants, that the interactions were limited and not chosen freely by the children, and that the instructions may not align with how the interaction is classified (*e.g.*, the difference between "bounce" and "jump").

Response

As explained in Tab C of the NPR briefing package, CPSC staff worked with UMTRI researchers to develop the set of scripted interactions used in the study. The interactions were based on incident data and naturalistic videos of children interacting with CSUs and other furniture items, with a focus on realistic interactions in which the child's position and/or dynamic interactions were the most likely to cause CSU tip over. The ascent interaction in the study, which staff used to calculate the threshold moment in the performance requirements, is analogous to a child's initial step to climb up on to the CSU; staff concluded that this interaction models the climbing behavior commonly seen in incidents. Staff assessed that the other, more extreme interactions (*i.e.*, bounce, lean, and yank) were also plausible interactions, based on child behavior; however, these interactions were not directly observed in the incident data, and were not used to calculate threshold moments. Staff notes that, depending on the child's age, weight, and strength, some of these interactions could be addressable with the recommended performance requirements.

As explained in the UMTRI report, the instructions that researchers provided to the children were kept very simple: researchers generally used three-word sentences *(e.g.*, "Please climb up" or "Hands go here") augmented by hand signals, such as pointing to the upper bar. These instructions were designed to elicit interactions of interest, based on the incident data and naturalistic videos, while allowing children the freedom to determine the specific method to complete the interaction (*e.g.*, posture, specific hand and foot position on the bars, and speed). Researchers reviewed video from each trial to isolate the frames containing target behaviors and characterize them, and to ensure that all data included resulted from a valid trial with the appropriate behavior. Inclusion and exclusion of data was based on researcher's expert judgement and biased toward inclusion of a wider range of behavior rather than a narrow interpretation of the instructions.

Overall, staff conclude that the interactions in the study were representative of potential child interactions with CSUs.

Comment: Test Apparatus

The trade association expressed concerns that behavior and posture were limited by the test apparatus, that the equipment "was designed to elicit maximum forces…, *i.e.*, affordance size and friction were optimized and not limited to the proportions or properties of CSUs," and that the test fixture may not mimic the dimensions of a CSU. The commenter also questioned whether researchers verified force readings or calibrated load cells.

Response

As explained in Tab C of the NPR briefing package, CPSC staff worked with UMTRI researchers to develop the test fixture. CPSC staff provided information to UMTRI researchers on drawer extension and heights, as well as other dimensions, from the sample of dressers used in the Laboratory Sciences Mechanical Engineering Division (LSM) staff evaluation (Tab

N). Researchers selected and constructed a parallel bar test fixture, representing a lower foothold and an upper handhold. These bars represent a best-case CSU climbing surface, similar to the top of a drawer. Because of safety concerns, researchers did not create a moving drawer, stagger the upper bar farther from the participant than the lower bar, use an actual CSU, or use an apparatus that could tip or accelerate toward the child. Scaling the test conditions to child size ensured that each child would experience conditions, and produce postures, representing a wide range of CSUs. Despite these potential limitations, CPSC staff concluded that the test fixture was sufficiently representative of a CSU, and that children's interactions with the test fixture could be reasonably applied to CSUs.

Regarding calibration, the load cells used in the fixtures were factory calibrated by their respective manufacturers. Researchers used pilot calibrations, applying known loads, to verify the accuracy of the load cells after installation in the fixtures.

Comment: Data Analysis and Reporting

The trade association commented on several aspects of the data analysis and reporting, including that posture observations and measurements were not reported, specific values (*e.g.*, force in the horizontal and vertical direction) were not reported or "vague," that certain statistical analyses (*e.g.*, T-test or ANOVA) were not performed, and that the rotational equilibrium was not discussed. The commenter also expressed concerns about averaging data from participants, including that there was "no analysis to indicate if normalization by weight of the child interacting with the clothing storage unit is necessary or appropriate;" and methods used for center of mass (CM) calculations (*e.g.*, inverse kinematic analysis vs. forward analysis/manual image digitization). The commenter opined that the forces measured were not reported in a meaningful way that could be directly applied to various CSU designs based on results.

Response

Because posture affects the location of the CM, the effects of posture are included in the results. UMTRI researchers estimated the child's CM location at the time of peak moment generation from video frames. The CM location was examined as an explanatory variable, and it was not used in the calculations of tip-over moment. Researchers found that the CM is always further from the fulcrum from than the front of the drawer in all handle configurations and behaviors, due to the dimensions and posture of the child. The CM locations help to explain why children are able to exert a static moment that is greater than the product of their body weight and the drawer extension. Specifically, the CM is always further from the fulcrum than the front of the drawer, due to the dimensions and posture of the child.

Regarding reporting specific values, the effects of horizontal forces on tip-over moment are explicitly included in the calculation of tip-over moment, and vertical force data are reported and analyzed throughout.

Regarding statistical analysis, no further statistical analysis (*e.g.*, t-test or ANOVA) is needed beyond what is provided in the report, because the application of data in the NPR and draft final rule is not based on differences between test conditions. The threshold moment criteria only use data from the mean maximum moment from the ascent interaction.

Regarding rotational equilibrium, the figures and equations show that a two-dimensional quasistatic analysis was conducted, considering both horizontal and vertical forces. Quasistatic means that the analysis used forces measured at a point in time during a dynamic event. To protect the safety of the children who participated in the study, the study did not use an actual CSU or apparatus that could tip or accelerate toward the child; rotational equilibrium was maintained during the study by the rigid nature of the test fixture. Whether the forces that children exert during various behaviors result in rotational acceleration when climbing a CSU is dependent on the design of the furniture.

Regarding averaging data from participants, Figure 44 of the report shows that the data from older children can be aggregated with data from younger children after accounting for body weight. The values cluster tightly around the linear fit, indicating that body weight scaling is effective. Body weight normalization is routine in biomechanics analysis (for example, in ground force reaction data from gait) whenever the action of gravity on body mass has a strong effect on the results.

Regarding CM calculations, researchers used “manual image digitization” to estimate CM locations. Inverse kinematics and “forward analysis” are not relevant for this analysis. As noted, the CM location was an explanatory variable and was not included in the moment calculations.

Regarding application of the data to CSUs, the study gathered and analyzed data showing the forces that children exert during ascent and other interactions. The primary statistic extracted from each trial was a tip-over moment calculated with respect to a virtual fulcrum located based on CSU data. This allows the force values at the hands and feet to be interpreted with respect to their effects on CSU stability.

Comment: Virtual Fulcrum and Position of Upper and Lower Bars

The trade association expressed concerns about the virtual fulcrum, and the position of the upper and lower bar as they relate to CSU dimensions, including the offset of the upper bar that was used in some test conditions.

Response

As discussed in the report, for safety reasons, most trials were conducted with the lower bar as close to the padded floor as possible. However, the effect of the child-exerted forces on the likelihood of tip over is affected by the location of the points of application of these forces relative to the effective fulcrum about which the furniture would tip (generally the front edge of the base of support). Consequently, the effects of the child-exerted forces on the likelihood of

tip over were estimated by calculating moments (torques) around a virtual fulcrum. As stated above, CPSC staff provided information to UMTRI researchers on drawer extension and heights, as well as other dimensions, from the sample of dressers used in the LSM staff evaluation (Tab N). These values were used in the virtual fulcrum analysis. In the report, UMTRI researchers provide detailed analysis of the effects of virtual fulcrum placement and show that varying the fulcrum distance in the horizontal direction has a strong effect, since the downward forces from the interactions are generally higher than the horizontal forces. The vertical fulcrum distance has a smaller effect. The threshold moment criteria in the NPR and draft final rule include the drawer or pullout shelf extension to account for these differences.

The report also includes analysis of the effect of vertical handle placement and states that a comparison of the moments for all ascent conditions with those for the high step (lower bar) height did not show meaningful differences. Combined with the small effect of varying virtual fulcrum in the vertical direction, this shows that the results of the study are applicable to CSUs of varying height and drawer configurations. Regarding the upper bar offset, the threshold moment criteria were based only on the trials in which the upper and lower bars were aligned, so they do not include any potential effect from an offset.

Comment: Outliers and Linear Regression

The trade association commenter asserted that normalizing the data appears to generate more "outliers" whose origins are not reported; that there isn't explanation or proper accounting for these outliers; and these data points could affect the reported averages. The commenter also expressed concern that the reported R^2 (linear regression) values show a "lack of fit."

Response

The "outliers" shown in the box plots in the report do not represent errors. Rather, they show that children can produce varying forces depending on their specific method of interaction (*e.g.*, a quicker ascent generally produces higher forces). Figure 41 and the associated Table 13, as an example, shows that the small number of higher values do not have substantial effects on the results: for the Ascend behavior, the mean maximum moment of 59.6 pounds-feet is only slightly higher than the median of 56.6 pounds-feet.

The linear fits in Figures 43 and 44 can be used to assess the extent to which the results are affected by body weight and other factors. The R^2 value of 26% for the Ascend behavior indicates that considerable variability in behavior remains after accounting for body weight. Table 18 and Figure 46 show that body weight (and other factors correlated with body weight) account for nearly all of the variance in moment in the data set, strongly supporting the use of body weight normalization. This finding increases the generalization of the data, because tip-over moments can be estimated for a child of any body weight in the range studied.