UNITED STATES GOVERNMENT

MEMORANDUM

U.S. CONSUMER PRODUCT SAFETY COMMISSION
WASHINGTON, D.C. 20207

RECEIVED-OFFICE OF THE SECRETARY
'87 DEC -9 P2:49
CONSUMER PRODUCT SAFETY COMMISSION

December 7, 1987

TO : The Commission

Through: Sadye E. Dunn, Secretary
Leonard DeFiore, Executive Director for

FROM : James V. Lacy, General Counsel
Stephen Lemberg, Asst. General Counsel
Harleigh Ewell, Attorney, GC

SUBJECT: Petition HP 87-2 to Amend the Small Parts Regulation

BALLOT VOTE DUE: JAN 06 1988

Attached is a staff briefing package on the subject petition.

Please indicate your vote on the following options.

I. GRANT THE PETITION (staff will prepare a draft ANPR for the Commission's consideration).

_____ _____
(Signature) (Date)

II. DENY THE PETITION (staff will prepare a draft letter of denial for the Commission's consideration).

_____ _____
(Signature) (Date)

III. OTHER (please specify).

_____ _____
(Signature) (Date)

Comments/Instructions:

CPSA 6 (b)(1) Cleared

___ No Mfrs/PrvtLblrs or Products Identified
X Excepted by Pet Proceeding
___ Firms Notified,
Comments Processed.

Except for OGC Memo of 12-7-87 and all of TAB E

NOTE: This document has not been reviewed or accepted by the Commission.
Initial ___ Date 12-7-87

UNITED STATES GOVERNMENT

Memorandum

U.S. CONSUMER PRODUCT
SAFETY COMMISSION
WASHINGTON, D.C. 20207

DEC 7 1987

TO : The Commission
THROUGH : Sadye Dunn, Office of the Secretary
THROUGH : James V. Lacy, Office of General Counsel
THROUGH : Leonard DeFiore, Executive Director
THROUGH : Douglas L. Noble, Director, OPMB
THROUGH : Carl W. Blechschmidt, Program Manager, OPMB

FROM : Elaine A. Tyrrell, Project Manager
Children and Recreational Products, OPMB, and
Carole Shelton, Project Management Specialist, Office of
Program Management and Budget (OPMB)

SUBJECT : Transmittal of Briefing Package on Petition HP 87-2 to amend the Small Parts Regulation, 16 C.F.R. Section 1501.4

Attached for Commission review and consideration is a briefing package on whether to grant or deny the subject petition submitted jointly by the Consumer Federation of America (CFA) and the New York State Attorney General's Office.

Pursuant to Section 5 of the Commission General Policies of March 18, 1987, the Executive Director indicates that he is reasonably unaware of any relevant and significant minority or dissenting views on this issue except for those contained in this package, if any.

The Directorates for Compliance and Administrative Litigation, Economic Analysis, Engineering Sciences, Epidemiology, Field Operations, and Health Sciences; and the Offices of Information and Public Affairs, Planning and Evaluation, and Program Management and Budget have reviewed this package and approve its contents.

Please note that the attachment to the November 10, 1987 memorandum from the Division of Special Studies (ECSS) at Tab E is marked RESTRICTED.

Attachment

UNITED STATES GOVERNMENT

Memorandum

U.S. CONSUMER PRODUCT
SAFETY COMMISSION
WASHINGTON, D.C. 20207

DEC 7 1987

TO : The Commission
THROUGH: Sadye E. Dunn, Secretary
THROUGH: James Lacy, General Counsel
THROUGH: Leonard DeFiore, Executive Director
THROUGH: Douglas L. Noble, Director, OPMB
THROUGH: Carl W. Blechschmidt, Program Manager, OPMB

FROM : Elaine A. Tyrrell, Project Manager, Children's & Recreational Products, OPMB and
Carole P. Shelton, Project Management Specialist, Office of Program Management and Budget (OPMB)

SUBJECT: Petition HP 87-2 to Amend the Small Parts Regulation, 16 C.F.R. Section 1501.4

ISSUE

Whether to grant or deny a petition (Tab A) submitted jointly by the Consumer Federation of America (CFA) and the New York State Attorney General's Office. The petition requests an amendment of the Consumer Product Safety Commission's small parts regulation.

PETITION REQUEST

In their petition, CFA and the New York Attorney General's Office request that the CPSC amend 16 C.F.R. section 1501.4 to require that the small parts test fixture be changed. The petitioners are requesting the design of a new small parts standard in which a diameter of at least 1.68 inches would be required for all toys intended for children under three years of age. The petition further states that the standard's length requirement is irrelevant in preventing choking.

The facts claimed to support the need for an amendment of the small parts regulation are derived from a CPSC Human Factors Analysis of Choking Incidents in Children (1983), a 1986 CPSC Data Update on Toy-Related Injuries, a 1986 CPSC listing of choking incidents occurring between 1978 and June 1986 and compiled under contract from in-depth investigations, and a written opinion by Bernard Dreyer, M.D. (Tab A).

The requested amendment, if promulgated, would ban certain toys and children's articles that are not banned under the existing requirements. The petitioners believe that the amendment would eliminate toys from the marketplace which pass the existing small parts requirements but which pose potential choking hazards to children under age 3.

OGC Guidance

The Office of General Counsel (OGC) advises that the staff briefing package should focus on factors relevant to whether it is necessary to amend the test fixture requirement and should include an analysis of whether the existing rule (and any existing voluntary standard) is adequate to reduce choking, aspiration, and ingestion risks associated with toys and other articles intended for use by children under the age of 3. If an amendment does appear to be necessary, the appropriateness of the amendment suggested by the petitioners should be analyzed and, if possible, the benefits and costs of the amendment (and any reasonable alternatives) should be estimated.

The procedures in Section 3(e) - (j) of the FHSA would control the issuance of an amendment. If the Commission granted the petition and decided to commence a rulemaking proceeding, it would issue an advance notice of proposed rulemaking, followed by a comment period, issuance of a proposed rule, another comment period, and issuance of a final rule.

BACKGROUND

In 1983, Commission staff prepared a Human Factors report on choking incidents to support a project in the Children's and Recreational Products Program relating to the choking hazard associated with squeeze toys. Information in the report indicated that the CPSC regulations for small parts, rattles, and pacifiers have been effective in eliminating some products presenting choking hazards from the marketplace by setting minimum size requirements. However, choking incidents had continued to occur on products which complied with the small parts and rattle regulations in addition to incidents involving squeeze toys. The report also contained a proposal for a generic test fixture to be developed to replace the small parts, rattle, and pacifier test fixtures. This test fixture consisted of a 1.68 inch diameter cavity with a depth of 1.18 inches. The report identified 195 choking incidents including 37 deaths, between July 1973 and May 1983, on children's products larger than the small parts cylinder.

As a result of this project on squeeze toys, CPSC staff worked with the Toy Manufacturers of America (TMA) to develop requirements for squeeze toys, rattles and teethers for inclusion in the voluntary standard for toy safety. Specifically, the ASTM F963-86 Standard Consumer Safety Specification on Toy Safety states that certain shaped rattles, in addition to meeting the mandatory rattle standard, are also subject to a supplementary test fixture with a 1.68 inch diameter cavity. It further states that all squeeze toys and teethers, in addition to meeting the mandatory small parts requirements, are also subject to the rattle tester used in the mandatory rattle standard, and that certain shaped squeeze toys and teethers are subject to the supplementary 1.68 inch diameter test fixture cavity. No requirements were adopted for toddler toys since the data were less compelling, and toddler toys were too diverse for the supplementary test fixture to adequately distinguish between hazardous and non-hazardous toys.

In 1986, a contractor for Human Factors' described all choking incidents investigated between 1978 and June 1986. There were 26 incidents of choking on toys intended for children ages 2 and younger involving objects which did not fit into the small parts test cylinder.

CURRENT STAFF ACTIVITIES

Project Approved in FY 88 Operating Plan

A staff project to address the choking hazards cited in the petition was initiated on October 1, 1987, as part of CPSC's Fiscal Year (FY) 1988 Operating Plan.

At Tab B is a memorandum from the Directorate for Epidemiology's (EP) Division of Hazard Analysis (EPHA) which describes data collection plans for the FY '88 Choking Hazards Project. In FY '88, a special study will be conducted to collect data on children's choking incidents. In FY '89, a hazard analysis and Human Factors analysis (including criteria for development of a prototype test fixture) will be completed. In FY 90, staff recommendations will be developed and presented to the Commission. Staff will implement CPSC decisions in subsequent years.

Injury Information

The EPHA staff has provided information relating to the Petition in two separate memoranda (Tabs B and C).

Tab C is a memorandum from EPHA which clarifies the petitioner's reference to the CPSC October 1986 report which stated that in 1985 small toys or parts thereof were responsible for 12,000 injuries. EPHA clarifies that while the statement basically is correct, it should be noted that these were not necessarily all choking-related injuries, nor were they limited to children under 3, nor to toys subject to the rule.

Human Factors Information

Tab D is a memorandum from the EP Division of Human Factors (EPHF) which characterizes whether data cited by the petitioner indicate that the size of the small parts test cylinder may be too small. The petitioner cited two data sources of choking incidents on objects larger than the small parts cylinder.

Clarifications should be made about using the numbers cited in the 1983 analysis to indicate that the small parts test fixture may be too small. While pre- as well as post-standard rattles and pacifiers were included in this analysis, these pre-standard objects are no longer on the market. In addition, if the voluntary standard has a high degree of conformance, certain hazardous rattles, squeeze toys, and teethers are no longer on the market. After taking these points into account, 71

choking incidents cited in the 1983 report, which includes 14 deaths and one occurrence of brain damage, have not been addressed by any existing mandatory or voluntary standard.

The second data source cited by the petitioner is raw data on in-depth investigations obtained from CPSC in 1986. The petitioner analyzed this data and determined that 13 choking incidents between 1978 and 1986, which included 8 deaths, occurred on objects larger than the small parts test fixture. It would be nearly impossible to verify these numbers since the petitioner received only a subset of the data compiled under a contract in 1986. (The data were sent to the petitioner while the contract was still in process.) CPSC's contractor subsequently determined that 26 incidents occurred involving toys, or parts of toys, which did not fit into the small parts tester.

It should be noted that since these data include all choking incidents investigated between 1978 and June 1986, undoubtedly, some overlap exists between this source of data and the 1983 report.

Economic Data

The Directorate for Economic Analysis has provided some general economic information about the toy and game industry and some information on possible costs of a revised small parts regulation (Tab E). Also included is a market sketch of the toy and game industry prepared in 1985. (Please note that this report is marked RESTRICTED).

According to government and trade sources, retail U.S. sales of toys and games were $12-15 billion in 1986. EC's best preliminary estimate of the quantity of toys sold in 1986 was perhaps 1.5 billion units.

The customs value of U.S. imports of toys and games in 1986 was $1.9 billion. The retail value of imports is substantially higher, with markups at the importer, wholesale, and retail levels. Assuming a markup level of 400%, imports would represent $7.6 billion in retail sales --- or about 60% of total retail sales. The proportion of imports to total sales varies by product, from about 40% of wooden toys to about 80% of dolls and stuffed animals.

The extent to which existing products would have to be modified to meet any revised small parts regulation is uncertain; some products might be discontinued while others might be redesigned. EC notes that a revision that eliminates the choking risk from products covered by the petition and that affects a small proportion (up to about 10%) of all toys and games at reasonably low cost (about 2-4 cents per unit average price increase) may be economically efficient.

OPTIONS

1. Grant the Petition

The Commission may grant the petition to initiate action to develop a new small parts standard in which a diameter of a least 1.68" is required for all toys and certain other products intended for children under three years of age, if it finds:

- o There may be an unreasonable risk of injury associated with toys which comply with the small parts regulation but are involved in choking incidents.
- o The existing mandatory requirements or voluntary standard for toy safety may not eliminate or adequately reduce the risks of injury associated with small parts or that there may not be sufficient conformance with the voluntary or standard.

If the Commission votes to grant the petition, the staff will prepare an "advance notice of proposed rulemaking" (ANPR) for Commission approval and has prepared estimates of the resources needed to pursue the regulatory development process as indicated below.

Assuming that the FY '88 Project on Choking Hazards will focus on the necessary incident data collection (12 Professional Staff Months (PSM's) for EP to develop the special study, monitor data collection activities, and process the data), the FY '89 Project could focus on the development of a hazard analysis and human factors analysis report, and the development of a prototype test fixture. Resources for the FY '89 level of effort would remain about the same for EP and include an additional 2 PSM's each for the Directorate for Economic Analysis and Compliance and Administration Litigation. In order to provide a medical evaluation of the collected data the Directorate for Health Sciences will require approximately one PSM each for FY '88, '89 and '90. Staff options/recommendations based on this study could be developed for Commission consideration in early FY '90. Staff estimates 2 years for development of information to support rulemaking.

	Data Collection	Staff Studies/ Analyses	Rulemaking Activities
	FY88	FY89	FY90
EPI	12*	13	8
ECON		1	4
ENG			4
CA		1	4
HS	1	1	1
	13	16	21

* 3 PSM's need to be added for support activities in EP.

80

2. Deny the Petition

The Commission may deny the petition if it finds that the currently available information either (1) does not establish a reasonable likelihood that there are unreasonable risks of injury associated with small parts that would be adequately reduced by the requested rule or (2) shows that the existing voluntary standard is likely to eliminate or adequately reduce these risks of injury and that substantial conformance with the voluntary standard is likely. If the Commission votes to deny this petition, the staff will prepare a draft letter of denial to the petitioners for the Commission's consideration.

RECOMMENDATION

The AED/ODs' recommendations and supporting rationale reflect a lack of staff consensus on the overall suggested recommendation for Commission denial.

Whereas there is general agreement that the petition has merit and the existing regulation may need to be reviewed and evaluated, AEDs/ODs disagree on the approach. The Directorates for Field Operations, Epidemiology, Economic Analysis, Health Sciences and the Offices of Information and Public Affairs and Program Management and Budget recommend denying the petition with a continued commitment to the FY 88/89 Choking Hazards Project.

The Directorates for Engineering Sciences and Compliance and Administrative Litigation recommend to grant in part and issue an advance notice of proposed rulemaking. These organizations believe that sufficient information exists to initiate activities aimed at improving the existing regulation.

The disagreement between whether to grant or deny the petition revolves around some or all of the following issues and uncertainties as reflected by individual Directorates or Offices:

1) The petitioners have used the Commission's own data to illustrate that toys which comply with the requirements of the current regulation have been involved in fatal choking incidents.

2) The existing data does not suppport rulemaking. The petitioners neither demonstrate that there are "unreasonable" risks nor show that the current requirements are inadequate. Also, they have not established how many deaths/injuries might be prevented if the petition is granted.

3) The design of the small parts cylinder evolved from size criteria recommended by the Accident Prevention Committee of the American Academy of Pediatrics (AAP) that were intended to prevent acute tracheal obstruction. Toys which fit into the cylinder but because of their length protrude above the top surface comply with the regulation but still present a choking hazard when compared to the original AAP size criteria.

4) The available information is not sufficient to determine if the test fixture proposed by the petitioners is the appropriate solution. It is felt by some staff that judgment should be reserved on the type and size of the test fixture until the nature of the risk is more clearly identified.

5) The Commission is already committed to a Choking Hazards Project for FY 88/89. Until the work is completed on this project, any recommendation that is made beforehand is based on speculation on the outcome of future studies.

6) If after reviewing all of the data, the Commission should decide on a mandatory rule, it should not be limited to the approach outlined by the petitioners.

7) Granting the petition in part and publishing an advance notice of proposed rulemaking would help to ensure continued support of the project over the next two to three years until the evaluation is completed and recommendations are developed and implemented.

The reader is referred to individual memoranda from Directorates and Offices at Tab F. These memoranda reflect their individual rationale.

The majority of staff recommends denying this petition. While the occurrence of choking incidents on toys larger than the small parts test fixture suggests that this fixture may be too small, it is believed that granting the petition is premature based on the data currently available.

The staff does not believe existing data are sufficient to support rulemaking. However, a project has been approved in the FY '88 Operating Plan to collect and evaluate data on choking incidents. When completed, staff will prepare a range of options for Commission consideration. This work is scheduled to be completed in FY '90.

ATTACHMENTS

Tab A - Memorandum from Lacy, J.V. and Lemberg, S. (OGC) to Noble, D. (OPMB) , "Petition to Amend the Small Parts Regulation, HP 87-2," May 6, 1987.

- Consumer Federation fo America (CFA) News Release: "Government Regulation Fails to Protect Children: Inadequate CPSC Small Parts Test Device Allows Unsafe Children's Products on the Market," April 10, 1987.

- Cover letter from Fise, M.E.R. (CFA) to Dunn, S. (CPSC) transmitting Petition, April 10, 1987.

Attachments: 1) Petition submitted jointly by CFA and New York Attorney General to amend the Small Parts Regulation.

2) Letter from Dreyer, B.P., M.D. (N.Y.U. School of Medicine) to Speath, P., Esq. (NY State Dept. of Law), January 15, 1987.

3) "Human Factors Analysis: Choking Incidents in Children," November 1983.

Tab B - Memorandum from Tinsworth, D. (EPHA) to Tyrrell, E. (OPMB), Fy '88 Choking Hazards Project," November 12, 1987.

Tab C - Memorandum from Tinsworth, D. (EPHA) to Tyrrell, E. (OPMB), "Small Parts Petition, HP 87-2," November 12, 1987.

Tab D - Memorandum from Deppa, S.W. (EPHF) to Tyrrell, E. (OPMB), "Human Factors Input to Small Parts Petition Briefing Package," November 19, 1987.

Tab E - Memorandum from Karels, T.R. (ECSS) to Tyrrell, E.A. (EX-P), "Small Parts Petition -- HP 87-2, November 10, 1987.

- Attachment is marked RESTRICTED: "Toy and Game Industry - A Market Sketch," August 1985.

Tab F - Memorandum from Roma, A.L. (AEDFO) to Tyrrell, E. (OPMB), "Briefing Package on Petition HP 87-2 -- Amend the Small Parts Regulation," November 30, 1987.

- Memorandum from Verhalen, R.D. (EP) to Tyrrell, E. (OPMB) "Epidemiology Position on Petition HP 87-2 Amend the Small Parts Regulation," November 30, 1987.

- Memorandum from Prunella, W.J. (EC) to Noble, D.L. (OPMB) "Petition HP 87-2 to Amend the Small Parts Regulation," Novermber 30, 1987.

- Memorandum from Ulsamer, A.G. (HS) to Tyrrell, E. "Small Parts Petition," December 1, 1987.

- Memorandum from Shiflett, D. (OIPA) to Tyrrell, E. (OPMB) "Petition HP 87-2 to Amend the Small Parts Regulation," November 30, 1987.

- Memorandum from Walton, W.W. (ES) to Tyrrell, E. (EX-PB) "Petition HP 87-2 to Amend the Small Parts Regulation," November 30, 1987.

- Memorandum from Hobby, W. (OPE) to Tyrrell, E. (OPMB) "Briefing Package on Petition HP 87-2," November 30, 1987.

- Memorandum from Schmelter, D. (CA) to Tyrrell, E. (OPMB) "Small Parts Petition -- AEDCA Recommendation," November 30, 1987.

- Memorandum to the File from D. Noble (OPMB) "Petition HP 87-2 to Amend 16 C.F.R. Section 1501.4," December 4, 1987.

UNITED STATES GOVERNMENT

MEMORANDUM

U.S. CONSUMER PRODUCT
SAFETY COMMISSION
WASHINGTON, D.C. 20207

May 6, 1987

TO : Douglas Noble, Director, OPMB

Through: Leonard DeFiore, Executive Director
Sadye E. Dunn, Secretary

FROM : James V. Lacy, General Counsel
Stephen Lemberg, Assistant General Counsel

SUBJECT: Petition to Amend the Small Parts Regulation, HP 87-2

Attached is an April 20, 1987 submission from the Consumer Federation of America and the New York State Attorney General's Office requesting an amendment of the Commission's small parts regulation. It should be docketed as a rulemaking petition under the Federal Hazardous Substances Act (FHSA).

The submission satisfies the regulatory requirements for petitions (16 CFR Part 1051):

(1) It applies to toys and other articles intended for use by children.

(2) It requests that the diameter of the small parts cylinder specified at 16 CFR § 1501.4 (Figure 1) be increased from 1.25 inches to at least 1.68 inches, in order to substantially decrease choking incidents. The requested amendment, if promulgated, would ban certain toys and children's articles that are not banned under the existing requirements.

(3) The facts claimed to support the need for an amendment of the small parts regulation are derived from a CPSC Human Factors analysis of choking incidents in children (1983), a 1986 CPSC listing of choking incidents from in-depth investigations, and a written opinion by Bernard Dreyer, M.D.

Regulatory considerations

The FHSA statutory mechanism for changing the size of the existing small parts cylinder would be to declare, under the authority of sec. 2(f)1(D), that toys and other articles intended for use by children under 3 years of age that fail to meet the new test criteria are hazardous substances, based on the sec. 2(s) definition of "mechanical hazard." Once a toy or other article intended for use by children is declared to be a hazardous substance, it is a "banned hazardous substance" under sec. 2(q)(1)(A).

CPSA 6 (b)(1) Cleared
5/6/87
No Mfrs/PrvtLblrs or Products Identified
X Excepted by Pat Predg
Firms Notified,

NOTE: This document has not been reviewed or accepted by the Commission.
Initial ____ Date 5/6/87

14

The procedures in sec. 3(e) - (j) would control the issuance of an amendment. If the Commission granted the petition and decided to commence a rulemaking proceeding, it would issue an advance notice of proposed rulemaking, followed by a comment period, issuance of a proposed rule, another comment period, and issuance of a final rule.

The staff briefing package should focus on factors relevant to whether it is necessary to amend the test cylinder and should include an analysis of whether the existing rule (and any existing voluntary standard) is adequate to reduce choking, aspiration, and ingestion risks associated with toys and other articles intended for use by children under the age of 3. If an amendment does appear to be necessary, the appropriateness of the amendment suggested by the petitioners should be analyzed and, if possible, the benefits and costs of the amendment (and any reasonable alternatives) should be estimated.

We would be happy to discuss any additional issues that arise during the course of the staff's consideration of this petition.

Consumer Federation of America

FOR RELEASE:
HOLD FOR Monday, April 20, 1987

Contact: Mary Ellen Fise
(202/387-6121)

GOVERNMENT REGULATION FAILS TO PROTECT CHILDREN: INADEQUATE CPSC SMALL PARTS TEST DEVICE ALLOWS UNSAFE CHILDREN'S PRODUCTS ON THE MARKET

Washington, D.C. For over seven years the federal Consumer Product Safety Commission (CPSC) has been using an inadequate testing device as the means to protect America's children from hazardous small objects. Citing this inadequate mandatory standard for small parts, the Consumer Federation of America (CFA) and the New York State Attorney General's office today petitioned the CPSC requesting a more stringent small parts requirement.

A 1983 CPSC report indicates that almost two-thirds of the choking incidents examined involved products capable of passing the government test. At least 37 choking deaths examined by CPSC involved products in compliance with the existing government regulation.

The risk associated with choking on small toys or parts of toys include laceration of the soft tissue of the throat, lodging of small objects in the lungs, infection and secondary collapse of the lungs, asphyxiation, brain damage and death. Children who have choked on toys, or parts of toys, have suffered all the above injuries and some have died.

"Parents and other purchasers of children's toys and products are being duped by age labels predicated upon the CPSC small parts requirement. They believe that because a product's label states that the toy is appropriate for babies newborn through three years, that the product is safe and will not pose a choking hazard. Unfortunately, this is not the case because the current mandatory standard allows toys capable of being choked on to be labeled for these children," commented Mary Ellen Fise, Product Safety Director of CFA.

Under the current small parts regulation toys and other products intended for children under age three must not present a choking, aspiration or ingestion hazard. To determine whether a product poses one of these hazards the government relies on the small parts test cylinder. This truncated test cylinder has a 1.25 inch diameter and a depth ranging from 1 to 2.25 inches. If a toy intended for children under age three fits within the test cylinder, it is considered a banned hazardous substance and its sale is prohibited. However, if any part of the object protrudes from the cylinder, the object does not fail and may be sold for use by children under age three. For example, if a toy has a diameter of .8 inches, and easily fits within the cylinder, but is 2.26 inches long and sticks out of the cylinder by .01 inches, the toy is not considered a small part.

The petition by CFA and the NY Attorney General's office seeks a change in the small parts test. The petitioners have asked CPSC to design a new small parts standard in which a diameter of at least 1.68 inches is required for all toys intended for children under three years of age (see figures below). Rattles and pacifiers are already governed by the more stringent 1.68 inch diameter requirement.

The petition further argues that the standard's length requirement is irrelevant in preventing choking. A 1983 CPSC report indicates that the objects in at least 49 of the total 136 choking incidents (for which size of the objects involved were known) were smaller than the standard's diameter requirement. Yet, because these objects were longer than the standard's length requirement, they passed the test and cannot be considered small parts even though they caused choking incidents and deaths.

"The CPSC can not continue to ignore the deaths and choking incidents resulting from toys that meet the current standard. The action we have sought will go a long way toward reducing this toll. We urge the Commission's swift attention to this problem," stated Robert Abrams, Attorney General of the State of New York.

CFA's Fise recommends that parents conduct their own small parts safety test by measuring the diameter of the toy or toy part at its largest or widest point. "If the diameter is less than 1.68 inches (or approximately 1 and 11/16 inches on rulers or tapes), put that toy away until your child is at least three years of age, or older if they still mouth objects at age three. Also, keep in mind that toys intended for children age three and up do not have to meet any small parts requirement, so an older sibling's toys can likely pose a choking hazard to a younger child," stated Fise.

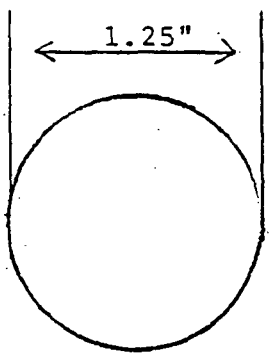

Small parts diameter contained in current CPSC requirement.

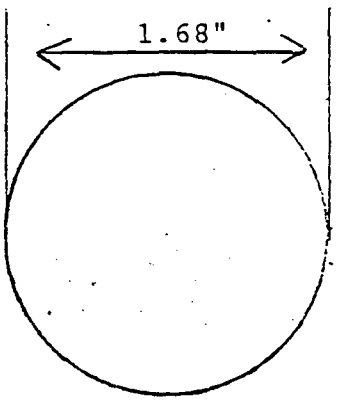

Small parts diameter recommended by petitioners. Products with diameters smaller than this circle pose a choking hazard to young children.

# # # # #

Consumer Federation of America is the nation's largest consumer advocacy organization representing over 200 organizations and over 30 million consumers.

The New York State Attorney General is the chief legal officer of the state and is charged with enforcing New York's hazardous toy statute.

APR 17 1987

Consumer Federation of America

April 20, 1987

Ms. Sadye Dunn
Secretary
Consumer Product Safety Commission
5401 Westbard Ave.
Bethesda, MD 20207

Dear Ms. Dunn:

Enclosed for docketing is a petition being jointly filed by the New York Attorney General's office and the Consumer Federation of America.

Thank you for your attention to this matter.

Sincerely,

Mary Ellen R. Fise
Product Safety Director and
Attorney for Petitioner.

cc: the Commission

1424 16th Street, N.W., Suite 604 • Washington, D.C. 20036 • (202) 387-6121

18

IN THE UNITED STATES OF AMERICA
BEFORE THE CONSUMER PRODUCT SAFETY COMMISSION

In the Matter of
The Petition of the New York Attorney General and the Consumer Federation of America to Amend the Small Parts Test Standard

No._____

Pursuant to the Administrative Procedure Act, 5 U.S.C. Section 553(e) and regulations of the Consumer Product Safety Commission ("CPSC"), 16 C.F.R. sections 1500.201 and 1051, the People of the State of New York, by Robert Abrams, Attorney General of the State of New York and the Consumer Federation of America hereby petition the CPSC to amend 16 C.F.R. section 1501.4 to require that the size of the small parts test cylinder be enlarged.

I

INTEREST OF PETITIONERS

The New York State Attorney General brings this petition as parens patriae and as chief legal officer of New York charged with enforcing, inter alia, the State's hazardous toy statute, General Business Law §396-k, on behalf of the citizens of the State of New York. The petitioner particularly seeks to protect the health, well-being and safety of the children of this State.

The Consumer Federation of America ("CFA") is the nation's largest consumer advocacy organization representing over 200 organizations and over 30 million consumers. CFA

brings this petition on behalf of its members and all children affected by the small parts regulation.

II

HAZARDS PRESENTED BY SMALL PARTS

This petition addresses the various risks to children associated with choking on small toys or parts of toys. The risks include, among others, laceration of the soft tissue of the throat, lodging of small objects in the lungs; infection and secondary collapse of the lungs; asphyxiation; brain damage; and death. These are not mere theoretical risks. Children who have choked on toys, or parts of toys, have suffered all the above injuries and some have died. For example, in 1985 alone, small toys or parts thereof were responsible for 12,000 injuries; between January, 1985 and September, 1986, at least 18 children died as a result of choking on toys.*

III

THE SMALL PARTS STANDARD

The Federal Hazardous Substances Act ("FHSA"), 15 U.S.C. 1261 et seq. and its regulations, 16 C.F.R. 1500.18(a)(9), prohibit the sale for use by children under three years of age of toys, or other articles intended for use by children, which present a choking, aspiration or ingestion hazard. Volume 16 C.F.R. 1501.4 provides a test method ("the standard") for determining whether an article

* Data Update on Toy Related Injuries, 1986, October 1986 Deborah Tinsworth, CPSC Directorate for Epidemilogy

20

presents these hazards.

Under this standard, no toy intended for children under three years of age should be small enough to fit entirely within a truncated test cylinder with a 1.25 inch diameter and a depth ranging from 1 to 2.25 inches. (See Figure 1.) If a toy intended for children under three does fit within the test cylinder, it is considered a banned hazardous substance under the FHSA and its sale is prohibited. However, if any part of the object protrudes from the cylinder, the object does not fail and may be sold for use by children under age three. For example, if a toy has a diameter of .8 inches, and easily fits within the cylinder, but is 2.26 inches long and sticks out of the cylinder by .01 inches, the toy is not considered a small part.

IV

INADEQUACY OF THE STANDARD

The small parts standard, as presently written, fails to achieve its intended purpose. Children under the age of three are choking on toys that comply with the standard. CPSC studies and statistics, as discussed below, reveal the inadequacy of the small parts standard.

A. 1983 Study

Statistics gathered by CPSC indicate that between 1973 and 1983, 195 choking incidents, including 37 deaths, were caused by toys or children's products larger than the standard. See Exhibit A, Human Factors Analysis: Choking

Incidents in Children, CPSC 1983. These incidents occurred in children ranging in age from one month to four years. Objects involved were either toys, rattles or pacifiers.

Specific product size was available for 136 of the products involved in these reported incidents, 18 of which resulted in death. (See Table 1.) Almost two-thirds of these choking incidents involved products with diameters greater than that of the standard.* Five of the 18 deaths involved products larger than the 1.25 inch diameter of the standard.** Forty-nine of the total of 136 incidents involved products smaller in diameter but longer in length than the standard.* These products would not be considered hazardous under the current standard, yet they resulted in a significant number of choking incidents.

1. Toys

Based upon CPSC's 1983 study, more than half of the total 195 choking incidents involved young children using toys intended for children under three which were larger than the standard. The toys involved in these incidents included: pushing toys, stacking toys, toy musical instruments, small dolls, toy microphones and miscellaneous other toys including squeeze toys (See Table 2). Because products having diameters of 1.57 inches (two cases), and

* Human Factors Analysis: Choking Incidents in Children CPSC 1983 p.13

** In addition, three more deaths resulted from products measuring between 1.2 and 1.29 inches in diameter which may have been larger than the 1.25 inch diameter of the standard.

22

1.65 inches (one case) caused deaths, it is apparent that the airway can be blocked by objects of this size.

2. Rattles and Pacifiers

Rattles and pacifiers, which are presently regulated under different, more stringent requirements than those of the small parts standard were included in CPSC's 1983 report. (Since February, 1975, a CPSC regulation, 16 C.F.R. part 1511, has mandated that pacifiers have shields measuring at least 1.68 inches in diameter. Since June, 1978, a CPSC regulation, 16 C.F.R, part 1510, has mandated that rattles have diameters of at least 1.38 inches.)

Out of the 136 choking incidents for which product size is known, 69 involved rattles; 58 of these rattles had diameters larger than the small parts standard's diameter. (See Table 2) Fifty-seven of the 58 choking incidents involving rattles were caused by rattles larger than CPSC's mandatory rattle regulation. Because rattles which complied with CPSC's rattle regulation were involved in so many choking incidents, CPSC encouraged the toy industry to write a more stringent voluntary standard. A voluntary rattle standard, adopted by the toy industry in 1986, requires a minimum diameter of 1.68 inches. See ASTM F963-86, April 1, 1986.

In addition, of the nine choking incidents involving pacifiers, four involved pacifiers that were larger than the small part standard's diameter requirement. (See Table 2)

B. 1986 Report

In July 1986, CPSC released new data on choking incidents derived from in-depth investigations conducted by CPSC covering the period 1978-1986. (These were not all of the choking incidents which occurred but only the incidents CPSC investigated.) The data revealed the following: Of 82 choking incidents investigated, 19 resulted in death. Thirteen of the 82 incidents involved children under three years of age who choked on toys the same as or larger than the standard. Of the 13 choking incidents, 8 children under age three died . While the data did not indicate what physical damage was incurred by the survivors of the 13 choking incidents, it did specify the location of the object choked upon, which was most often the throat. In one instance, a rubber ball measuring 1.65 inches in diameter was found in an eighteen month old's esophagus by an emergency medical technician.

V

CONCLUSIONS

The statistics cited above reveal that toys, rattles and pacifiers measuring larger in diameter than the standard's requirement have caused choking incidents; it is obvious that the small parts standard is inadequate to prevent choking. Pacifiers, under CPSC regulations, and rattles, under the voluntary standard deferred to by CPSC now must have a minimum diameter of 1.68 inches; toys should be governed by no less stringent a standard.

Moreover, the standard's length requirement is irrelevant in preventing choking. Only an adequate diameter requirement will prevent choking incidents. CPSC's 1983 report indicates that the objects in at least 49 of the total 136 choking incidents for which size of the objects involved is known were smaller than the standard's diameter requirement. Yet, because these objects were longer than the standard's length requirement, they passed the test and cannot be considered small parts even though they caused choking incidents and deaths.

CPSC, in promulgating the standard applied to toys, subscribes to an "either or" philosophy: a manufacturer can choose to meet the diameter requirement or the length requirement.* In reality, length is irrelevant in eliminating choking incidents. A proper mandatory diameter requirement is the only factor which will adequately prevent choking incidents in children.

Bernard Dreyer, M.D., Director of Bellevue Pediatric Resource Center and Associate Professor of Clinical Pediatrics at N.Y.U. Medical School, reviewed CPSC's 1983 report and concluded that the diameter standard should be increased to greater than 1.65 inches (See Dr. Dreyer's letter attached as Exhibit B.)

* This approach is different from that adopted by CPSC in the rattle and pacifier standards which rely on mandatory diameter requirements.

VI

ACTION REQUESTED

The New York State Attorney General and CFA request that CPSC amend 16 C.F.R. Section 1501.4 to design a new small parts standard in which a diameter of at least 1.68 inches is required for all toys intended for children under three years of age. The data in both the 1983 and 1986 CPSC reports, as well as Dr. Dreyer's statement, indicate that increasing the diameter of the small parts test standard from 1.25 inches to 1.68 inches would substantially reduce the number of choking incidents which occur in infants and young children. It is obvious that the current standard does not adequately serve the purpose of the FHSA. The Attorney General and CFA believe the data offered in this petition mandate a change in the small parts regulation.

Dated: April 20, 1987

Respectfully submitted,

ROBERT ABRAMS,
Attorney General of the
State of New York
Attorney for Petitioner
120 Broadway
New York, N.Y. 10271
(212) 341-2305
Bureau of Consumer Frauds
and Protection

PETER BIENSTOCK
Assistant Attorney General
In Charge
MARY HILGEMAN
PHYLLIS B. SPAETH
Assistant Attorneys General
and

MARY ELLEN FISE
Attorney for Petitioner
Consumer Federation of America
1424 16th Street. N.W. Suite
Washington, D. C. 20036
(202) 387-6121

TABLE 1

SIZE OF PRODUCTS INVOLVED IN CHOKING INCIDENTS

DIAMETER (INCHES)

	TOTAL KNOWN	1.00	1.00 to 1.19	1.20 to 1.29	1.30 to 1.39	1.40 to 1.49	1.50 to 1.59	1.60 to 1.69	greater than 1.69
TOTAL	136	5	44	9	3	6	60	4	5
FATALITIES	18	2	8	3	-	-	4	1	-
NON-FATALITIES	118	3	36	6	3	6	56	3	5

NUMBER OF CHOKING INCIDENTS

Product Type by Number of Fatalities and Non-Fatalities

Product	Total	Fatalities	Non-Fatilities
Total	195	37	158
Squeeze Toys	9	4	5
Pattles	97	14	83
Pacifiers	9	3	6
Other Toys	80	16	64

Source: 1983 CPSC HUMAN FACTORS ANALYSIS

DIAMETER IN INCHES

TABLE 2

	TOTAL	1.00	1.00 to 1.19	1.20 to 1.29	1.30 to 1.39	1.40 to 1.49	1.50 to 1.59	1.60 to 1.69	greater than 1.69	UNKNOWN
TOTAL	195	5	44	9	3	6	60	4	5	59
Squeeze Toys	9	2	4	-	-	-	-	-	-	3
Rattles										
Pre-Standard	36	-	5	6	-	-	-	-	1	24
Post standard	61	-	-	-	-	5	51	1	-	4
Pacifiers	9	-	-	-	-	1	2	-	1	5
OTHER TOYS										
Teethers	11	-	-	-	1	-	-	-	1	9
Crib Gyms	6	-	3	1	-	-	1	-	-	1
Push Toys	4	-	-	-	-	-	4	-	-	-
Stacking Toys	6	1	-	-	1	-	-	-	-	4
Toy Instruments	8	-	2	1	-	-	-	2	2	1
Small Dolls	32	1	30	-	-	-	-	-	-	1
Toy Microphones	3	-	-	-	-	-	2	1	-	-
Miscellaneous	10	1	-	1	1	-	-	-	-	7

Source: 1983 CPSC HUMAN FACTORS ANALYSIS

FIGURE 1 - TRUNCATED RIGHT CYLINDER

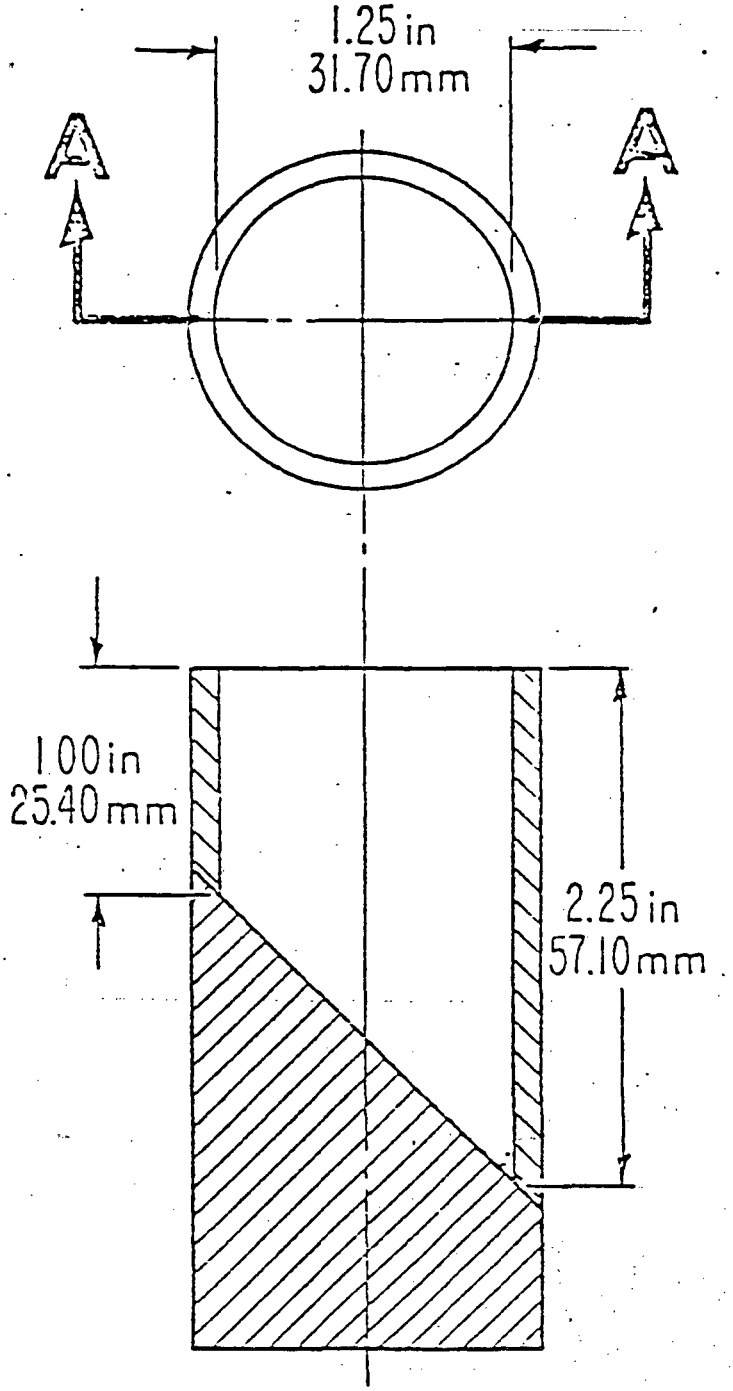

If the object or part to be tested fits entirely within the cylinder it fails the test. If any part of the object protrudes from the cylinder, the object does not fail.

NYU Medical Center

550 First Avenue, New York, NY 10016
Cable Address: NYUMEDIC

Department of Pediatrics
(212) 340-

January 15, 1987

Phyllis Spaeth, Esq.
New York State Department of Law
120 Broadway, 3rd Floor
New York, New York 10271

Dear Ms. Spaeth,

I have reviewed the two reports from the U.S. Consumer Product Safety Commission that you mailed to me. On the basis of those reports, I would agree with your concern that the present small parts toy standard (1.25 inch diameter x 1-2.25 inch length) may very well be inadequate to prevent the ingestion, choking, or aspiration of small part toys by children under the age of three. There is certainly good evidence that articles with diameter as large as 1.65 inches have been implicated in severe choking incidents in this age group. I therefore would wholeheartedly support your petition for a change in the small parts regulation.

As I am sure you are aware, aspiration of such small parts into the upper respiratory tract or pharynx can lead to severe asphyxia, brain damage, and even death in otherwise normal and healthy young children. It is thus of extreme importance to modify this ruling as expeditiously as possible.

I would like to offer any assistance you require to pursue these changes. Feel free to include my comments or excerpts of my comments in any petition or document you prepare.

Sincerely,

Benard P. Dreyer, M.D.
Associate Professor of
Clinical Pediatrics
N.Y.U. School of Medicine

Director of Bellevue Pediatric
Resource Center

BPD/pnxu

NYU Medical Center
School of Medicine
Post-Graduate Medical School
University Hospital
Rusk Institute of Rehabilitation Medicine

New York University
A private university in the public service

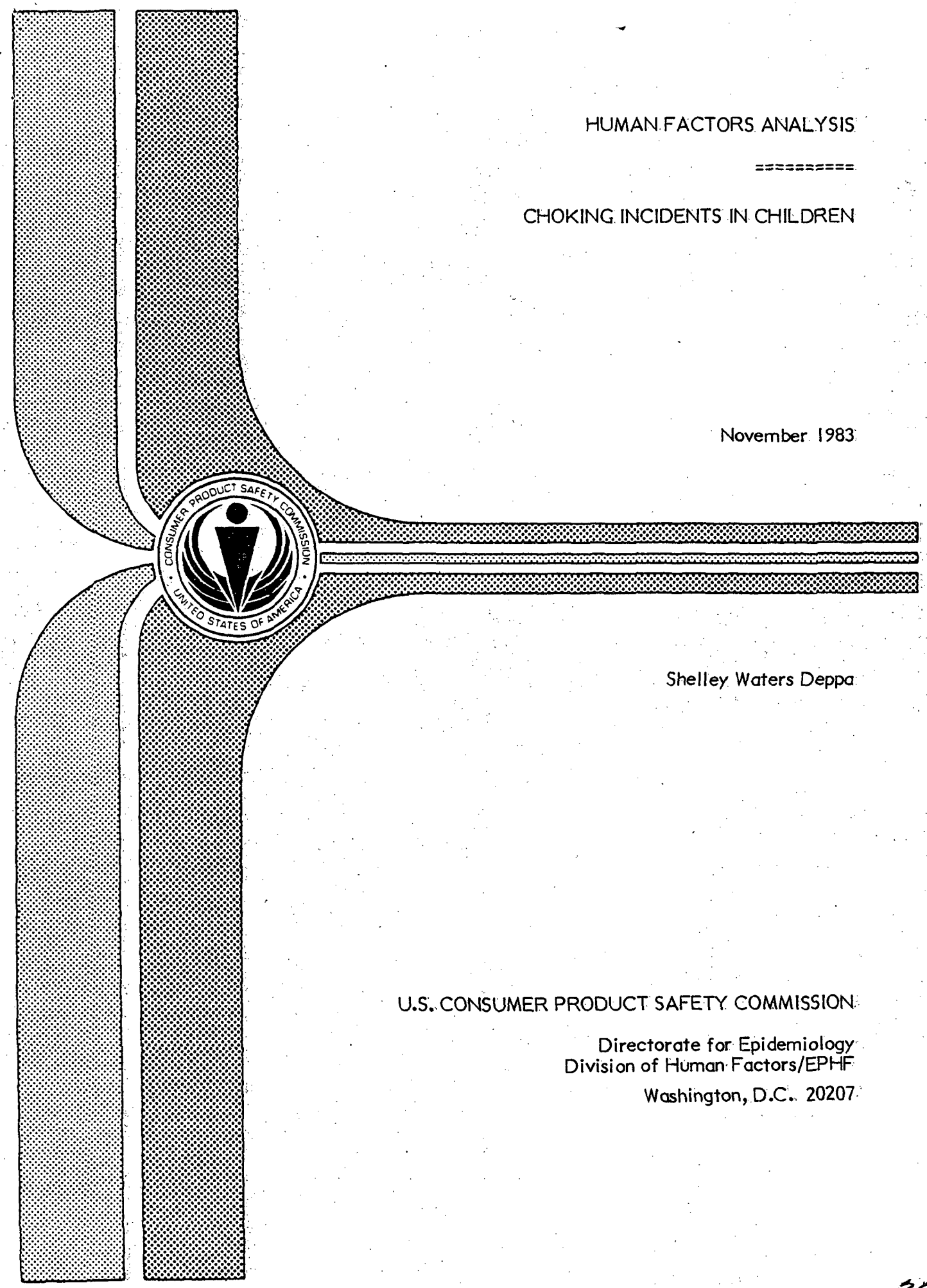

HUMAN FACTORS ANALYSIS

==========

CHOKING INCIDENTS IN CHILDREN

November 1983

Shelley Waters Deppa

U.S. CONSUMER PRODUCT SAFETY COMMISSION

Directorate for Epidemiology
Division of Human Factors/EPHF
Washington, D.C. 20207

TABLE OF CONTENTS

Summary . . . . . Page 1

Background . . . . . Page 2

Methodology. . . . . Page 2

Product Characteristics. . . . . Page 3

Human Characteristics . . . . . Page 6

Interaction Between Human and Product Characteristics. . . Page 11

Remedial Strategies . . . . . Page 12

Bibliography . . . . . Page 16

Preliminary Evaluation of Choking Potentials with Squeeze Toys. . . . . Appendix 1

Discussion of Choking Incidents by Product Type. . . . . Appendix 2

Product Characteristic Tables. . . . . Appendix 3

Human Characteristic Table. . . . . Appendix 4

Federal Regulation Test Fixtures. . . . . Appendix 5

Comparison of Product Sizes to Federal Regulation Test Fixtures . . . . . Appendix 6

Remedial Strategies - Generic Test Fixtures . . . . . Appendix 7

SUMMARY

A Human Factors analysis was performed of 195 choking incidents, including 37 deaths, in children. Only choking incidents with products larger than the cavity in the small parts test fixture were reviewed. These incidents were associated with products such as squeeze toys, rattles, pacifiers, and other toys (teethers, crib gyms, push toys, stacking toys, toy musical and work instruments, small dolls, toy microphones, and miscellaneous toys).

The objects involved in choking incidents were evaluated to identify which product characteristics contribute to choking. Similarities in size and configuration were identified. In general, objects involved in these choking incidents were 1.65 inches in diameter or less, with smooth surfaces and flared or spherical ends.

To determine why these characteristics may lead to choking, human characteristics of the victims were analyzed. While children involved in choking incidents ranged from one month to four years of age, about half of them were between four and eight months. The victims can be divided into two distinct age groups, based on the type of toys involved, infants (those under 12 months), and toddlers (those 12 months through 2 years).

The sizes of objects involved in choking incidents were compared to the test fixtures specified in the three Federal regulations intended to eliminate small parts, rattles, and pacifiers with choking potential. While all the regulations have been effective in eliminating many hazardous products from the marketplace, choking incidents are still occurring. Since the characteristics that led to choking are not product specific, two proposals for a generic test fixture to screen all products intended for children under the age of three were developed.

BACKGROUND

In early 1982, the Commission staff became aware of two deaths in which the handles of squeeze toys became lodged in the throats of infants, causing them to choke. Both fatalities were associated with toys imported by one firm. The Commission staff negotiated with the importer to obtain a satisfactory plan for public notification of the hazard presented by these toys, and for recall of all squeeze toys of that type. The Commission staff also inspected other manufacturers, importers, and retailers of similar toys and determined that other squeeze toys were being marketed which possess similar physical characteristics. These characteristics were preliminarily identified in our August 19, 1982, memorandum entitled "PSA Request, Criteria for Evaluating Which Squeeze Toys Present Choking/Suffocation Potentials" (Appendix 1).

Since these characteristics are not unique to squeeze toys, other infant toys involved in choking incidents were evaluated to determine which characteristics led to choking. Three approaches were examined. First, while squeeze toys are subject to the small parts regulation (16 C.F.R. Part 1501), the ones involved in choking incidents would not have been considered small parts since they are greater in size than the cavity of the small parts test fixture. Therefore, while objects smaller than the cavity of the small parts test fixture have already been determined to present a choking hazard due to their size, objects larger than the test fixture opening which were involved in choking incidents, were evaluated to identify characteristics which led to choking.

Second, while squeeze toys are not subject to the rattle regulation (16 C.F.R. Part 1510), they are intended for a similar aged child and are intended to be used in a similar manner (hand-held), to rattles. Therefore, the sizes of squeeze toys involved in incidents were compared with the cavity of the rattle test fixture and with rattles involved in choking incidents. The squeeze toys in question are small enough to penetrate the cavity in the rattle test fixture and thus may constitute a choking hazard like that presented by rattles similar in size. Therefore, rattles involved in choking incidents were evaluated to determine which characteristics contributed to their choking potential.

Third, while squeeze toys are not subject to the pacifier regulation (16 C.F.R. Part 1511), they are compressible as are some pacifier shields, and are intended for a child of approximately the same age. Because of this similarity, the sizes of squeeze toys in question were compared with the opening of the pacifier test fixture and with pacifiers involved in choking incidents. The squeeze toys in question are smaller than the opening in the pacifier test fixture and thus may present a similar choking potential to pacifiers which can pass through the fixture. Therefore, pacifiers involved in choking incidents were analyzed to identify characteristics which led to choking.

METHODOLOGY

Children's products involved in choking incidents were compared with each other to identify similarities in characteristics, such as size, configuration, purpose, and intended user. In addition, medical literature on human characteristics was reviewed to determine why these characteristics may lead to choking. Once the product characteristics were identified, the second task was to develop remedial strategies to screen out the product characteristics that led to choking. Part of this task was to evaluate the three Federal regulations intended to eliminate small parts, rattles, and pacifiers with choking potential to determine whether they are adequate in accomplishing their purpose.

The definition of choking used in this study should be noted at the onset. Normally, when an object enters the air passageway (mouth and throat), it continues on to the food passageway. Choking occurs when respiration is interrupted by obstruction. The fatalities occurred when the object completely blocked all air flow and the guardian did not remove the offending object in time. The non-fatalities were either the result of an object restricting but not completely blocking the air, and/or a guardian removing the object from the mouth/throat quickly.

The incidents included in this paper were obtained from three information sources: 1) A search was done on CPSC's In-Depth, Consumer Complaint, and Death Certificate data bases. Since the products were so divergent, a search was conducted on each data base with codes that would be associated with choking incidents, such as nature of injury, injury diagnosis, external cause of death, and selected product codes. Because of the complexity of searching for choking incidents, some cases may have been missed. Since the cases were compiled for purpose of identifying human/product interaction, and were not intended to be a statistical representation, the cases identified satisfy the purpose of this report. 2) Some reports of choking incidents were provided to CPSC on request by manufacturers. 3) Three cases were provided to us by a foreign toy manufacturer's association. Most of the incidents included in this report occurred between July 1973 and May 1983. Since objects smaller than the small parts cylinder have already been regulated, the review was limited to larger objects.

PRODUCT CHARACTERISTICS

A review was performed on 195 choking incidents, including 37 deaths, in children. The objects in these incidents were grouped into four product types - squeeze toys, rattles, pacifiers, and other toys. (Table 1). The task at hand was to determine whether product characteristics exist which are common to most toys involved in choking incidents. In analyzing the incidents, there appear to be two noteworthy characteristics - size and configuration.

Before size can be discussed, a few terms need to be defined. Since product dimensions must be compared to corresponding dimensions of the mouth, product dimensions must be thought of in the orientation in which the product would enter the mouth. The dimensions of the mouth are width (side-to-side), height (top-to-bottom), and depth (front-to-back). Since the height and width of many products were equal, the term "diameter" will often be substituted for height and width. Thus, product dimensions will usually be discussed in terms of diameter and depth.

The size of the object, particularly the object's diameter is crucial in determining whether an object is capable of choking a child. A product must have a diameter small enough to enter a child's mouth, for choking to occur. Size was available for 136 of the choking incidents, 18 of which resulted in death. Out of these known diameters, all but 5 incidents involved products with diameters measuring 1.65 inches or less. The five remaining incidents occurred with objects measuring 1.87, 2.50, 2.75, and 3.50 inches (2 cases). The objects measuring 1.87 and 2.75 inches were compressible. The four largest objects were much larger in width than in height. (Table 2)

In examining the issue of diameter, compressibility and flexibility must also be considered, as all of the squeeze toys, several of the pacifier shields, and some of the teethers, involved in choking incidents were compressible or flexible. Since children have the capability to suck, gum, bite, or squeeze, they may compress or flex objects larger in diameter than the mouth so that these objects can fit into the mouth.

TABLE I

NUMBER OF CHOKING INCIDENTS

Product Type by Number of Fatalities and Non-Fatalities

Product Type	Total	Fatalities	Non-Fatalities
Total	195	37	158
Squeeze Toys	9	4	5
Rattles	97	14	83
Pacifiers	9	3	6
Other Toys	80	16	64

Source: U.S. Consumer Product Safety Commission
Directorate for Epidemiology/EPHF

A discussion of each product type is included in Appendix 2.

TABLE 2

SIZE OF PRODUCTS INVOLVED IN CHOKING INCIDENTS

Number of Fatalities and Non-Fatalities by Diameter

	Diameter (inches)								
	Total Known	<1.00	1.00 to 1.19	1.20 to 1.29	1.30 to 1.39	1.40 to 1.49	1.50 to 1.59	1.60 to 1.69	>1.69
Total	136	5	44	9	3	6	60	4	5
Fatalities	18	2	8	3	–	–	4	1	–
Non-Fatalities	118	3	36	6	3	6	56	3	5

Note: If product was not exactly round, dimension quoted is largest dimension of width or height.

Source: U.S. Consumer Product Safety Commission
Directorate for Epidemiology/EPHF

More detail is provided in Appendix 3a.

38

For choking to occur, the depth of an object must be at least large enough to extend to the back of the throat. There appears to be no upper limit on depth, since excess depth can extend out of the mouth. Depth is one factor that may determine whether a choking incident would result in a death or injury, when direct supervision is present. For example, with objects having small depths, a guardian was not always able to grasp the object in the back of the throat to remove it, and in some instances, the child died. When the object was considerably larger in depth, and extended out of the mouth, a guardian could grasp the object to dislodge it, before death occurred. It was only when children, who had objects with large depths in their mouths, were unsupervised that death occurred; such as, when children were put into their cribs to sleep with rattles or squeeze toys. However, while objects that are large enough to extend out of the mouth have the advantage that they can be grasped by guardians, these objects also have a disadvantage over objects with smaller depths. Specifically, children who have these large objects in their mouths may roll or fall onto their faces, thereby forcing these objects into their throats.

Second, the configuration of an object appears to be important in determining how likely it is to enter the mouth and throat and become lodged there. For example, smooth objects (such as a toy telephone receiver) were implicated more often than rough objects (such as a toy giraffe head with bumps for ears, horns, nose, and mouth). We are aware of configuration on 177 toys involved in choking incidents, including 27 deaths. Of these incidents, over three-fourths of the cases (139 including 23 deaths) had spherical or flared ends. Examples of these include a knob on a handle (spherical end - all sides rounded except side connected to handle) or a toy telephone receiver (flared end - at least one side not rounded besides side connected to handle). In addition, there were 13 incidents with rounded objects, including 5 spheres (such as balls), and 8 cylindrical objects (such as a toy garbage can). (Table 3)

HUMAN CHARACTERISTICS

In order to develop proposed intervention strategies to reduce or eliminate further incidents, it must be determined why the identified product characteristics are causing choking. To determine this, the population at risk was identified and the characteristics of that population determined. This question was approached in two ways - by a review of the choking incidents, and by a review of the child development and medical literature.

Age of the child was specified in 169 cases, including all of the deaths. Children involved in the choking incidents ranged from one month to four years of age. Over one-half of these children involved in choking incidents, where age was known, were between 4 and 8 months of age. (Table 4)

Based on the ages of the victims, the toys fall into two distinct groups - infant toys and toddler toys. Infant toys, which include squeeze toys, rattles, pacifiers, teethers, and crib gyms, comprise 132 of the choking incidents, including 23 deaths. Most of these victims were under 12 months of age. Toddler toys, which include push toys, stacking toys, toy musical and work instruments, small dolls, and toy microphones, are involved in 53 of the incidents, 8 of which were deaths. Most of these children were 12 months through 2 years of age. (Table 5)

There are developmental reasons why children do not generally begin to be involved in choking incidents until about 4 months of age. First, very young infants have little awareness of their external environment, and thus do not play with toys. Infants do not become capable of bringing objects to their mouths, and actively mouthing them on their

TABLE 3

CONFIGURATION OF PRODUCTS INVOLVED IN CHOKING INCIDENTS

Number of Fatalities and Non-Fatalities by Configuration

	Total Known	Configuration				
		Spheres	Spherical Ends	Flared Ends	Cylinders	Others
Total	177	5	107	32	8	25
Fatalities	27	–	10	13	–	4
Non-Fatalities	150	5	97	19	8	21

Source: U.S. Consumer Product Safety Commission
Directorate for Epidemiology/EPHF

More detail is provided in Appendix 3b.

TABLE 4

AGE OF VICTIMS INVOLVED IN CHOKING INCIDENTS

Number of Fatalities and Non-Fatalities by Age of Victim

	Total Known	AGE												
		≤ 3 mo.	4 mo.	5 mo.	6 mo.	7 mo.	8 mo.	9 mo.	10 mo.	11 mo.	1 yr.	2 yr.	3 yr.	4 yr.
Total	169	9	13	21	33	17	11	6	7	7	27	13	4	1
Fatalities	37	2	2	3	6	4	4	1	3	2	8	2	-	-
Non-Fatalities	132	7	11	18	27	13	7	5	4	5	19	11	4	1

Source: U.S. Consumer Product Safety Commission
Directorate for Epidemiology/EPHF

More detail is provided in Appendix 4a.

TABLE 5

AGE OF VICTIMS INVOLVED IN CHOKING INCIDENTS

Type of Toy by Age of Victim

Type of Toy	AGE								
		Months			Years				
	Total	<3	4-7	8-11	1	2	3	4	Unknown
TOTAL	195	9	84	31	27	13	4	1	26
Infant Toys	132	8	80	21	5	-	-	-	18
Toddler Toys	53	-	2	7	20	12	4	-	8
Miscellaneous	10	1	2	3	2	1	-	1	-

Source: U.S. Consumer Product Safety Commission
Directorate for Epidemiology/EPHF

own, until about 4 months of age. Starting at this age, extra sucking for reasons other than nourishment, increases, so children bring objects to their mouths to suck on them. Since the extrusion reflex (tongue thrusting) used for sucking and to push anything non-liquid out of the mouth, disappears at 4 to 5 months of age, objects may remain in the mouth. Teething also begins around this age, causing children to put objects in their mouths in order to gum them in an attempt to relieve pain. In addition, since at this age, the mouth is one of the most important sources of sensory inputs, children explore their world by manually bringing things into their mouths for manipulation and exploration.

The choking incidents begin to decline after 8 months of age, also largely for developmental reasons. For one thing, at this age, children are progressing from mouthing to manipulation play; that is, children begin to use the thumb-finger apposition more effectively, and begin to explore objects by banging, rolling, etc., in the hand, rather than only by putting these objects in the mouth. Thus, objects may not end up in the mouth as often. Another reason is that between 8 and 10 months, children begin to eat finger foods which they feed themselves, rather than to be fed liquid foods. With this experience, children begin to be able to distinguish when objects are processed enough by the mouth to be swallowed. The gag reflex also begins to develop at this time, in which case objects, which are improperly processed, are expelled out of the throat. With these skills, children are beginning to be able to prevent improper objects from entering and remaining in the throat.

However, since children have not completely mastered these skills by 8 months of age, a smaller number of choking incidents do continue to occur until about 3 years of age. In addition, these children continue to choke on objects because they have not yet developed the cognitive ability (and probably not the physical capability) to pull the toy out of the mouth and throat once that toy becomes entrapped.

The next issue that was examined was the size of a child's mouth and/or throat. Obviously, objects that are larger than the mouth cannot cause choking. It is unclear, however, whether the largest objects which fit into the mouth are small enough to enter the throat and block the airway. If these objects are too large to enter the throat but remain in the mouth, it is unclear whether they can completely block off the airway. Therefore, when developing regulations to eliminate choking on small parts, rattles, and pacifiers, some experts concentrated on preventing blockage of the throat, while others believed that preventing penetration into the mouth was the way to eliminate choking hazards.

Specifically, when developing the small parts regulation, it was determined that dimensions that would prevent blockage of the throat (1.25 inches) would eliminate choking hazards. Drafters of the rattle regulation believed that if an object was small enough to enter the mouth (1.97 by 1.38 inches), it should not extend to the back of the throat (1.18 inches). The drafters of the pacifier regulation determined that pacifier shields should not be able to enter the mouth (1.68 inch diameter opening with .66 inch extensions on each side). (More detail on these approaches is discussed later).

In addition to differences as to how to prevent choking, there are other reasons for these divergent dimensions from the medical data. First, there are no clear cut anatomical landmarks to measure. Choices include the lips, jaws, cheeks, teeth, back of the mouth, etc. Second, the tissues of the mouth, and especially the throat, are elastic and can stretch to some unknown dimension. Third, an object may not enter the mouth all at once, and so may be even larger than mouth width since it enters on a diagonal. For example, since the cheeks are larger and more elastic than the width of the mouth (jaws), it is possible that children can insert one end of an object into the mouth and cheek, and then insert the other end. In this way, items larger than mouth width can enter the mouth

Fourth, compressible objects larger than the mouth in diameter may be sucked, gummed, bitten, or squeezed by the child down to a size where it can enter the mouth. An extensive search of the literature was performed to determine how much force a child can exert on objects to compress them down in size and no relevant data were found. The pacifier regulation adopted a 2-pound force, based on the maximum force required to extract pacifiers from the mouths of ten adult subjects. A draft Canadian rattle standard, which was also to apply to squeeze toys, proposed using a 2.25 lb load, applied vertically downward, although this was not adopted. Fifth, another reason is the low level of friction that exists between the object and the mouth. Since the mouth is lubricated by saliva, and since most of the objects involved in choking incidents were smooth, a low coefficient of friction would exist.

Another way to determine how large is a child's mouth and/or throat, is to see what size objects have entered the mouth and/or throat and caused choking. As noted earlier, the incident reports indicate that most of the objects, where diameter is known, were less than or equal to 1.65 inches in diameter. Since deaths occurred with products having diameters of 1.57 inches (2 cases), and 1.65 inches (1 case), it appears that the airway can be blocked by objects of these sizes.

To determine why choking occurs on these objects, it is necessary to understand the the anatomy and functions of the swallowing and breathing processes, and what protective reflexes exist, in order to identify why objects can affect the system. Choking occurs because of the overlapping of the food-way and the airway in the pharynx. When swallowing an object, respiration must be interrupted. Usually, this interruption is of short duration, from the time an object enters the pharynx to the time it enters the esophagus. However, if an object remains lodged in the pharynx, breathing is restricted or cut off. The person chokes, which could result in brain damage or death due to inadequate oxygen supply.

Specifically, once an infant places an object in the mouth, the sucking and swallowing process takes over. The muscles of the cheeks, tongue, and roof of the mouth form a chute that decreases as it extends down the throat. The tongue moves the inserted object toward the back of the mouth by pressing upward and backward against the hard palate. The soft palate rises as the object moves toward the back of the mouth and into the pharynx and the epiglottis closes. If an object is too large to enter the esophagus or the larynx/trachea, it is usually caught in the pharynx, and can block off the air passage in three ways. First, no air from the mouth can enter the throat, as the raised tongue blocks off any air passage. Second, air from the nose would be blocked by the raised soft palate. Third, any air already in the upper part of the throat would be blocked from entering the windpipe by the closed epiglottis.

There are several protective reflexes, whose basic function is to clear the air passage so breathing can take place. One is a gag reflex where the object is forced back into the mouth, thereby clearing the air passage. Another reflex is swallowing the object whereby the object moves into the esophagus so that the airway becomes clear. In addition, there is the cough reflex which functions first by bringing air into the lungs so that this extra air can be used more effectively to expel objects out of the airway.

INTERACTION BETWEEN HUMAN AND PRODUCT CHARACTERISTICS

The interaction between human and product characteristics was assessed by comparing the incident reports with the medical literature. In general, objects with diameters of 1.65 inches or less, having smooth surfaces and flared or spherical ends, are choking children. It appears that these sizes and configurations were most often implicated in choking incidents for several reasons.

44

First, objects with diameters of 1.65 inches or less are small enough to be inserted into the mouth. Second, it is speculated that because the objects were smooth, they were more likely than rough objects to be sucked on, since they are comfortable in the mouth. Once in the mouth, this smooth surface easily slides into the throat. Third, these diameters are too large to be ingested into the passageway to the stomach, or inhaled into the passageway to the lungs. Therefore, the object lodges in the pharynx, restricting or completely interrupting respiration. Fourth, if an object is large enough and shaped such that it can lodge in the pharynx, the protective reflexes become ineffective. The gag reflex cannot function, because the throat tissue surrounds the spherical or flared end, prohibiting expulsion of the object. The swallowing reflex cannot be invoked, as the object is too large to enter the esophagus. The cough reflex cannot function, because air first must be taken into the lungs before it can have enough force to expel an object. The object blocks air from coming into the lungs. Since the objects were rounded, they were especially effective in blocking off the airway, since the throat easily molds to their contours, forming a complete seal. Objects that are compressible are even more effective at blocking off the air passage, as they, in turn, can conform to the throat's contours.

REMEDIAL STRATEGIES

Based on the number of choking incidents occurring, it appears that a test device is needed to screen the identified product characteristics which cause choking. Three Federal regulations exist that are intended to address choking hazards: small parts, rattles, and pacifiers. First, each regulation will be discussed, and then the test fixtures specified by the regulations will be compared with the size of objects involved in choking incidents to determine whether they are adequate in screening the identified product characteristics.

1. Small Parts Regulation

16 C.F.R. Section 1500.18(a)(9) classifies as a banned hazardous substance any toy or other article intended for use by children under 3 years of age that presents a choking, aspiration or ingestion hazard. 16 C.F.R. part 1501 provides a test method for determining whether an article presents these hazards. This test method uses a test device which is a truncated cylinder with a 1.25 inch diameter and a depth ranging from 1 to 2.25 inches (Appendix 5a). No article intended for children under 3 years shall be small enough to fit entirely within the cylinder.

The 1.25 inch diameter was based on one of the recommendations by the Accident Prevention Committee of the American Academy of Pediatrics (AAP) that two planes larger than 1.25 inches and the third plane any size would prevent acute tracheal obstruction and sudden death. They stated that "any item having a 1-1/4 inch minimum width is not likely to slip beyond the hypopharynx and suddenly and completely obstruct the airway." The 2.25 inch depth evolved from one of the Toy Manufacturers of America's (TMA) recommendations that a long narrow cylinder with a 2.25 inch length would eliminate long slender objects that may cause choking. This was based on the size of sewing needles on which children had choked. The Bureau of Product Safety, Food and Drug Administration, the predecessor to CPSC, in trying to combine the two approaches, developed the truncated cylinder.

2. Rattle Regulation

16 C.F.R. Section 1500.18(a)(15) bans rattles which do not meet the requirements set out in Part 1510. The requirements in 16 C.F.R. Part 1510, which were adapted from Canada's rattle regulation, prohibit rattles that can be inserted into an opening measuring 1.97 inches by 1.38 inches and can penetrate to the full depth of the cavity - a depth of 1.18 inches (See Appendix 5b). This is intended to eliminate rattles that are small enough to enter the mouth and extend back to the throat.

The width (side-to-side) measurement of 1.97 inches was based on the size of objects involved in choking incidents, and on documented information on lower and upper jaw widths. The height (top-to-bottom) dimension of 1.38 inches was based on the size of objects which became lodged in an infant's throat. The depth (front-to-back) measurement of 1.18 inches was taken from the anterior-posterior dimension of the mouth cavity.

3. Pacifier Regulation

16 C.F.R. Section 1500.18(a)(8) bans any pacifier that does not meet the requirements of 16 C.F.R. Part 1511. One of the requirements in Part 1511 is a pacifier test fixture consisting of a 1/4 inch thick polytetrafluoroethylene template which has a circular opening measuring 1.68 inches in diameter with additional "bow-tie" shaped openings extending .66 of an inch on each side (Appendix 5c). Any pacifier which can be completely drawn through the opening by a force of 2 lbs or less shall fail the test. The test is intended to assure that pacifier guards or shields are large enough and stiff enough to prevent the pacifier from completely entering a child's mouth and causing choking.

The measurement of the opening is intended to simulate the size of a baby's mouth and is based on sample measurements of children's mouths taken by the Maryland State Department of Health and Mental Hygiene. The "bow-tie" shape of the test fixture, which was taken from Canada's pacifier regulation, was intended to preclude shields that are much larger in width than height. The 2.0 pound force was established from tests conducted by the CPSC Engineering Laboratory and was the maximum force required to extract pacifiers from the mouths of ten adult subjects who were asked to suck on them.

Comparison of Product Sizes to Regulation Test Fixtures

Since it has been identified that product diameter determines whether an object is capable of penetrating into a child's mouth, the diameters of the objects involved in choking incidents were compared to the cavities of the Federal regulation test fixtures. There were 136 incidents, including 18 fatalities, where the diameter of the object was specified.

While all of the objects discussed in this paper are larger than the small parts test fixture in either diameter or depth, there were 49 objects, including 10 fatalities, involving incidents that were smaller in diameter than the cavity of the small parts test fixture. Since almost two-thirds of the objects involved in choking incidents studied in this report were larger than the diameter of the small parts test fixture, it appears that the 1.25 inch dimension of the small parts tester is not adequate to prevent penetration of an object into the mouth.

There were 72 incidents, including 5 deaths, on objects larger in diameter than the rattle test fixture and smaller than the pacifier test fixture. Since most of the objects

had nearly equal heights and widths, the height dimension of the rattle fixture would determine whether an object was smaller or larger than the cavity. Thus, it appears that the 1.38 inch dimension of the rattle test fixture is also not large enough to prevent objects from penetrating into the mouth.

In addition, there were 3 incidents on objects larger than the opening of the pacifier template, none resulting in death. In one case, the object was very compressible. In the other two cases, the objects were much larger in width than height. In all three cases, the victims were between 19 months and 2 years of age. (Appendix 6). Thus, it appears that the opening of the pacifier test fixture - 1.68 inch circular opening with .66 of an inch extensions on each side - would be effective in preventing nearly all of the objects involved in incidents from penetrating into the mouth and causing choking.

Proposals for a Generic Test Fixture

While all the regulations have been effective in eliminating many hazardous products from the marketplace, choking incidents are still occurring. Since the characteristics that lead to choking are not product specific, it appears that a generic test fixture is needed to screen all products intended for children under the age of three.

Japan came to a similar conclusion when they became aware of the problem of choking incidents occurring on objects larger than the U.S. rattle fixture. In the past, Japan used provisions identical to the U.S. rattle standard to screen toys intended for use by children less than 18 months of age, such as rattles, pacifiers, and teethers. When they learned of three deaths on toy microphones, which had diameters larger than the rattle fixture (two had 1.57 inch diameters and one had a 1.65 inch diameter), they proposed an additional requirement. Amendments were drafted which state that, in addition to the rattle fixture requirements, a fixture having a circular opening with a 1.77 inch diameter would be used to screen spherical portions of toys. There were two bases for the diameter chosen. The first is the death caused by a toy with a 1.65 inch diameter. The second is their reasoning that the oval shape of the current rattle regulation could be transformed to a circular shape having the same circumference. The diameter of such a circular opening would be about 1.77 inches.

Two proposals for a generic test fixture were developed by the Division of Human Factors to screen all children's products intended for users under the age of three. Such a test device is intrinsically appealing, as only one test device, instead of three, would exist to identify articles with choking potential.

The purpose of the first proposal is to eliminate all children's products from the marketplace which are small enough in diameter to penetrate into the mouth, yet large enough in depth to extend to the back of the throat. Based on the human and product characteristics identified, the test device would have the following parameters: This test device would have an opening identical in size and shape to the pacifier test fixture opening, (1.68 inch diameter with .66 of an inch extensions on each side), except for depth. The appropriateness of this opening is based on the fact that this test fixture would eliminate all of the objects involved in fatalities and all but three of the objects involved in non-fatal choking incidents. The depth would be 1.18 inches, based on the rattle fixture depth. This depth would be appropriate for identifying objects which could extend to the back of the throat. Dimensions greater than this would be inappropriate for pacifier nipples as well as any other object. This is supported by a provision in the British Standard for pacifiers which states that length of a pacifier nipple shall not exceed 1.18 inches. There would be a force exerted downward on an object placed in any orientation on the fixture. The amount of force would be greater than the 2 lbs currently used in the pacifier regulation. The exact amount would have to be determined after further information is received from the medical community. Included in the consideration of force could be the selection of the test device material based on coefficients of friction, and the simulation of saliva. (Appendix 7a)

The purpose of the second proposal is to eliminate only articles that could cause blockage rather than all articles that could penetrate into the mouth. This distinction is difficult to determine. A difference was identified between the shape of most articles that have caused choking, where the width and height are nearly equal, and the shape of the mouth (and hence the shape of the test fixture in the first proposal), where the width is somewhat larger than the height. One hypothesis is that while objects with widths larger than the height of the mouth can penetrate the mouth, only objects with two dimensions equal to or less than the height of the mouth can block the airway. In that case, the test fixture should have a circular opening with a diameter equal to the height of the mouth (1.68 inches). This test device would eliminate all of the objects involved in fatalities, and all but five of the objects involved in non-fatal choking incidents. (Appendix 7b)

The disadvantage of these proposals is that they would require the substantial redesign of many toys, such as small dolls, that are currently on the market. However, these toys have been involved in choking incidents. In addition, in the first proposal, the object involved in 2 of the 195 choking incidents would not be eliminated. Both incidents involved a hammer measuring 3.50 inches in width, which is larger than the width of the cavity in the first test fixture. (The third object which was larger than the cavity in the test fixture, was a pacifier with a flexible shield. Since this pacifier meets the current pacifier regulation force test, before boiling, an increase in proposed force over that specified in the current pacifier regulation would eliminate this product). In the second proposal, one additional object involved in an incident would not be eliminated. This is a pre-standard rattle measuring 2.50 inches in width, which is larger than the cavity of the second test fixture. (The other is a compressible teether which would be eliminated by the force test).

In conclusion, there appears to be a need for a generic test fixture to screen all products intended for children under three years that could cause choking. Two possible designs have been discussed in this paper as a starting point. We recommend that the medical community be consulted for their professional judgment, before a final design is selected.

BIBLIOGRAPHY

American Medical Association. The Wonderful Human Machine. Chicago: American Medical Association, 1977, pp. 35-37.

The Bendix Report, Study to Determine the Size of Toy/Toy Parts Which Caused Suffocation, Contract No. CPSC-C-76-0123, Final Report, September 29, 1977.

Brazelton, T. Berry. A study published by "Baby Talk," as referenced in The Complete Baby Book, by the Editors of Consumer Guide. New York: Simon and Schuster, 1979, p. 80.

British Standards Institution, Specification for Babies' Dummies, BS5239:1975, UDC 615.477.84, pg. 3.

Caplan, Frank. The First Twelve Months of Life. Princeton: Edcom Systems, Inc., 1971, Bantam Book edition.

Code of Federal Regulations (CFR), Commercial Practices, 16 - Chapter II - Consumer Product Safety Commission. Office of the Federal Register, National Archives and Record Service, General Services Administration, 1983, Parts 1500, 1501, 1510, 1511.

Gellman, Vera, M.D., Canadian Consumer Standards Directorate. Letter to Aaron Locker, October 4, 1976.

Gellman, Vera, M.D., Canadian Consumer Standards Directorate. Letter to John Preston, U.S. Consumer Product Safety Commission, November 25, 1976.

Holroyd, H. James, M.D., Chairman: Accident Prevention Committee of the American Academy of Pediatrics. Letter to Dale Miller, January 25, 1971.

Information generated from the American Academy of Pediatrics Task Force on Foods and Choking in Children, August 5-6, 1983:
- Lectures by James F. Bosma, M.D., H. James Holroyd, M.D., and David J. Kenny, D.D.S., Ph.D.
- Handouts by James F. Bosma, M.D.,:
"Regarding: Patterns of Feeding in Developmental Perceptive."
"Regarding: Mechanisms of Liability to Choking on Food in Infants and Young Children - During Age of Transition Feeding."

The Japan Toy Association, Additional Requirement for Rattles, etc., March 1980.

Johnson and Johnson. The First Wondrous Year. New York: Macmillan Publishing Company, Inc., 1979, P. 360.

Mitchell, Patricia Picone. "When to Begin Baby on Strained Foods," The Washington Post, March 23, 1983, p. E7.

VanHouten, Donald T. "Human Factors Analysis of Ingestion, Aspiration and Choking Injuries." Division of Human Factors, Directorate of Hazard Identification and Analysis - Epidemiology, U.S. Consumer Product Safety Commission, June 5, 1978.

White, Burton L. The First Three Years of Life. Englewood Cliffs: Prentice-Hall, Inc., 1975, Avon Books edition, pp. 20 and 55.

Appendix 1

PRELIMINARY EVALUATION OF CHOKING POTENTIALS WITH SQUEEZE TOYS

RESTRICTION REMOVED-...
for public release.
Initial RESTRICTED Date

APPENDIX 1

UNITED STATES GOVERNMENT

Memorandum

U.S. CONSUMER PRODUCT SAFETY COMMISSION
WASHINGTON, D.C. 20207

TO : David Schmeltzer, AED, CA
THROUGH: Nick Marchica, EX-P

DATE: August 19, 1982

FROM : Shelley Waters Halupka, EPHF SWH

SUBJECT: PSA Request, Criteria for Evaluating Which Squeeze Toys Present Choking/Suffocation Potentials 1/

This is in response to your request for our evaluation of which squeeze toys present similar choking or suffocation potentials to those infant toys involved in incidents.

Introduction

We recently became aware of four infant deaths which occurred when squeeze toys became lodged in children's throats. The squeeze toys were shaped like baseball bats or animals on handles. They were designed to be hand-held and were similar in size and configuration to rattles which had been involved in choking and suffocation incidents.

The Commission has found that hand-held rattles of specified dimensions could enter the mouth and become lodged in the throats of infants, and thus presented an unreasonable risk of injury from choking or suffocation. These rattles were banned under the Federal Hazardous Substances Act (43 F.R. 22002, 22005, May 23, 1978).

However, since squeeze toys are not covered by the requirements for rattles, criteria need to be established to evaluate which squeeze toys present choking and suffocation potentials. This potential for a particular squeeze toy is dependent on the characteristics of the infant's mouth and throat, and on the similarity of the toy in size and configuration to infant toys involved in choking and suffocation incidents.

Characteristics of the Mouth and Throat

An object becomes lodged in the throat as a result of infant behavior and the swallowing process. The behavioral patterns originate from reflexes invoked by the nourishment survival instinct. According to Caplan, these behavioral patterns are sequential actions consisting of: 1) the rooting reflex (turns toward an object touching the cheek or mouth), 2) the hand to mouth reflex (brings a hand to the open mouth), 3) the sucking reflex (moves an object into the mouth and towards the back of the throat), and 4) the swallowing reflex (moves an object down into the throat). Starting with the second month, an infant sucks for pleasure and learning, in addition to trying to acquire nourishment.

1/ These criteria were originally developed with regard to a particular set of squeeze toys and were first set down in the EPHF memorandum dated June 9, 1982 (from Shelley Waters Halupka to Elizabeth Haught).

The mouth is also used for exploration, since it is one of the infant's main channels of perception at this time. According to Brazelton, sucking, for reasons other than nourishment, peaks during the 3 to 7-month age period. Therefore, by the time children reach 4 to 9 months of age, the ages when most of the choking or suffocation incidents with infant toys have occurred, the pattern of putting things into the mouth, sucking, and swallowing, is well established. In addition, children of this age range generally do not have the cognitive ability (and probably not the physical capability) to pull the toy out of the mouth and throat if that toy should become entrapped.

Once an infant places an object in the mouth, the sucking and swallowing process takes over. The muscles of the cheeks, tongue, and roof of the mouth, form a chute that decreases as it extends down the throat. The tongue moves the inserted object toward the back of the mouth by pressing upward and backward against the hard palate. The soft palate raises as the object moves toward the back of the mouth and into the pharnyx. When the object reaches the pharnyx, the epiglottis closes. If an item is too large to be ingested or inhaled, it is usually caught in the throat at this point, and can block off the air passage in three ways. First, no air from the mouth can enter the throat as the raised tongue blocks off any air passageway. Second, air from the nose would be blocked by the raised soft palate. Third, any air already in the upper part of the throat would be blocked from entering the windpipe by the closed epiglottis. A child can suffocate, if the offending object is not removed quickly.

Size and Configuration of Infant Toys Involved in Choking/Suffocation Incidents

Infant toys known to be associated with choking or suffocation incidents include rattles in the shape of telephone receivers, diaper pins, barbells and clothespins, and squeeze toys in the shape of baseball bats and animals on a handle. Many of the infant toys involved in these incidents are of similar size and configuration.

Generally, the size of the toys associated with incidents ranges from about 1 to 1-1/4 inches in diameter at the end, and about 3 to 5 inches in potential penetration depth. These toys became lodged in the throat because they were large enough to preclude ingestion and inhalation, yet small enough to enter the mouth and extend back to the throat.

To prevent incidents like these from occurring, a baseline size needs to be established which would identify toys which could enter the mouth and extend back into the throat. This concept was previously examined in the development of the Federal Hazardous Substances Act (FHSA) Regulation on Baby Rattles, 16 CFR 1510.

During the development of the rattle standard, research was done to establish a baseline size. Information was gathered on the dimensions and characteristics of the mouth and throat from clinical observations of professionals engaged in pediatrics and allied specialities, and from

dimensional data on the oral pharyngeal cavity in infants documented in the scientific literature. This information was combined with the dimensions of rattles known to have been involved in incidents to determine which rattles presented suffocation hazards.

The conclusion of this work, which became the basis for the rattle standard, was that objects measuring less than 2.0 inches by 1.4 inches, which have the potential for penetrating greater than 1.2 inches, may present a suffocation hazard. (See Attachment). The width (side to side) measurement of 2.0 inches was based on the size of objects impacted in a child's throat, and on documented information on lower and upper jaw widths. The height (top to bottom) dimension of 1.4 inches was based on the size of objects which became lodged in an infant's throat. The depth (front to back) measurement of 1.2 inches was taken from the anterior - posterior dimension of the mouth cavity. As far as we know, this is still the best data that exists to date.

When evaluating squeeze toys for size, compressibility must also be taken into consideration. Unlike rattles, squeeze toys larger in width and height than the baseline size can be compressed below those dimensions. When this happens, it is possible that the squeeze toy can conform to the throat's contours, completely blocking off the air passage. This is a difficult parameter to evaluate, since squeeze toys vary in their degree of compressibility, and since this parameter is not easily quantifiable. For the sake of this analysis, if a squeeze toy could be compressed below the baseline size, under slight force, we consider it as having more suffocation potential than those toys that cannot be easily compressed below that size. We also conclude that a squeeze toy which can be compressed below the baseline size under slight force has at least the same suffocation potential as a rigid toy that is below the baseline size.

In addition to size, configuration should be considered when evaluating the likelihood of suffocation with individual squeeze toys. Like most of the rattle incidents, all the squeeze toy incidents, to date, exhibited a smooth cylindrical shaped middle section with a flared end. We believe infant toys with this configuration were most often involved in incidents for several reasons. First, a child may prefer to suck on this toy over another toy, since the smooth elongated surface is very comfortable in the mouth. Once in the mouth, this surface easily slides into the throat. Then, as the flared end begins to be swallowed, it is trapped between the raised tongue and the soft palate. The shape of the flared end is ideal for completely blocking off the throat. In addition, once in the throat, a flared end would be more difficult to remove than a tapered end, because the tissue surrounds the flared end and because the object forms an excellent seal for a vacuum.

Another property of squeeze toys affecting likelihood of suffocation is flexibility. Unlike rattles, the flexibility of squeeze toys makes them more likely to penetrate farther into the throat. Because the throat angles down from the mouth, a rigid rattle may have trouble maneuvering through the bend and may become caught before the end is completely lodged in the throat. A squeeze toy, on the other hand, because it is flexible, may be able to maneuver down the bend and may not stop until the tip could go no farther, completely sealing the air passage.

Criteria for Evaluation of Squeeze Toys

Based on the characteristics of the mouth and throat and on the size and configuration of infant toys which have been involved in incidents, evaluation criteria were established. We think that squeeze toys that meet these criteria may present the potential for suffocation:

Size:

- Within the baseline size (Any part of the product less than 2.0 inches x 1.4 inches which has a penetration depth greater than 1.2 inches). In determining size, compressibility must be considered.

Configuration:

- Smooth cylindrical shaped middle section
- Flared end
- Flexibility

Attachments

bcc: R. Verhalen
N. Marchica
C. Nelson
T. Rogers
J. Bradley
T. Van Houten
S. Halupka (2)
L. Lichtenstein

EPHF:SHalupka:alk:8/19/82

Attachment

Baseline Size

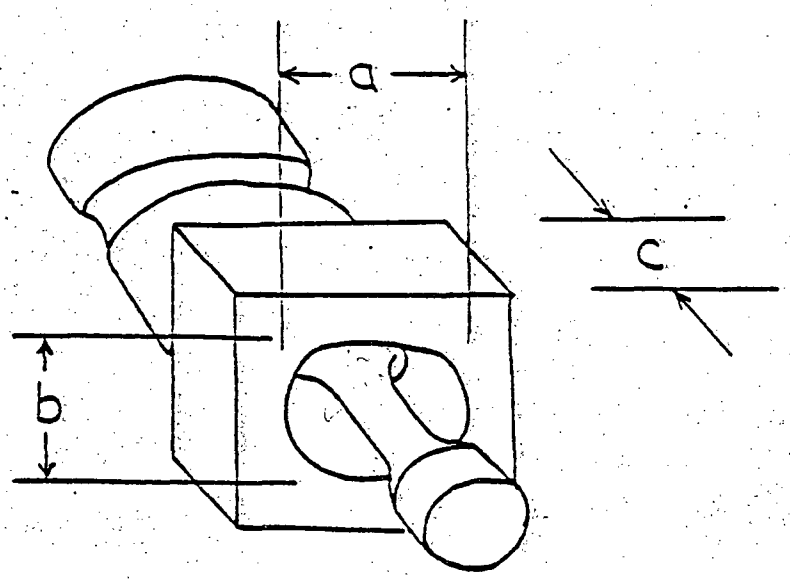

a = width = 2.0 inches

b = height = 1.4 inches

c = depth = 1.2 inches

BIBLIOGRAPHY

American Medical Association. The Wonderful Human Machine. Chicago: American Medical Association, 1977, pp. 35-37.

Brazelton, T. Berry. A study published by "Baby Talk", as referenced in The Complete Baby Book, by the Editors of Consumer Guide. New York: Simon and Schuster, 1979, p. 80.

Brobeck, John R. Best and Taylor's Physiological Basis of Medical Practice. Baltimore: The Williams and Wilkins Company, 1973, Chapter 2, pp. 95-98.

Caplan, Frank. The First Twelve Months of Life. Princeton: Edcom Systems Inc., 1971, Bantam Book edition pp. 9-10 and 52-53.

Gellman, Vera, Canadian Consumer Standards Directorate. Letter to John Preston, U.S. Consumer Product Safety Commission, November 25, 1976.

Gellman, Vera, Canadian Consumer Standards Directorate. Letter to Aaron Locker, October 4, 1976.

Appendix 2

DISCUSSION OF CHOKING INCIDENTS BY PRODUCT TYPE

Appendix 2

Discussion of Choking Incidents by Product Type

Following is a discussion of the choking incidents by each type of product that was evaluated for human/product interaction in this Report.

a. Squeeze Toys

We are aware of 9 squeeze toy incidents, 4 of them fatal. At least 7 of these squeeze toys had handles which flared out at the ends (3 baseball bats, 4 animal heads on handles), and the 4 deaths involved squeeze toys of this shape. The children in all of these cases ranged in age from 3 to 9 months. Of the 9 victims, 5 were unsupervised, such as when the child was in a crib, and all 4 deaths occurred in this group. It appears that if parents are nearby, they can remove the squeeze toy before injury or death occurs. All of these toys were larger than the small parts fixture, but smaller than the rattle and the pacifier fixtures. All of the squeeze toys were compressible. Two of these incidents involved squeeze toys which have subsequently been recalled, and a third squeeze toy was the subject of a CPSC unilateral press release informing consumers to discontinue using the product.

b. Rattles

We are aware of 97 rattle incidents, 14 of them fatal. These children ranged in age between 3 and 12 months, with over two-thirds between 4 and 8 months (including 11 of the deaths). Almost all of the rattles had a flared or spherical end, such as a telephone receiver, barbell, or knob on the end of a handle, which became lodged in the child's mouth and/or throat.

Of the 97 incidents, it appears that 36 were with pre-standard rattles, all but one smaller than the rattle fixture, and all of the deaths were in this group. The rattle fixture is intended to eliminate rattles of this size from the marketplace.

Of the 61 incidents with rattles larger than the rattle fixture, 49 were with one model of rattle produced by the same manufacturer, which had a 1.5 inch diameter knob on the handle. This rattle has been redesigned by replacing the knob with a "D" shaped end. In addition, 5 of the rattles, which were shaped like telephone receivers with a 1.4-inch diameter flared end, were made by one manufacturer.

c. Pacifiers

We are aware of 9 pacifier incidents (3 deaths) where the entire pacifier lodged in the child's mouth/throat. At least 7 of the infants were under 6 months of age. Six incidents, including the 3 deaths, appeared have involved pre-standard pacifiers. Three of these incidents were with pacifiers with a shield approximately 1.5 inches in diameter. Of the three post-standard incidents, at least two had compressible or flexible shields. One of the post-standard incidents occurred with a new pacifier having a flexible shield measuring 1.87 inches. When tested, before being subject to boiling, the pacifier passed the test requirements; that is, the pacifier could not be drawn through the opening with a 2-pound force.

d. Other Toys

In the other toy category were grouped 80 choking incidents (including 16 deaths) involving children's products which were not squeeze toys, rattles, or pacifiers. These products were grouped by the type of product, and hence the intended age group and use. These groupings include teethers, crib gyms, push toys, stacking toys, toy instruments, small dolls, toy microphones, and miscellaneous.

1. Teethers

Although the distinctions are not always clear, there were 11 incidents (2 of them deaths) with teethers which were not rattles or pacifiers. These children ranged in age between 5 and 11 months. Not much information is known about the shape and size of these products. For this discussion, we have included a pacifier having several nipples, which did not have the traditional pacifier shape and did have some of the characteristics of a teether. In two incidents, children lodged in their mouths the knob on the end of a jack-shaped teether (as in jacks and balls) made by the same manufacturer. Two were keys on a ring made by one manufacturer.

2. Crib Gyms

We are aware of 6 incidents (no deaths) where children choked on crib gyms. Where age is known, these children were between 5 and 7 months. The shape of all parts that lodged in the mouth was spherical - in two instances the ball came off the product, and in 4 instances the ball remained attached to the chinning bar or cord. The diameter of these spherical parts ranged between 1 and 1.5 inches. Three of the crib gyms were the same model made by one manufacturer.

3. Push Toys

We are aware of 4 incidents (no deaths) of choking on a push toy made by one manufacturer. A 1.5 inch diameter knob on the end of the handle became lodged in the child's mouth. Since all of these incidents are consumer complaints made to the manufacturer, we have very little information on the ages of the victims and on the details of how the incidents occurred, with one exception. In this one case, an 11-1/2 month old child was found "apparently unconscious and barely breathing" by his mother, with the handle (knob and stick) in his mouth. When the mother could not remove the handle from the child's mouth/throat, the child was taken to the pediatrician who removed the toy and gave the child mouth-to-mouth resuscitation on the way to the hospital. The child stayed three days in the hospital since he was experiencing convulsions. It is unknown if any permanent injury, such as brain damage, resulted from the incident. This toy has subsequently been redesigned by replacing the knob with a larger "D" shaped end.

4. Stacking Toys

In this grouping were placed toys such as blocks, nesting eggs, kegs, donuts, and stacking caps. We are aware of 6 incidents with these types of toys, none of them deaths. The children ranged in age between 7 months and 2 years. This wide age range is probably due to the difference in complexity of the various stacking toys. For example, a toy with various size donut shapes that are stacked on a cylinder is intended for a younger age group than small blocks which can be used to build many different objects. At least 4 of these toys were somewhat cylindrical in shape, and included a cylinder-shaped block, the cylinder on which the donut shapes are stacked, a keg, and an egg.

5. Toy Instruments

The toy instrument group includes both toy musical and work instruments since it was believed that they were similar in intended use. For example, a mallet for a xylophone and a hammer for pegs are used in similar ways. There were 8 incidents of choking on toys in this group, 2 of them deaths. These toys included 2 balls from a drum set made by 1 manufacturer, 2 pegs from a hammer and peg set, 2 hammer heads made by 1 manufacturer, 1 mallet from a xylophone, and 1 plastic tool. The deaths were on the latter two toys. The children ranged in age between 11 months and 2 years. The shapes of these objects were also generally rounded - 2 spheres, 1 sphere on a handle, and 2 flares on handle ends.

6. Small Dolls

The small doll group includes rigid figures which are usually less than 2 inches in depth. We are aware of 32 incidents involving small dolls, including 3 deaths and one severe brain damage. Thirty of these incidents, including the deaths and brain damage, occurred with one manufacturer's product. The children ranged in age between 6 months and 3 years, although most of the incidents occurred to children one year of age or older. Most of these toys were rounded in shape - a spherical head on a cylindrical shaped body. The head of the doll seems to enter the mouth first. These toys usually were about 1 inch in diameter and 1.9 inches in length. These toys are just slightly larger than the small parts cylinder in depth, which makes them especially dangerous since in several cases the toys were not long enough for the parent to grasp them, preventing quick removal. In 23 of the incidents, our information comes from the manufacturer's summary of consumer complaints, and therefore not much information is known.

7. Toy Microphones

There were 3 toy microphone choking incidents which occurred in Japan. All of these cases involved children 16 months of age, and all resulted in death. Two of these toys measured 1.57 inches in diameter, and one had a 1.65 inch diameter. All had spherical ends on handles. In every case, the children were holding the toys near their mouths, and fell to the ground, lodging the spherical ends in their throats.

8. Miscellaneous

There were 10 toys grouped in this category - 2 bubble pipes, a toy baseball bat, a doll from a car, a toy pumpkin, a wheel and axle, a toy garbage can, a compressible finger toy, a toy dog, and a cartoon character doll. Six of these incidents resulted in death. All but two of the objects were rounded in shape - one was spherical, one was a sphere on a handle, four were flared ends on handles, and two were cylindrical.

Appendix 3

PRODUCT CHARACTERISTIC TABLES

a. Size of Products Involved in Choking Incidents

b. Configuration of Products Involved in Choking Incidents

Appendix 3a

SIZE OF PRODUCTS INVOLVED IN CHOKING INCIDENTS

Types of Products by Diameter

		Diameter (Inches)*								
Product	Total	<1.00	1.00 to 1.19	1.20 to 1.29	1.30 to 1.39	1.40 to 1.49	1.50 to 1.59	1.60 to 1.69	>1.69	Unknown
TOTAL	195	5	44	9	3	6	60	4	5	59
Squeeze Toys	9	2	4	-	-	-	-	-	-	3
Rattles										
Pre-standard	36	-	5	6	-	-	-	-	1	24
Post-standard	61	-	-	-	-	5	51	1	-	4
Pacifiers	9	-	-	-	-	1	2	-	1	5
OTHER TOYS										
Teethers	11	-	-	-	1	-	-	-	1	9
Crib Gyms	6	-	3	1	-	-	1	-	-	1
Push Toys	4	-	-	-	-	-	4	-	-	-
Stacking Toys	6	1	-	-	1	-	-	-	-	4
Toy Instruments	8	-	2	1	-	-	-	2	2	1
Small Dolls	32	1	30	-	-	-	-	-	-	1
Toy Microphones	3	-	-	-	-	-	2	1	-	-
Miscellaneous	10	1	-	1	1	-	-	-	-	7

*Note: Product dimensions are discussed in terms of the orientation with which the product would enter the mouth. The dimensions of the mouth that would determine whether a product could enter the mouth are width (side to side) and height (top to bottom). Since in many products the width and height are equal, the term "diameter" is used. When the product is not exactly round, diameter quoted is largest dimension of width or height.

Source: U.S. Consumer Product Safety Commission
Directorate for Epidemiology/EPHF

Appendix 3b

CONFIGURATION OF PRODUCTS INVOLVED IN CHOKING INCIDENTS

Types of Products by Configuration

Product	Total	Configuration					
		Spheres	Spherical Ends	Flared Ends	Cylinders	Other	Unknown
TOTAL	195	5	107	32	8	25	18
Squeeze Toys	9	-	1	6	-	2	-
Rattles							
Pre-standard	36	-	7	16	1	4	8
Post-standard	61	-	52	5	-	4	-
Pacifiers	9	-	-	-	-	4	5
OTHER TOYS							
Teethers	11	-	2	1	-	5	3
Crib Gyms	6	2	4	-	-	-	-
Push Toys	4	-	4	-	-	-	-
Stacking Toys	6	-	-	-	4	1	1
Toy Instruments	8	2	1	2	-	2	1
Small Dolls	32	-	30	-	1	1	-
Toy Microphones	3	-	3	-	-	-	-
Miscellaneous	10	1	3	2	2	2	-

Source: U.S. Consumer Product Safety Commission
Directorate for Epidemiology/EPHF

Appendix 4

HUMAN CHARACTERISTIC TABLE

Age of Victims Involved in Choking Incidents

Appendix 4

AGE OF VICTIMS INVOLVED IN CHOKING INCIDENTS

Types of Products by Age of Victims

		AGE													
		Months									Years				
Product	Total	<3	4	5	6	7	8	9	10	11	1	2	3	4	Unknown
		Infant Toys													
TOTAL	195	9	13	21	33	17	11	6	7	7	27	13	4	1	26
Squeeze Toys	9	1	1	1	2	3	-	1	-	-	-	-	-	-	-
Rattles															
Pre-standard	36	3	2	3	8	3	5	1	3	2	3	-	-	-	3
Post-standard	61	1	6	12	17	9	2	3	-	-	1	-	-	-	10
Pacifiers	9	3	2	2	-	-	-	-	-	-	1	-	-	-	1
OTHER TOYS															
Teethers	11	-	-	1	4	-	2	-	1	1	-	-	-	-	2
Crib Gyms	6	-	2	1	-	1	-	-	-	-	-	-	-	-	2
		Toddler Toys													
Push Toys	4	-	-	-	-	-	-	-	-	1	-	-	1	-	2
Stacking Toys	6	-	-	-	-	-	1	1	1	-	1	2	-	-	-
Toy Instruments	8	-	-	-	-	-	-	-	-	2	5	1	-	-	-
Small Dolls	32	-	-	-	1	1	-	-	1	-	11	9	3	-	6
Toy Microphones	3	-	-	-	-	-	-	-	-	-	3	-	-	-	-
Miscellaneous	10	1	-	1	1	-	1	-	1	1	2	1	-	1	-

Source: U.S. Consumer Product Safety Commission
Directorate for Epidemiology/EPHF

Appendix 5

FEDERAL REGULATION TEST FIXTURES

a. Small Part Test Fixture

b. Rattle Test Fixture

c. Pacifier Test Fixture

Appendix 5a

SMALL PART TEST FIXTURE

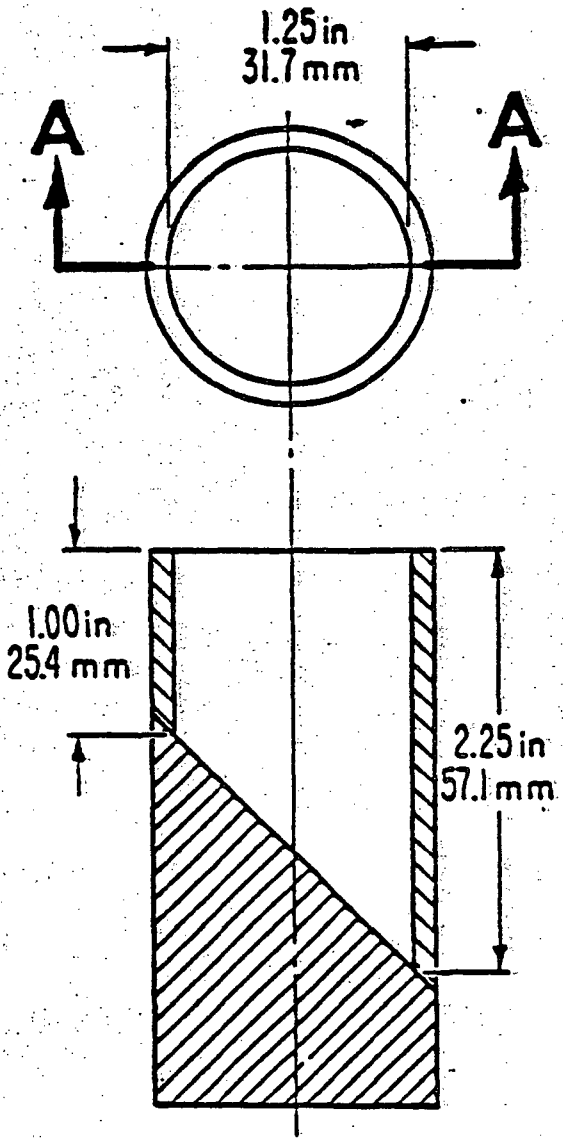

Section A-A

Source: 16 C.F.R. Part 1501
Method for Identifying Toys and Other Articles
Intended for Use by Children Under 3 Years of Age
Which Presents Choking, Aspiration or Ingestion Hazards
Because of Small Parts

Appendix 5b

RATTLE TEST FIXTURE

CAVITY CENTERED WITHIN FIXTURE

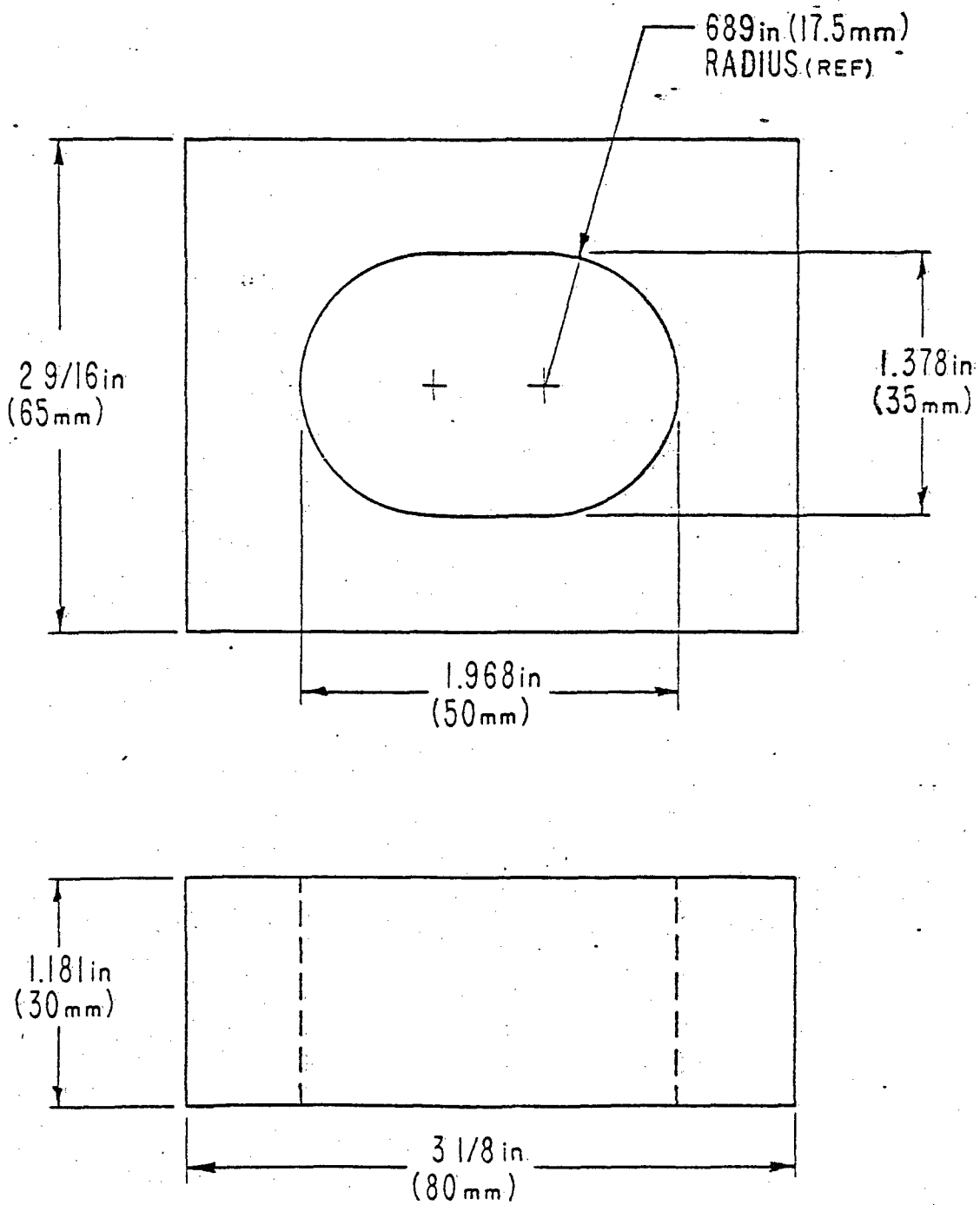

Source: 16 C.F.R. Part 1510
Requirements for Rattles

Appendix 5c

PACIFIER TEST FIXTURE

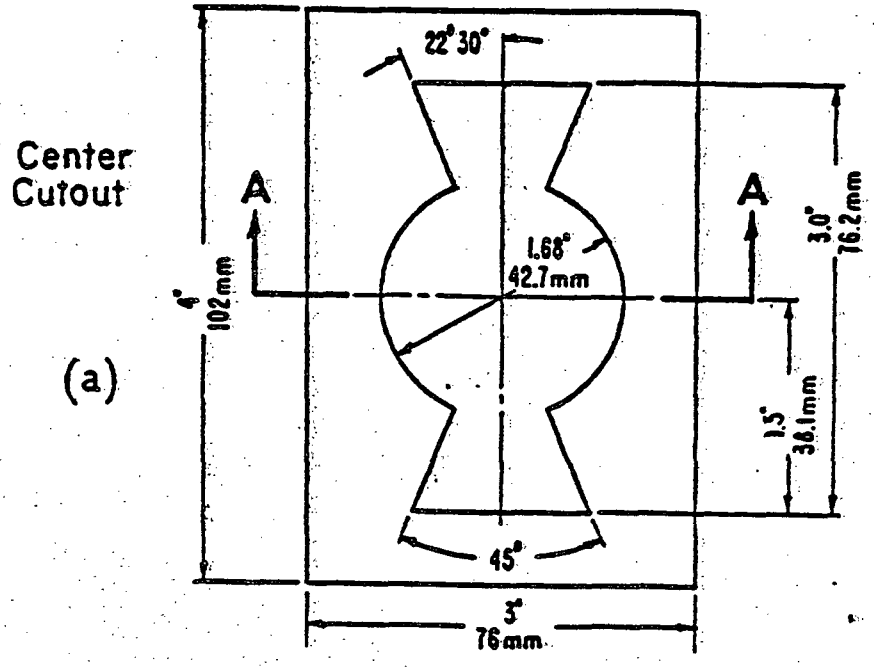

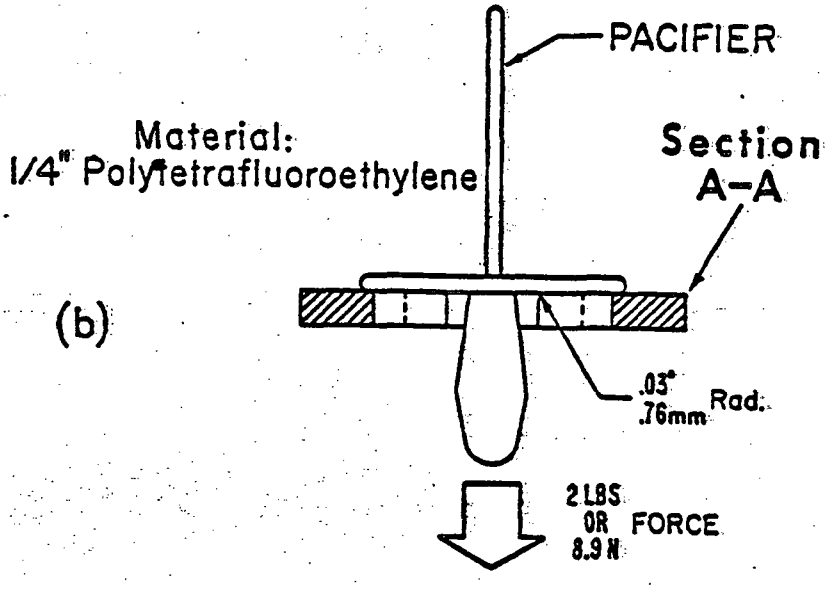

Source: 16 C.F.R. Part 1511
Requirements for Pacifiers

Appendix 6

COMPARISON OF PRODUCT SIZES TO FEDERAL REGULATION TEST FIXTURES

Appendix 6

SIZE OF PRODUCTS INVOLVED IN CHOKING INCIDENTS

Number of Fatalities and Non-Fatalities by Product Diameters
(In Comparison to Regulation Test Fixtures)

		Product Diameters *				
	Total	Smaller than Small Part Test Fixture	Larger than Small Part Test Fixture – Smaller than Rattle Test Fixture	Larger than Rattle Test Fixture – Smaller than Pacifier Test Fixture	Larger than Pacifier Test Fixture	Unkown
TOTAL	195	49	12	72	3	59
Fatalities	37	10	3	5	-	19
Non-Fatalities	158	39	9	67	3	40

*Note: If diameter was exactly size of test fixture (i.e., 1.25 = small parts test cylinder), it was assumed that object was larger than fixture.

Source: U.S. Consumer Product Safety Commission
Directorate for Epidemiology/EPHF

Appendix 7

REMEDIAL STRATEGIES - GENERIC TEST FIXTURES

a. Proposal One

b. Proposal Two

Appendix 7a

PROPOSAL ONE FOR A GENERIC TEXT FIXTURE

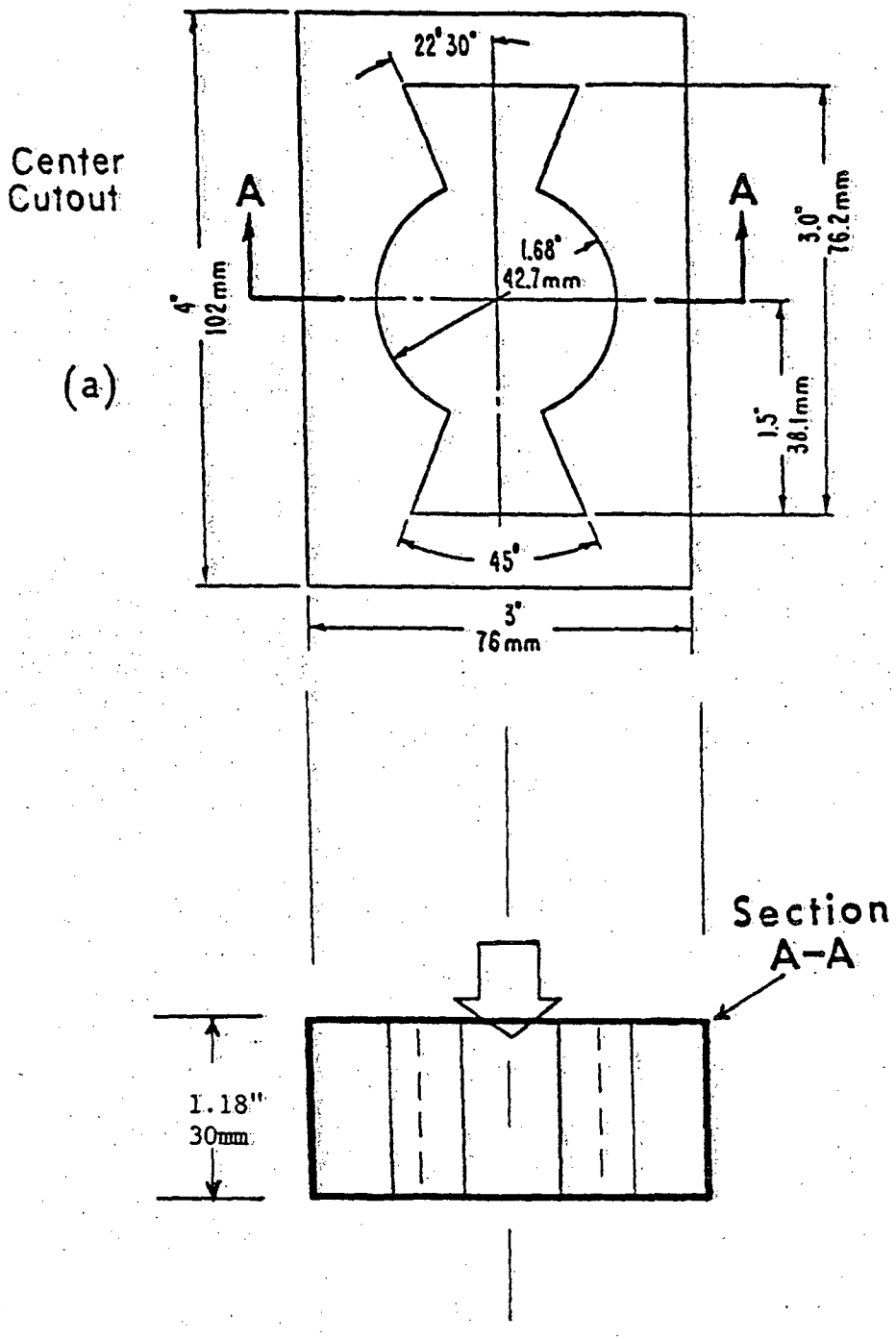

Material:

Force

Appendix 7b

PROPOSAL TWO FOR A GENERIC TEST FIXTURE

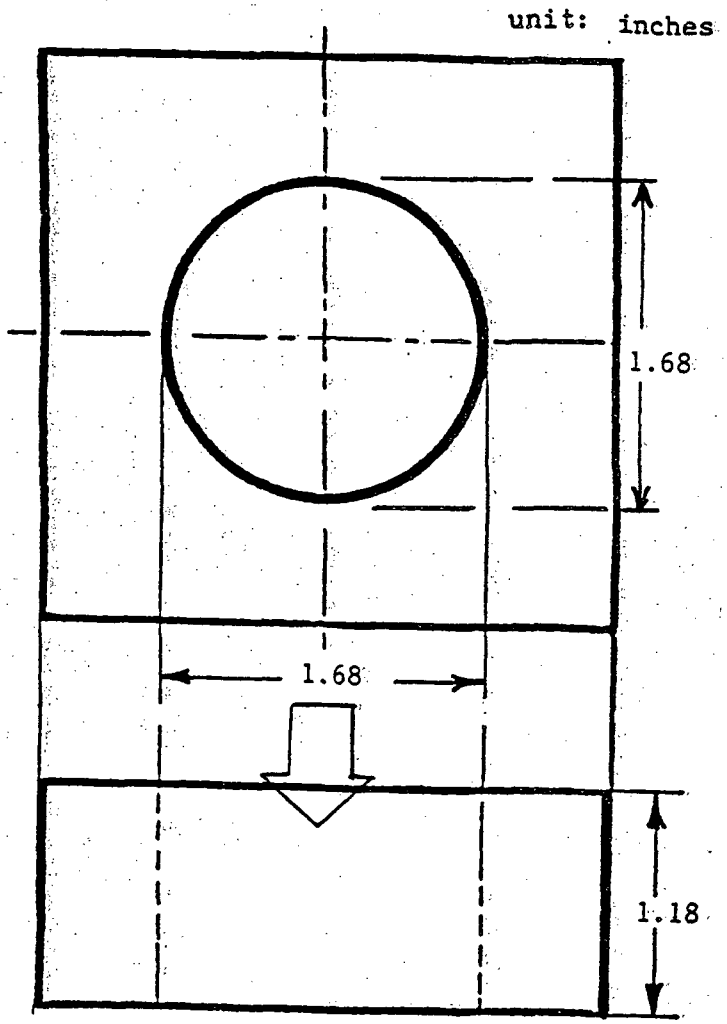

Material:

Force:

UNITED STATES GOVERNMENT

MEMORANDUM

U.S. CONSUMER PRODUCT
SAFETY COMMISSION
WASHINGTON,D.C. 20207

TO : Eliane A. Tyrrell, EXPM
Through: Robert E. Frye, Director,EPHA RF 12NOV 1987
FROM : Deborah Tinsworth, EPHA DKT

SUBJECT: FY 88 Choking Hazards Project

This memorandum responds to your request for information on EPHA's data collection plans for the FY 1988 Choking Hazards Project.

In FY 1988, we are conducting a NEISS-based special study on choking hazards, for which the analysis will be completed in FY 1989. In this study, emergency room-treated ingestion and aspiration injuries involving toys and nursery products will be computer selected for follow-up investigation to determine victim and product characteristics, as well as the hazard scenario involved.

During the same time period, we will also be monitoring and following up on information from other sources, such as death certificates, consumer complaints, newspaper clippings, and medical examiner/coroner reports, for choking incidents to children which may have involved objects larger than the small parts test cylinder required by federal regulations.

These data collection activities should provide us with statistical as well as anecdotal data on choking incidents that should be helpful in defining the nature and scope of small parts-related problems that may exist.

If you have questions or comments about our plans, please give me a call.

UNITED STATES GOVERNMENT

MEMORANDUM

U.S. CONSUMER PRODUCT SAFETY COMMISSION
WASHINGTON, D.C. 20207

NOV 12 1987

TO : Elaine A. Tyrrell, EXPM
Through: Dr. Robert D. Verhalen, AED, Epidemiology

FROM : Deborah Tinsworth, EPHA DKT for RDV

SUBJECT: Small Parts Petition, HP87-2

This memorandum responds to your request for an evaluation of injury data cited in the Small Parts Petition, HP87-2.

The Petitioner referenced data from EPHA's October 1986 report, Data Update on Toy-Related Injuries, 1986, which stated that in 1985 small toys or parts thereof were responsible for 12,000 injuries. While this statement is basically correct, it should be clarified that these were not necessarily all choking-related injuries, as implied by the Petitioner. This estimate of hospital emergency room-treated injuries included about 4,700 injuries for which the diagnosis was ingestion, about 700 injuries for which the diagnosis was aspiration, and about 6,600 injuries for which the diagnosis indicated foreign body involvement. Based on a review of NEISS comments reported for these injuries, it appears that some children may have swallowed or inhaled these objects, or inserted them into their noses or ears, without actually choking on them.

The Petitioner also referenced 18 toy-related choking deaths from the 1986 report, which occurred between January 1985 and September 1986. In seven cases, the size of the object was not reported. In six cases, the object involved was a balloon, for which there are no dimensional requirements under federal regulations. In the remaining five cases, deaths were reported to have involved two balls (4.4cm and 1.5in), one eye from a stuffed toy (.5in), a plastic toy nail (2.38in x .75in), and a plastic toy animal (4.5in) that had a ball attached to its nose. Thus, four of the five incidents for which the size of the object was known involved objects which would not have fit into the small parts cylinder specified in the mandatory regulation. However, because these death data were strictly anecdotal, it not known how representative these incidents were of toy-related choking deaths in general.

78

UNITED STATES GOVERNMENT

Memorandum

U.S. CONSUMER PRODUCT
SAFETY COMMISSION
WASHINGTON, D.C. 20207

To : Elaine A. Tyrrell, EX-PB RS Date: November 19, 1987
Through: Dr. Robert D. Verhalen, AED,
Epidemiology
James E. Bradley, Director, EPHF
From : Shelley Waters Deppa, EPHF SWD
Subject: Human Factors Input to Small Parts Petition Briefing Package

This is in response to your request for a characterization of whether data cited by the petitioner indicate that the size of the small parts test cylinder may be too small. The petitioner cited two data sources of choking incidents on objects larger than the small parts cylinder in support of their request that a new small parts standard be designed to require all toys intended for children under three years of age to have a diameter of at least 1.68 inches.

The first source is the 1983 report, Human Factors Analysis, Choking Incidents in Children which identified 195 choking incidents including 37 deaths, between July 1973 and May 1983, on children's products larger than the small parts cylinder. Since the goal of the 1983 analysis was to identify commonalities in product characteristics, such as size and shape, all choking incidents occurring on children's products larger than the small parts cylinder were included. Therefore, objects not subject to the small parts test, such as rattles and pacifiers, were counted.

In the 1983 report, a proposal for a generic test fixture was developed to replace the small parts, rattle, and pacifier test fixtures. This test fixture consisted of a 1.68 inch diameter cavity with a depth of 1.18 inches. As a result of this report, a voluntary standard now exists for rattles, squeeze toys, and teethers, with more stringent requirements than the Commission's mandatory standards. Specifically, the ASTM F963-86 Standard Consumer Safety Specification on Toy Safety states that certain shaped rattles, in addition to meeting the mandatory rattle standard, are also subject to a supplementary test fixture with a 1.68 inch diameter cavity. It further states that all squeeze toys and teethers, in addition to meeting the mandatory small parts test fixture, are also subject to the rattle tester used in the mandatory rattle standard, and that certain shaped squeeze toys and teethers are subject to the supplementary 1.68 inch diameter test fixture cavity. At that time, it was determined that no action would be taken on other toys involved in choking incidents for two reasons. First, the industry felt that choking data on other toy types were less compelling. Second, because the other toy types were so diverse, it was felt that the supplementary test fixture could not effectively screen out

80

characteristics of toys involved in choking incidents. For example, while use of the supplementary test fixture would require the redesign of limbs on many stuffed bears, this product has not been involved in choking incidents.

Therefore, clarifications should be made about using the numbers cited in the 1983 analysis to indicate that the small parts test fixture may be too small. First, while pre- as well as post-standard rattles and pacifiers were included in this analysis, these pre-standard objects are no longer on the market. In addition, if the voluntary standard has a high degree of conformance, certain hazardous rattles, squeeze toys, and teethers, are no longer on the market. After taking these points into account, 71 choking incidents, which includes 14 deaths and one brain damage, cited in the 1983 report, have not been addressed by any existing mandatory or voluntary standard.

The second data source cited by the petitioner is some raw data obtained from CPSC in 1986. The petitioner analyzed this data and determined that 13 choking incidents, which included 8 deaths, between 1978 and 1986, occurred on objects larger than the small parts test fixture. It would be nearly impossible to verify these numbers since the petitioner received only a subset of the data compiled under contract in 1986. (The data were sent to the petitioner while the contract was still in process.) We do not know which cases these included.

Subsequent to the petitioner receiving the subset of raw data in 1986, the Contractor characterized all the raw data in a report entitled Characteristics of 232 Non-Statistically Selected Choking Investigations Conducted by the Consumer Product Safety Commission, April 1987. The contractor determined that there were 26 incidents of choking on toys intended for children ages 2 and younger involving toys which did not fit into the small parts cylinder. It should be noted that since these data include all choking incidents investigated between 1978 and June 1986, undoubtedly, some overlap exists between this source of data and the 1983 report.

Further, we are aware that choking incidents on objects larger than the small parts tester are continuing to occur. The recent death and 4 choking incidents on the cereal box premium ball is a prime example. Therefore, the Children's and Recreational Products Hazard Team has initiated a project beginning in FY 1988 to identify, investigate, compile, and analyze these incidents. The Division of Hazard Analysis' memo further describes the data collection efforts. In FY 1989, Epidemiology will analyze these data

8A

and develop approaches to addressing toys involved in choking incidents.

In conclusion, from a human factors perspective, we believe the petition has merit because of the occurrence of choking incidents on objects larger than the small parts tester. However, we think it is premature to be limited to any solution, such as that suggested by the petitioner, until the problem has been analyzed in greater detail.

82

UNITED STATES GOVERNMENT

Memorandum

U.S. CONSUMER PRODUCT
SAFETY COMMISSION
WASHINGTON, D.C. 20207

November 10, 1987

To: Elaine A. Tyrrell, EX-P
Thru: Warren J. Prunella, Acting AED, EC WJP
From: Terrance R. Karels, ECSS TRK

Subj: Small Parts Petition --- HP 87-2

You asked that we provide some general economic information about the toy and game industry as part of the Briefing Package on the Small Parts Petition, HP 87-2. Attached is a market sketch of the toy and game industry, prepared in 1985 by Marcia Kolodny of our staff. We have developed additional economic information on these products, as follows:

Retail Sales

According to government and trade sources, retail U. S. sales of toys and games were in the range of $12-15 billion in 1986. Our best preliminary estimate of the quantity of toys sold would be perhaps 1.5 billion units. Well over 50% of all retail toy sales occur during the Christmas season, the six-week period preceeding the holiday.

U.S. Imports

The customs value of U.S. imports of toys and games in 1986 was $1.9 billion. The retail value of imports is substantially higher, with mark-ups at the importer, wholesale, and retail levels. If we assume the level of mark-ups at 400%, imports would represent $7.6 billion in retail sales --- or about 60% of total retail sales. According to U.S. trade experts, the proportion of imports to total sales varies by product, from about 40% of wooden toys to about 80% of dolls and stuffed animals.

Costs of Modification

If the petition were granted and further research indicated that significant design modifications were necessary to meet any changes in the small parts regulation, the cost and prices of some toys could increase. For example, if some injection molded toys did not pass a revised small parts test, compliance costs could include retooling the molds and increased materials costs. There may also be increased labor costs associated with the modified products. While retooling is a one-time cost, and may be amortized over the entire production run, the other costs will continue over the production life of the products. Further, since the cost of shipment is often based on bulk as well as weight, the cost of shipment could also increase.

The increased costs are expected to be very small on a per-unit basis, and the numbers of affected products will determine the overall costs. If we assume that the increased costs of production of the modified toys and games was 1 cent per unit, the overall impact of the modifications at retail would be, on average, 2-4 cents per unit. The total yearly consumer costs of modification would be:

Percentage Affected	Increased Retail Expenditures
If 25%	$7-15 million
If 10%	3-6 million
If 5%	1.5-3 million
If 1%	.3-.6 million

The above calculations are not intended to indicate our estimate of the increased costs associated with a modification of the small parts regulation, but are presented for illustrative purposes. If additional information on the extent of proposed changes becomes available, we will prepare a more precise estimate of the expected costs of those changes.

We have no information on the extent to which products might be discontinued without replacement by manufacturers or importers; the potential cost to the public would depend on the availability and price of reasonable substitutes for discontinued products. However, from the information now available, if all the

deaths from small parts were associated with less than about 10% of toys, and if the modification described above were fully effective in eliminating those deaths, the changes may be in the public interest.

UNITED STATES GOVERNMENT

Memorandum

U.S. CONSUMER PRODUCT
SAFETY COMMISSION
WASHINGTON, D.C. 20207

TO : Elaine Tyrrell, OPMB

DATE: November 30, 1987

FROM : Alfred L. Roma, AEDFO

SUBJECT: Briefing Package on Petition HP 87-2 -- Amend the Small Parts Regulation

As requested in the above subject briefing package, the rationale for the recommendation from Field Operations is outlined below.

RECOMMENDATION: Deny the petition submitted jointly by the Consumer Federation of America (CFA) and the New York Attorney General's Office requesting an amendment of the Commission's small parts regulation.

RATIONALE:

-- Data supplied to date does not indicate an unreasonable risk of injury associated with toys that currently comply with the small parts regulation but may be involved in choking incidents, and,

-- The mandatory regulation is adequate to eliminate risks of injury.

Additionally, it is my understanding the staff has already initiated a project to address choking hazards (beginning 10/1/87) and to continue as part of CPSC's Operating Plan for Fiscal Year 1988. In view of this project, it appears somewhat premature to grant the subject petition at this time.

UNITED STATES GOVERNMENT

Memorandum

U.S. CONSUMER PRODUCT SAFETY COMMISSION

TO : Elaine A. Tyrrell, OPMB

DATE: November 30, 1987

FROM : Dr. Robert D. Verhalen, AED, EP

SUBJECT: Epidemiology Position on Petition HP87-2 Amend the Small Parts Regulation

Epidemiology recommends denying this petition. While the data previously gathered by our staff call into question the adequacy of the existing small parts standard, granting the petition would be premature for several reasons. We do not believe that data currently on hand are sufficient to support rule making. This is true for two reasons.

- Data presented by our staff in the 1983 human factors report and referenced by the petitioner, include many cases which, while appropriate for raising issues of size, shape, flexibility, etc., are not really cases which would be addressed by a new small parts rule. For example, pacifiers and rattles are addressed by other mandatory standards. Toys intended for children 3 years and over and toys which caused choking outside the United States would not be addressed by a new small parts rule. In addition, since the toy safety voluntary standard has now addressed rattles, squeeze toys, and teethers, a new small parts rule may not be needed to address these toys. When these cases are deleted from the 1983 study, the remaining total is 66 incidents including 11 deaths. Thirty of these cases, including three of the deaths, involved one specific manufacturer's product which has since been corrected. All of these data were for the 10 year period 1973-1983.

  In addition, the 1986 data referenced by the petitioner overlap with the 1983 data, so it is not clear how many additional cases are included. The 1986 cases also include products such as balls which may have been parts of games clearly not intended for children less than 3 years of age.

  It is also important to note that proportions of cases referred to in the petition could be misleading. e.g.,

  > "more than half of the total 195 choking incidents involved young children using toys intended for children under three, which were larger than the standard."

  There are selection biases at work in determining which cases get reported to CPSC. For those cases assigned for investigation, there has been an overriding interest in finding cases involving products larger than the tester. In addition the data include

situations like the one described above, where one manufacturer's product accounted for 30 cases, 23 of which were found in the company files after the product was identified as a problem.

This does not discount the number of cases found but demonstrates the inappropriateness of computing proportions from these data.

- o More information is needed about the sizes, shapes, textures, and other critical parameters of objects involved in choking incidents. Since a project to collect and evaluate data is scheduled for this fiscal year, the necessary information to support a rulemaking process may be available in the future.

Until all the data can be properly analyzed in conjunction with the data being gathered, we do not believe it is appropriate to initiate rulemaking.

Once the appropriate data have been gathered, they may provide the information necessary for the industry to develop a voluntary standard, if appropriate changes can be identified.

Should the Commission, after reviewing all of the data, decide on a mandatory rule, it should not be limited to the approach outlined by the petition.

30 NOV 1987

To: Douglas L. Noble, Director, OPMB

From: Warren J. Prunella, Acting AED, EC WJP

Subject: Petition HP 87-2 to Amend the Small Parts Regulation

We have been asked to make a recommendation to grant or deny the petition from the Consumer Federation of America and New York State Attorney General's Office requesting the CPSC to amend 16 C.F.R. Section 1501.4 to require that the size of the small parts cylinder be enlarged.

There is general agreement that the small parts requirements need review; the Commission has resources in FY 88 and FY 89 to address this issue. Until that work is done, any recommendation made with the information on hand is necessarily based on speculation on the outcome of future studies.

In our opinion, the petitioners do not meet the requirements for granting the petition; they do not demonstrate that the risks are unreasonable or that the current requirements are inadequate. The petitioners only tell us what we already know, i.e., the information that led us to plan for the review. Our reading of Commission materials in the package and the petitioners' argument persuade us that granting the petition would be premature. Therefore, we recommend denying the petition. In making this recommendation, we are also aware of the Engineering Sciences and Health Sciences concern that the current cylinder does not meet the criteria recommended by the Accident Prevention Committee of the American Academy of Pediatrics that were intended to prevent acute tracheal obstruction.

Speculation on the part of our staff indicates that if a small number (say around ten percent or less) of the estimated billion- and-a-half toy units sold every year would be in the range between the current test cylinder and the enlarged cylinder,or have parts in that range,and if all the fatalities are associated with toys in this range, and if the consumer price impact is no more than around a nickel a unit, then enlarging the cylinder may make sense from an economic perspective. Of course we won't know the unknowns until the epidemiology and human factors work is completed.

911

UNITED STATES GOVERNMENT

MEMORANDUM

U.S. CONSUMER PRODUCT SAFETY COMMISSION
WASHINGTON, D.C. 20207

01 DEC 1987

TO : Elaine Tyrrell

FROM : Andrew G. Ulsamer, Ph.D., AED/HS AGU

SUBJECT: Small Parts Petition

The Health Sciences review of the small parts briefing package indicates that the the petitioner has not established how many deaths and injuries might be prevented if the petition were to be granted. There are also questions about how much of an increase in the diameter of the testing cylinder is needed, whether the length of the cylinder is adequate and the need for a generic test fixture to screen all children's products (as expressed in the Human Factors study attached to the petition).

Given these uncertainties which require additional data to address the choking hazard raised by the petition and the existence of a choking project, which is designed to answer these uncertainties, Health Sciences believes that there is no need to grant this petition. We recognize that from a medical perspective, the existing small parts cylinder dimensions are not adequate to prevent all choking incidents from occurring. With this in mind, Health Sciences recommends that the existing project be examined to see if it can be accelerated within, or approximately within, existing resource constraints and whether the issue raised by the petitioner could be addressed sooner rather than later in the project. Consideration should also be given to soliciting comments from the medical community, the industry and other interested parties on issues such as the diameter and length of the small parts cylinder, injuries and impact of changes in the regulations. This could be done by a workshop or an advanced notice of proposed rulemaking.

92

UNITED STATES GOVERNMENT

MEMORANDUM

U.S. CONSUMER PRODUCT
SAFETY COMMISSION
WASHINGTON, D.C. 20207

November 30, 1987

TO : Elaine Tyrrell, Project Manager, CRP, OPMB

Through: Carl Blechschmidt, Program Manager, CRP, OPMB

FROM : David Shiflett, Director, OIPA

SUBJECT: Petition HP 87-2 to Amend the Small Parts Regulation

The opinion of the Office of Information and Public Affairs is to deny this petition for the reasons mentioned in the briefing package: 1) the data does not support the rulemaking, and 2) staff, in its investigation of choking hazards, does not rule out some future modification of the small parts regulation, if the evidence gathered in 1988 supports such a change.

93

UNITED STATES GOVERNMENT

MEMORANDUM

U.S. CONSUMER PRODUCT SAFETY COMMISSION
WASHINGTON, D.C. 20207

TO : Elaine Tyrrell, EX-PB November 30, 1987

FROM : William W. Walton, AED, ES WW3

SUBJECT: Petition HP 87-2 to Amend the Small Parts Regulation.

I believe that the Commission should grant the subject petition because there appears to be a continued risk of choking on objects which comply with the current requirements of the subject regulation. However, I believe we should reserve our judgment on the type and size of test fixture that might be used until the staff has more clearly identified the nature of the risk. Following, are my reasons for recommending that the Commission should consider granting the petition.

1. The petitioner has used the Commission's own data to illustrate that toys which comply with the requirements of the current regulation have been involved in fatal choking incidents. According to the EPHF memo at Tab D, at least 71 choking incidents have occurred on objects that would comply with the current mandatory or voluntary requirements. These resulted in 14 fatalities and one case of brain damage. Furthermore, as recently as September 1987 we became aware of another choking death and four non-fatal choking incidents on a ball that was a premium in a cereal box despite the fact that the manufacturer of the cereal had responded to an earlier letter from CARM and ensured that the ball complied with the small parts regulation.

2. The design of the small parts cylinder evolved from size criteria recommended by the Accident Prevention Committee of the American Academy of Pediatrics (AAP) that were intended to prevent acute tracheal obstruction. Toys which fit into the 1-1/4 inch diameter cavity of the small parts test cylinder but, because of their length, project above the top surface of the cylinder, comply with the requirements of the regulation. However, dimensionally, such toys do present a choking hazard when compared to the AAP size criteria from which the design of the cylinder evolved.

3. A study to determine the size of toy/toy parts which caused choking was performed for the Commission in 1977. This study revealed that "toy/toy parts/objects from 5 mm to 44 mm (0.2 inch to 1.73 inch) in greatest diameter can produce fatal obstructions of the oral pharyngeal tracts." Some of these toys (those with diameters between 1.25 and 1.73 inches and those that have sufficient length to protrude from the current test cylinder) would comply with the requirements of the small parts regulation.

Furthermore, I do not agree with the staff resource estimates that the briefing memorandum states would be required if the petition is granted. The FY 1988 Operating Plan and FY 1989 Budget already contain resources for a project on Choking Hazards which is performing most of the work that would result from the granting of the petition. It appears to me that the only additional work in FY 1988 that would result from granting the petition would be the staff attorney time required to draft an ANPR for publication in the Federal Register. Finally, if the provisions in the Senate Reauthorization Bill at Section 16(b) and (c) are adopted, a Federal Register notice will be required almost immediately in order to solicit comments from interested persons and respond to Congress in the stated nine month time period. If the Commission grants the subject petition, this process will be essentially automatic.

UNITED STATES GOVERNMENT

Memorandum

U.S. CONSUMER PRODUCT
SAFETY COMMISSION
WASHINGTON, D.C. 20207

TO: Elaine Tyrell, Project Manager
Office of Program Management and Budget

DATE: November 30, 1987

FROM: Walter Hobby, Director
Office of Planning and Evaluation

SUBJECT: Briefing Package on Petition HP 87-2

I recommend that the petition be granted. From what I read in the briefing package it seems likely that the cylinder diameter and perhaps the length requirement will be changed. A project is already in place to examine the issues involved and has been put on a faster track than originally planned. It may be premature without further data and analysis to say precisely what the changes should be and to what extent they should be mandatory or voluntary, but in the end some change in the mandatory rule seems inevitable. Why not make it clear to industry and the public that this is where we are headed and avoid any appearance of reluctance to improve on past efforts? In granting the petition we can surely draw whatever distinctions need to be made between the goal of a more effective standard and the technical specifications and cost benefit considerations that must be developed along the way.

UNITED STATES GOVERNMENT

MEMORANDUM

U.S. CONSUMER PRODUCT SAFETY COMMISSION
WASHINGTON, D.C. 20207

TO : Elaine Tyrrell, OPMB

NOV 30 1987

FROM : David Schmeltzer, Associate Executive Director
Directorate for Compliance and Administrative Litigation

SUBJECT: Small Parts Petition -- AEDCA Recommendation

I recommend granting the small parts petition in part. I do not believe that the information we have at present is sufficient to determine whether the test fixture proposed by the petitioner is the appropriate one to address the hazard. Therefore, I recommend that we not adopt the recommended test fixture at this time. However, I believe there is sufficient evidence to indicate that the existing small parts requirement should be improved to prevent choking deaths on toys that comply with the small parts requirement. There have been 14 choking deaths and one brain damage over a 10 year period, as cited by Shelly Deppa in her 1983 study, which are not addressed by existing mandatory or voluntary standards.

Although the Commission staff has already started a special study to collect data on choking incidents to be used in evaluating the existing small parts requirement, granting the petition in part and publishing an advance notice of proposed rulemaking would help to ensure continued support of the project over the next two to three years until the evaluation is completed and recommendations are developed and implemented. An ANPR could help us obtain more information about choking incidents and mechanisms, and such information could contribute to the staff evaluation of the regulation. In addition, an ANPR could also improve the possibility of the development of a better voluntary standard.

O

975

UNITED STATES GOVERNMENT

Memorandum

U.S. CONSUMER PRODUCT
SAFETY COMMISSION
WASHINGTON, D.C. 20207

DEC 4 1987

TO : The File

FROM : Douglas L. Noble, Director, Office of Program Management and Budget

SUBJECT : Petition HP 87-2 to Amend 16 C.F.R. Section 1501.4.

OPMB staff recommends that the Commission deny petition HP 87-2. There is a project in the Fiscal Year 1988 Operating Plan dealing with Choking Hazards (Project Number 22680R). A copy of the project description developed by the staff for review by the Office of the Executive Director is attached.

From a review of this project description it can be clearly seen that staff plans to accomplish a specific series of tasks before making recommendations to the Commission on revising the regulation referenced above. In the view of OPMB staff, it would be inappropriate to recommend granting the petition at this time, relying only on the information presented by petitioners.

Attachment

98

PROGRAM: HAZARD ASSESSMENT & REDUCTION ELECTRICAL/MECHANICAL/CHILDREN

PROJECT WORKSHEET FY 88 OPERATING PLAN REQ.X CURR.___ ENH.___ 09/23/87

PROJECT NO:	22680R	TITLE:	CHOKING HAZARDS	RANK:		LEVEL:	1R

R E S O U R C E S

	OPMB	EPI	ECON	ENG	HS	OMR	CA	ADM	OS	OIPA	OGC	EX	COM	AO	TOTAL
PROFESSIONAL STAFF MONTHS		10.0													10.0
CONTRACT DOLLARS															

PROJECT DESCRIPTION/JUSTIFICATION/EXPECTED ACCOMPLISHMENTS

CPSC REGULATIONS FOR SMALL PARTS RATTLES & PACIFIERS HAVE BEEN EFFECTIVE IN ELIMINATING PRODUCTS PRESENTING CHOKING HAZARDS FROM THE MARKETPLACE BY SETTING MINIMUM SIZE REQUIREMENTS. HOWEVER, DEATHS AND CHOKING INCIDENTS CONTINUE TO OCCUR WITH PRODUCTS COMPLY WITH THESE REGULATIONS. FROM JULY 1973 TO MAY 1983, 37 DEATHS AND 158 CHOKING INCIDENTS INVOLVED PRODUCTS LARGER THAN THE SPECIFIED MINIMUM SIZE. STAFF WORKED WITH TOY MANUFACTURERS TO DEVELOP ADDITIONAL SAFETY PROVISIONS (TO THE RATTLE REGULATION) TO ADDRESS THE CHOKING HAZARDS WITH RATTLES, TEETHERS & SQUEEZE TOYS.
SEVERAL CRITIQUES INCLUDING A PETITION, HAVE BEEN MADE OF THESE REGULATIONS. THE PURPOSE OF THE PROJECT IS TO EVALUATE THE MERITS OF THESE CRITIQUES AND TO DEVELOP RECOMMENDATIONS FOR INCREASING THE EFFECTIVENESS OF THESE REGULATIONS IN REDUCING DEATHS AND INJURIES FROM CHOKING.
IN FY 88, A SPECIAL STUDY WILL BE CONDUCTED ON CHILDREN'S CHOKING INCIDENTS. IN FY 89 A HAZARD ANALYSIS WILL BE COMPLETED. IN FY 90 A HUMAN FACTORS ANALYSIS WILL BE PREPARED (INCLUDING CRITERIA FOR DEVELOPMENT OF PROTOTYPE TEST FIXTURES) & STAFF RECOMMENDATIONS DEVELOPED. STAFF WILL IMPLEMENT CPSC DECISIONS IN SUBSEQUENT YEARS.

CONTRACTS	ORGN	AMT	PURPOSE/JUSTIFICATION

December 1, 1987

Ms. Phyllis Spaeth
#1 Fifth Avenue
Apt. 4D
New York, NY 10003

re: Petition HP 87-2
Small Parts Regulation

Dear Ms. Spaeth:

The staff will brief the Commission on your petition HP 87-1 at its December 17, 1987 Commission meeting. I have enclosed a copy of the briefing package the staff has prepared.

When your petition is scheduled for a decision you will be notified, whether it be by ballot vote or at a Commission Meeting. If you have any comments on the staff briefing paper, please submit them to the Office of the Secretary, they will than be transmitted to the Commission for consideration.

If I can be of further assistance, please do not hesitate to contact me directly on (301) 492-6800.

Sincerely,

/S/

Patricia Chisley,
Office of the Secretary

enclosure