1. Task Number	2. Investigator's ID	EPIDEMIOLOGIC INVESTIGATION REPORT
080415HWE7319	9080	

3. Office Code	4. Date of Accident YR MO DAY	5. Date Initiated YR MO DAY
840	2008 04 12	2008 04 29

6. Synopsis of Accident or Complaint **UPC**

A 43-year-old male victim was riding a side-by-side, utility vehicle at night. The vehicle struck the end of an open metal gate. The end of the pipe gate came into contact with the driver, causing a serious/fatal injury. The victim died as a result of this incident. He was not wearing a helmet. A sheriff's department official had surmised at the incident site that the victim sustained fatal, internal injuries.

MFR/PRVLBR NOTIFIED

COMMENTS: __YES ✓NO
__OVERRULED; __ATTACHED

✓EXCISIONS/FOIA EXS. 25c; 3, 6

✓DO NOT RE-NOTIFY __RE-NOTIFY
080731

7. Location (Home, School, etc)	8. City	9. State
4 - STREET OR HIGHWAY	ANGELINA COUNTY	TX

10A. First Product	10B. Trade/Brand Name	10C. Model Number
5044 - Utility Vehicles	YAMAHA	RHINO

10D. Manufacturer Name and Address
YAMAHA MOTOR CORPORATION, USA
6555 Katella Avenue
Cypress, CA 90630

11A. Second Product	11B. Trade/Brand Name	11C. Model Number
1871 - Fences or fence posts	UNKNOWN	UNKNOWN

11D. Manufacturer Name and Address
UNKNOWN

12. Age of Victim	13. Sex	14. Disposition	15. Injury Diagnosis
43	1 - Male	8 - Death	62 - Intern. Org. Inj.

16. Body Part(s) Involved	17. Respondent	18. Type of Investigation	19. Time Spent (Operational / Travel)
75 - HEAD	3 - 2nd Hand Info Only	2 - Telephone	8 / 0

20. Attachment(s)	21. Case Source	22. Sample Collection Number
2 - Documents	05 - Newspaper	

23. Permission to Disclose Name (Non NEISS Cases Only)

○ Yes ● No ○ Verbal ○ Yes for Manuf. Only

24. Review Date	25. Reviewed By	26. Regional Office Director
06/03/2008	8631	Frank J. Nava

27. Distribution	28. Source Document Number
Streeter, Robin	N0840174A

Information contained in this report originated from a newspaper article. Additional information came from the related sheriff's report and a phone interview with the sheriff. There were no direct witnesses to this incident. According to a statement made by the sheriff, an autopsy was not performed. Accident scene photos were taken but the sheriff stated that a subpoena would be required to obtain the photographs. The victim is a 43-year-old male. The product is an off-road, side by side utility vehicle. The utility vehicle is a Yamaha Rhino, which is green in color. The engine size is 450cc. The purchase price, purchase location and other particulars about the incident product are unknown.

The incident occurred at night at approximately 10:25 p.m. on April 12, 2008. A rider on another ATV in the area heard a loud noise and looked to see what had happened. He noticed that a utility vehicle stopped at a steel gate. The rider went over to investigate and saw the rider of the utility vehicle had been injured. He called 911 for assistance. According to the sheriff's report, the victim was driving the utility vehicle when it crashed into the end of a pipe gate, which was extended into the road. The end of the pipe gate made contact with the victim causing serious bodily injury/death. When the sheriff arrived on the scene the victim was lying on his back with his face covered by a yellow piece of thin plastic. The steering wheel of the utility vehicle was broken and laying on the ground. The driver's seat had also been damaged and was lying on the floorboard of the utility vehicle. Statements made by the sheriff during a phone conversation revealed the following: The gate is what is commonly referred to as a pipe gate. The end part of the open gate, which was struck by the victim, was a 12" by 12" piece of steel plate. The gate went through the windshield and knocked the victim out of the back of the utility vehicle. The victim was not wearing a helmet at the time of the incident.

Product manufactured by:
Yamaha Motor Corporation, USA
6555 Katella Avenue
Cypress, CA. 90630

Website: www.yamaha.com

Attachments

I. Respondents
One (1) Page

II. Sheriff's Report
One (1) Page

Respondents

Angelina County Sheriff's Department
Alan Hill/Sheriff
2311 E. Lufkin Ave.
Lufkin, TX. 75901

Phone:
(936) 634-3331

080415HWE7319

INCIDENT REPORT (244959.1)

Case Number: 08-04659 by Officer SOKM (MOORE, KODY) 04/13/2008 04:24

On Saturday April 12, 2008 at approximately 10:27 P.M. dispatch advised Zavalla PD Officer T. Stuart of a 4 wheeler accident on Saron Rd. Officer Stuart responded to assist Lufkin Fire/EMS find the location. Officer Stuart arrived and requested further assistance from Deputy Kody Moore. Officer Stuart advised dispatch that the victim had died due to his injuries which he sustained during the 4 wheeler accident. Several family members were at the location and were very upset causing a disturbance. Deputy Moore responded to assist Officer Stuart.

Deputy Moore arrived and observed Officer Stuart and Lufkin Fire/EMS on location. Deputy Moore approached the accident scene and observed the following. Several male subjects standing near a green Rhino 450 ATV. A pipe gate was protruding through the driver side of the Rhino ATV. The pipe gate extended outward toward the right rear of the ATV. The pipe gate was partially opened into the path of the ATV. An unidentified w/m subject was lying on his back covered by a yellow piece of thin plastic. The w/m had visible injuries to his face.

Deputy Moore located (b)(3):CPSA Section 25(c),(b)(6) w/m who had been in the area at the time of the accident (b)(3):CPSA was riding his 4 wheeler in Duram Hill traveling toward Saron Rd. (b)(3):CPSA passed a pipe gate which was located near Saron Rd (b)(3):CPSA heard a loud noise and looked back and noticed a Rhino stopped at the gate. (b)(3):CPSA Section traveled back to the gate and realized the driver had been injured. (b)(3):CPSA Section called 911.

The pipe gate was partially opened with one end extending into the path of traffic. The green Rhino approached the gate and crashed into the portion which was extended into the road. The end of the pipe gate made contact with the w/m victim causing serious bodily injury/death. The steering wheel was broken and was lying on the ground. The driver seat had also been damaged and was lying on the floor board of the ATV. The accident occurred across the road from 2858 Saron Rd at approximately 10:25 P.M. on 04-12-2008.

(b)(3):CPSA Section 25(c),(b)(6) arrived at the scene. Deputy Moore took digital images of the damaged Rhino. (b)(3):CPSA Section 25(c),(b)(6) allowed family members to transport the body to a family members residence about 1 mile away. Lt Rapsilver took digital images of the victim at the family members residence.

The victim was identified as (b)(3):CPSA Section 25(c),(b)(6) w/m DOB (b)(3):CPSA Section 25(c),(b)(6) next of kin was identified as (b)(3):CPSA Section 25(c),(b)(6) (b)(3):CPSA Section 25(c),(b)(6)

After completing the investigation it appears the death of (b)(3):CPSA Section was an accident. (b)(3):CPSA Section 25(c),(b)(6) did NOT request an autopsy.

Task Number 080415HWE7319

INTERVIEWER: When the response to a particular question is unknown, please leave blank.

Type of respondent: Police Department

Other, specify:

1. What type of vehicle was involved in the incident? (If vehicle is not an ATV, or if ATV has more than 4 wheels, politely thank respondent for her/his cooperation and terminate interview).

1 - 3 wheeled ATV
2 - 4 wheeled ATV
3 - ATV with unknown number of wheels
4 - 2 wheeled motorcycle
5 - Dune Buggy
6 - ATV with more than 4 wheels
(7) - Utility Vehicle
8 - Other Vehicle
0 - Unknown

2. What is the manufacturer/brand name of the ATV(s) involved in the incident? If more than two ATVs, use an additional sheet.

ATV #1	ATV #2
Manufacturer: 02 - Yamaha	**Manufacturer:**

3. What is the model name or number and/or vehicle identification number (VIN) of the ATV?

Model: Rhino / **VIN:** N/A

4. What is the model year of the ATV? (Record last two digits of model year. For example 89,90).

Model Year: n/a

5. What is the engine size (in CCs) of the ATV?

Engine Size: 425-450

6. Was there more than one death involved in this incident? If more than two individuals were killed use an additional sheet.

Death #1	Death #2
Date of Death: 04/12/2008	
Age/Sex: 43/Male	/
State of Death: TEXAS	
City of Death: Lufkin	
County of Death: Angelina County	

7. Describe how the incident occurred. (Use additional sheets if necessary).

A 43 year old male was riding a side by side utility vehicle at night. The vehicle struck the end of an open metal gate. The gate came into contact with the driver and he died as a result of this incident.

8. Did the ATV overturn/tipover/rollover? Unknown

9. If ATV overturned/tipped over/rolled over, did it land on the victim?

Victim 1:			Victim 2:		
Yes	No	(Unknown)	Yes	No	Unknown

10. Who was killed in the incident? Check all that apply.

(1) - Driver
2 - Passenger
3 - Bystander
4 - Driver/Other Vehicle
8 - Other/Unknown

11. Was the victim wearing a helmet at the time the incident occurred?

Victim 1:			Victim 2:		
Yes	(No)	Unknown	Yes	No	Unknown

12. How many riders (including the driver) were on the ATV at the time the incident occurred?

0 - Unknown
(1) - One rider
2 - Two riders
3 - Three riders
4 - Four or more riders
9 - No riders

13. List the following physical characteristics of the DRIVER of the ATV:

Age: 43 **Height:** (inches)
Weight: **Sex:** Male

14. How did the driver learn to operate an ATV (READ LIST)

1 - Organized Program — **Sponsor's Name:**
2 - Dealer/Salesperson — **Arranged through dealer:**
3 - Friend/Relative — **Friend/Relative Age:**
4 - Self
5 - Other (Specify)
(9) - Don't Know

15. What was the type of terrain (ground surface) being travelled at the time the incident occurred?

08 - Paved road

16. Type of road being travelled by ATV when incident occurred?

01 - Public road

17. Identify any other motor vehicle(s) involved in this incident.

09 - NA (Not a traffic incident)

18. Had the driver of the ATV used alcohol just prior to the incident?

0 - Unknown

19. Had the driver taken any drugs or medication just prior to the incident?

0 - Unknown

Additional Comments:

Item #3 VIN is unknown
Item #4 Model year unknown
Item #13 Height and weight unknown

#080415HWE7319 N0840174A 4/15/08

Huntington Man dies in ATV Accident Lufkin, TX.
April 14, 2008

ISSUE ; 29

By NICK WADE
The Lufkin Daily News
Monday, April 14, 2008

LUFKIN — A Huntington man died late Saturday in an ATV accident, according to Dennis Reynolds of the Angelina County Sheriff's Office.

Sometime before 10:30 p.m., the Rhino ATV that (b)(3):CPSA Section was driving struck a partially closed gate, throwing him through the back of the vehicle. (b)(3):CPSA 43, died before paramedics arrived at the scene.

According to Reynolds, several people were riding ATVs on back roads near FM 1270 in the Saron area. One subject passed through a gate that was partially open, and then heard a loud noise. Turning around, the subject realized that (b)(3):CPSA had struck the gate and had been thrown from the ATV.

"The first driver proceeded through the gate, and then immidiately heard the second ATV strike the gate," Reynolds said. "There was a flat metal plate that is welded onto the end of the gate. That is what the ATV actually hit, and it pushed him out the back."

(b)(3):CPSA was unconscious but breathing, according to the initial emergency call. However, by the time paramedics arrived, (b)(3):CPSA Section had stopped breathing.

"We're more than certain that he died of internal injuries," Reynolds said. "Nothing, as far as alcohol or anything like that, is known to have been involved at this point."

1. Task Number	2. Investigator's ID	EPIDEMIOLOGIC INVESTIGATION REPORT
080811CWE7665	1919	

3. Office Code	4. Date of Accident YR MO DAY	5. Date Initiated YR MO DAY
840	2007 08 19	2008 08 13

6. Synopsis of Accident or Complaint **UPC**

A 38-year-old female was injured when she was ejected off the back of a side by side utility vehicle as the driver was attempting to make a left turn. The victim was standing in the back of the utility vehide before ejected. The extent of the victim's injuries are not known. She was not wearing a helmet.

MFR/PRVLBR NOTIFIED
COMMENTS: __ YES / NO
__ OVERRULED; __ ATTACHED
/ EXCISIONS/FOIA EXS 25c.3, 6
DO NOT RE-NOTIFY __ RE-NOTIFY
08119 GC

7. Location (Home, School, etc)	8. City	9. State
4 - STREET OR HIGHWAY	VIOLA	MO

10A. First Product	10B. Trade/Brand Name	10C. Model Number
5044 - Utility Vehicles	(b)(3):CPSA Section 25(c),(b)(6)	RHINO 660

10D. Manufacturer Name and Address
YAMAHA MOTOR CORPORATION, USA
6555 Katella Avenue
Cypress, CA 90630

11A. Second Product	11B. Trade/Brand Name	11C. Model Number
0	NONE	NONE

11D. Manufacturer Name and Address
NONE

12. Age of Victim	13. Sex	14. Disposition	15. Injury Diagnosis
38	2 - Female	1 - Injured, not Hosp.	71 - Other

16. Body Part(s) Involved	17. Respondent	18. Type of Investigation	19. Time Spent (Operational / Travel)
85 - ALL OF BODY	3 - 2nd Hand Info Only	2 - Telephone	6 / 0

20. Attachment(s)	21. Case Source	22. Sample Collection Number
2 - Documents	05 - Newspaper	

23. Permission to Disclose Name (Non NEISS Cases Only)
○ Yes ● No ○ Verbal ○ Yes for Manuf. Only

24. Review Date	25. Reviewed By	26. Regional Office Director
09/15/2008	8929	Frank J. Nava

27. Distribution	28. Source Document Number
Topka, Tanya	N0790215A

This investigation was initiated based upon a news article reporting an ATV accident in which an adult female was injured. All efforts to interview the involved parties were unsuccessful. Therefore, information contained within this report was obtained from the Missouri State Highway Patrol Accident Report and news article.

According to Missouri Highway Patrol (MHP) accident report, four adults were riding a four-wheeled sport utility ATV or UTV in an unincorporated area near Viola, Missouri. The accident occurred around 1:40 a.m. on August 19, 2007, while the four were riding on an unlit stretch of a paved road which was dry, level, and straight. The UTV was being driven by a 36-year-old female at the time. The male owner of the UTV was seated in the passenger seat, while the 38-year-old female victim was standing in the back of the UTV. A third passenger, a 27-year-old female, was also standing in the back of the UTV. According to the MHP report, the driver was driving south on a street and stopped at an intersection to make a left turn onto another street. According to the driver's statement to the State Trooper, she was probably going too fast while attempting the left turn. The victim was thrown from the back of the UTV and landed on the paved street. A copy of the MHP accident report is attached as Exhibit 2.

The victim was subsequently taken via ambulance to St. John's Hospital in Berryville, Arkansas for treatment. Attached as Exhibit 3, is a copy of the Emergency Room Outpatient record pertaining to the victim. However, the one-page record does not specify the victim's injuries except to indicate that the diagnosis is "99231." Despite repeated attempts to contact the Records Department for the hospital to learn more about the victim's injuries, no further information could be obtained. According to the news article, the victim sustained "moderate injuries." Attempts were made to contact the victim by letter and telephone; however, those attempts were unsuccessful. Attempts to contact the owner of the UTV by letter and telephone were also unsuccessful. Attempts to contact the other individuals by letter were also unsuccessful.

Per the MHP report, it is believed that alcohol use probably contributed to the accident. No photographs were taken of the involved ATV.

Based upon the MHP report, the diagram below represents the location of all parties before the accident. None of the occupants wore helmets. It is unknown whether any of them wore any safety restraints, etc. Besides the victim, no one else was injured.

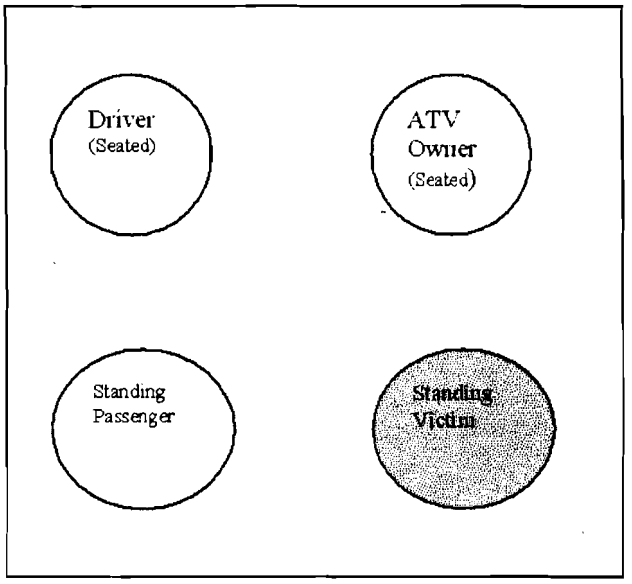

A diagram of the location of all persons riding the UTV prior to the accident

A research of the internet using search criteria, "2004 Yamaha Rhino 660" located the following website, http://www.atvconnection.com/Features/ATV_Reviews/Ultimate-Sport-Utility-ATV.cfm regarding a model UTV which is believed to be identical to the involved UTV. Below is a photo of a UTV (obtained from this website) which is believed to be identical to the involved UTV.

Photo1 – a photo of a UTV which is believed to be identical to the involved UTV.

PRODUCT IDENTIFICATION

Type:	sport utility vehicle
Brand:	**Yamaha**
Model:	**Rhino 660**
VIN:	5Y4AM06Y14A003258
Year:	2004
Manufacturer:	**Yamaha**

SAMPLE COLLECTED

None

ADDITIONAL INFORMATION

The Barry County Sheriff's Office and Stone County Sheriff's Office were contacted regarding this accident, and advised that they did not work this accident, therefore had no record pertaining to this case.

As previously mentioned, efforts to reach all parties involved in this accident, were unsuccessful. In addition, efforts to clarify medical injuries sustained were also unsuccessful. If however, additional information is received, an Addendum will be submitted.

ATTACHMENTS

1. Identity of Respondents
2. MHP report (4 pages)
3. Outpatient record (1 page)

IDENTITY OF RESPONDENT(S)

The respondents in this investigation are:

1. Records Department – Missouri Highway Patrol, Missouri Highway Patrol, Troop F Headquarters, P.O. Box 568, Jefferson City, MO 65102; initially contacted via mail (required) on 8/13/08

2. Medical Records Department – St. John's Hospital, 214 Carter Street, Berryville, AR 72616; records requested via fax (870) 423-5281 on 8/25/08

3. Virginia (LNU) Stone County Sheriff's Office, P.O. Box 245, galena, MT 65656; initially contacted via telephone (417) 357-6116 on 8/13/08

4. Barry County Sheriff's Office, 505 East Street, Cassville, MO; initially contacted via telephone on 8/13/08

Attempts to contact individuals:

NOTE: Internet research revealed no telephone number listed for Driver [(b)(3):CPSA] in [(b)(3):CPSA Section 25(c),(b)(6)] [(b)(3):CPSA Section] There were over 300 telephone listings for victim [(b)(3):CPSA Section] Therefore, attempts to reach the involved parties could not be made until the MHP accident report was received.

8/25/08- a telephone message was left for owner of UTV. [(b)(3):CPSA Section 25(c),(b)(6)] To date there has been no response. NOTE: The contact letter mailed to the UTV owner, was returned to the CPSC "RETURN TO SENDER REFUSED UNABLE TO FORWARD" without being opened.

8/25/08 – contact letters were mailed to all four individuals; to date there has been no response from any of the individuals

9/12/08 – a telephone message was left for victim [(b)(3):CPSA Section] no response

080811CWE7665 - Exhibit 1, Identity of Respondents. Page 1 of 1.

MISSOURI UNIFORM ACCIDENT REPORT

080811CWE7665 - Exhibit 2, Copy of Missouri Highway Patrol report. Page 1 of 4.

1 - AGENCY NAME AND ORI: MISSOURI STATE HIGHWAY PATROL — MOMHPDD00

LEFT THE SCENE	CLEARED	ACCIDENT CLASSIFICATION	PROPERTY DAMAGE ONLY	NUMBER INJURED	NUMBER KILLED	REPORT / CASE / INCIDENT NUMBER
[X] YES [ ] NO	[X] YES [ ] NO		[ ]	1	0	08190700171

NUMBER OF VEHICLES INVOLVED	ACCIDENT DATE	ACCIDENT TIME (MIL.)	TIME NOTIFIED (MIL.)	TIME ARRIVED (MIL.)	INVESTIGATION DATE
1	08/19/2007	0140	0149	0217	08/19/2007

2 - LOCATION

COUNTY	MUNICIPALITY	BEAT / ZONE	TRP / DIST / PCT	INVESTIGATED AT SCENE
Stone 105	Non-City Or Unincorporated 9999	15	D	[X] YES [ ] NO

ON	DISTANCE FROM	LOCATION	INTERSECTING STREET OR ROADWAY
CRD Fish n Fun Road	____ FEET ____ MILES	[ ] AFTER [ ] BEFORE [X] AT	CRD Bluebird Lane (N)

ROADWAY DIRECTION	SPEED LIMIT	SPEED LIMIT	GEO - CODE	GPS W LONGITUDE	GPS N LATITUDE
E	60	60	NA	093 34 34.9	036 34 02.1

ROAD MAINTAINED BY: [ ] 1. STATE [X] 2. COUNTY [ ] 3. MUNICIPAL [ ] 4. PRIVATE PROPERTY [ ] 5. OTHER

3 - DAMAGE TO PROPERTY OTHER THAN VEHICLES [X] NONE

GIVE OWNER'S NAME AND ADDRESS, DESCRIPTION OF PROPERTY, AND DAMAGE.
[ ] MoDOT

DRIVER 1

4. DRIVER'S FULL NAME (LAST, FIRST, MI) — ADDRESS (STREET, CITY, STATE, ZIP)

DRIVER LICENSE NUMBER / ID NUMBER	STATE	TYPE OF LICENSE	MC ENDORSEMENT
		[X] 1. OPERATOR CLASS C [ ] 2. CDL CLASS ____ [ ] 3. PERMIT [ ] 4. UNLICENSED [ ] 5. MC ONLY [ ] UNKNOWN	[ ] YES [ ] NO [X] NA

PROOF OF INSURANCE	INSURANCE COMPANY	POLICY NUMBER
[ ] YES [ ] NO [X] NOT REQUIRED	None [ ] DRIVER [ ] VEHICLE	[X] NA

VEHICLE 1

YEAR	MAKE	MODEL	COLOR
2004	Yamaha	Rhino 660	Camouflage

LIC. PLATE NO.	STATE	YEAR	VIN	TOTAL NO. OF OCCUPANTS
NO LIC. REQU	NA	NA		4

VEHICLE OWNER NAME (LAST, FIRST, MI) / COMMERCIAL CARRIER — ADDRESS (STREET, CITY, STATE, ZIP) [ ] SAME AS DRIVER

VEHICLE DAMAGE (Circle all damaged areas) [X] NONE — INITIAL IMPACT NO. [X] NA

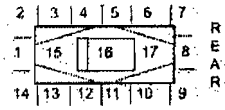

18 - Undercarriage
19 - Windshield
20 - Burned
21 - Towed Unit
22 - Cargo

TOWED FROM SCENE [ ] YES [X] NO

TOW CO. INFORMATION: NA

DRIVER 2

5. DRIVER'S FULL NAME (LAST, FIRST, MI) — ADDRESS (STREET, CITY, STATE, ZIP)

DRIVERS LICENSE NUMBER / ID NUMBER	STATE	TYPE OF LICENSE	MC ENDORSEMENT
		[ ] 1. OPERATOR CLASS ____ [ ] 2. CDL CLASS ____ [ ] 3. PERMIT [ ] 4. UNLICENSED [ ] 5. MC ONLY [ ] UNKNOWN	[ ] YES [ ] NO [ ] NA

PROOF OF INSURANCE	INSURANCE COMPANY	POLICY NUMBER
[ ] YES [ ] NO [ ] NOT REQUIRED	[ ] DRIVER [ ] VEHICLE	[ ] NA

VEHICLE 2

YEAR	MAKE	MODEL	COLOR

LIC. PLATE NO.	STATE	YEAR	VIN	TOTAL NO. OF OCCUPANTS

VEHICLE OWNER NAME (LAST, FIRST, MI) / COMMERCIAL CARRIER — ADDRESS (STREET, CITY, STATE, ZIP) [ ] SAME AS DRIVER

VEHICLE DAMAGE (Circle all damaged areas) [ ] NONE — INITIAL IMPACT NO. [ ] NA

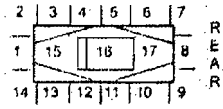

18 - Undercarriage
19 - Windshield
20 - Burned
21 - Towed Unit
22 - Cargo

TOWED FROM SCENE [ ] YES [ ] NO

TOW CO. INFORMATION

6 - WITNESS [X] NONE IDENTIFIED

NAME OF WITNESS	ADDRESS (STREET, CITY, STATE, ZIP)	TELEPHONE NO.
NA		
NA		
NA		
NA		

7. COLLISION DIAGRAM | Direction Prior to Impact (circle one) V1 N (E) S W V2 N E S W V3 N E S W V4 N E S W | Est. Speed - Fatals Only V1 NA V2 NA V3 NA V4 NA

080811CWE7665 - Exhibit 2, Copy of Missouri Highway Patrol report. Page 2 of 4.

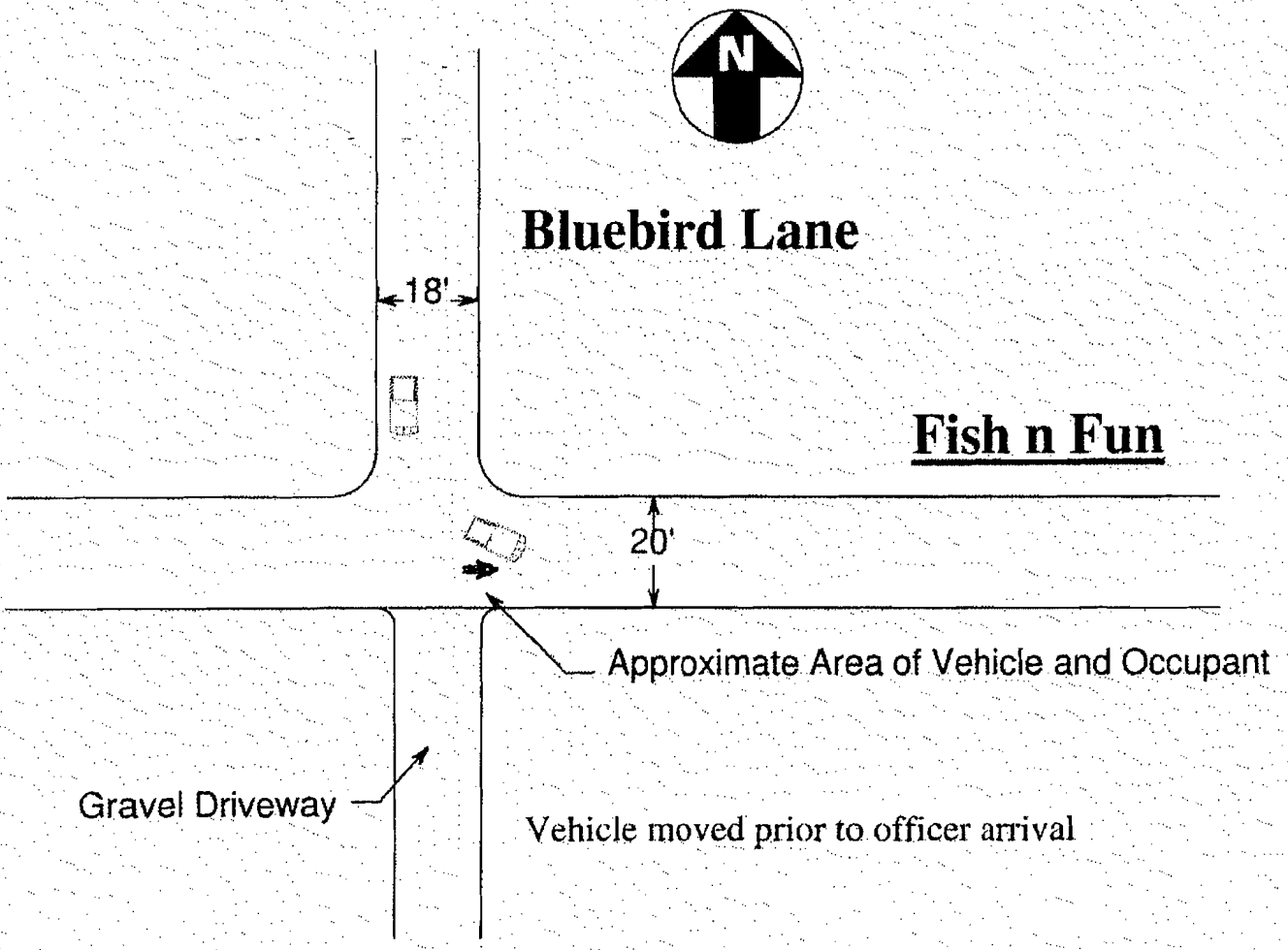

8. EVIDENTIARY PHOTOS TAKEN
☐ YES ☒ NO BY WHOM NA AVAILABLE FROM NA

RECONSTRUCTION - Includes Narrative, Diagram, & Photo(s)
☐ YES ☒ NO BY WHOM NA

9 - CODES

SEAT LOCATION
FR SR TR / FC SC TC / FL SL TL
XX - Not Known
P - Pedestrian
B - Bicycle
M - Motorcycle
OE - Occupant - Enclosed Load Area
OU - Occupant - Unenclosed Load Area
CP - Commercial Passenger
SV - Other (Explain in Remarks)

INJURY
1. Fatal
2. Disabling
3. Evident - Not Disabling
4. Probable - Not Apparent
5. None Apparent
6. Unknown

TRANSPORTED (Medical Treatment)
1. No
2. EMS
3. Other
4. Unknown

EJECTION
1. NA
2. No
3. Partially
4. Totally
5. Unknown

AIR BAG FRONT
1. None / NA
2. Deployed
3. Not Deployed

AIR BAG SIDE
1. None / NA
2. Deployed
3. Not Deployed

SAFETY DEVICES
1. None
2. Not Used
3. Shoulder Belt Only
4. Lap Belt Only
5. Shoulder and Lap Belt
6. Child Restraint
7. Helmet Used
8. Helmet Not Used
9. Use Unknown

10 - DRIVERS

NAME / ADDRESS	DATE OF BIRTH MM-DD-YYYY	SEX	VEH. NO.	SEAT LOC.	INJ.	TRANS-PORT	EJEC-TION	AIR BAG F	AIR BAG S	SAF DEV	TELEPHONE NO.
☐ NA DRIVER 1 - SAME ADDRESS AS ABOVE	07/03/1971	F	1	M	5	1	2	1	1	8	316-259-9821
☒ NA											

11 - OTHER OCCUPANTS & PEDESTRIANS (SAD = SAME AS DRIVER)

[redacted]	M	1	SV	5	1	2	1	1	8	[redacted]
[redacted]	F	1	SV	5	1	2	1	1	8	[redacted]
[redacted]	F	1	SV	2	2	4	1	1	8	[redacted]
NA										
NA										
NA										

080811CWE7665 - Exhibit 2, Copy of Missouri Highway Patrol report. Page 3 of 4.

12. VEHICLE BODY TYPES
AUTOMOBILES / SPECIAL VEHICLES

V1	V2	
☐	☐	1. Passenger Car
☐	☐	2. Station Wagon
☐	☐	3. Sport Utility Vehicle
☐	☐	4. Limousine (6-15 for hire)
☐	☐	5. Van (8 or less with driver)
☐	☐	6. Small Bus (9-15 with driver)
☐	☐	7. Bus (16 or more with driver)
☐	☐	8. School Bus (less than 16 with driver)
☐	☐	9. School Bus (16 or more with driver)
☐	☐	10. Motorcycle — 2 Wh. ☐ ☐ / 3 Wh. ☐ ☐ / 4 Wh. ☐ ☐ / 5 Wh. or More ☐ ☐ / Unknown ☐ ☐
☒	☐	11. ATV
☐	☐	12. Motorized Bicycle
☐	☐	13. Pedalcycle
☐	☐	14. Motor Home / Camper
☐	☐	15. Farm Implements
☐	☐	16. Construction Equipment
☐	☐	17. Other Transport Device
☐	☐	18. Unknown
☐	☐	19. Pick-up
☐	☐	20. Single-unit Truck: 2 axles, 6 tires
☐	☐	21. Single-unit Truck: 3 or more axles
☐	☐	A. Vehicle Pulling Another Unit(s) 1-21 only
☐	☐	22. Truck Tractor With No Units
☐	☐	23. Truck Tractor With One Unit
☐	☐	24. Truck Tractor With Two Units
☐	☐	25. Truck Tractor With Three Units
☐	☐	26. Other Heavy Truck

GCVW Rating (not licensed weight) 19-26 only
☐ ☐ Less than or equal to 10,000 lbs.
☐ ☐ 10,001 - 26,000 lbs.
☐ ☐ Greater than 26,000 lbs.

13. EMERGENCY VEHICLE INVOLVEMENT ☒ NA

V1	V2	
☐	☐	1. Police
☐	☐	2. Fire
☐	☐	3. Ambulance
☐	☐	4. Other (must check "A")
☐	☐	A. Emergency Vehicle on Emergency Run

14. HAZARDOUS MATERIALS ☒ NA

V1	V2	
☐	☐	Placard Displayed
☐	☐	1. Gases in Bulk
☐	☐	2. Solids in Bulk
☐	☐	3. Liquids in Bulk
☐	☐	4. Explosives
☐	☐	5. None
☐	☐	A. Hazardous Materials' Cargo Released / Spilled

15. ACCIDENT TYPE
☒ 1. On Roadway
☐ 2. Off Roadway

COLLISION INVOLVING
☐ 1. Animal
☐ 2. Pedalcycle
☐ 3. Fixed Object
☐ 4. Other Object
☐ 5. Pedestrian
☐ 6. Train
☐ 7. MV in Transport
☐ 8. MV on Other Roadway
☐ 9. Parked MV

NON-COLLISION
☐ 10. Overturning
☒ 11. Other Non-Collision

TWO VEHICLE COLLISION
☐ 60. Head On
☐ 61. Rear End
☐ 62. Sideswipe - Meeting
☐ 63. Sideswipe - Passing
☐ 64. Angle
☐ 65. Backed Into
☐ 67. Other

16. TRAFFIC CONDITIONS

V1	V2	
☒	☐	1. Normal
☐	☐	2. Accident Ahead
☐	☐	3. Congestion Ahead

17. VEHICLE ACTION / SEQUENCE OF EVENTS

1. Going Straight
2. Overtaking
3. Making Right Turn
4. Right Turn on Red
5. Making Left Turn
6. Making U Turn
7. Skidding / Sliding
8. Slowing / Stopping
9. Start in Traffic
10. Start From Parked
11. Backing
12. Stopped in Traffic
13. Parked
14. Changing Lanes
15. Avoiding
16. Crossover Median
17. Crossover Centerline
18. Crossing Road
19. Airborne
20. Ran Off Road - Right
21. Ran Off Road - Left
22. Overturn / Rollover
23. Fire / Explosion
24. Immersion
25. Jackknife
26. Cargo Loss / Shift
27. Equipment Failure
28. Separation of Units
29. Returned to Road
30. Collision Inv. Pedestrian
31. Collision Inv. Pedalcycle
32. Collision Inv. Train
33. Collision Inv. Animal (enter code - explain)
34. Collision Inv. MV in Transport
35. Collision Inv. Parked Motor Vehicle
36. Collision Inv. Fixed Object (enter code - explain)
37. Collision Inv. Other Object (explain)
38. Other - Non Collision

V1 ☐ Unknown
05 | 38 | NA | NA | NA | NA | NA
33. Animal Code NA
36. Fixed Object Code NA NA NA

V2 ☐ Unknown
NA | NA | NA | NA | NA | NA | NA
33. Animal Code NA
36. Fixed Object Code NA NA NA

Animal, Fixed Object, and Inattention Codes explained in narrative.

18. PROBABLE CONTRIBUTING CIRCUMSTANCES

	V1	V2
1. VehicleDefects (explain)	☐	☐
2. Traffic Control Inoperable or Missing	☐	☐
3. Improperly Stopped on Roadway	☐	☐
4. Speed - Exceeded Limit	☐	☐
5. Too Fast for Conditions	☐	☐
6. Improper Passing	☐	☐
7. Violation Signal / Sign	☐	☐
8. Wrong Side (not passing)	☐	☐
9. Following Too Close	☐	☐
10. Improper Signal	☐	☐
11. Improper Backing	☐	☐
12. Improper Turn	☐	☐
13. Improper Lane Usage / Change	☐	☐
14. Wrong Way (One-Way)	☐	☐
15. Improper Start From Park	☐	☐

	P1	P2	
16. Improperly Parked	☐	☐	☐
17. Failed to Yield	☐	☐	☐
18. Alcohol	☐	☐	☒
19. Drugs	☐	☐	☐
20. Physical Impairment (explain)	☐	☐	☐
21. Inattention (explain)	☐	☐	☐
22. None	☐	☐	☐

P1 ____ P2 ____ V1 ____ V2 ____

19. PEDESTRIAN INVOLVEMENT ☒ NA

	P1	P2
1. At Intersection	☐	☐
2. Not At Intersection	☐	☐

CROSSING ROAD

3. With Signal	☐	☐
4. Against Signal	☐	☐
5. No Signal	☐	☐
6. Diagonally	☐	☐
7. Within Crosswalk	☐	☐
8. Within Marked Crosswalk	☐	☐
9. Behind / In Front of Parked Car	☐	☐
10. With Traffic	☐	☐
11. Against Traffic	☐	☐
12. Getting On / Off Vehicle	☐	☐
13. Standing / Lying / Sitting on Road	☐	☐
14. Pushing / Working on Vehicle	☐	☐
15. Other Working	☐	☐
16. Playing on Road	☐	☐
17. Off Roadway	☐	☐

20. VISION OBSCURED

	V1	V2
1. Windshield	☐	☐
2. Load on Vehicle	☐	☐
3. Trees / Brush	☐	☐
4. Building	☐	☐
5. Embankment	☐	☐
6. Signboards	☐	☐
7. Hillcrest	☐	☐
8. Parked Cars	☐	☐
9. Moving Cars	☐	☐
10. Glare	☐	☐
11. Other (explain)	☐	☐
12. Not Obscured	☒	☐

21. TRAFFIC CONTROL

	V1	V2
1. Construction Zone	☐	☐
2. Other Work Zone	☐	☐
3. School Zone	☐	☐
4. Stop Sign	☐	☐
5. Electric Signal	☐	☐
6. RR Signal / Gate	☐	☐
7. Yield Sign	☐	☐
8. Officer / Flagman	☐	☐
9. No Passing Zone	☐	☐
10. Turn Restricted	☐	☐
11. Signal on School Bus	☐	☐
12. None	☒	☐

22. ROAD CHARACTER

ALIGNMENT
- ☒ 1. Straight
- ☐ 2. Curve

PROFILE
- ☒ 1. Level
- ☐ 2. Grade
- ☐ 3. Hillcrest

23. LIGHT CONDITION
- ☐ 1. Daylight
- ☐ 2. Dark with Street Lights On
- ☐ 3. Dark with Street Lights Off
- ☒ 4. Dark - No Street Lights
- ☐ 5. Indeterminate (explain)

24. WEATHER CONDITION
- ☒ 1. Clear
- ☐ 2. Cloudy
- ☐ 3. Rain
- ☐ 4. Snow
- ☐ 5. Sleet
- ☐ 6. Freezing (temp.)
- ☐ 7. Fog / Mist
- ☐ 8. Indeterminate (explain)

25. ROAD CONDITION
- ☒ 1. Dry
- ☐ 2. Wet
- ☐ 3. Snow
- ☐ 4. Ice
- ☐ 5. Slush
- ☐ 6. Mud
- ☐ 7. Standing Water
- ☐ 8. Moving Water
- ☐ 9. Other (explain)

26. ROAD SURFACE
- ☐ 1. Concrete
- ☒ 2. Asphalt
- ☐ 3. Brick
- ☐ 4. Gravel
- ☐ 5. Dirt / Sand
- ☐ 6. Multi-Surface

27 - COMMERCIAL MOTOR VEHICLE (Complete for each commercial vehicle involved.)

A. CMV CRITERIA

Answer the following to determine if this section should be completed.

1. Does this accident involve any of the following:
   1.a person fatally injured; or
   2.a person transported for medical attention; or
   3.a vehicle towed from the scene of the accident
   - ☐ NO - DO NOT COMPLETE
   - ☒ YES - GO TO NUMBER 2
2. Examine each vehicle to determine if it is a commercial vehicle based on the following:
   1.a truck with GCVWR of more than 10,000 lbs. and engaged in commerce; or
   2.a bus or school bus (9 or more including driver); or
   3.a vehicle with a hazardous materials placard
   - ☒ NO - DO NOT COMPLETE
   - ☐ YES - COMPLETE SECTIONS B - E

B. CARRIER ID NUMBER

V1 ICC NO. MC _____ USDOT NO. _____

V2 ICC NO. MC _____ USDOT NO. _____

C. HAZARDOUS MATERIAL PLACARD NUMBER ☐ NA

V1 4-Digit Placard Number from Diamond / Box _____ Number From Bottom of Diamond _____

V2 4-Digit Placard Number from Diamond / Box _____ Number From Bottom of Diamond _____

D. TRAFFICWAY
- ☐ 1. Two-Way; Not Divided
- ☐ 2. Two-Way; Divided; Unprotected Median
- ☐ 3. Two-Way; Divided; Positive Median Barrier
- ☐ 4. One-Way; Not Divided

E. CARGO BODY TYPE

	V1	V2
1. Enclosed Box	☐	☐
2. Cargo Tank	☐	☐
3. Flatbed	☐	☐
4. Dump	☐	☐
5. Concrete Mixer	☐	☐
6. Auto Transporter	☐	☐
7. Garbage / Refuse	☐	☐
8. Grain, Chip, Gravel	☐	☐
9. Pole Trailer	☐	☐
10. Other	☐	☐

28 - NARRATIVE / STATEMENTS (If additional room is necessary, attach a separate sheet.)

This accident occurred as vehicle one was attempting a left turn from Bluebird Lane onto Fish n Fun. Passenger [redacted] was ejected from the vehicle and landed on the pavement.

[redacted] was transported by ambulance to St. John's Hospital in Berryville, Arkansas for treatment of injuries.

The driver of vehicle one said, "We were driving up, what is it Bluebird, and stopped and made a left onto it, maybe a little too fast and she came out the back."

The driver of vehicle one was seated in the front left driver seat. Passenger [redacted] was seated in the front right seat. Passenger [redacted] was standing in the bed area on the left side behind the driver. Passenger [redacted] was standing in the bed area on the right side behind passenger [redacted]

080811CWE7665 - Exhibit 2, Copy of Missouri Highway Patrol report. Page 4 of 4.

29. REPORTING OFFICER SIGNATURE	DSN / BADGE NO.	BEAT / ZONE	TROOP / DIST / PCT
J. T. Vermillion	1207	15	D

REVIEWING OFFICER 1 SIGNATURE	DSN / BADGE NO.	REVIEWING OFFICER 2 SIGNATURE	DSN / BADGE NO.
Sgt. C. A. Stuart	1139		

ST JOHNS HOSPITAL BERRYVILLE 214 CARTER ST BERRYVILLE AR 72616

SUB TYPE	SERVICE	EXPECT DATE
	MEDICAL	8/19/07

EMERGENCY ROOM • OUTPATIENT RECOR

PATIENT NUMBER	TYPE	PATIENT NAME	SEX	M/S	DATE OF SERVICE	TIME	CLINIC ENTY.
424500	3		F	SW	8/19/07	02:52	HR

ADDRESS - LINE 1 | ADDRESS - LINE 2 | CITY | STATE | ZIP CODE | TELEPHONE

PATIENT EMAIL | MOTHER'S MAIDEN NAME | RELATIONSHIP: FRIEND | ADDRESS | TELEPHONE

INSURANCE COMPANY: BLUE CROSS O/P OUT OF STATE | CONTRACT OR GROUP NUMBER | DATE: 8/19/07 | PLACE: OTHER | TIME: 2:00 | EVENT: ATV WRECK

GUARANTOR NAME | GUARANTOR ADDRESS | CITY | STATE | ZIP CODE | GUAR. TELEPHONE

GUARANTOR EMPLOYER | GUARANTOR OCCUPATION | GUAR. EMPLOYER ADDRESS | GUAR. EMP. TELEPHONE

PREV. SERVICE | PREV. SERV. DATE | IF MINOR - PARENT NAME | MED. REC. # | ADMITTING/IND PHYSICIAN: CARD S /

CHARGES	X-RAY	LAB	RESP. TH.	PHY. TH.	EKG	I.V.	DRUGS	SUPPLIES	OTHER	M.D.	E.R. RM	TOTAL DUE

AUTHORIZATION FOR TREATMENT, GUARANTEE OF PAYMENT, ASSIGNMENT OF INSURANCE BENEFITS

The above-named patient was brought to the emergency treatment area and was found necessary for the above named patient, and that treatment and procedures will be performed by physicians, members of house staff and other personnel. Authorization is hereby granted for such treatment and procedures. The undersigned has read the above authorization and understands the terms and conditions that no guarantee or assurance has been made as to the results that may be obtained.

The undersigned agrees to pay for services rendered by hospital upon release of patient.

In consideration of hospital benefits, group benefits, if any, benefits due to a disability of a third party payable on my party, for the above patient, to hospital, agree I pay the amount of the charges not covered by such insurance. I authorize the release of hospital to furnish from its records any information required by the before mentioned insurance companies in connection with the above statement. I further agree that my signature as my lawful assignee to release for me any checks made payable to me for benefits or claims collected under the above assignment and to apply any credit balance to my other account(s) with hospital.

DATE | TIME | SIGNED PATIENT | SIGNED GUARANTOR

CHIEF COMPLAINT (If Accident State How, When, and Where): ATV WRECK

ADVANCED DIRECTIVE

TEMP.	PULSE	RESP.	B/P	ALLERGIES	MEDICATIONS - HOME	E.R. PHYSICIAN	TET. TOX.

NURSES NOTES:

NURSE'S SIGNATURE (RN OR LPN)

LAB DATA (Including X-Rays, EKGs, etc.)

PHYSICIAN'S REPORT

080811CWE7665 - Exhibit 3, Copy of victim's outpatient record. Page 1 of 1.

850.11
920
E812.1
E849.5
401.9
V15.89

DIAGNOSIS:

99231

TREATMENT:

CONDITION ON DISC: IMP | STABLE | EXPIRED

INSTRUCTIONS TO PATIENT:

FOLLOW-UP WITH M.D

8/19/07 0537

PATIENT'S SIGNATURE ON DISCHARGE
BY SIGNING HERE I CERTIFY THAT I UNDERSTAND THE FOLLOW-UP INSTRUCTIONS ARCHIVED BY ME IN WRITING, WHICH WERE EXPLAINED TO ME.

DATE - TIME OF DISC.

PHYSICIAN'S SIGNATURE M.D.

Metropolitan Newsclips Service
P.O. Box 2195 • St. Louis, MO 63130

Branson Daily News
Taney County
Branson MO

9813 Daily
26813 Sunday

August 21, 2007

N0790215A 9/14/07

ISSUE: 50

Two people killed over weekend

By Mindy Honey
BDN Staff Writer
mhoney@bransondailynews.com

Two people were killed and two more injured recently in Stone County.

Table Rock Lake claimed the life of an Ozark woman Saturday night.

Shortly before 9:30 p.m. Brandi Tangora, 24, was swimming approximately six to eight feet from a houseboat that was moored to an island in the James River Arm, Point 10 area in Stone County. When family members discovered Tangora was missing, the began a search for her, but when they could not locate the missing female, they contacted help, according to a report from the Missouri State Water Patrol.

Just before 11 p.m. the victims body was discovered by dragging methods in the same area where she was last seen in a depth of 12-15 feet of water.

Capt. Gary Haupt said it is unclear what happened.

"We don't know what the cause was yet," Haupt said, adding there was nothing suspicious about the drowning. "She didn't indicate she was having problems."

Results of the toxicology report could take several weeks or possibly months, Haupt said.

Earlier on Saturday a man from Republic died after a motorcycle crash near Cape Fair.

Daniel J. Feather, 29, was traveling westbound on Missouri 76 one and a half miles east of Cape Fair on a 2007 Triumph motorcycle when he lost control of the vehicle while negotiating a curve. The motorcycle went off of the roadway and struck a sign just after 2 p.m., a report from the Missouri State Highway Patrol stated.

Feather was transported to Cox South Hospital in Springfield where he died later Saturday afternoon, the report stated.

On Sunday a Wichita, Kan., woman sustained moderate injuries in an early morning ATV incident.

At 1:40 a.m. (b)(3):CPSA Section (b)(3):CPSA Section 25(c),(b)(6) was traveling southbound on Fish-N-Fun Road in Viola on a 2004 Yamaha Rhino ATV. While making a left turn passenger (b)(3):CPSA Section, also of (b)(3):CPSA who was standing in the bed of the vehicle, was ejected, a report from the MSHP stated.

(b)(3):CPSA sustained moderate injuries and was transported by ambulance to St. John's Hospital in Berryville, Ark., the report stated.

An early Monday morning crash has left a Kimberling City man with moderate injuries after crashing into a vehicle parked on the side of the road.

Just before 1 a.m. Allan E. Cedarvall, 48, was traveling southbound on Missouri 13 one mile north of Lampe in a 1981 Buick when the vehicle ran off of the roadway and struck a parked and unoccupied 1994 Ford, a report from the MSHP stated.

Cedarvall sustained moderate injuries and was transported to St. John's Hospital in Springfield, the report stated.

1. Task Number	2. Investigator's ID	EPIDEMIOLOGIC INVESTIGATION REPORT
080811CWE7666	2343	

3. Office Code	4. Date of Accident YR MO DAY	5. Date Initiated YR MO DAY
840	2007 09 22	2008 08 14

6. Synopsis of Accident or Complaint **UPC**

Two occupants of a all terrain vehicle were reportedly injured during a rollover of the vehicle. The driver was ejected and the passenger was wearing a seatbelt. Neither party was wearing a helmet and Injuries to both parties minor. Accident occurred in a pasture area. The police report indicates the driver had consumed alcohol.

MFR/PRVLBR NOTIFIED
COMMENTS: __YES __NO
__OVERRULED; __ATTACHED
EXCISIONS/FOIA EXS. 3, 6
DO NOT RE-NOTIFY __RE-NOTIFY
081119GC

7. Location (Home, School, etc)	8. City	9. State
2 - FARM	MARSHFIELD	MO

10A. First Product	10B. Trade/Brand Name	10C. Model Number
3286 - All Terrain Vehicles (four W	RHINO	660

10D. Manufacturer Name and Address
YAMAHA CORP. OF AMERICA INTERNATIONAL
660 Orangethorpe Ave.
Buena Park, CA 90622

11A. Second Product	11B. Trade/Brand Name	11C. Model Number
0	NONE	NONE

11D. Manufacturer Name and Address
NONE

12. Age of Victim	13. Sex	14. Disposition	15. Injury Diagnosis
54	1 - Male	1 - Injured, not Hosp.	71 - Other

16. Body Part(s) Involved	17. Respondent	18. Type of Investigation	19. Time Spent (Operational / Travel)
85 - ALL OF BODY	1 - Victim/Complainant	2 - Telephone	9 / 0

20. Attachment(s)	21. Case Source	22. Sample Collection Number
2 - Documents	05 - Newspaper	

23. Permission to Disclose Name (Non NEISS Cases Only)

○ Yes ● No ○ Verbal ○ Yes for Manuf. Only

24. Review Date	25. Reviewed By	26. Regional Office Director
09/24/2008	8929	Frank J. Nava

27. Distribution	28. Source Document Number
Streeter, Robin	N07A0378A

IDI 080811CWE7666

NOTE: Information for this report was obtained from third party source (state police report) and telephone interview with passenger of this incident.

The police report stated that on September 22, 2007 at approximately 1:10 a.m. the vehicle that the two victims were riding overturned in a field. The report stated that the driver was ejected from the vehicle and the passenger who was wearing a seatbelt was not ejected. The police report indicated that the driver admitted that he flipped the vehicle, with both the driver and passenger being transported by ambulance to a local hospital after leaving the accident scene to seek help.

Reporting investigator (RI) was unable to interview the driver of the vehicle, but was able to interview the passenger via telephone.

The 54 year old male (YOM) passenger advised RI that the vehicle had originally been used to look for trees to cut down for firewood. The passenger stated that the 55 YOM driver began to drive the vehicle up a sloping hillside, when the driver wanted to demonstrate to the passenger how sharp the vehicle could turn.

The passenger advised RI that as the driver attempted to demonstrate the vehicles turning capabilities that the vehicle made an approximate 180 degree turn and rolled down the grassy slope they were on ejecting the driver over the passenger.

The passenger reiterated that when he got into the vehicle he fastened his seatbelt and the driver didn't do so prior to the accident. The passenger further stated that neither of them was wearing a helmet, and that he believed that driver had ingested some alcohol at some point prior to the accident.

PRODUCT INFORMATION:

Product Type: All Terrain Vehicle

VIN: (b)(3) CPSA Section 25(c),(b)(6)

Model number: Rhino 660

Manufacturer: Yamaha

Retailer: Unknown

Purchase Price: Unknown

Color: Camouflage

Year: 2005

IDI 080811CWE7666

ATTACHMENTS:

Exhibit A – Missouri State Highway Patrol accident report
Exhibit B – Contact list
Exhibit C – Research Form

SHP-580C 10/02

FACSIMILE COVER SHEET

MISSOURI STATE HIGHWAY PATROL
TRAFFIC DIVISION
POST OFFICE BOX 568
JEFFERSON CITY, MISSOURI 65102-0568
(573) 526-6113 (TELEPHONE)
(573) 751-9921 (FAX)

DATE: 08/25/2008 TIME 08:32 PAGE 1 OF 5

FROM: Karen TELEPHONE NO: 573-526-6113

TO: (b)(6)

FACSIMILE NO.: 402-932-4471

COMMENTS:

CONFIDENTIALITY NOTICE:
THE DOCUMENTS ACCOMPANYING THIS TELECOPY TRANSMISSION MAY CONTAIN CONFIDENTIAL INFORMATION BELONGING TO THE SENDER WHICH IS LEGALLY PRIVILEDGED. THE INFORMATION IS INTENDED ONLY FOR THE USE OF THE INDIVIDUAL OR ENTITY RECIPIENT NAMED ABOVE. IF YOU ARE NOT THE INTENDED RECIPIENT, YOU ARE HEREBY NOTIFIED THAT ANY DISCLOSURE, COPYING, DISTRIBUTION, OR THE TAKING OF ANY ACTION IN RELIANCE ON THE CONTENTS OF THIS TELECOPIED INFORMATION IS STRICLTY PROHIBITED. IF YOU HAVE RECEIVED THIS TELECOPY IN ERROR, PLEASE IMMEDIATELY NOTIFY US BY TELEPHONE TO ARRANGE FOR RETURN OF THE ORIGINAL DOCUMENTS TO US.

MISSOURI UNIFORM ACCIDENT REPORT

SPACE DAED FOR BARCODE

1 - AGENCY NAME AND ORI: MISSOURI STATE HIGHWAY PATROL / MOMHPDD00

LEFT THE SCENE	CLEARED	ACCIDENT CLASSIFICATION	PROPERTY DAMAGE ONLY	NUMBER INJURED	NUMBER KILLED	REPORT CASE/INCIDENT NUMBER
☒ YES ☐ NO	☒ YES ☐ NO		☐	2	0	09220700135

NUMBER OF VEHICLES INVOLVED	ACCIDENT DATE	ACCIDENT TIME (MIL)	TIME NOTIFIED (MIL)	TIME ARRIVED (MIL)	INVESTIGATION DATE
1	09/22/2007	0110	0125	NA	09/22/2007

2 - LOCATION

COUNTY	MUNICIPALITY	BEAT / ZONE	TRF. DIST. / PCT.	WITHIN CITY LIMITS AT SCENE
Webster 113	Non-City Or Unincorporated 9999	10	D	☐ YES ☒ NO

ON	DISTANCE FROM	LOCATION	INTERSECTING STREET OR ROADWAY			
PP 2926 Timber Ridge RD	FEET	☐ AFTER ☐ BEFORE ☒ AT	CRD Timber Ridge RD (W)			
ROADWAY DIRECTION	**SPEED LIMIT**	0.5 MILES	**SPEED LIMIT**	**GEO - CODE**	GPS LONGITUDE W	092 57 56.7
NA	NA	NA	NA	NA	LATITUDE N	037 23 03.0

ROAD MAINTAINED BY: ☐ 1. STATE ☐ 2. COUNTY ☐ 3. MUNICIPAL ☒ 4. PRIVATE PROPERTY ☐ 5. OTHER

3 - DAMAGE TO PROPERTY OTHER THAN VEHICLES ☒ NONE

GIVE OWNER'S NAME AND ADDRESS, DESCRIPTION OF PROPERTY, AND DAMAGE.
☐ NONE

DRIVER 1

4. DRIVER'S FULL NAME (LAST, FIRST, MI) | ADDRESS (STREET, CITY, STATE, ZIP)

DRIVER LICENSE NUMBER / ID NUMBER | STATE | TYPE OF LICENSE: ☒ 1. OPERATOR CLASS F ☐ 2. CDL CLASS ☐ 3. PERMIT ☐ 4. UNLICENSED ☐ 5. MC ONLY ☐ UNKNOWN | MC ENDORSEMENT: ☐ YES ☐ NO ☒ NA

PROOF OF INSURANCE: ☐ YES ☐ NO ☒ NOT REQUIRED | INSURANCE COMPANY: None | ☐ DRIVER ☐ VEHICLE | POLICY NUMBER: ☒ NA

VEHICLE 1

YEAR	MAKE	MODEL	COLOR
2005	Yamaha	Rhino 660	Camouflage

LIC. PLATE NO.	STATE	YEAR	VIN	TOTAL NO. OF OCCUPANTS
NA	NA	NA		2

VEHICLE OWNER NAME (LAST, FIRST, MI / COMMERCIAL CARRIER) | ADDRESS (STREET, CITY, STATE, ZIP) ☐ SAME AS DRIVER

VEHICLE DAMAGE TO BE ENTERED ☐ NONE | INITIAL IMPACT NO. ☐ NA 16

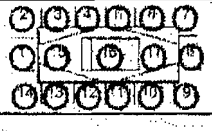

TOWED FROM SCENE: ☐ YES ☒ NO | TOW CO. INFORMATION: NA

DRIVER 2

5. DRIVER'S FULL NAME (LAST, FIRST, MI) | ADDRESS (STREET, CITY, STATE, ZIP)

DRIVERS LICENSE NUMBER / ID NUMBER | STATE | TYPE OF LICENSE: ☐ 1. OPERATOR CLASS ☐ 2. CDL CLASS ☐ 3. PERMIT ☐ 4. UNLICENSED ☐ 5. MC ONLY ☐ UNKNOWN | MC ENDORSEMENT: ☐ YES ☐ NO ☐ NA

PROOF OF INSURANCE: ☐ YES ☐ NO ☐ NOT REQUIRED | INSURANCE COMPANY | ☐ DRIVER ☐ VEHICLE | POLICY NUMBER: ☐ NA

VEHICLE 2

YEAR	MAKE	MODEL	COLOR

LIC. PLATE NO.	STATE	YEAR	VIN	TOTAL NO. OF OCCUPANTS

VEHICLE OWNER NAME (LAST, FIRST, MI / COMMERCIAL CARRIER) | ADDRESS (STREET, CITY, STATE, ZIP) ☐ SAME AS DRIVER

VEHICLE DAMAGE TO BE ENTERED ☐ NONE | INITIAL IMPACT NO. ☐ NA

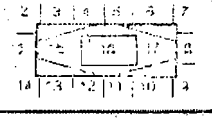

TOWED FROM SCENE: ☐ YES ☐ NO | TOW CO. INFORMATION

6 - WITNESS ☒ NONE IDENTIFIED

NAME OF WITNESS	ADDRESS (STREET, CITY, STATE, ZIP)	TELEPHONE NO.
NA		
NA		
NA		
NA		

REPORT #0220700135 PAGE 2 OF 4

7. COLLISION DIAGRAM	Direction Prior to Impact (Circle one)												Est. Speed - Fatals Only							
	V1	N	E	S	W	V2	N	E	S	W	V3	N	E	S	W	V4	N	E	S	W	V1 NA V2 NA V3 NA V4 NA
	UNK																			

NOT INVESTIGATED AT SCENE

8. EVIDENTIARY PHOTOS TAKEN
☐ YES ☒ NO BY WHOM NA AVAILABLE FROM NA

RECONSTRUCTION - Including Narrative, Diagram, & Photos)
☐ YES ☒ NO BY WHOM NA

REPORT # 092207000135 PAGE 3 OF 4

9 - CODES

SEAT LOCATION
FR SA TR / FC SQ TC / FL SL TL
X - Not Known
P - Pedestrian
B - Bicycle
M - Motorcycle
OE - Occupant - Enclosed Load Area
OU - Occupant - Unenclosed Load Area
OP - Commercial Passenger
SV - Other (Explain in Remarks)

INJURY
1 Fatal
2 Disabling
3 Evident - Not Disabling
4 Probable - Not Apparent
5 None Apparent
6 Unknown

TRANSPORTED (Medical Treatment)
1 No
2 EMS
3 Other
4 Unknown

EJECTION
1 NA
2 No
3 Partially
4 Totally
5 Unknown

AIR BAG FRONT
1 None / NA
2 Deployed
3 Not Deployed

AIR BAG SIDE
1 None / NA
2 Deployed
3 Not Deployed

SAFETY DEVICES
1 None
2 Not Used
3 Shoulder Belt Only
4 Lap Belt Only
5 Shoulder and Lap Belt
6 Child Restraint
7 Helmet Used
8 Helmet Not Used
9 Use Unknown

10 - DRIVERS

NAME / ADDRESS	DATE OF BIRTH MM-DD-YYYY	SEX	VEH. NO.	SEAT LOC.	INJ.	TRANS-PORT	EJEC-TION	AIR BAG F	AIR BAG S	SAF DEV	TELEPHONE NO.
☐ NA DRIVER 1 - SAME ADDRESS AS ABOVE	(b)(3) CPSA Section 25(c),(b)(6)	M	1	M	3	2	4	1	1	8	(b)(3) CPSA Section 25(c),(b)(6)
☒ NA											

11 - OTHER OCCUPANTS & PEDESTRIANS (SAD - SAME AS DRIVER)

(b)(3) CPSA Section 25(c),(b)(6)	M	1	SV	3	2	2	1	1	4	(b)(3) CPSA Section 25(c),(b)(6)
NA										
NA										
NA										
NA										
NA										

12 - VEHICLE BODY TYPES
AUTOMOBILES / SPECIAL VEHICLES

V1 V2
- 1. Passenger Car
- 2. Station Wagon
- 3. Sport Utility Vehicle
- 4. Limousine (6-15 Passengers)
- 5. Van (9 or less with driver)
- 6. Small Bus (9-15 with driver)
- 7. Bus (16 or more with driver)
- 8. School Bus (less than 16 with driver)
- 9. School Bus (16 or more with driver)
- 10. Motorcycle
- 11. ATV
- 12. Motorized Bicycle
- 13. Pedalcycle
- 14. Motor Home / Camper
- 15. Farm Implements
- 16. Construction Equipment
- 17. Other Transport Device
- 18. Unknown
- 19. Pickup
- 20. Single-unit Truck - 2 axles, 6 tires
- 21. Single-unit Truck - 3 or more axles

10: 2 Wh, 3 Wh, ☒ 4 Wh, 5 Wh or More, Unknown

- A. Vehicle Pulling Another Unit (#21 only)
- 22. Truck Tractor With No Units
- 23. Truck Tractor With One Unit
- 24. Truck Tractor With Two Units
- 25. Truck Tractor With Three Units
- 26. Other Heavy Truck

GCVW Rating (put in exact weight) (19-26 only)
- Less than or equal to 10,000 lbs.
- 10,001 - 26,000 lbs
- Greater than 26,000 lbs.

13 - EMERGENCY VEHICLE INVOLVEMENT ☒ NA

V1 V2
- 1. Police
- 2. Fire
- 3. Ambulance
- 4. Other (explain in narrative)
- A. Emergency Vehicle on Emergency Run

14 - HAZARDOUS MATERIALS ☒ NA

V1 V2
- Placard Displayed
- 1. Gases in Bulk
- 2. Solids in Bulk
- 3. Liquids in Bulk
- 4. Explosives
- 5. Flame
- A. Hazardous Materials/ Cargo Released / Spilled

15 - ACCIDENT TYPE

- 1. On Roadway
- ☒ 2. Off Roadway

COLLISION INVOLVING
- Animal
- 2. Pedalcycle
- 3. Fixed Object
- 4. Other Object
- 5. Pedestrian
- 6. Train
- 7. MV in Transport
- 8. MV on Other Roadway
- 9. Parked MV

NON-COLLISION
- ☒ 10. Overturning
- 11. Other Non-Collision

TWO VEHICLE COLLISION
- 00. Head On
- 01. Rear End
- 02. Sideswipe - Meeting
- 03. Sideswipe - Passing
- 04. Angle
- 05. Backed Into
- 07. Other

16 - TRAFFIC CONDITIONS

V1 V2 V1-NA
- 1. Normal
- 2. Accident Ahead
- 3. Congestion Ahead

17 - VEHICLE ACTION / SEQUENCE OF EVENTS

1 Going Straight
2 Overtaking
3 Making Right Turn
4 Right Turn on Red
5 Making Left Turn
6 Making U Turn
7 Skidding / Sliding
8 Slowing / Stopping
9 Start In Traffic
10 Start From Parked
11 Backing
12 Stopped in Traffic
13 Parked
14 Changing Lanes
15 Avoiding
16 Crossover Median
17 Crossover Centerline
18 Crossing Road
19 Airborne
20 Ran Off Road - Right
21 Ran Off Road - Left
22 Overturn / Rollover
23 Fire / Explosion
24 Immersion
25 Jackknife
26 Cargo Loss / Shift
27 Equipment Failure
28 Separation of Units
29 Returned to Road
30 Collision Inv. Pedestrian
31 Collision Inv. Pedalcycle
32 Collision Inv. Train
33 Collision Inv. Animal (enter code - explain)
34 Collision Inv. MV in Transport
35 Collision Inv. Parked Motor Vehicle
36 Collision Inv. Fixed Object (enter code - explain)
37 Collision Inv. Other Object (explain)
38 Other - Non Collision

V1 ☐ Unknown
01 22 NA NA NA NA NA
33. Animal Code NA
35. Fixed Object Code NA NA NA

V2 ☐ Unknown
NA NA NA NA NA NA NA
33. Animal Code NA
35. Fixed Object Code NA NA NA

Animal, Fixed Object, and Inattention Codes explained in narrative.

REPORT # 0922670813S PAGE 1 OF 1

18. VIOLABLE CONTRIBUTING CIRCUMSTANCE

	V1	V2
1. Vehicle Defects (explain)	☐	☐
2. Traffic Control Inoperable or Missing	☐	☐
3. Inattentive / Stopped on Roadway	☐	☐
4. Speed - Exceeded Limit	☐	☐
5. Too Fast for Conditions	☐	☐
6. Improper Passing	☐	☐
7. Violation Signal / Sign	☐	☐
8. Wrong Side (not passing)	☐	☐
9. Following Too Close	☐	☐
10. Improper Signal	☐	☐
11. Improper Backing	☐	☐
12. Improper Turn	☐	☐
13. Improper Lane Usage / Change	☐	☐
14. Wrong Way (One-Way)	☐	☐
15. Improper Start From Park	☐	☐
16. Improperly Parked	☐	☐
17. Failed to Yield	☐	☒
18. Alcohol	☐	☐
19. Drugs	☐	☐
20. Physical Impairment (explain)	☐	☐
21. Inattentive (explain)	☐	☐
22. None	☐	☐

19. PEDESTRIAN INVOLVEMENT ☒ NA

	P1	P2
1. At Intersection	☐	☐
2. Not At Intersection	☐	☐
CROSSING ROAD		
3. With Signal	☐	☐
4. Against Signal	☐	☐
5. No Signal	☐	☐
6. Diagonally	☐	☐
7. Within Crosswalk	☐	☐
8. Within Marked Crosswalk	☐	☐
9. Behind / In Front of Parked Car	☐	☐
10. With Traffic	☐	☐
11. Against Traffic	☐	☐
12. Getting On / Off Vehicle	☐	☐
13. Standing / Lying / Sitting on Road	☐	☐
14. Playing / Working on Vehicle	☐	☐
15. Other Working	☐	☐
16. Playing on Road	☐	☐
17. Off Roadway	☐	☐

20. VISION OBSCURED

	V1	V2
1. Windshield	☐	☐
2. Load on Vehicle	☐	☐
3. Trees / Brush	☐	☐
4. Building	☐	☐
5. Embankment	☐	☐
6. Signboards	☐	☐
7. Hillcrest	☐	☐
8. Parked Cars	☐	☐
9. Moving Cars	☐	☐
10. Glare	☐	☐
11. Other (explain)	☐	☐
12. Not Obscured	☒	☐

21. TRAFFIC CONTROL

	V1	V2
1. Construction Zone	☐	☐
2. Other Work Zone	☐	☐
3. School Zone	☐	☐
4. Stop Sign	☐	☐
5. Electric Signal	☐	☐
6. RR Signal / Gate	☐	☐
7. Yield Sign	☐	☐
8. Officer / Flagman	☐	☐
9. No Passing Zone	☐	☐
10. Turn Restricted	☐	☐
11. Signal on School Bus	☐	☐
12. None	☐	☐

V1-NA

22. ROAD CHARACTER

ALIGNMENT NA
☐ 1. Straight
☐ 2. Curve

PROFILE NA
☐ 1. Level
☐ 2. Grade
☐ 3. Hillcrest

23. LIGHT CONDITION

☐ 1. Daylight
☐ 2. Dark with Street Lights On
☐ 3. Dark with Street Lights Off
☒ 4. Dark - No Street Lights
☐ 5. Indeterminable (explain)

24. WEATHER CONDITION

☒ 1. Clear
☐ 2. Cloudy
☐ 3. Rain
☐ 4. Snow
☐ 5. Sleet
☐ 6. Freezing (temp.)
☐ 7. Fog / Mist
☐ 8. Indeterminate (explain)

25. ROAD CONDITION

☐ 1. Dry
☐ 2. Wet
☐ 3. Snow
☐ 4. Ice NA
☐ 5. Slush
☐ 6. Mud
☐ 7. Standing Water
☐ 8. Moving Water
☐ 9. Other (explain)

26. ROAD SURFACE NA

☐ 1. Concrete ☐ 3. Brick ☐ 5. Dirt / Sand
☐ 2. Asphalt ☐ 4. Gravel ☐ 6. Multi-Surface

27 - COMMERCIAL MOTOR VEHICLE (Complete for each commercial vehicle involved.)

A. CMV CRITERIA

Answer the following to determine if this section should be completed.

1. Does this accident involve any of the following:
   a. a human being injured; or
   b. a person transported for medical attention; or
   c. a vehicle towed from the scene of the accident.
   ☐ NO - DO NOT COMPLETE
   ☒ YES - GO TO NUMBER 2.
2. Is any vehicle in this crash a commercial vehicle based on the following:
   a. a truck with GCWR of more than 10,000 lbs. and engaged in commerce; or
   b. a bus for hire or school bus (9 or more including driver); or
   c. a vehicle with a hazardous materials placard.
   ☒ NO - DO NOT COMPLETE
   ☐ YES - COMPLETE SECTIONS B - E

B. CARRIER ID NUMBER

V1 ICC NO. MC _____ USDOT NO. _____

V2 ICC NO. MC _____ USDOT NO. _____

C. HAZARDOUS MATERIAL PLACARD NUMBER ☐ N/A

V1 4-Digit Placard Number from Diamond Here _____ Number From Bottom of Diamond ___ – ___

V2 4-Digit Placard Number from Diamond Here _____ Number From Bottom of Diamond _____

D. TRAFFICWAY

☐ 1. Two-Way, Not Divided
☐ 2. Two-Way, Divided, Unprotected Median
☐ 3. Two-Way, Divided, Positive Median Barrier
☐ 4. One-Way, Not Divided

E. CARGO BODY TYPE

	V1	V2
1. Enclosed Box	☐	☐
2. Cargo Tank	☐	☐
3. Flatbed	☐	☐
4. Dump	☐	☐
5. Concrete Mixer	☐	☐
6. Auto Transporter	☐	☐
7. Garbage / Refuse	☐	☐
8. Grain, Chip, Gravel	☐	☐
9. Pole Trailer	☐	☐
10. Other	☐	☐

28 - NARRATIVE / STATEMENTS (If additional room is necessary, attach a separate sheet.)

This accident occurred as vehicle #1 overturned in a field at 2926 Timber Ridge Road in Webster County, Missouri. Driver #1 was totally ejected from the driver's seat. Vehicle #1's passenger was wearing a lap belt and was not ejected. Both the driver and passenger left the accident scene to seek help.

Driver #1 stated he flipped the ATV.

Both vehicle #1's driver and passenger were transported by ambulance to Cox South Hospital in Springfield, Missouri.

29. REPORTING OFFICER'S SIGNATURE	DSN / BADGE NO.	DUTY ZONE	TROOP / DIST / PDT
Robert W. Schafer	695	10	D
REVIEWING OFFICER 1 SIGNATURE	**DSN / BADGE NO.**	**REVIEWING OFFICER 2 SIGNATURE**	**DSN / BADGE NO.**
Sgt Raetz	849		

IDI 080811CWE7666

Contact Information

(b)(3):CPSA Section 25(c),(b)(6)

Victim #2 / respondent

(b)(3):CPSA Section 25(c),(b)(6)

(Contacted: 9/3/2008)

(b)(3):CPSA Section 25(c),(b)(6)

Victim # 1 / driver

(b)(3):CPSA Section 25(c),(b)(6)

(Contacted: NA)

State Trooper Robert W. Schafer - Reporting officer
Missouri State Highway Patrol -Troop D
P.O. Box 568
Jefferson City, MO 65102-0568
573-751-9921
(Contacted: NA)

Metropolitan Newsclips Service ISSUE: 04
P.O. Box 3195 • St. Louis, MO 63130

Marshfield Mail
Webster County
Marshfield MO

5440 Weekly
17440 Sunday

September 26, 2007

Two injured when ATV overturns

Two Marshfield men were injured in an all-terrain vehicle crash early Saturday morning.

According to a preliminary report from the Missouri State Highway Patrol, the crash occurred a little after 1 a.m. on private property off Timber Ridge Road, three miles north of Marshfield.

(b)(3):CPSA Section was reportedly driving a 2005 Yamaha Rhino ATV, with (b)(3):CPSA Section as a passenger when the ATV overturned in a field.

The MSHP report stated neither man was wearing a helmet and the ATV operator did not have insurance.

Both (b)(3):CPSA Section suffered moderate injuries and were taken to Cox South Hospital in Springfield.

1. Task Number	2. Investigator's ID	EPIDEMIOLOGIC INVESTIGATION REPORT
080811CWE7666	2343	

3. Office Code	4. Date of Accident YR MO DAY	5. Date Initiated YR MO DAY
840	2007 09 22	2008 08 14

6. Synopsis of Accident or Complaint **UPC**

Two occupants of a all terrain vehicle were reportedly injured during a rollover of the vehicle. The driver was ejected and the passenger was wearing a seatbelt. Neither party was wearing a helmet and injuries to both parties minor. Accident occurred in a pasture area. The police report indicates the driver had consumed alcohol.

MFR/PRVLBR NOTIFIED
COMMENTS: __YES __NO
__OVERRULED; __ATTACHED
EXCISIONS/FOIA EXS. 3, 6
DO NOT RE-NOTIFY __RE-NOTIFY
081190

7. Location (Home, School, etc)	8. City	9. State
2 - FARM	MARSHFIELD	MO

10A. First Product	10B. Trade/Brand Name	10C. Model Number
3286 - All Terrain Vehicles (four W	RHINO	660

10D. Manufacturer Name and Address
YAMAHA CORP. OF AMERICA INTERNATIONAL
660 Orangethorpe Ave.
Buena Park, CA 90622

11A. Second Product	11B. Trade/Brand Name	11C. Model Number
0	NONE	NONE

11D. Manufacturer Name and Address
NONE

12. Age of Victim	13. Sex	14. Disposition	15. Injury Diagnosis
54	1 - Male	1 - Injured, not Hosp.	71 - Other

16. Body Part(s) Involved	17. Respondent	18. Type of Investigation	19. Time Spent (Operational / Travel)
85 - ALL OF BODY	1 - Victim/Complainant	2 - Telephone	9 / 0

20. Attachment(s)	21. Case Source	22. Sample Collection Number
2 - Documents	05 - Newspaper	

23. Permission to Disclose Name (Non NEISS Cases Only)

○ Yes ● No ○ Verbal ○ Yes for Manuf. Only

24. Review Date	25. Reviewed By	26. Regional Office Director
09/24/2008	8929	Frank J. Nava

27. Distribution	28. Source Document Number
Streeter, Robin	N07A0378A

IDI 080811CWE7666

NOTE: Information for this report was obtained from third party source (state police report) and telephone interview with passenger of this incident.

The police report stated that on September 22, 2007 at approximately 1:10 a.m. the vehicle that the two victims were riding overturned in a field. The report stated that the driver was ejected from the vehicle and the passenger who was wearing a seatbelt was not ejected. The police report indicated that the driver admitted that he flipped the vehicle, with both the driver and passenger being transported by ambulance to a local hospital after leaving the accident scene to seek help.

Reporting investigator (RI) was unable to interview the driver of the vehicle, but was able to interview the passenger via telephone.

The 54 year old male (YOM) passenger advised RI that the vehicle had originally been used to look for trees to cut down for firewood. The passenger stated that the 55 YOM driver began to drive the vehicle up a sloping hillside, when the driver wanted to demonstrate to the passenger how sharp the vehicle could turn.

The passenger advised RI that as the driver attempted to demonstrate the vehicles turning capabilities that the vehicle made an approximate 180 degree turn and rolled down the grassy slope they were on ejecting the driver over the passenger.

The passenger reiterated that when he got into the vehicle he fastened his seatbelt and the driver didn't do so prior to the accident. The passenger further stated that neither of them was wearing a helmet, and that he believed that driver had ingested some alcohol at some point prior to the accident.

PRODUCT INFORMATION:

Product Type: All Terrain Vehicle

VIN: (b)(3) CPSA Section 25(c),(b)(6)

Model number: Rhino 660

Manufacturer: Yamaha

Retailer: Unknown

Purchase Price: Unknown

Color: Camouflage

Year: 2005

IDI 080811CWE7666

ATTACHMENTS:

Exhibit A – Missouri State Highway Patrol accident report
Exhibit B – Contact list
Exhibit C – Research Form

SHP-580C 10/02

FACSIMILE COVER SHEET

MISSOURI STATE HIGHWAY PATROL
TRAFFIC DIVISION
POST OFFICE BOX 568
JEFFERSON CITY, MISSOURI 65102-0568
(573) 526-6113 (TELEPHONE)
(573) 751-9921 (FAX)

DATE: 08/25/2008 TIME 08:32 PAGE 1 OF 5

FROM: Karen TELEPHONE NO: 573-526-6113

TO: (b)(6)

FACSIMILE NO.: 402-932-4471

COMMENTS:

CONFIDENTIALITY NOTICE:
THE DOCUMENTS ACCOMPANYING THIS TELECOPY TRANSMISSION MAY CONTAIN CONFIDENTIAL INFORMATION BELONGING TO THE SENDER WHICH IS LEGALLY PRIVILEDGED. THE INFORMATION IS INTENDED ONLY FOR THE USE OF THE INDIVIDUAL OR ENTITY RECIPIENT NAMED ABOVE. IF YOU ARE NOT THE INTENDED RECIPIENT, YOU ARE HEREBY NOTIFIED THAT ANY DISCLOSURE, COPYING, DISTRIBUTION, OR THE TAKING OF ANY ACTION IN RELIANCE ON THE CONTENTS OF THIS TELECOPIED INFORMATION IS STRICLTY PROHIBITED. IF YOU HAVE RECEIVED THIS TELECOPY IN ERROR, PLEASE IMMEDIATELY NOTIFY US BY TELEPHONE TO ARRANGE FOR RETURN OF THE ORIGINAL DOCUMENTS TO US.

MISSOURI UNIFORM ACCIDENT REPORT

SPACE RESERVED FOR BARCODE

1 - AGENCY NAME AND ORI: MISSOURI STATE HIGHWAY PATROL / MOMHPDD00

LEFT THE SCENE	CLEARED	ACCIDENT CLASSIFICATION	PROPERTY DAMAGE ONLY	NUMBER INJURED	NUMBER KILLED	REPORT/CASE/INCIDENT NUMBER
☒ YES ☐ NO	☒ YES ☐ NO		☐	2	0	09220700135

NUMBER OF VEHICLES INVOLVED	ACCIDENT DATE	ACCIDENT TIME (MIL)	TIME NOTIFIED (MIL)	TIME ARRIVED (MIL)	INVESTIGATION DATE
1	09/22/2007	0110	0125	NA	09/22/2007

2 - LOCATION

COUNTY	MUNICIPALITY	BEAT / ZONE	TRF. DIST./ POST	INVESTIGATED AT SCENE
Webster 113	Non-City Or Unincorporated 9999	10	D	☐ YES ☒ NO

ON	DISTANCE FROM	LOCATION	INTERSECTING / FEET OR ROADWAY
PP 2926 Timber Ridge RD	____ FEET 0.5 MILES	☐ AFTER ☐ BEFORE ☒ NA	CRD Timber Ridge RD (W)

ROADWAY DIRECTION	SPEED LIMIT	SPEED LIMIT	GEO - CODE	GPS
NA	NA	NA	NA	LONGITUDE W 092 57 56.7

ROAD MAINTAINED BY: ☐ 1. STATE ☐ 2. COUNTY ☐ 3. MUNICIPAL ☒ 4. PRIVATE PROPERTY ☐ 5. OTHER — LATITUDE N 037 23 03.0

3 - DAMAGE TO PROPERTY OTHER THAN VEHICLES ☒ NONE

GIVE OWNER'S NAME AND ADDRESS, DESCRIPTION OF PROPERTY, AND DAMAGE.
☐ MoDOT

DRIVER 1

4. DRIVER'S FULL NAME (LAST, FIRST, MI) [redacted] — ADDRESS (STREET, CITY, STATE, ZIP)

DRIVER LICENSE NUMBER / ID NUMBER	STATE	TYPE OF LICENSE	MC ENDORSEMENT
[redacted]		☒ 1. OPERATOR CLASS F ☐ 2. CDL CLASS ☐ 3. PERMIT ☐ 4. UNLICENSED ☐ 5. MC ONLY ☐ UNKNOWN	☐ YES ☐ NO ☒ NA

PROOF OF FINANCIAL RESPONSIBILITY	INSURANCE COMPANY		POLICY NUMBER
☐ YES ☐ NO ☒ NOT REQUIRED	None	☐ DRIVER ☐ VEHICLE	☒ NA

VEHICLE 1

YEAR	MAKE	MODEL	COLOR
2005	Yamaha	Rhino 660	Camouflage

LIC. PLATE NO.	STATE	YEAR	VIN	TOTAL NO. OF OCCUPANTS
NA	NA	NA	[redacted]	2

VEHICLE OWNER NAME (LAST, FIRST, MI) / COMMERCIAL CARRIER — ADDRESS (STREET, CITY, STATE, ZIP) ☐ SAME AS DRIVER
[redacted]

VEHICLE DAMAGE AREA(S) ☐ NONE ☐ NA — UNDERCARRIAGE ☐ NA — 16

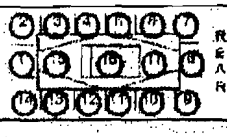

TOWED FROM SCENE ☐ YES ☒ NO — TOW CO. INFORMATION: NA

DRIVER 2

5. DRIVER'S FULL NAME (LAST, FIRST, MI) — ADDRESS (STREET, CITY, STATE, ZIP)

DRIVERS LICENSE NUMBER / ID NUMBER	STATE	TYPE OF LICENSE	MC ENDORSEMENT
		☐ 1. OPERATOR CLASS ____ ☐ 2. CDL CLASS ☐ 3. PERMIT ☐ 4. UNLICENSED ☐ 5. MC ONLY ☐ UNKNOWN	☐ YES ☐ NO ☐ NA

PROOF OF FINANCIAL RESPONSIBILITY	INSURANCE COMPANY		POLICY NUMBER
☐ YES ☐ NO ☐ NOT REQUIRED		☐ DRIVER ☐ VEHICLE	☐ NA

VEHICLE 2

YEAR	MAKE	MODEL	COLOR

LIC. PLATE NO.	STATE	YEAR	VIN	TOTAL NO. OF OCCUPANTS

VEHICLE OWNER NAME (LAST, FIRST, MI) / COMMERCIAL CARRIER — ADDRESS (STREET, CITY, STATE, ZIP) ☐ SAME AS DRIVER

VEHICLE DAMAGE AREA(S) ☐ NONE ☐ NA — UNDERCARRIAGE

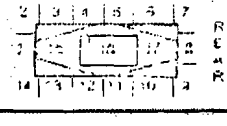

TOWED FROM SCENE ☐ YES ☐ NO — TOW CO. INFORMATION

6 - WITNESS ☒ NONE IDENTIFIED

NAME OF WITNESS	ADDRESS (STREET, CITY, STATE, ZIP)	TELEPHONE NO.
NA		
NA		
NA		
NA		

REPORT #09220700135 PAGE 2 OF 4

7. COLLISION DIAGRAM	Direction Prior to Impact (Circle one)	V1 N E S W UNK	V2 N E S W	V3 N E S W	V4 N E S W	Est. Speed - Fatals Only V1 NA V2 NA V3 NA V4 NA

NOT INVESTIGATED AT SCENE

8. EVIDENTIARY PHOTOS TAKEN
☐ YES ☒ NO BY WHOM NA AVAILABLE FROM NA

RECONSTRUCTION - Includes Narrative, Diagram, & Photos)
☐ YES ☒ NO BY WHOM NA

REPORT #092207100135 PAGE 3 OF 4

9 - CODES

SEAT LOCATION	INJURY	TRANSPORTED (Medical Treatment)	EJECTION	AIR BAG FRONT	AIR BAG SIDE	SAFETY DEVICES
NA - Not Known F - Pedestrian B - Bicycle M - Motorcycle OE - Occupant - Enclosed Load Area OU - Occupant - Unenclosed Load Area CP - Commercial Passenger SV - Other (Explain in Narrative) FR SR TR / FC SC TC / FL SL TL	1. Fatal 2. Disabling 3. Evident - Not Disabling 4. Possible - Not Apparent 5. None Apparent 6. Unknown	1. No 2. EMS 3. Other 4. Unknown	1. NA 2. No 3. Partially 4. Totally 5. Unknown	1. None - NA 2. Deployed 3. Not Deployed	1. None - NA 2. Deployed 3. Not Deployed	1. None 2. Not Used 3. Shoulder Belt Only 4. Lap Belt Only 5. Shoulder and Lap Belt 6. Child Restraint 7. Helmet Used 8. Helmet Not Used 9. Use Unknown

10 - DRIVERS

NAME / ADDRESS	DATE OF BIRTH MM-DD-YYYY	SEX	VEH. NO.	SEAT LOC.	INJ.	TRANS-PORT	EJEC-TION	AIR BAG F	AIR BAG S	SAF DEV	TELEPHONE NO.
☐ NA DRIVER 1 - SAME ADDRESS AS ABOVE	(b)(3):CPSA Section 25(c),(b)(6)	M	1	M	3	2	4	1	1	8	(b)(3):CPSA Section 25(c),(b)(6)
☒ NA											

11 - OTHER OCCUPANTS & PEDESTRIANS (SAD - SAME AS DRIVER)

NAME / ADDRESS										
(b)(3):CPSA Section 25(c),(b)(6)	M	1	SV	3	2	2	1	1	4	(b)(3):CPSA Section 25(c),(b)(6)
NA										
NA										
NA										
NA										

12 - VEHICLE BODY TYPES / AUTOMOBILES / SPECIAL VEHICLES

V1 V2

- ☐ ☐ 1. Passenger Car
- ☐ ☐ 2. Station Wagon
- ☐ ☐ 3. Sport Utility Vehicle
- ☐ ☐ 4. Limousine (8-15 passengers)
- ☐ ☐ 5. Van (9 or less with driver)
- ☐ ☐ 6. Small Bus (9-15 with driver)
- ☐ ☐ 7. Bus (16 or more with driver)
- ☐ ☐ 8. School Bus (less than 16 with driver)
- ☐ ☐ 9. School Bus (16 or more with driver)
- ☐ ☐ 10. Motorcycle
- ☒ ☐ 11. ATV
- ☐ ☐ 12. Motorized Bicycle
- ☐ ☐ 13. Pedalcycle
- ☐ ☐ 14. Motor Home / Camper
- ☐ ☐ 15. Farm Implements
- ☐ ☐ 16. Construction Equipment
- ☐ ☐ 17. Other Transport Device
- ☐ ☐ 18. Unknown
- ☐ ☐ 19. Pickup
- ☐ ☐ 20. Single-unit Truck - 2 axles - 6 tires
- ☐ ☐ 21. Single-unit Truck - 3 or more axles
- ☐ ☐ A. Vehicle Towing Another Unit (#21 only)
- ☐ ☐ 22. Truck Tractor With No Units
- ☐ ☐ 23. Truck Tractor With One Unit
- ☐ ☐ 24. Truck Tractor With Two Units
- ☐ ☐ 25. Truck Tractor With Three Units
- ☐ ☐ 26. Other Heavy Truck

2 Wh.	3 Wh.	4 Wh.	5 Wh. or More	Unknown
☐	☐	☒	☐	☐

GVWR Rating (not to be entered for weight) (19-26 only)

- ☐ Less than or equal to 10,000 lbs.
- ☐ 10,001 - 26,000 lbs.
- ☐ Greater than 26,000 lbs.

13 - EMERGENCY VEHICLE INVOLVEMENT

V1 V2 ☒ NA

- ☐ ☐ 1. Police
- ☐ ☐ 2. Fire
- ☐ ☐ 3. Ambulance
- ☐ ☐ 4. Other (must check "A")
- ☐ ☐ A. Emergency Vehicle on Emergency Run

14 - HAZARDOUS MATERIALS ☒ NA

V1 V2

- ☐ ☐ Placard Displayed
- ☐ ☐ 1. Gases in Bulk
- ☐ ☐ 2. Solids in Bulk
- ☐ ☐ 3. Liquids in Bulk
- ☐ ☐ 4. Explosives
- ☐ ☐ 5. None
- ☐ ☐ A. Hazardous Materials/ Cargo Released / Spilled

15 - ACCIDENT TYPES

- ☐ 1. On Roadway
- ☒ 2. Off Roadway

COLLISION INVOLVING

- ☐ Animal
- ☐ 2. Pedalcycle
- ☐ 3. Fixed Object
- ☐ 4. Other Object
- ☐ 5. Pedestrian
- ☐ 6. Train
- ☐ 7. MV in Transport
- ☐ 8. MV on Other Roadway
- ☐ 9. Parked MV

NON-COLLISION

- ☒ 10. Overturning
- ☐ 11. Other Non-Collision

TWO VEHICLE COLLISION

- ☐ 00. Head On
- ☐ 01. Rear End
- ☐ 02. Sideswipe - Moving
- ☐ 03. Sideswipe - Passing
- ☐ 04. Angle
- ☐ 05. Backed Into
- ☐ 07. Other

16 - TRAFFIC CONDITIONS

V1 V2 V1-NA

- ☐ ☐ 1. Normal
- ☐ ☐ 2. Accident Ahead
- ☐ ☐ 3. Congestion Ahead

17 - VEHICLE ACTION / SEQUENCE OF EVENTS

1 Going Straight
2 Overtaking
3 Making Right Turn
4 Right Turn on Red
5 Making Left Turn
6 Making U Turn
7 Skidding / Sliding
8 Slowing / Stopping
9 Start in Traffic
10 Start From Parked
11 Backing
12 Stopped in Traffic
13 Parked
14 Changing Lanes
15 Avoiding
16 Crossover Median
17 Crossover Centerline
18 Crossing Road
19 Airborne
20 Run Off Road - Right
21 Run Off Road - Left
22 Overturn / Rollover
23 Fire / Explosion
24 Immersion
25 Jackknife
26 Cargo Loss / Shift
27 Equipment Failure
28 Separation of Units
29 Returned to Road
30 Collision Inv. Pedestrian
31 Collision Inv. Pedalcycle
32 Collision Inv. Train
33 Collision Inv. Animal (enter code - explain)
34 Collision Inv. MV in Transport
35 Collision Inv. Parked Motor Vehicle
36 Collision Inv. Fixed Object (enter code - explain)
37 Collision Inv. Other Object (explain)
38 Other - Non Collision

V1 ☐ Unknown

01 22 NA NA NA NA NA

33. Animal Code NA

36 Fixed Object Code NA NA NA

V2 ☐ Unknown

NA NA NA NA NA NA NA

33 Animal Code NA

36 Fixed Object Code NA NA NA

Animal, Fixed Object, and Inattention Codes explained in narrative.

REPORT # 09220708135 PAGE 1 OF 1

18. UNSAFE CONDITIONS/CIRCUMSTANCES

	V1	V2
1. Vehicle/Defects (explain)	☐	☐
2. Traffic Control Inoperable or Missing	☐	☐
3. Inadvertently Stopped on Roadway	☐	☐
4. Speed - Exceeded Limit	☐	☐
5. Too Fast for Conditions	☐	☐
6. Improper Passing	☐	☐
7. Violation Signal / Sign	☐	☐
8. Wrong Side (not passing)	☐	☐
9. Following Too Close	☐	☐
10. Improper Signal	☐	☐
11. Improper Backing	☐	☐
12. Improper Turn	☐	☐
13. Improper Lane Usage / Change	☐	☐
14. Wrong Way (One-Way)	☐	☐
15. Improper Start From Park.	☐	☐
16. Improperly Parked	☐	☐
17. Failed to Yield	☐	☐
18. Alcohol	☒	☐
19. Drugs	☐	☐
20. Physical Impairment (explain)	☐	☐
21. Inattention (explain)	☐	☐
22. None	☐	☐

19. PEDESTRIAN INVOLVEMENT ☒ NA

	P1	P2
1. At Intersection	☐	☐
2. Not At Intersection	☐	☐
CROSSING ROAD		
3. With Signal	☐	☐
4. Against Signal	☐	☐
5. No Signal	☐	☐
6. Diagonally	☐	☐
7. Within Crosswalk	☐	☐
8. Within Marked Crosswalk	☐	☐
9. Behind / In Front of Parked Car	☐	☐
10. With Traffic	☐	☐
11. Against Traffic	☐	☐
12. Getting On / Off Vehicle	☐	☐
13. Standing / Lying / Sitting on Road	☐	☐
14. Playing / Working on Vehicle	☐	☐
15. Other Working	☐	☐
16. Playing on Road	☐	☐
17. Off Roadway	☐	☐

20. VISION OBSCURED

	V1	V2
1. Windshield	☐	☐
2. Load on Vehicle	☐	☐
3. Trees / Brush	☐	☐
4. Building	☐	☐
5. Embankment	☐	☐
6. Signboards	☐	☐
7. Hillcrest	☐	☐
8. Parked Cars	☐	☐
9. Moving Cars	☐	☐
10. Glare	☐	☐
11. Other (explain)	☐	☐
12. Not Obscured	☒	☐

21. TRAFFIC CONTROL(S)

	V1	V2
	V1-NA	
1. Construction Zone	☐	☐
2. Other Work Zone	☐	☐
3. School Zone	☐	☐
4. Stop Sign	☐	☐
5. Electric Signal	☐	☐
6. RR Signal / Gate	☐	☐
7. Yield Sign	☐	☐
8. Officer / Flagman	☐	☐
9. No Passing Zone	☐	☐
10. Turn Restricted	☐	☐
11. Signal on School Bus	☐	☐
12. None	☐	☐

22. ROAD CHARACTER

ALIGNMENT NA
☐ 1. Straight
☐ 2. Curve

PROFILE NA
☐ 1. Level
☐ 2. Grade
☐ 3. Hillcrest

23. LIGHT CONDITION

☐ 1. Daylight
☐ 2. Dark with Street Lights On
☐ 3. Dark with Street Lights Off
☒ 4. Dark - No Street Lights
☐ 5. Indeterminable (explain)

24. WEATHER CONDITION

☒ 1. Clear
☐ 2. Cloudy
☐ 3. Rain
☐ 4. Snow
☐ 5. Sleet
☐ 6. Freezing (temp.)
☐ 7. Fog / Mist
☐ 9. Indeterminate (explain)

25. ROAD CONDITION

☐ 1. Dry
☐ 2. Wet
☐ 3. Snow
☐ 4. Ice NA
☐ 5. Slush
☐ 6. Mud
☐ 7. Standing Water
☐ 8. Moving Water
☐ 9. Other (explain)

26. ROAD SURFACE NA

☐ 1. Concrete ☐ 2. Asphalt ☐ 3. Brick ☐ 4. Gravel ☐ 5. Dirt / Sand ☐ 6. Multi-Surface

27 - COMMERCIAL MOTOR VEHICLE (Complete for each commercial vehicle involved.)

A. CMV CRITERIA

Answer the following to determine if this section should be completed.

1. Does this accident involve any of the following:
   1. a motorist fatally injured; or
   2. a person transported for medical attention; or
   3. a vehicle towed from the scene of the accident
   ☐ NO - DO NOT COMPLETE
   ☒ YES - GO TO NUMBER 2
2. Did any vehicle in question have a commercial vehicle towed on the following:
   1. a truck with GCWR or more than 10,000 lbs. and engaged in commerce; or
   2. a bus designed to seat more than 15 persons (including driver); or
   3. a vehicle with a hazardous materials placard
   ☒ NO - DO NOT COMPLETE
   ☐ YES - COMPLETE SECTIONS B - E

B. CARRIER ID NUMBER

V1 ICC NO. MC _____ USDOT NO. _____

V2 ICC NO. MC _____ USDOT NO. _____

C. HAZARDOUS MATERIAL PLACARD NUMBER ☐ NA

V1 4-Digit Placard Number from Diamond / Box _____ Number From Bottom of Diamond _____

V2 4-Digit Placard Number from Diamond / Box _____ Number From Bottom of Diamond _____

D. TRAFFICWAY

☐ 1. Two-Way, Not Divided
☐ 2. Two-Way, Divided, Unprotected Median
☐ 3. Two-Way, Divided, Positive Median Barrier
☐ 4. One-Way, Not Divided

E. CARGO BODY TYPE

	V1	V2
1. Enclosed Box	☐	☐
2. Cargo Tank	☐	☐
3. Flatbed	☐	☐
4. Dump	☐	☐
5. Concrete Mixer	☐	☐
6. Auto Transporter	☐	☐
7. Garbage / Refuse	☐	☐
8. Grain, Chip, Gravel	☐	☐
9. Pole Trailer	☐	☐
10. Other	☐	☐

28 - NARRATIVE / STATEMENTS (If additional room is necessary, attach a separate sheet.)

This accident occurred as vehicle #1 overturned in a field at 2926 Timber Ridge Road in Webster County, Missouri. Driver #1 was totally ejected from the driver's seat. Vehicle #1's passenger was wearing a lap belt and was not ejected. Both the driver and passenger left the accident scene to seek help.

Driver #1 stated he flipped the ATV.

Both vehicle #1's driver and passenger were transported by ambulance to Cox South Hospital in Springfield, Missouri.

29. REPORTING OFFICER SIGNATURE	DSN / BADGE NO.	FIELD ZONE	TROOP / DIST / HQ
Robert W. Schafer	695	10	D

REVIEWING OFFICER 1 SIGNATURE	DSN / BADGE NO.	REVIEWING OFFICER 2 SIGNATURE	DSN / BADGE NO.
Sgt. Raetz	849		

IDI 080811CWE7666

Contact Information

(b)(3):CPSA Section 25(c),(b)(6)

Victim #2 / respondent

(b)(3):CPSA Section 25(c),(b)(6)

(Contacted: 9/3/2008)

(b)(3):CPSA Section 25(c),(b)(6)

Victim # 1 / driver

(b)(3):CPSA Section 25(c),(b)(6)

(Contacted: NA)

State Trooper Robert W. Schafer - Reporting officer
Missouri State Highway Patrol -Troop D
P.O. Box 568
Jefferson City, MO 65102-0568
573-751-9921
(Contacted: NA)

Metropolitan Newsclips Service ISSUE: 04
P.O. Box 3195 • St. Louis MO 63130

Marshfield Mail
Webster County
Marshfield MO

5440 Weekly
17440 Sunday

September 26, 2007

Two injured when ATV overturns

Two Marshfield men were injured in an all-terrain vehicle crash early Saturday morning.

According to a preliminary report from the Missouri State Highway Patrol, the crash occurred a little after 1 a.m. on private property off Timber Ridge Road, three miles north of Marshfield.

(b)(3):CPSA Section was reportedly driving a 2005 Yamaha Rhino ATV, with (b)(3):CPSA Section as a passenger when the ATV overturned in a field.

The MSHP report stated neither man was wearing a helmet and the ATV operator did not have insurance.

Both (b)(3):CPSA Section suffered moderate injuries and were taken to Cox South Hospital in Springfield.

1. Task Number		2. Investigator's ID	EPIDEMIOLOGIC INVESTIGATION REPORT
C80811CWE7667		9080	
3. Office Code	**4. Date of Accident** YR MO DAY	**5. Date Initiated** YR MO DAY	
840	2008 03 15	2008 09 02	

6. Synopsis of Accident or Complaint **UPC**

A 45 year old female severely injured her right ankle. The victim was a passenger on an ATV that rolled over and landed on her right leg/ankle. The driver, victim and other passenger were involved in the incident and alcohol was a factor. None of the riders were wearing a helmet. The victim was wearing a seatbelt.

MFR/PRVLBR NOTIFIED
COMMENTS: __YES /__NO
__OVERRULED; __ATTACHED
__EXCISIONS/FOIA EXS. ____;
/DO NOT RE-NOTIFY __RE-NOTIFY
081119 CO

7. Location (Home, School, etc)	8. City	9. State
5 - OTHER PUBLIC PROPERTY	ALTO	TX

10A. First Product	10B. Trade/Brand Name	10C. Model Number
3286 - All Terrain Vehicles (four W	YAMAHA	RHINO

10D. Manufacturer Name and Address
YAMAHA MOTOR CORPORATION, USA
6555 Katella Avenue
Cypress, CA 90630

11A. Second Product	11B. Trade/Brand Name	11C. Model Number
0	NONE	NONE

11D. Manufacturer Name and Address
NONE

12. Age of Victim	13. Sex	14. Disposition	15. Injury Diagnosis
45	2 - Female	4 - Hospitalized	57 - Fracture

16. Body Part(s) Involved	17. Respondent	18. Type of Investigation	19. Time Spent (Operational / Travel)
37 - ANKLE	1 - Victim/Complainant	1 - On-Site	15 / 2

20. Attachment(s)	21. Case Source	22. Sample Collection Number
2 - Documents	07 - Consumer Complaint	

23. Permission to Disclose Name (Non NEISS Cases Only)

● Yes ○ No ○ Verbal ○ Yes for Manuf. Only

24. Review Date	25. Reviewed By	26. Regional Office Director
09/24/2008	8631	Frank J. Nava

27. Distribution	28. Source Document Number
Streeter, Robin	I0840189A

Information contained in this report originated from an Internet consumer complaint. Additional information came from an in person interview with the victim. The victim is a 45-year-old female who lives in a single family home with her husband and their three children. The product involved in this incident is a Yamaha Rhino utility atv. The atv does not belong to the victim but rather her friend. To the victim's knowledge, the vehicle had not been either modified or repaired. The owner of the atv had an opportunity to get some doors for the atv from the manufacturer but decided she did not want them. The atv was approximately three years old at the time of the incident. The victim stated that the driver of the vehicle had consumed alcohol prior to the incident. None of the riders had a helmet on.

According to the victim, the incident occurred on March 15th 2008 around midnight. The incident occurred at Shiloh Ridge ATV Park near Alto, Texas. She had gotten on the atv with two of her female friends which were seated three across on the front of the atv. The victim was on the right side of the seat, the owner was in the middle and the driver was in the driver's position. There were several atvs in the group. At one point the atv that the victim was in came to a dirt embankment. Several atvs had trouble negotiating the embankment. The driver had decided to negotiate the embankment at a different point. As the atv started up the embankment it rolled backwards and then rolled over to its right side. It landed on the victim's leg and she was trapped until bystanders were able to move the atv off of her leg. The victim also stated that she had her seatbelt on but wasn't sure if the other riders had a belt on or not. The victim was taken back to the base camp and rescue personnel were summoned. They arrived and transported the victim to the hospital. The victim stayed at the hospital five days. The victim sustained injuries to her right leg which included a broken tibia, a severed ankle bone as well as severed tendons and ligaments in her foot. She also suffered a torn meniscus in her left knee. The victim still has swelling in her right ankle and is supposed to undergo corrective surgery on October 8th 2008. Currently the victim cannot run and does not have lateral movement but according to doctors, the scheduled corrective surgery should alleviate this.

The victim has not had any contact either from or to the atv manufacturer. She also has had no contact with the other riders on the atv because of possible legal action.

Continued...

Hospital Victim was taken to:

ETMC Jacksonville (East Texas Medical Center)
510 S. Ragdale Street
Jacksonville, TX. 75766

Phone:
(903) 541-5000

ATV Manufactured by:

Yamaha Motor Corporation, U.S.A.
Attn: Online Privacy Manager
6555 Katella Avenue
Cypress, California 90630-5101

Website:
www.yamaha-motor.com

The product involved in this incident is a four wheeled, Yamaha Rhino utility atv. Further details about the atv are unavailable. The driver and the owner of the atv no longer speak to the victim as a result of this incident.

Additional information requested in the assignment message:

1) If the victim(s) was wearing a seatbelt?
Yes

2) Wearing a helmet?
No

Continued...

3) Where were the passengers (if any) seated?
Yes

4) How the victim(s) reacted when the vehicle started to tip over.
Surprised and tried to hang on

5) Type of terrain/grade/surface/weather conditions?
Dirt (off road), steep grade, uneven surface, clear weather

6) Reason(s) for purchasing a side-by-side vs. an ATV
So daughter could ride along

7) Primary use of the vehicle? (recreation?)
Recreation

8) What kind of training/experience did the driver have?
Training unknown/ One year of experience for driver

9) Did the dealer provide any safety information or cautions regarding stability?
Unknown

10) Have they had any contact from the dealer or manufacturer regarding retro-fit doors or other accessories?
Yes

***Note:** Complainant has agreed to have her name released to the manufacturer and to the public.

Attachments

I. **Respondents**
One (1) Page

II. **Victim Narrative**
Four (4) Pages

III. **Name Release**
One (1) Page

Respondents

Sandra Taylor
Complainant/Victim
16330 Scenic Circle
Forney, TX. 75126

Phone:
(214) 675-4176

Email:
mtaylor@custard.com

Witness Information & Synopsis-Accident Sandra Taylor , Shiloh Ridge ATV Park Near Alto, Texas 3-14 / 3-15-08. Brief Fact Scenario and Witness Information:

Events and Timeline Leading up to the Injury

- The Taylor family arrived at the Park around 10:45-11:00 p.m. on March 14th, a Friday night. We met up with the group as we had done several times before at the camping area. We connected the RV to power poles, my youngest two kids decided to take a shower and retire watching a movie. We were invited, Sandra, George, my son, and I were invited to take a ride to the "bottoms" on an easy check-out-the-crowd ride. There are easy dry paths all around the "bottoms". The intent of the night ride was to be a relaxing, calm, causal ride; it was not going to be a "course challenge" type ride. Although we take these coarse challenge rides, Sandra never participates. Most everyone who operates an ATV or UTV knows the difference in "easy" and "course challenge" rides at an ATV park. There were novice folks with us, and passengers on the ATVs within in the group, including my wife and kids under 16. Dana and Shannon invited Sandra to ride with them Dana or Shannon were driving a UTV Yamaha / UTV= (Utility All-Terrain Vehicle equipped with side-by-side seats)

- We travelled uneventfully to the "bottoms" area as a group. We were safe, and the group mostly stayed together, in line and keeping the ride easy. We spent about 15-20 minutes in the bottoms with the engines turned off and observing folks who were stuck in the mud. We decided to continue the ride.

- Brian, one of the witnesses, from Emory TX, emerged as the leader, just by chance as the path chosen was in the SW of the bottoms. I was a passenger in the bed of his Arctic Cat UTV, and Joel was his passenger. Dana, as I recall was 4th in line, behind my son George. In my opinion, I do not believe anyone in our group had been on this trail.Soon on the trail, we reached an impasse while going uphill just SSE about ½ mile out of the "bottom-lands" near the creek in the south exit area.

- When Brian approached the hazard, as he was leading the group, he stopped, and I believe we all were concerned about our ability to safely continue. Everyone else was behind us in the group. The trail was narrow and uphill, and everyone stayed on or in their respective units with engines running and lights on.

- As Brian came to a safe stop, he allowed Joel and I to get out of the he Arctic Cat. The impasse we met was a "wash wall" , or an eroded part of a trail that created a wall of 2-3' and it was dangerous going uphill or downhill for any vehicle. I do not think many in the group, my son, wife or I, had ever been on this trail.

- While Brian was maneuvering the Arctic Cat up the wall, I turned to help Joel with the ATV his daughter was driving; I helped push her ATV, but very soon it was clear it wasn't going to make it.

- Then I turned and looked to Brian who had made it to the plateau. He stopped but did not get out. I said we were going to have to find another way, however. Joel was still trying to get his daughter's ATV up the hill without any luck.

- I was in the process of turning around to tell my son that we would need to go back in about 3-4 seconds after seeing the trouble Joel was having. I believe Joel and I were the only people on the trail , everyone else was in-line atop or inside their UTV / ATV, engines idling , lights "on".. At this juncture, likely only about 120 seconds had elapsed from initial "stopped" time to current scenario.

- At that time, I heard an engine "rev" and a UTV unit flash to my left, in the silhouette about 25 feet from me (as I was still near the middle of the trail) I saw the UTV approaching the left side of the wall-wash headed for the far left side. I immediately started moving toward it, about 14-15 feet away.

- It was unbelievable to me as I saw Dana was approaching the left side of the "concern" area (hazard) at a near surreal speed. I heard my wife scream as they were about even with me on the trail. I wanted to scream for her to jump, yet there wasn't time, I then heard Dana "get on" the accelerator even more" as she came to the embankment while revving-up the engine hard , I then heard my wife say " Oh God , Oh God" .

- Then I saw the LF wheel hit a pine-tree root extension, by this time, the UTV had moved about 20 feet passed me and my wife's waist and abdomen were about even with my line of sight. I was in the pit of the wash wall area at that point.

- I saw the LF wheel bounce up hard, when it contacted the root and tree ball base I saw the rear tires slide down the bank then the whole rear end slid downhill and the front stayed at the narrow part of the embankment leading to the plateau. The unit began to turn over front to back as the RR wheel hit the lip of the "wall/ impasse area" Dana turned to the wheels left,, but the entire unit pivoted and fell in both a front to back and left side to right side direction..

- I reacted by attempting to grab onto the UTV, but, it already had tremendous momentum, I could not hold back the unit. It fell as soon as the RR wheel hit the pit lip, the whole 3500 lbs came crashing violently into the rock and clay pit at the base of the wall. It fell from about 4-5 feet down into the pit or wall base from the ledge. It hit with such force that it threw an ice chest out of the UTV out about 12-15 feet downhill. I specifically remember that because of two distinct sounds, the

crash of the unit and the ½ second later crash of an ice chest being propelled about 10-12 feet down the hill slinging drinks and ice all along the trail.

- After impact, about 10-12 seconds went by without hearing anything. I thought my wife was dead as there was a thud sound along with a metal sound at impact. I also recall it seemingly taking a long time for everyone else in our group to get there to help me.

- Dana and Shannon were both trapped in the unit. I did not see how Shannon exited the unit, they remained in the cab. Dana, exited the driver's side, now the top and I briefly helped her pull herself out of the top or drivers side. At that point, my major concern was about was getting "people weight" off of Sandra. Dana likely weighs over 235 and Shannon likely weighs 145-150. We could not lift the unit off with Dana and Shannon still in the in the unit. Somewhere under there was my wife. My wife spoke first I recall, about 10 seconds after the impact. Up to that point I felt she may be dead, because I have interviewed and investigated 1000s of crashes in my profession, been on-scene with 100s, and dealt with post-crash dynamics. I believed there was a good chance she was dead due to the force of the impact. When she spoke she said her leg was pinned underneath the unit, and she pleaded for help. She then said "Mark, I believe my ankle and leg are broken and I am trapped". Brian, the Police Officer, and I all worked to free her, but it took 3 large males to get the vehicle off of her.

- At that point, Paige, the Garland Police Dispatcher, began to use her EMS training and we closed off the wound and fracture and moved Sandra to Brian's Arctic Cat bed. From there, we, travelled to the park office and to the Hospital ICU.

- The Park can recreate addresses of Joel, Shannon, Brian and the Garland, TX Officer and dispatch information. Shiloh Ridge ATV retains sign-in sheets for 7 years. Tommy is a representative of the park. There was a Garland Police Officer married to a Garland police dispatcher, (cant be but one Paige, and one officer in Garland) She was EMS certified and was the one who kept Sandra calm as we traveled to a place where the ambulance was to arrive at the park entrance.

The park, ambulance and hospital records should fill in the details from this point forward and should serve to supplement the above facts.

Conclusions & Basis of Underlying Claim-Sandra and Mark Taylor

We have not thanked the witnesses for their needed help. As you speak with them, please know this. We have not since questioned them. We have experienced a very "hands-off" approach to us from several of the witnesses in a "well you were injured" and now you are no good types of physical communication. Some of this is to be expected. This "circle" of friends, to us, was an ATV group. An investigator needs to consider this attitude by the other parties when they are approached. We believe Dana and her partner are good people; we harbor no anger towards her family. We have no desire to drag this through a Cherokee County District Court as a first response action.

We do not know what came over Dana that night while she sat in line there at the hazard-area-impasse. There was no predisposition in Dana's previous driving actions ever known to cause us to believe or forecast such an unsafe and reckless action. She was always previously careful as my son and I had ridden trails with her. My wife rode with her and Shannon that night because of her safe history. My wife is the definition of exactly opposite of a risk-taker. We do not know why Dana, on a moment's notice, "gunned it" into the left side of the trail where neither Brian or Joel's daughter would try due to the immediate and obvious peril.

So, whatever may be argued, mitigated or discussed, the fact is that a decision was made that night by Dana to "go for it". The second issue involves the extraordinary degree of care at issue, and owed for one's passengers. In that moment, Dana had no regard for passenger safety. We believe this is compelling in that Dana was stopped on the trail, viewed the hazard, watched us, Joel and I, get out of a considerably larger UTV, and had ample time to reasonably assess the serious risk for a period of about 2-3 minutes. We can find absolutely no explanation as to what caused Dana to gun the engine and maneuver to the left side of the trail in the UTV.

Whether one is the captain of a ship, an operator of a car, the driver of a UTV, or a pilot of a plane, it is a responsibility of high regard to keep passengers safe. It is the ultimate responsibility.

Something triggered Dana to "go for it" without warning, and even with passengers aboard, she "went for it", into harm's way, with my wife screaming and heading for certain serious injury or death. In catching my wife's expression, I know my wife would have walked home or back to camp in the dark if she had one iota of a notice that Dana was going to try to go up the wall with her as a passenger. We do not need the risk, as Sandra's income depends on her physical ability to perform.

Dana went where no one else would go that night, and in an unsafe reckless and extremely dangerous maneuver with passengers aboard. It nearly resulted, and could have easily resulted in death. Dana did not operate the UTV as would a reasonable person would have operated the UTV under similar circumstances. It is ironic and somewhat of a paradox, that a less-than-death-crippling injury, with likely life-long complications, should be considered a fortunate outcome, but we do consider it to be a fortunate outcome in a way; we could have been dealing with Sandra's funeral.

Please feel free to contact us for further information, or if anyone wants to view the current condition of Sandra's leg and foot, we will be happy to cooperate.

Sandra and Mark Taylor

080811CWE7667

U.S. Consumer Product Safety Commission

AUTHORIZATION FOR RELEASE OF NAME

Thank you for assisting us in collecting information on a potential product safety problem. The Consumer Product Safety Commission depends on concerned people to share product safety information with us. We maintain a record of this information, and use it to assist us in identifying and resolving product safety concerns.

We routinely forward this information to manufacturers and private labelers to inform them of the involvement of their product in an accident situation. We also give the information to others requesting information about specific products. Manufacturers need the individual's name so that they can obtain additional information on the product or accident situation.

Would you please indicate on the bottom of this page whether you will allow us to disclose your name? If you request that your name remain confidential, we will of course, honor that request. After you have indicated your preference, please sign your name and date the document on the lines provided.

☐ I request that you do not release my name. My identity is to remain confidential.

☐ You may release my name to the manufacturer but I request that you do not release it to the general public.

☑ You may release my name to the manufacturer and to the public.

[signature] 9-22-08

(Signature) (Date)

CPSC Form 322

Doc No: I0840189A **Issue: 28** **04/11/2008**

04/09/2008 17:22:13

Name = Mark Taylor
Address = 16330 Scenic Circle
City = Forney
State = Texas
Zip = 75126
Email = mtaylor@custard.com
Telephone = 214-668-9071
Name of Victim = Sandra Taylor
Victim's Address = 16330 Scenic Cir.
Victim's City = Forney
Victim's State =
Victim's Zip = 75126
Victim's Telephone = 214-675-4176

Incident Description = V was riding as a passenger on a 2007 Yamaha ATV side-by-side and was belted in . The unit was a "Rhino" and the overturn resulted in a severe foot and leg injury with a FXed leg and laceraterated lower leg at ankle that is debilitating and a serious injury. Many witnessed the accident, we contend the unit is top heavy and should be equipped with a door or cage to protect lower leg injuries.

Victim's age at time of incident = 45
Victim's sex = female
Date of incident = 3-21-08
Product involved = Yamaha Side by Side ATV
Product brand name/manufacturer = Rhino
Manufacturer street address = California
Place where manufactured (City and State or Country) = Alto, TX
Product involved still available =
Product model and serial number, manufacture date = Not available at present, can determine
Date product purchased = The product was not ours, we believe 2007
Name Release = Release name to manufacturer only

DocNo: I0840189A

04/09/2008 17:22:13

Mark Taylor
16330 Scenic Circle
Forney TX 75126

Email = mtaylor@custard.com
Telephone = 214-668-9071
Name of Victim = Sandra Taylor
Victim's Address = 16330 Scenic Cir.
Victim's City = Forney
Victim's State =
Victim's Zip = 75126
Victim's Telephone = 214-675-4176

Incident Description = V was riding as a passenger on a 2007 Yamaha ATV side-by-side and was belted in. The unit was a "Rhino" and the overturn resulted in a severe foot and leg injury with a FXed leg and laceraterated lower leg at ankle that is debilitating and a serious injury. Many witnessed the accident, we contend the unit is top heavy and should be equipped with a door or cage to protect lower leg injuries.

Victim's age at time of incident = 45
Victim's sex = female
Date of incident = 3-21-08
Product involved = Yamaha Side by Side ATV
Product brand name/manufacturer = Rhino
Manufacturer street address = California
Place where manufactured (City and State or Country) = Alto, TX
Product involved still available = yes
Product model and serial number, manufacture date = Not available at present, can determine
Date product purchased = The product was not ours, we believe 2007
Name Release = Release name to manufacturer only

Sandra Taylor

1. Task Number	2. Investigator's ID	EPIDEMIOLOGIC INVESTIGATION REPORT
080827HWE0001	9068	

3. Office Code	4. Date of Accident YR MO DAY	5. Date Initiated YR MO DAY
840	2008 08 24	2008 08 28

6. Synopsis of Accident or Complaint **UPC**

A 29-year-old male was driving his UTV on his grass lawn with his three-year-old son and eight-year-old daughter as passengers. The only one wearing a seat belt was the daughter. No one was wearing a helmet. The father was traveling at about 10 mph and as he turned the UTV to the right, the vehicle tipped to the left. As the father stuck his leg out to stop the tip over, his son slid across his lap to the ground. The father's foot was on the ground holding up the UTV for a few seconds before his leg broke and the UTV rolled over and pinned the son at chest level. The child was transported to an area children's hospital where he died a few hours later from internal injuries.

MFR/PRVLBR NOTIFIED

COMMENTS: __YES ✓NO
__OVERRULED; __ATTACHED
✓EXCISIONS/FOIA EXS 2c 3, 6
✓DO NOT RE-NOTIFY __RE-NOTIFY
08/10/08

7. Location (Home, School, etc)	8. City	9. State
1 - HOME	LANCASTER	WI

10A. First Product	10B. Trade/Brand Name	10C. Model Number
5044 - Utility Vehicles	YAMAHA RHINO SIDE X SIDE	YXR66FAV

10D. Manufacturer Name and Address
YAMAHA MOTOR CORPORATION, USA
6555 Katella Avenue
Cypress, CA 90630

11A. Second Product	11B. Trade/Brand Name	11C. Model Number
0	NONE	NONE

11D. Manufacturer Name and Address
NONE

12. Age of Victim	13. Sex	14. Disposition	15. Injury Diagnosis
3	1 - Male	8 - Death	54 - Crushing

16. Body Part(s) Involved	17. Respondent	18. Type of Investigation	19. Time Spent (Operational / Travel)
31 - UPPER TRUNK	1 - Victim/Complainant	1 - On-Site	14 / 6

20. Attachment(s)	21. Case Source	22. Sample Collection Number
9 - Multiple Attachments	05 - Newspaper	

23. Permission to Disclose Name (Non NEISS Cases Only)

○ Yes ● No ○ Verbal ○ Yes for Manuf. Only

24. Review Date	25. Reviewed By	26. Regional Office Director
09/12/2008	8929	Frank J. Nava

27. Distribution	28. Source Document Number
Hartman, Jason; Topka, Tanya	N0880849A

1. Task Number	2. Investigator's ID	EPIDEMIOLOGIC INVESTIGATION REPORT
080827HWE0001	9068	

3. Office Code	4. Date of Accident YR MO DAY	5. Date Initiated YR MO DAY
840	2008 08 24	2008 08 28

6. Synopsis of Accident or Complaint **UPC**

A 29-year-old male was driving his UTV on his grass lawn with his three-year-old son and eight-year-old daughter as passengers. The only one wearing a seat belt was the daughter. No one was wearing a helmet. The father was traveling at about 10 mph and as he turned the UTV to the right, the vehicle tipped to the left. As the father stuck his leg out to stop the tip over, his son slid across his lap to the ground. The father's foot was on the ground holding up the UTV for a few seconds before his leg broke and the UTV rolled over and pinned the son at chest level. The child was transported to an area children's hospital where he died a few hours later from internal injuries.

7. Location (Home, School, etc)	8. City	9. State
1 - HOME	LANCASTER	WI

10A. First Product	10B. Trade/Brand Name	10C. Model Number
5044 - Utility Vehicles	YAMAHA RHINO SIDE X SIDE	YXR66FAV

10D. Manufacturer Name and Address
YAMAHA MOTOR CORPORATION, USA
6555 Katella Avenue
Cypress, CA 90630

11A. Second Product	11B. Trade/Brand Name	11C. Model Number
0	NONE	NONE

11D. Manufacturer Name and Address
NONE

12. Age of Victim	13. Sex	14. Disposition	15. Injury Diagnosis
3	1 - Male	8 - Death	54 - Crushing

16. Body Part(s) Involved	17. Respondent	18. Type of Investigation	19. Time Spent (Operational / Travel)
31 - UPPER TRUNK	1 - Victim/Complainant	1 - On-Site	14 / 6

20. Attachment(s)	21. Case Source	22. Sample Collection Number
9 - Multiple Attachments	05 - Newspaper	

23. Permission to Disclose Name (Non NEISS Cases Only)

○ Yes ● No ○ Verbal ○ Yes for Manuf. Only

24. Review Date	25. Reviewed By	26. Regional Office Director
09/12/2008	8929	Frank J. Nava

27. Distribution	28. Source Document Number
Hartman, Jason; Topka, Tanya	N0880849A

IDI 080827HWE0001

This death incident was brought to the attention of the U.S. Consumer Product Safety Commission through a newspaper article. This report was compiled from interviews with the parents, sheriff's department and coroner's office.

INCIDENT REPORT

The 29-year-old father of three children (8 yof, 3 yom and 9 mof) stated that he purchased a new 2006 Yamaha Rhino 4 x 4 660cc UTV in August, 2006 from an area dealer. He added that he purchased the UTV to use primarily on his 2.5 acre lot to clear leaves, haul wood and plow snow. The father related that he was aware that the UTV was intended for off-road only and could not be operated on roads or ATV trails. He noted that over the last two years, he has used the UTV primarily on his own property and occasionally used it to help neighbors haul wood and put in fences. Following and included in Exhibit "A" is a photograph of the UTV.

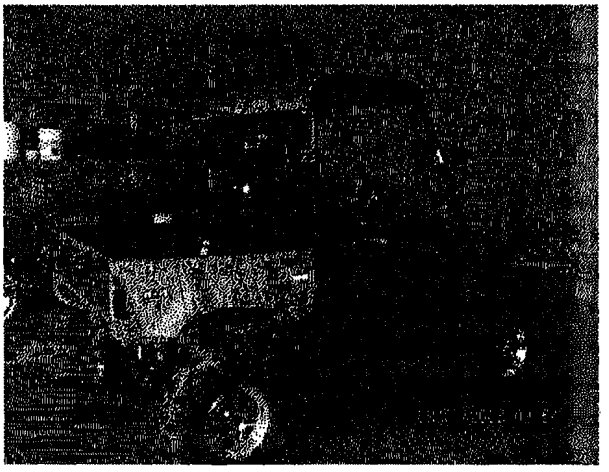

The father advised that accompanying the UTV was an Owner's Manual that he kept in the garage to refer to when needed. Attached as Exhibit "B" is a copy of the manual. He added that he does not recall whether the dealer provided any safety information or cautions regarding the stability of the vehicle other than the warning labels adhered to the vehicle. The father advised that he is very familiar with ATV's and explained that he grew up on a farm with 105 acres of land. He added that he drove an ATV daily on the farm to herd cows and move from field to field. The father noted that when he was 13-years-old he purchased his first ATV. He added that he has also owned several mini-bikes over the years.

The father advised that shortly after purchasing the UTV, he added a metal roof to the top to provide protection from the sun and to deter fading of the leather seats. He informed that he made and attached the roof himself. The father related that the only other attachment he had for the UTV was a plastic shield he put in the windshield area in the winter to break the wind when he was plowing snow. He added that ever since he purchased the UTV, he has not experienced any problems with the vehicle.

The father stated that for Father's Day in 2007, his wife and children gave him a new set of tires for the UTV which he put on that summer. These new tires were wider than the factory issued tires

that came with the UTV and provided more stability. Following is a comparison of the width of the two sets of tires:

Old	**New**
Front – 8"	**Front – 9"**
Back – 10"	**Back – 12"**

Photographs of the two sets of tires are included in Exhibit "A".

The father stated that in the late fall of 2007, he received a postcard in the mail from Yamaha noting that they were adding removable doors to the Yamaha Rhino UTV. The owners were to contact their local Yamaha dealer and schedule an appointment to pick up plastic portable doors and to add sleeves to the UTV on the sides for the doors to slide into. The driver would need to get into the UTV first and then insert the plastic doors into the sleeves. Upon getting out of the UTV, the driver would have to remove the portable doors before being able to exit the vehicle.

Before the father ever made an appointment to have the door sleeves added, he talked with other Yamaha Rhino owners who informed that the doors were made of a flimsy plastic and not very durable. In addition, the father stated that during the winter of 2007, he ran into a salesman from the Yamaha dealership where he had purchased the UTV. The salesman inquired if the father was enjoying the UTV. The father responded that he really liked the UTV and noted that he had received a notice from Yamaha about adding doors to the vehicle. The salesman advised that the initial doors being offered were made of flimsy plastic and a second set of metal doors with hinges was in the works to replace the plastic door inserts. At this point, the father decided to wait until the metal doors were available before having the doors added. The father further noted that he understood from the correspondence with Yamaha and conversations with the dealer's salesmen that the doors were being added to prevent the driver's natural reflex to stick out his leg in the event the UTV would start to tip.

The mother stated that almost daily since they purchased the UTV, her husband would give the two older children rides around their property. She added that when her husband would get home from work each day, the children would immediately ask him for a ride on the UTV if the weather was nice. The mother related that her husband and the two older children would go for a ride on the grass around their property, usually about 10 – 15 times around, while she got dinner ready. She added that ever since her son was 18 months old, he has enjoyed rides on the UTV.

The father related that whenever he gave the children a ride, his oldest daughter would sit in the passenger seat and his son would sit partially with his daughter on the seat and put his left leg up on the console between the two seats. He added that the seats were divided by a console and there were seat belts provided for each seat. The father stated that his daughter would always wear her seat belt. He added that he did not wear a seat belt and there was not a seat belt for his son to wear while sitting in the middle. The father informed that none of them would wear a helmet while they drove around the yard. He added that he is very careful when giving the children rides, does not speed and usually goes about 10 mph.

The father informed that he would start on the front cement driveway car port then drive off onto the grass yard, down a slope in the front yard, across the front yard, across the gravel drive way, between the trees to behind the garage, around the back of the house to the side yard and then start the large circle all over again. He added that they always took the same path around the house and his daughter referred to the ride as their "secret path". Attached as Exhibit "C" is a drawing the father made of the property and the route he would take with the children around the yard on the UTV.

On August 24, 2008, the father related that he arrived home from work at about 11:00 AM and his children immediately asked for a ride on the UTV. He added that it was a nice, dry day and in the 70's when he got the UTV out for a ride. The father advised that the three of them got into the UTV, his eight-year-old daughter in the passenger seat with her seat belt on, his three-year-old son partially on the seat with his daughter and partially on the console without a seat belt and he was in the driver's seat without a seatbelt. He added that none of them was wearing a helmet.

The father stated that they started off on their ride and made three laps around the property. On the fourth lap, the father noticed that there were old corn stalks in the garden area on the side of the house and decided to stop and pick them up to take to the burn pile on the other side of the house. After transporting the corn stalks to the pile, the father noted that they then continued riding around the property. He recalls making two more complete laps around the house.

The father advised that on the next lap, he proceeded down the front yard slope at about 10 mph and as he made the right turn to go across the front of the yard, he touched the brakes and the tires on the UTV dug into the ground. At this point the vehicle started to tip to the left and as the father instinctively put out his left leg, his three-year-old son slid across the father's lap out of the vehicle onto the ground. The father's foot was on the ground holding up the vehicle for just a few seconds before his leg broke and the vehicle rolled onto the driver's side pinning the three-year-old under the roll bar. The eight-year-old daughter then crawled out of her seat belt and ran back to the house to get her mother. The mother ran down the front yard to the scene and helped her husband left the UTV to get the three-year-old out from under the roll bar. The child was unconscious and unresponsive.

The mother placed a "911" call for assistance and an EMS squad arrived on the scene within minutes. The rescue squad transported the three-year-old to an area hospital where he was air-lifted to a children's hospital in the area. The sheriff's department arrived on the scene as the child was leaving in the rescue squad and called for another ambulance for the father. The sheriff's department interviewed the parents and their comments have been incorporated into this report. Attached as Exhibit "D" is a copy of the sheriff's department report.

A second ambulance arrived on the scene and transported the father to an area hospital. When the father arrived at the hospital, the lower portion of his leg bone had broken through the skin and was exposed. He was later transferred to a larger hospital in the area where surgery was performed to reset his leg.

At 2:40 PM on August 24th, the county coroner received a telephone call from the sheriff's department advising that the three-year-old son had died at the children's hospital. The coroner contacted the hospital and the medical examiner in that county to obtain additional information on the incident and death. The coroner listed the manner of death as accidental and the cause of death to be internal injuries. Attached as Exhibit "E" is a copy of the coroner's report.

This investigator received this assignment on August 28th and contacted the sheriff's department and coroner's office for copies of their reports. On September 10, 2008, this investigator and the county coroner met with the father involved in this incident and conducted an on-site interview and took photographs of the UTV and incident site. On September 11th, this investigator contacted the mother of the victim and interviewed her by telephone.

At these interviews, the father related that he has seen advertisements by a law firm on the "Outdoor" channel on his television. The advertisement requests owners of Yamaha Rhino UTV's who are having problems with the vehicle to contact the law firm. The father stated that they are currently talking with an area attorney about the incident and have not contacted the law firm noted in the advertisement. The mother related that since the incident, she has had telephone conversations with a woman from Texas who also lost her son on a Yamaha Rhino UTV.

PRODUCT IDENTIFICATION

Product:	**YAMAHA RHINO SIDE X SIDE**
Manufacturer:	**YAMAHA MOTOR CORPORATION, U.S.A.** **6555 KATELLA AVENUE** **CYPRESS, CA 90630**
Dealer:	**MIDWEST MOTOR SPORTS** **3699 PRISM LANE** **KIELER, WI 53812** **(608) 568-3600**
Model:	**YXR66FAV**
CC:	**660**
VIN:	(b)(3):CPSA Section 25(c),(b)(6)
Age:	**2006 (Purchased new)**
Weight:	**1050 lbs.**
Tires:	**1 TP (Purchased new 6/2007)**
Odometer:	**None**

WARNING LABELS

There were several warning labels on the UTV and in the Owner's Manual. They can be found in Exhibit "A" and Exhibit "B".

ATTACHMENTS

Exhibit "A" – Photographs of the UTV, component parts, labeling and incident scene.

Exhibit "B" – Owner's Manual

Exhibit "C" - Sheriff's Department reports.

Exhibit "D" – Drawing by father of UTV path taken around incident property.

Exhibit "E" – Coroner's report.

Exhibit "F" – Contact List

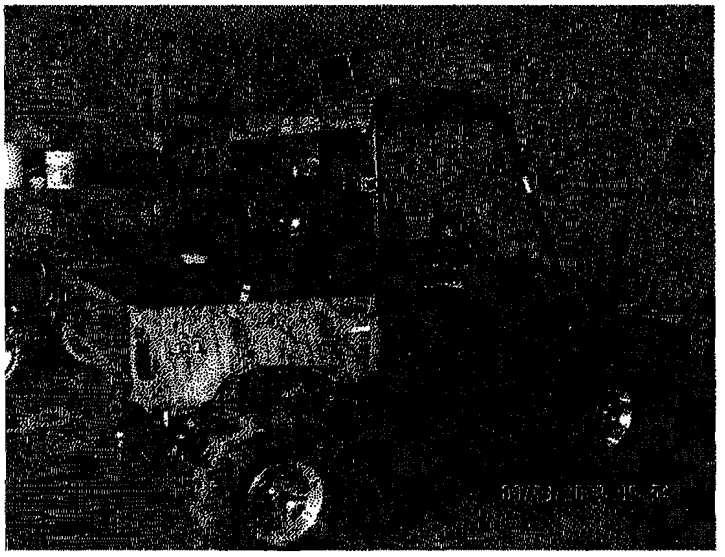

IDI 080827HWE0001 – Exhibit "A" – 2006 Yamaha Rhino UTV Side x Side – Model: YXR66FAV, 660cc

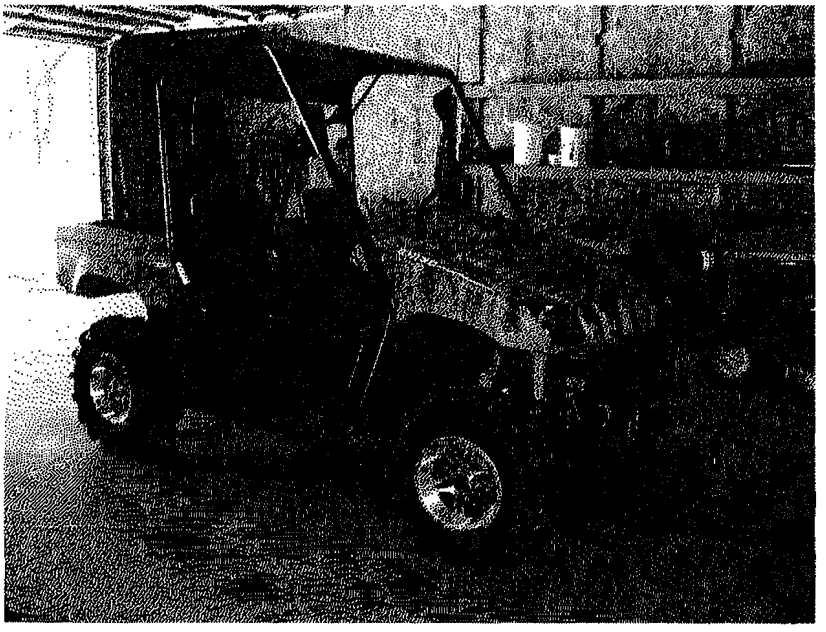

IDI 080827HWE0001 – Exhibit "A" – 2006 Yamaha Rhino UTV Side x Side – Model: YXR66FAV, 660cc

IDI 080827HWE0001 – Exhibit "A" – 2006 Yamaha Rhino UTV Side x Side – Model: YXR66FAV, 660cc

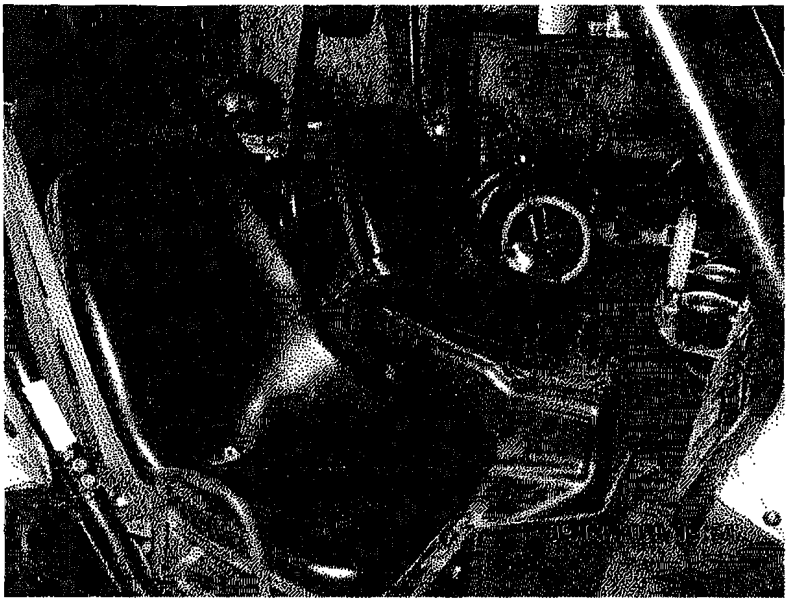

IDI 080827HWE0001 – Exhibit "A" – 2006 Yamaha Rhino UTV Side x Side – Model: YXR66FAV, 660cc - Inside passenger seat where daughter and victim were sitting.

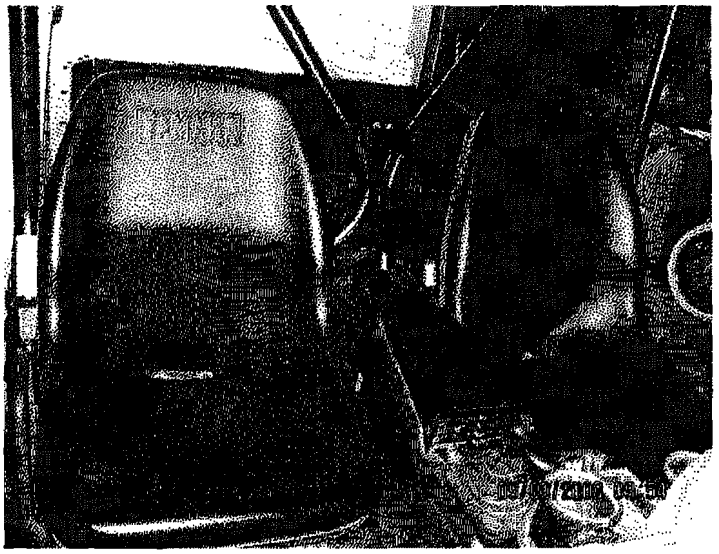

IDI 080827HWE0001 – Exhibit "A" – 2006 Yamaha Rhino UTV Side x Side – Model: YXR66FAV, 660cc - Inside passenger seat where daughter and son were sitting.

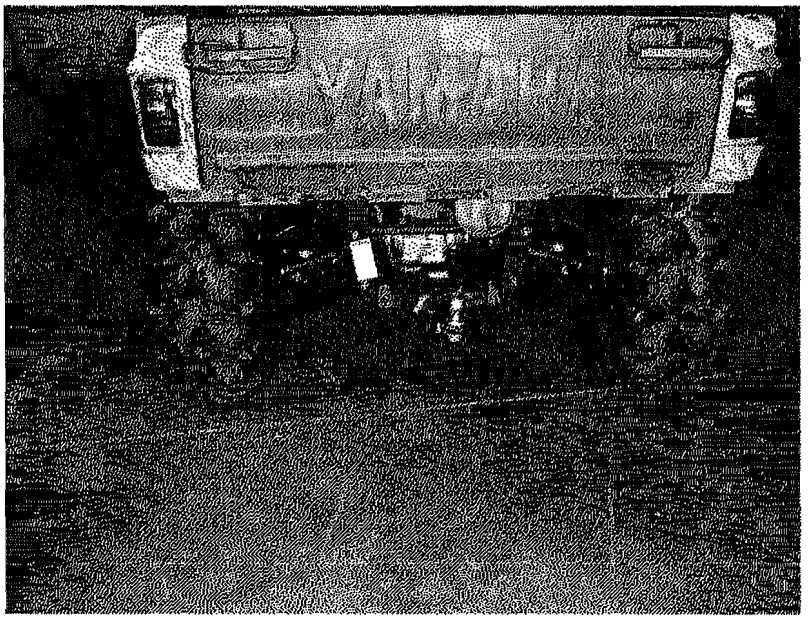

IDI 080827HWE0001 – Exhibit "A" – 2006 Yamaha Rhino UTV Side x Side – Model: YXR66FAV, 660cc – New tires put on 6/07.

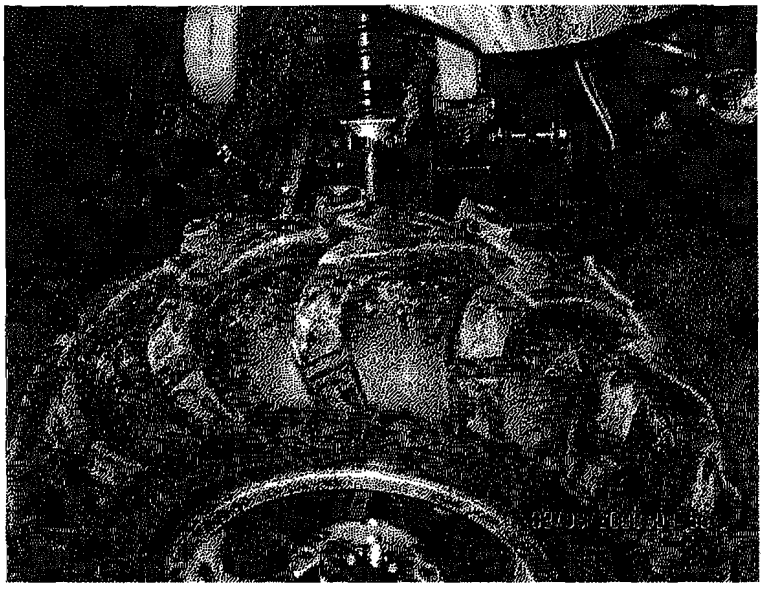

IDI 080827HWE0001 – Exhibit "A" – 2006 Yamaha Rhino UTV Side x Side – Model: YXR66FAV, 660cc – New tires put on 6/07.

IDI 080827HWE0001 – Exhibit "A" – 2006 Yamaha Rhino UTV Side x Side – Model: YXR66FAV, 660cc – New tires put on 6/07.

IDI 080827HWE0001 – Exhibit "A" – 2006 Yamaha Rhino UTV Side x Side – Model: YXR66FAV, 660cc – New tires put on 6/07.

IDI 080827HWE0001 – Exhibit "A" – 2006 Yamaha Rhino UTV Side x Side – Model: YXR66FAV, 660cc – Original tires that came with UTV.

IDI 080827HWE0001 – Exhibit "A" – 2006 Yamaha Rhino UTV Side x Side – Model: YXR66FAV, 660cc – Product labeling.

IDI 080827HWE0001 – Exhibit "A" – 2006 Yamaha Rhino UTV Side x Side – Model: YXR66FAV, 660cc – Product labeling.

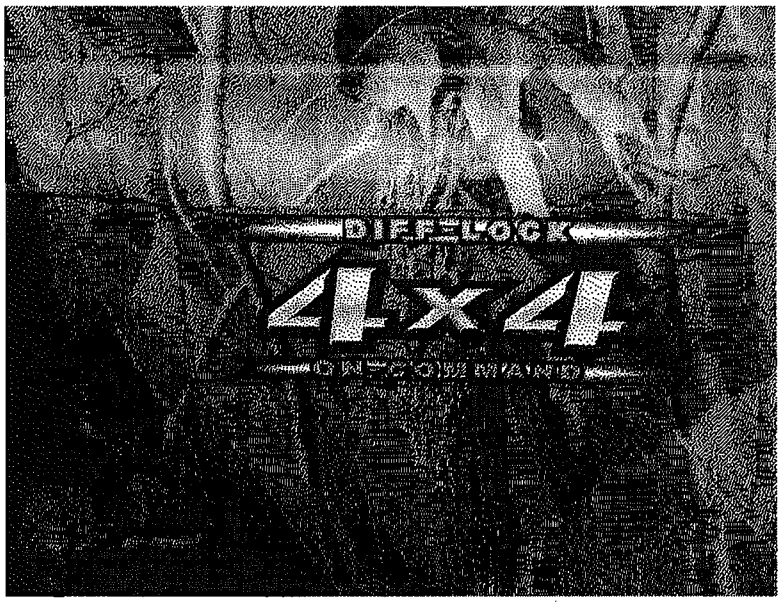

IDI 080827HWE0001 – Exhibit "A" – 2006 Yamaha Rhino UTV Side x Side – Model: YXR66FAV, 660cc – Product labeling.

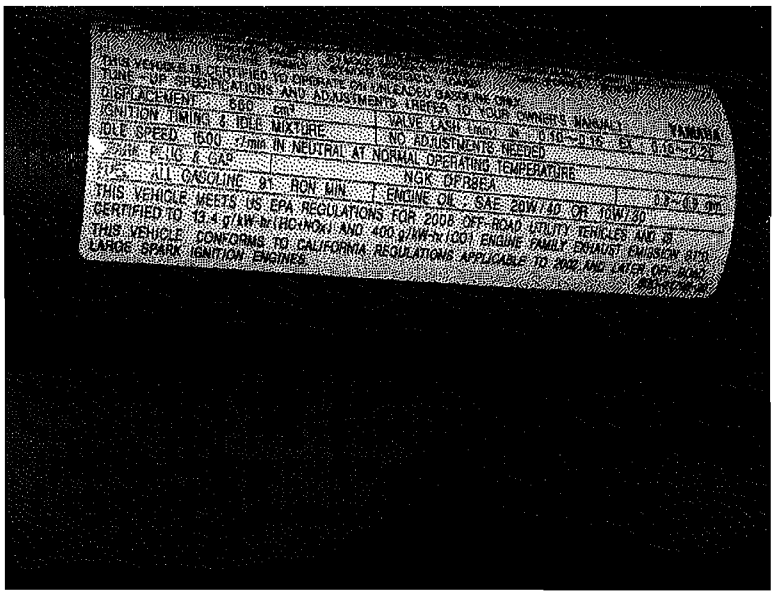

IDI 080827HWE0001 – Exhibit "A" – 2006 Yamaha Rhino UTV Side x Side – Model: YXR66FAV, 660cc – Product labeling.

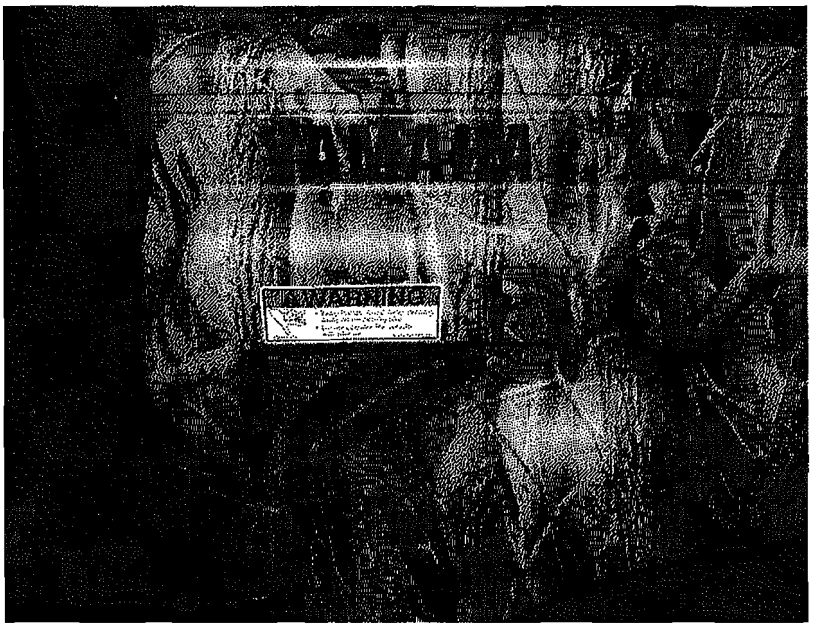

IDI 080827HWE0001 – Exhibit "A" – 2006 Yamaha Rhino UTV Side x Side – Model: YXR66FAV, 660cc – Product labeling.

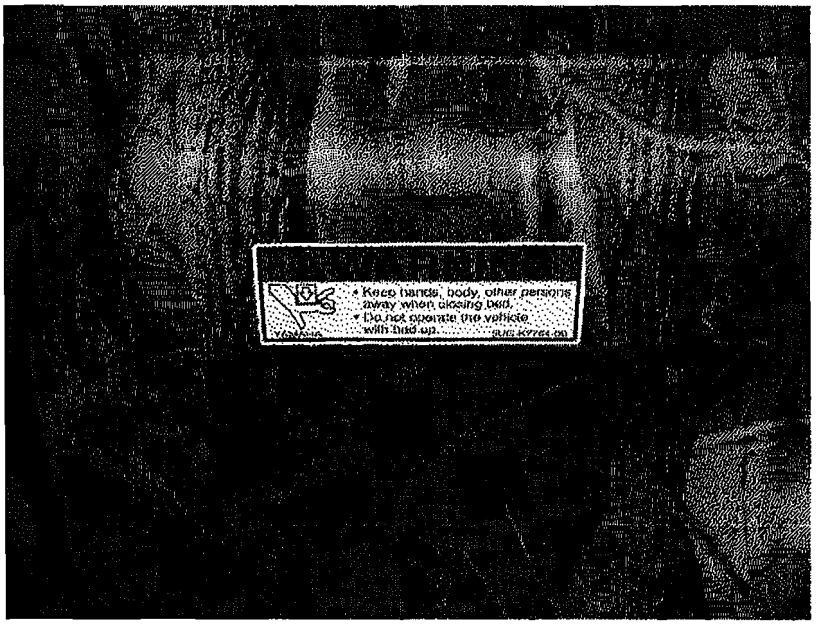

IDI 080827HWE0001 – Exhibit "A" – 2006 Yamaha Rhino UTV Side x Side – Model: YXR66FAV, 660cc – Warning label.

IDI 080827HWE0001 – Exhibit "A" – 2006 Yamaha Rhino UTV Side x Side – Model: YXR66FAV, 660cc – Warning label.

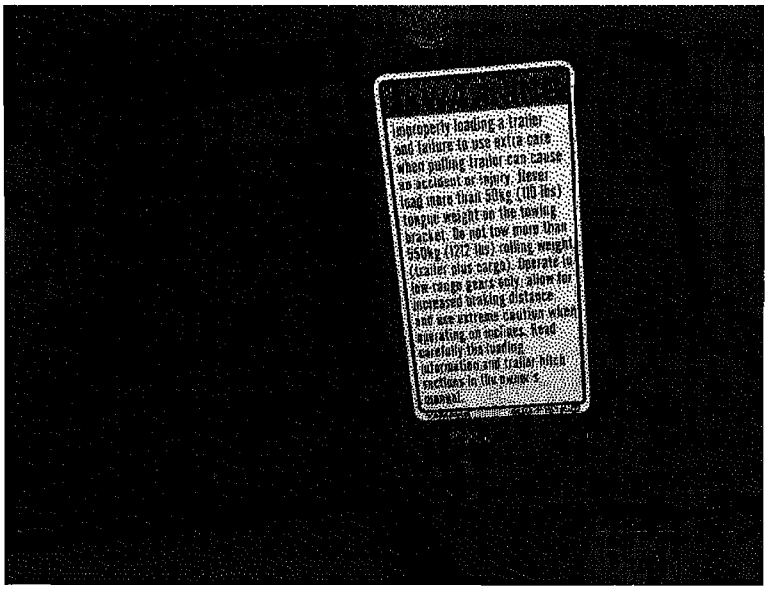

IDI 080827HWE0001 – Exhibit "A" – 2006 Yamaha Rhino UTV Side x Side – Model: YXR66FAV, 660cc – Warning label.

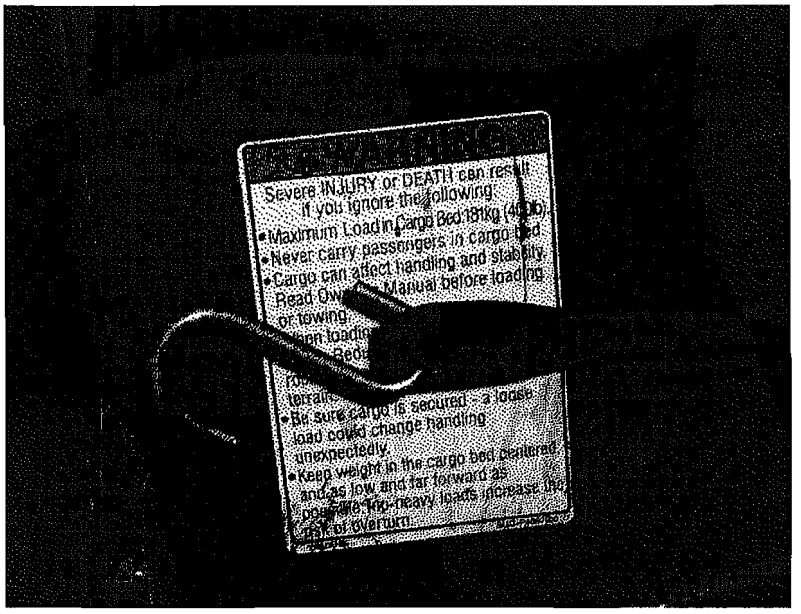

IDI 080827HWE0001 – Exhibit "A" – 2006 Yamaha Rhino UTV Side x Side – Model: YXR66FAV, 660cc – Warning label.

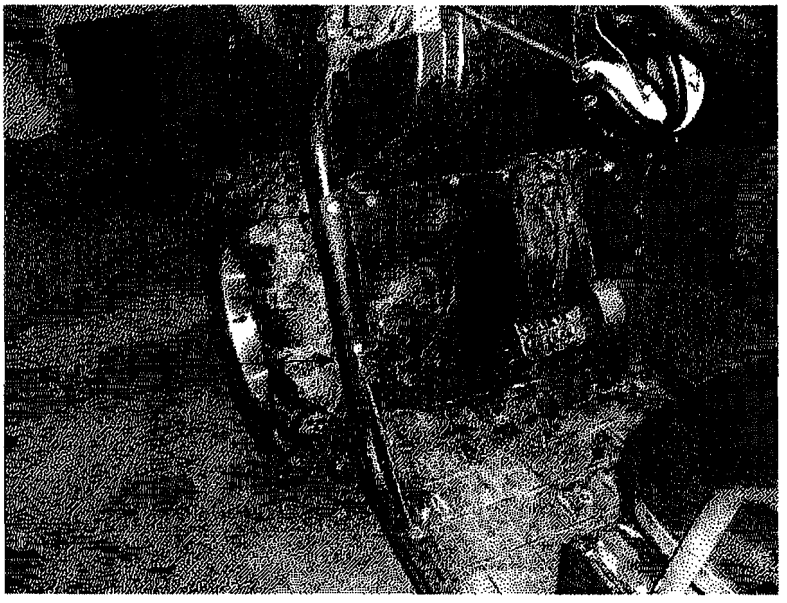

IDI 080827HWE0001 – Exhibit "A" – 2006 Yamaha Rhino UTV Side x Side – Model: YXR66FAV, 660cc – Arrows point to bolts were new doors were going to be attached.

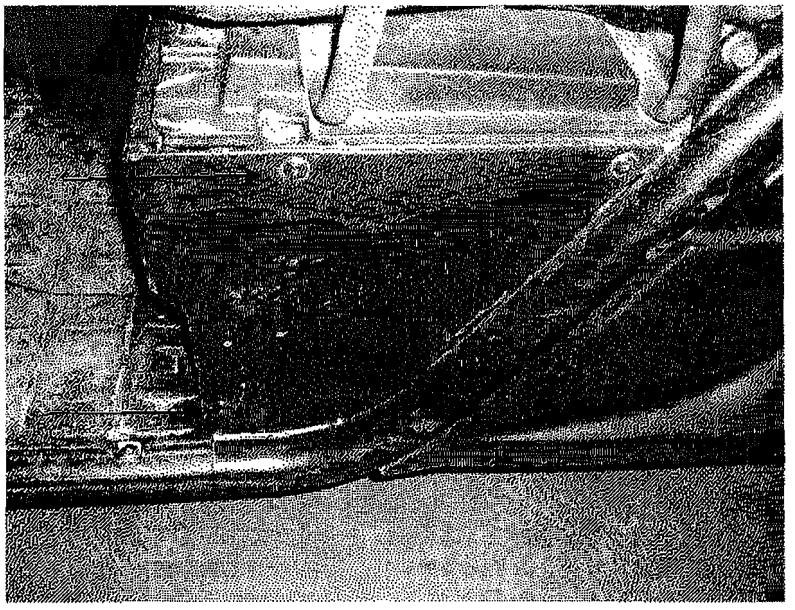

IDI 080827HWE0001 – Exhibit "A" – 2006 Yamaha Rhino UTV Side x Side – Model: YXR66FAV, 660cc – Arrows point to bolts were new doors were going to be attached.

IDI 080827HWE0001 – Exhibit "A" – 2006 Yamaha Rhino UTV Side x Side – Model: YXR66FAV, 660cc – Front yard where ride started.

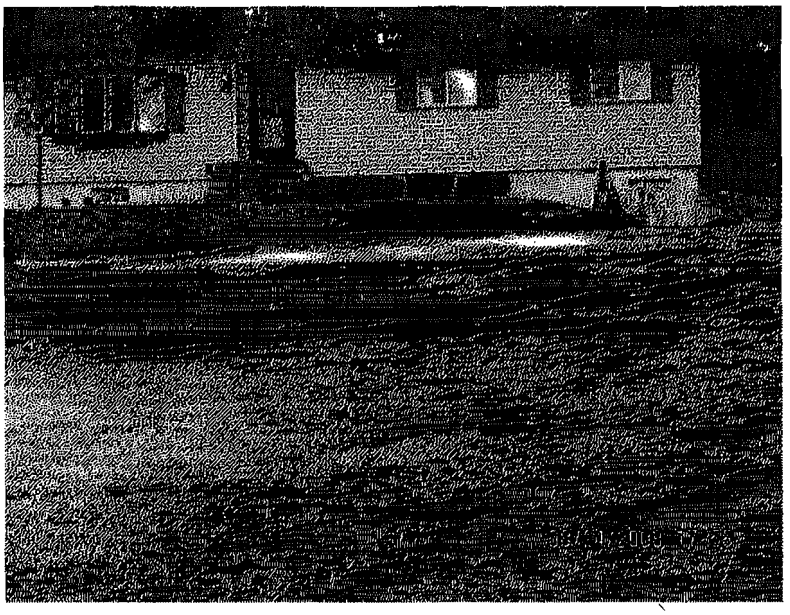

IDI 080827HWE0001 – Exhibit "A" – 2006 Yamaha Rhino UTV Side x Side – Model: YXR66FAV, 660cc – Front yard where ride started.

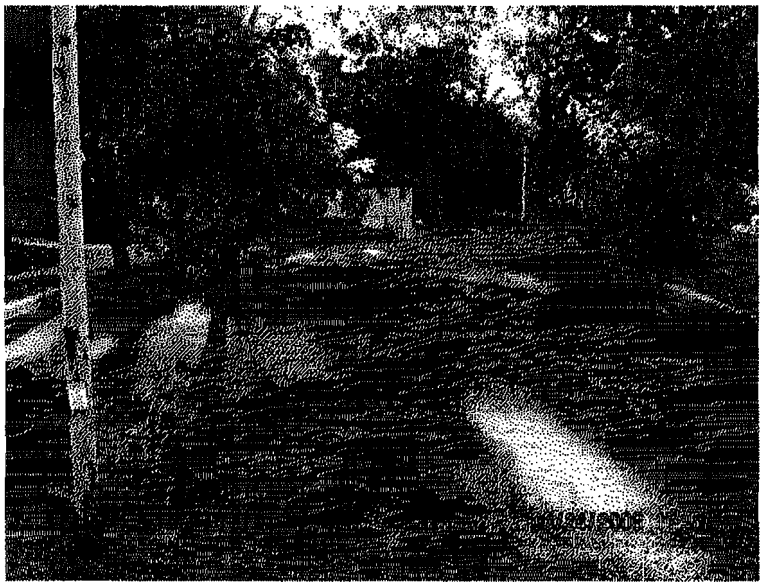

IDI 080827HWE0001 – Exhibit "A" – 2006 Yamaha Rhino UTV Side x Side – Model: YXR66FAV, 660cc – Front yard showing slope of ground and tires tracks of ride.

IDI 080827HWE0001 – Exhibit "A" – 2006 Yamaha Rhino UTV Side x Side – Model: YXR66FAV, 660cc – Front yard and tire tracks of incident.

IDI 080827HWE0001 – Exhibit "A" – 2006 Yamaha Rhino UTV Side x Side – Model: YXR66FAV, 660cc – Front yard and tire tracks of ride.

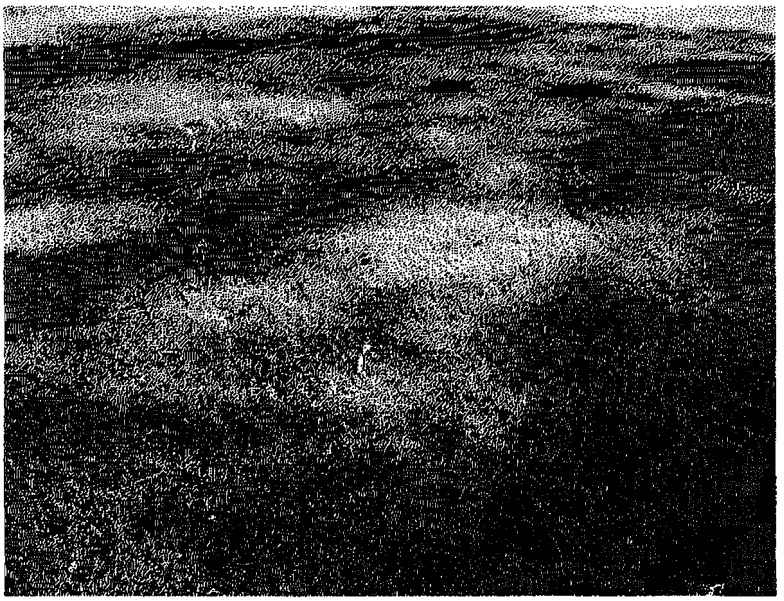

IDI 080827HWE0001 – Exhibit "A" – 2006 Yamaha Rhino UTV Side x Side – Model: YXR66FAV, 660cc – Front yard and tire tracks of incident.

IDI 080827HWE0001 – Exhibit "A" – 2006 Yamaha Rhino UTV Side x Side – Model: YXR66FAV, 660cc – Front yard and tire tracks of incident.

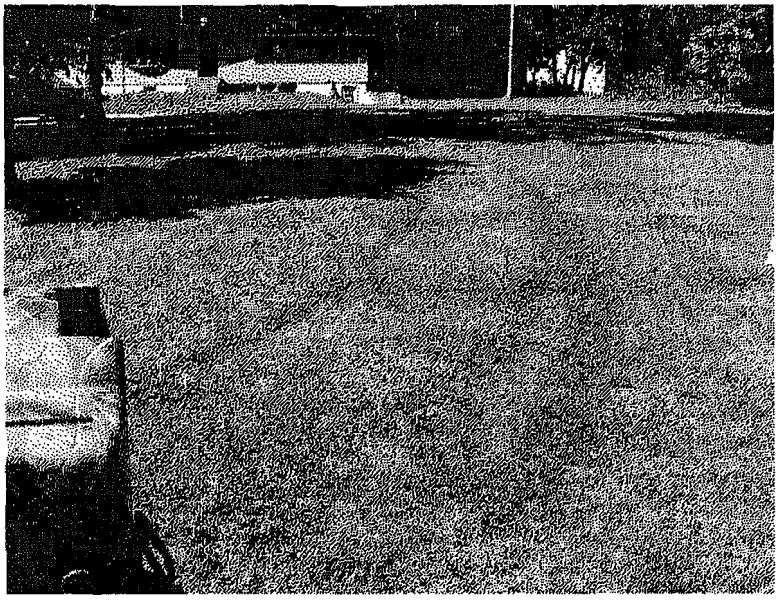

IDI 080827HWE0001 – Exhibit "A" – 2006 Yamaha Rhino Side x Side, Model: YXR66FAV – Photo taken at incident scene by police department.

IDI 080827HWE0001 – Exhibit "A" – 2006 Yamaha Rhino Side x Side, Model: YXR66FAV – Photo taken at incident scene by police department.

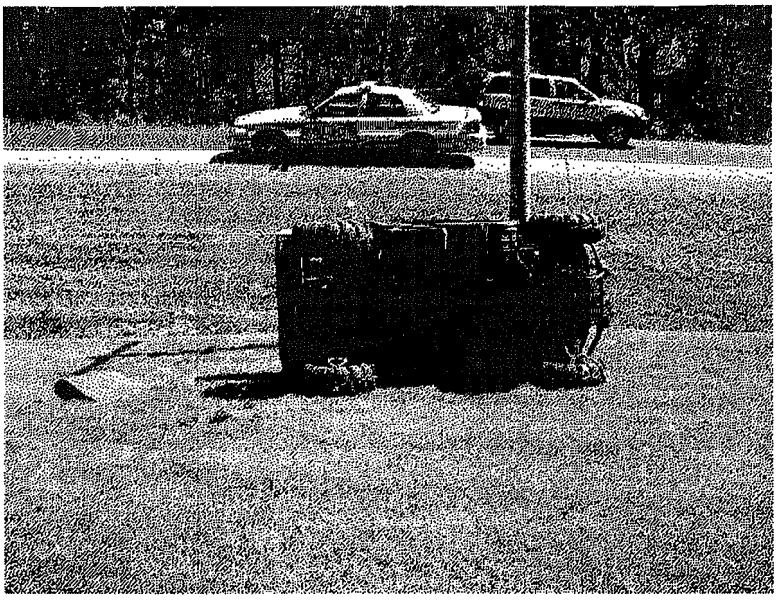

IDI 080827HWE0001 – Exhibit "A" – 2006 Yamaha Rhino Side x Side, Model: YXR66FAV – Photo taken at incident scene by police department.

IDI 080827HWE0001 – Exhibit "A" – 2006 Yamaha Rhino Side x Side, Model: YXR66FAV – Photo taken at incident scene by police department.

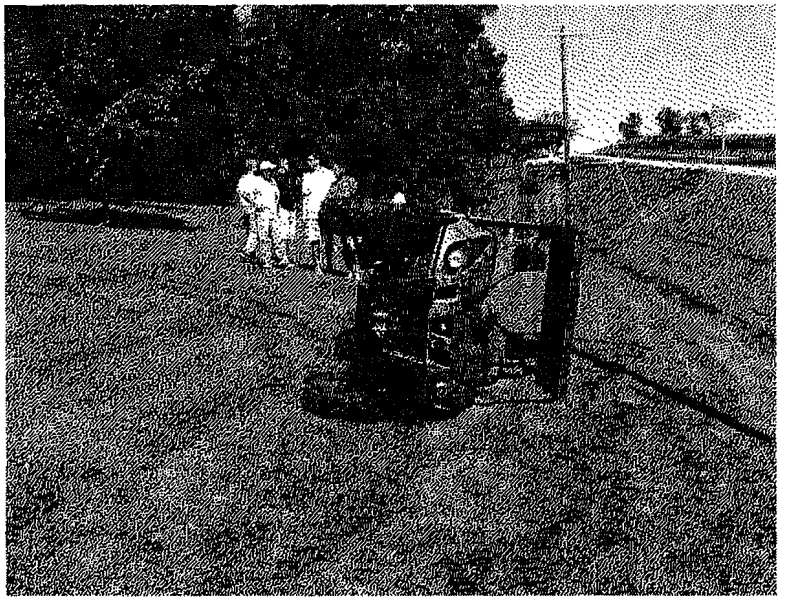

IDI 080827HWE0001 – Exhibit "A" – 2006 Yamaha Rhino Side x Side, Model: YXR66FAV – Photo taken at incident scene by police department.

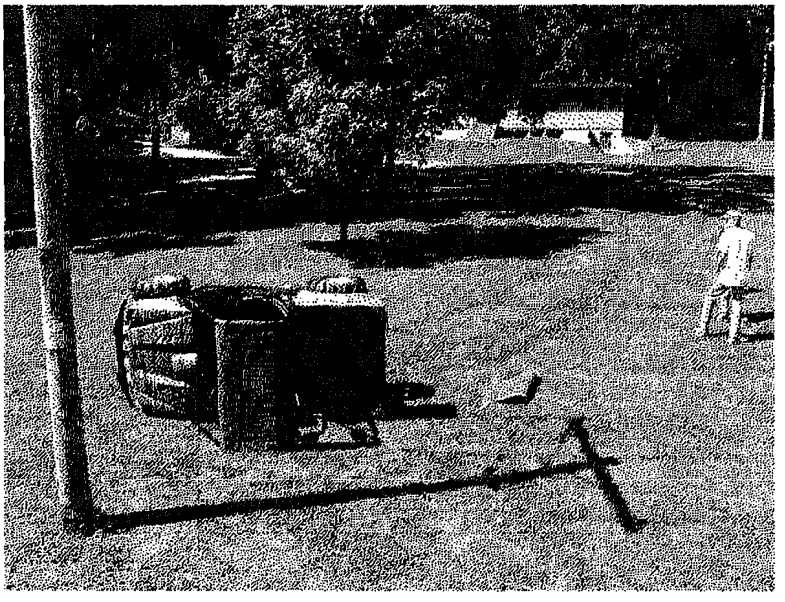

IDI 080827HWE0001 – Exhibit "A" – 2006 Yamaha Rhino Side x Side, Model: YXR66FAV – Photo taken at incident scene by police department.

IDI 080827HWE0001 - Exhibit "B" - Owner's Manual - 163 pages

IDI 080827HWE0001 - Exhibit "B"

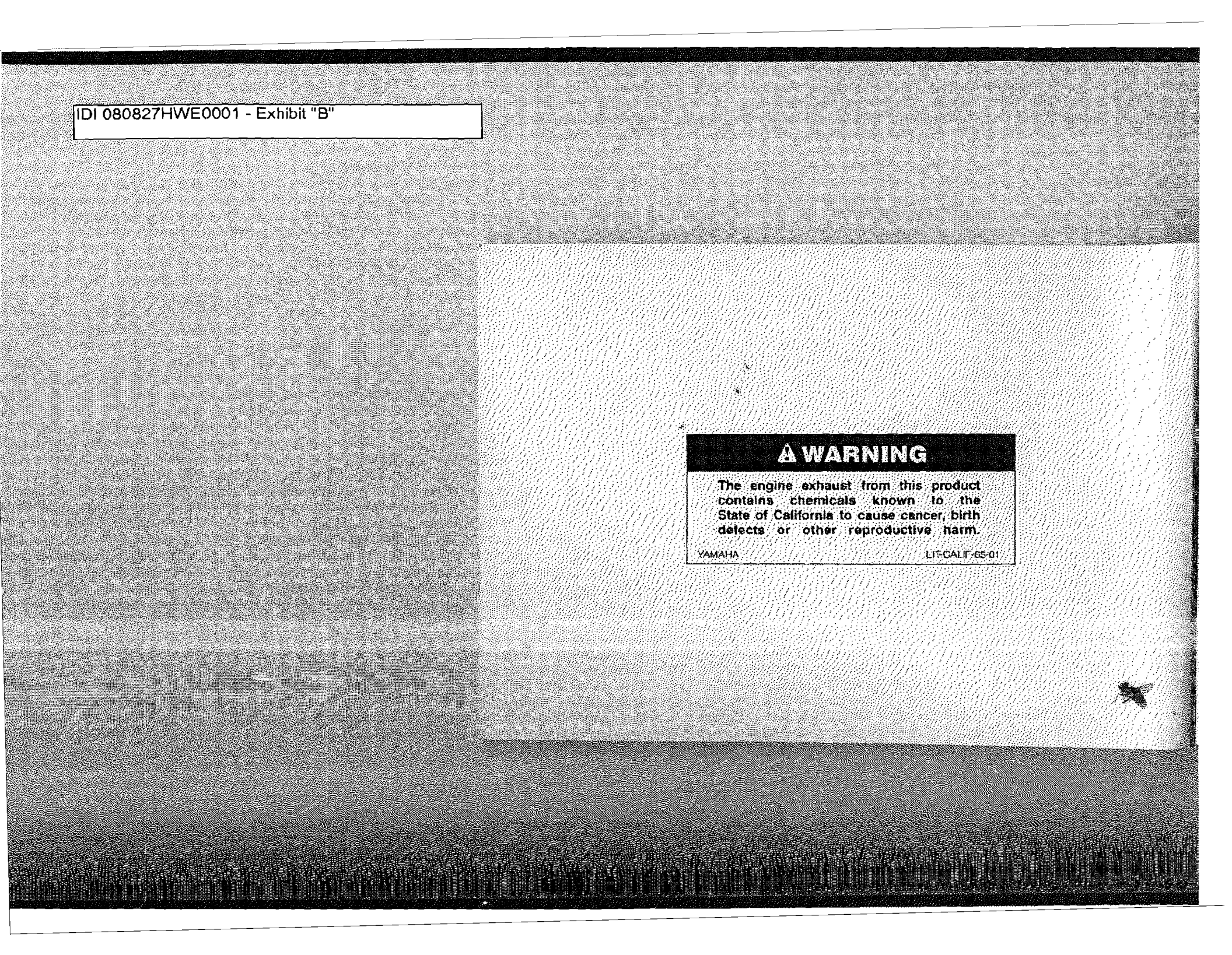

IDI 080827HWE0001 - Exhibit "B"

INTRODUCTION

Congratulations on your purchase of the Yamaha YXR66FAV. It represents the result of many years of Yamaha experience in the production of fine sporting, touring, and pace-setting racing vehicles. With the purchase of this Yamaha, you can now appreciate the high degree of craftsmanship and reliability that have made Yamaha a leader in these fields.

This manual will provide you with a good basic understanding of the features and operation of this vehicle. It also includes basic maintenance and inspection procedures. If you have any questions regarding the operation or maintenance of your vehicle, please consult a Yamaha dealer.

⚠ WARNING

Please read this manual carefully before operating this vehicle. Do not attempt to operate this vehicle until you have attained adequate knowledge of its controls and operating features. Regular inspections and careful maintenance, along with good operating techniques, will help ensure that you safely enjoy the capabilities and reliability of this vehicle.

IDI 080827HWE0001 - Exhibit "B"

IMPORTANT MANUAL INFORMATION

FAILURE TO FOLLOW THE WARNINGS CONTAINED IN THIS MANUAL CAN RESULT IN SERIOUS INJURY OR DEATH.

Particularly important information is distinguished in this manual by the following notations:

⚠	**The Safety Alert Symbol means ATTENTION! BECOME ALERT! YOUR SAFETY IS INVOLVED!**
⚠ WARNING	**Failure to follow WARNING instructions could result in severe injury or death to the vehicle operator, a bystander or a person inspecting or repairing the vehicle.**
CAUTION:	**A CAUTION indicates special precautions that must be taken to avoid damage to the vehicle.**
NOTE:	A NOTE provides key information to make procedures easier or clearer.

*Product and specifications are subject to change without notice.

IDI 080827HWE0001 - Exhibit "B"

IMPORTANT NOTICE

- This vehicle is designed and manufactured for off-road use only. It is illegal to operate this vehicle on any public street, road, or highway. Such use is prohibited by law.
- Check the laws and regulations in force before choosing where to operate this vehicle. It is illegal to operate this vehicle on public lands where vehicles its size are prohibited.
- This vehicle complies with almost all state off-highway noise level and spark arrester laws and regulations.

AFFIX DEALER

LABEL HERE

YXR66FAV
OWNER'S MANUAL
©2005 by Yamaha Motor Corporation, U.S.A.
1st edition, June 2005
All rights reserved. Any reprinting or unauthorized use without the written permission of
Yamaha Motor Corporation,
U.S.A. is expressly prohibited.
Printed in U.S.A.
P/N LIT-11626-19-41

IDI 080827HWE0001 - Exhibit "B"

CONTENTS

1 LOCATION OF THE WARNING AND SPECIFICATION LABELS 1-1

2 SAFETY INFORMATION 2-1

3 DESCRIPTION AND VEHICLE IDENTIFICATION 3-1
- Identification number records 3-3
- Key identification number 3-3
- Vehicle identification number 3-4
- Model label 3-4

4 CONTROL FUNCTIONS 4-1
- Main switch 4-1
- Indicator and warning lights 4-3
- Indicator and warning lights (special edition models) 4-6
- Multi-function meter unit (special edition models) 4-9
- Switches 4-11
- Accelerator pedal 4-15
- Brake pedal 4-16
- Parking brake lever 4-17
- Drive select lever 4-18
- Fuel tank cap 4-18
- Fuel level check window 4-19
- Starter (choke) 4-19
- Seats 4-20
- Seat belts 4-21
- Glove compartment 4-23
- Cargo bed 4-23
- Front and rear shock absorber adjustment 4-26
- Trailer hitch bracket 4-28
- Auxiliary DC jack 4-29

5 PRE-OPERATION CHECKS 5-1
- Front and rear brakes 5-2
- Fuel 5-4
- Engine oil 5-5
- Coolant 5-6
- Final gear oil 5-7
- Differential gear oil 5-7
- Accelerator pedal 5-7

IDI 080827HWE0001 - Exhibit "B"

Seat belts 5-7
Steering 5-8
Fittings and fasteners 5-8
Lights 5-8
Switches 5-8
Tires 5-8
How to measure tire pressure 5-10
Tire wear limit 5-11

6 OPERATION 6-1
Starting a cold engine 6-1
Starting a warm engine 6-3
Jump-starting 6-3
Warming up 6-5
Drive select lever operation and reverse driving 6-5
Engine break-in 6-7
Parking 6-9
Parking on a slope 6-9
Accessories and loading 6-10

7 DRIVING YOUR VEHICLE 7-1
Getting to know your vehicle 7-1
Learning to operate your vehicle 7-5
Turning your vehicle 7-6
Braking 7-7
Going uphill 7-7
Going downhill 7-9
Crossing through shallow water 7-11
Riding over rough terrain 7-13
Riding in brush or wooded areas 7-14
Encountering obstacles on the trail 7-15

8 PERIODIC MAINTENANCE AND ADJUSTMENT 8-1
Owner's manual and tool kit 8-1
Periodic maintenance/ lubrication 8-4
Hood 8-6
Console 8-8
Engine oil and oil filter cartridge 8-9
Final gear oil 8-13
Differential gear oil 8-15
Coolant 8-17

IDI 080827HWE0001 - Exhibit "B"

Axle boots 8-18
Spark plug inspection 8-20
Cleaning the air filter elements 8-22
V-belt cooling duct check hose 8-27
V-belt case drain plug 8-28
Cleaning the spark arrester 8-29
Carburetor adjustment 8-30
Idle speed adjustment 8-31
Valve clearance adjustment 8-31
Front brake pad check 8-32
Rear brake pad check 8-33
Checking the brake fluid level 8-33
Brake fluid replacement 8-34
Checking the brake pedal 8-35
Parking brake lever free play adjustment 8-36
Brake light switch adjustment 8-37
Cable inspection and lubrication ... 8-38
Brake pedal and accelerator pedal lubrication 8-39
Rear knuckle upper and lower pivot lubrication 8-39
Steering shaft lubrication 8-40
Wheel removal 8-40
Wheel installation 8-41
Battery 8-42
Battery maintenance 8-43
Fuse replacement 8-44
Replacing a headlight bulb 8-46
Headlight beam adjustment 8-49
Tail/brake light bulb replacement 8-50
Troubleshooting 8-52
Troubleshooting charts 8-53

9 CLEANING AND STORAGE 9-1
A. Cleaning 9-1
B. Storage 9-3

10 SPECIFICATIONS 10-1

11 NOISE REGULATION 11-1

12 MAINTENANCE RECORD 12-1

IDI 080827HWE0001 - Exhibit "B"

13 YAMAHA MOTOR CORPORATION, U.S.A. SIDE x SIDE VEHICLE LIMITED WARRANTY 13-1

14 YAMAHA EXTENDED SERVICE (Y.E.S.) 14-1

IDI 080827HWE0001 - Exhibit "B"

LOCATION OF THE WARNING AND SPECIFICATION LABELS

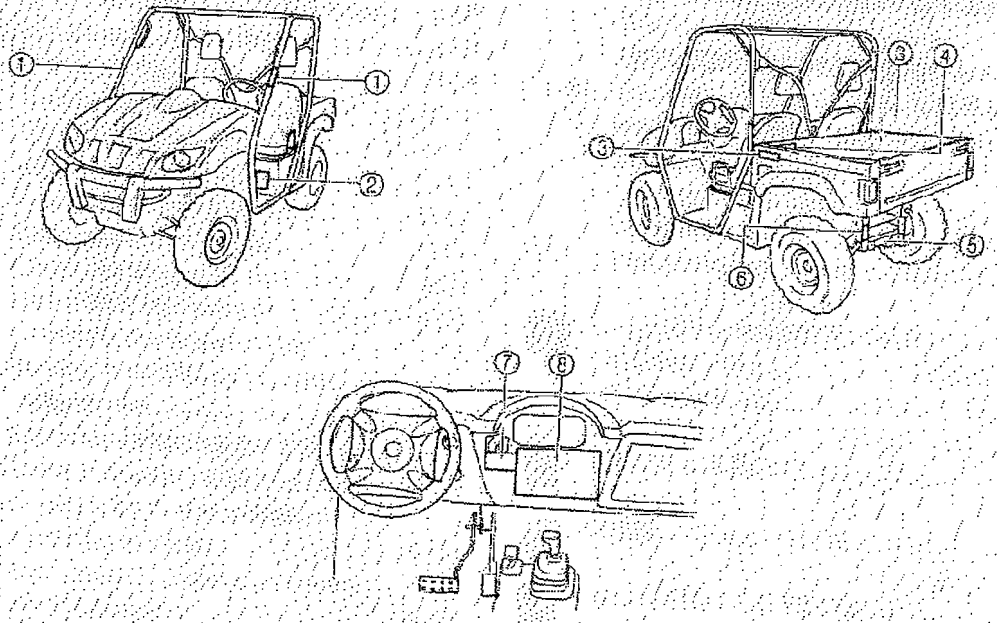

IDI 080827HWE0001 - Exhibit "B"

Read and understand all of the labels on your vehicle. They contain important information for safe and proper operation of your vehicle.

Never remove any labels from your vehicle. If a label becomes difficult to read or comes off, a replacement label is available from your Yamaha dealer.

①

⚠ WARNING

The enclosure cannot protect occupants in all foreseeable accidents, including rollover.

YAMAHA 5UG-K8483-00

②

⚠ WARNING

IMPROPER TIRE PRESSURE OR OVERLOADING CAN CAUSE LOSS OF CONTROL.
LOSS OF CONTROL CAN RESULT IN SEVERE INJURY OR DEATH.
OPERATING TIRE PRESSURE: Set with tires cold.

RECOMMENDED:	FRONT:	70kPa,	{.70kgf/cm},	10psi
	REAR:	98kPa,	{.98kgf/cm},	14psi
MINIMUM:	FRONT:	63kPa,	{.63kgf/cm},	9psi
	REAR:	91kPa,	{.91kgf/cm},	13psi

Never set tire pressure below minimum. Tire may dislodge from rim.
Gross Vehicle Weight Rating: 907 kg (2000lb) maximum including weight of operator, passenger, accessories, cargo, and (if applicable) trailer tongue weight.

YAMAHA 5UG-F1696-01

IDI 080827HWE0001 - Exhibit "B"

③

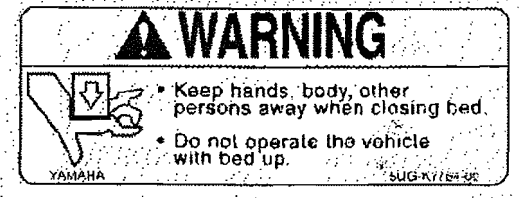

④

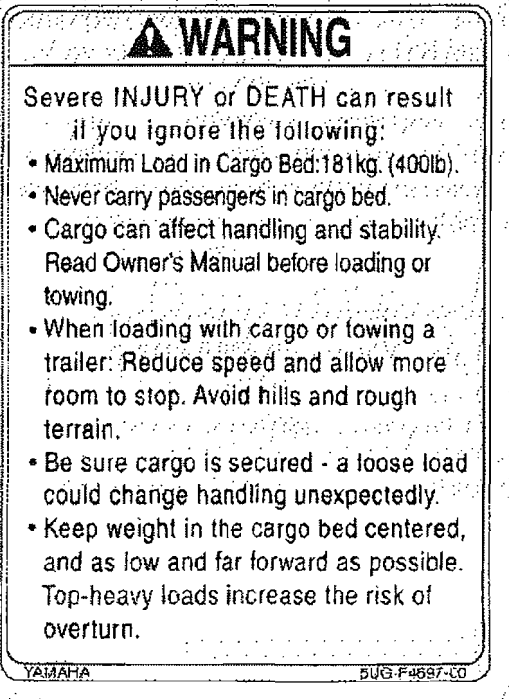

IDI 080827HWE0001 - Exhibit "B"

⑤

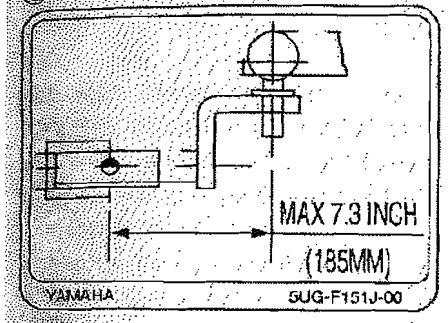

⑥

⚠ WARNING

Improperly loading a trailer and failure to use extra care when pulling trailer can cause an accident or injury. Never load more than 50kg (110 lbs) tongue weight on the towing bracket. Do not tow more than 550kg (1212 lbs) rolling weight (trailer plus cargo). Operate in low-range gears only, allow for increased braking distance, and use extreme caution when operating on inclines. Read carefully the loading information and trailer hitch sections in the owner's manual.

YAMAHA 5UG-F151K-02

IDI 080827HWE0001 - Exhibit "B"

⑦

⚠ WARNING

Turning the off road vehicle in 4WD-LOCK ("DIFF.LOCK") takes more effort.

Operate at a slow speed and allow extra time and distance for maneuvers to avoid loss of control.

SUG-F1558-00

⑧

⚠ WARNING

Improper use can result in Severe INJURY or DEATH.

This off-highway utility vehicle will handle and maneuver differently from an ordinary passenger car or other vehicle.

- Vehicle capacity: 1 operator and 1 passenger. Passenger must be able to reach and hold the handgrip inside enclosure.
- This vehicle is recommended only for operators 16 and older with a valid motor vehicle license. Adults must supervise use by minors. Check state laws for minimum age requirements.
- Gross Vehicle Weight Rating: 2000 lb (907 kg) maximum including operator, passenger, accessories, cargo and trailer tongue weight.
- Passenger and cargo can affect vehicle handling.

ALWAYS

- wear a seat belt when riding in the vehicle.
- keep your hands and feet inside the vehicle at all times-watch for branches, brush, or other hazards that could enter the vehicle.
- drive straight up and down inclines-driving across the side of an incline increase the risk of overturn.

NEVER

- operate through water deeper than 13" (33cm) or fast flowing water-if you must cross shallow, slow moving water, choose your path carefully to avoid sharp drop-offs, large rocks, or slippery surfaces that could cause the vehicle to overturn.
- make sharp, high-speed turns-the vehicle could roll over or go out of control.

ALWAYS USE AN APPROVED HELMET AND PROTECTIVE GEAR

NEVER USE ON PUBLIC ROADS OR PAVEMENT

NEVER USE WITH DRUGS OR ALCOHOL

LOCATE AND READ THE OWNER'S MANUAL. FOLLOW ALL INSTRUCTIONS AND WARNINGS.

YAMAHA

SUC-F1568-01

SAFETY INFORMATION

This off-highway utility vehicle handles differently from other vehicles including cars and ATVs. SEVERE INJURY OR DEATH can result if you do not follow these instructions:

- Read this manual and all labels carefully and follow the operating procedures described.
- This vehicle is designed to carry the driver and one passenger. Never carry passengers in the cargo bed.
- Always be sure the driver and passenger are wearing seat belts.
- Never give a ride to a passenger who is too small to reach and hold the handgrip on the enclosure.
- Always avoid operating the vehicle on any paved surfaces, including sidewalks, driveways, parking lots, and streets.
- Never operate this vehicle on any public street, road, or highway, even a dirt or gravel one.
- Never operate this vehicle without wearing an approved motorcycle helmet that fits properly. You should also wear eye protection (goggles or a face shield), gloves, over-the-ankle boots, long-sleeved shirt or jacket, and long pants.
- Never consume alcohol or drugs before or while operating this vehicle.
- Never operate at speeds too fast for your skills or the conditions. Always go at a speed that is proper for the terrain, visibility, operating conditions, and your experience.
- Never attempt jumps or other stunts.

IDI 080827HWE0001 - Exhibit "B"

- Always inspect your vehicle each time you use it to be sure it is in safe operating condition. Always follow the inspection and maintenance procedures and schedules described in this manual.
- Always keep both hands, arms, feet, and legs inside the vehicle at all times during operation. Keep your feet on the floorboard. Never hold onto the enclosure except when using the handgrip inside the enclosure. Otherwise, your hand could be injured if it is caught between the enclosure and an obstacle outside the vehicle.
- Always keep both hands on the steering wheel when driving.
- Never wrap your thumbs and fingers around the steering wheel. This is particularly important when driving in rough terrain. The front wheels will move right and left as they respond to the terrain, and this movement will be felt in the steering wheel. A sudden jolt could wrench the steering wheel around, and your thumbs or fingers could be injured if they are in the way of the steering wheel spokes.
- Always go slowly and be extra careful when operating on unfamiliar terrain. Always be alert to changing terrain conditions when driving the vehicle.
- Never operate on excessively rough, slippery, or loose terrain until you have learned and practiced the skills necessary to control the vehicle on such terrain. Always be especially cautious on these kinds of terrain.
- Never turn at excessive speed. Practice turning at slow speeds before attempting to turn at faster speeds. Do not attempt turns on steep inclines.
- Never operate the vehicle on hills that are too steep for it or for your abilities. Go straight up and down hills where possible. Maximum slope angle: 15°

- Never operate on hills that are slippery or ones where you will not be able to see far enough ahead of you. Never go over the top of a hill at speed if you cannot see what is on the other side.
- Always follow proper procedures for going uphill. If you lose momentum and cannot continue up a hill, back down the hill with the engine in reverse gear. Use engine braking to help you go slowly. If necessary, use the brakes gradually to help you go slowly.
- Always check terrain carefully before going down hills. Go as slowly as possible. Never go down a hill at high speed.
- Always check for obstacles before operating in a new area.
- Never operate the vehicle in fast flowing water or water deeper than the floorboards on this model. Remember that wet brakes may have reduced stopping ability. Test your brakes after leaving water. If necessary, apply them several times to let friction dry out the linings.
- Always be sure there are no obstacles or people behind you when you operate in reverse. When it is safe to proceed in reverse, go slowly. Do not brake abruptly when carrying loads in the cargo bed.
- Always use the size and type of tires specified in this manual.
- Always maintain proper tire pressure as described in this manual.
- Never exceed the stated load capacity. Cargo should be as far forward in the bed as possible, and distributed evenly from side to side. Be sure cargo is secured so that it cannot move around during operation. Reduce speed and follow instructions in this manual for carrying cargo or pulling a trailer. Allow greater distance for braking.

IDI 080827HWE0001 - Exhibit "B"

⚠ WARNING

POTENTIAL HAZARD

Improper handling of gasoline.

WHAT CAN HAPPEN

Gasoline can catch fire and you could be burned.

HOW TO AVOID THE HAZARD

Always turn off the engine when refueling. Do not refuel right after the engine has been running and is still very hot. Do not spill gasoline on the engine or exhaust pipe/muffler when refueling. Never refuel while smoking, or while in the vicinity of sparks, open flames, or other sources of ignition such as the pilot lights of water heaters and clothes dryers.

When transporting the vehicle in another vehicle, be sure it is kept in an upright position. Otherwise, fuel may leak out of the carburetor or fuel tank.

WHAT CAN HAPPEN

Gasoline is poisonous and can cause injuries.

HOW TO AVOID THE HAZARD

If you should swallow some gasoline or inhale a lot of gasoline vapor, or get some gasoline in your eyes, see your doctor immediately. If gasoline spills on your skin, wash with soap and water. If gasoline spills on your clothing, change your clothes.

IDI 080827HWE0001 - Exhibit "B"

⚠ WARNING

POTENTIAL HAZARD

Starting or running the engine in a closed area.

WHAT CAN HAPPEN

Exhaust fumes are poisonous and may cause loss of consciousness and death within a short time.

HOW TO AVOID THE HAZARD

Always operate your vehicle in an area with adequate ventilation.

IDI 080827HWE0001 - Exhibit "B"

DESCRIPTION AND VEHICLE IDENTIFICATION

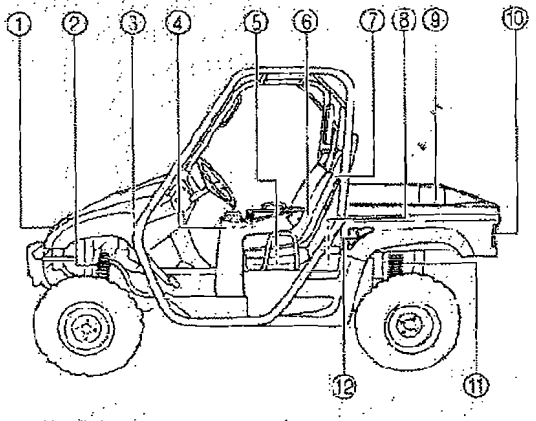

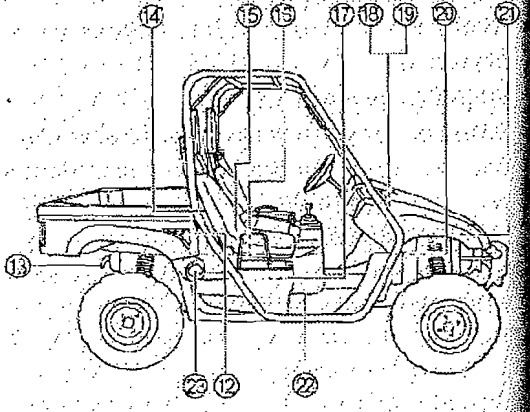

1. Headlights
2. Front shock absorber assembly adjusting ring
3. Brake fluid reservoir
4. Air filter element (engine and air intake duct)
5. V-belt case
6. Driver seat
7. Driver seat belt
8. Spark plug
9. Cargo bed
10. Tail/brake lights
11. Rear shock absorber assembly adjusting ring
12. Cargo bed release levers
13. Spark arrester
14. Passenger seat belt
15. Passenger seat
16. Oil filter cartridge
17. Engine oil dipstick
18. Battery
19. Fuses
20. Coolant reservoir
21. Radiator cap
22. Fuel level check window
23. Fuel tank cap

IDI 080827HWE0001 - Exhibit "B"

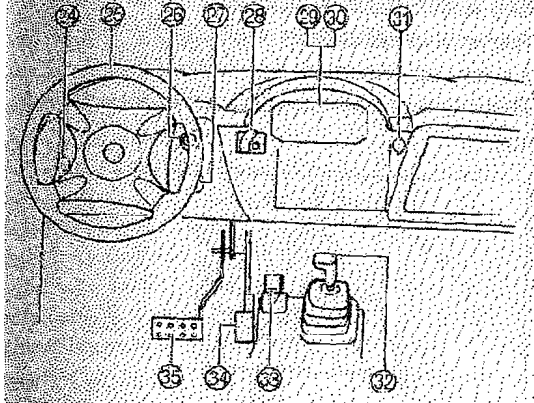

24. Light switch
25. Steering wheel
26. Starter (choke)
27. Main switch
28. On-Command four-wheel drive and differential gear lock switches
29. Indicator and warning lights
30. Multi-function meter unit (special edition models)
31. Auxiliary DC jack
32. Drive select lever
33. Parking brake lever
34. Accelerator pedal
35. Brake pedal

NOTE:

The vehicle you have purchased may differ slightly from those shown in the figures of this manual.

IDI 080827HWE0001 - Exhibit "B"

Identification number records

Record the key identification number, vehicle identification number and model label information in the spaces provided for assistance when ordering spare parts from a Yamaha dealer or for reference in case the vehicle is stolen.

1. KEY IDENTIFICATION NUMBER:

2. VEHICLE IDENTIFICATION NUMBER:

3. MODEL LABEL INFORMATION:

Key identification number

The key identification number is stamped on the key as shown in the following illustration. This number can be used for ordering a new key.

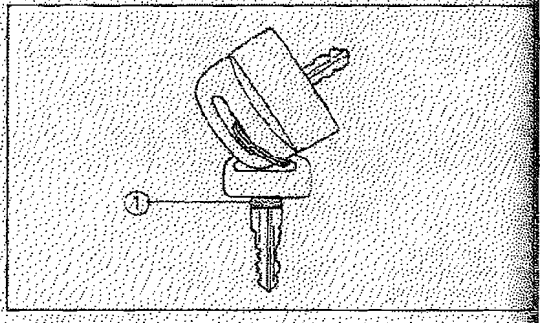

1 Key identification number

Vehicle identification number

The vehicle identification number is stamped into the frame.

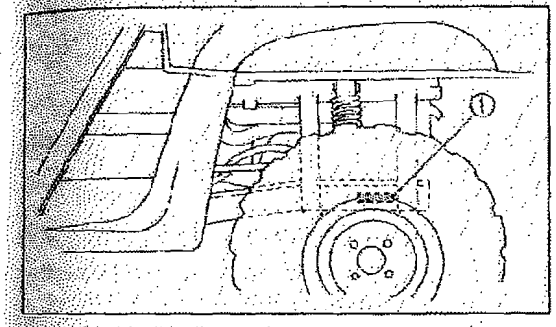

1. Vehicle identification number

NOTE:

The vehicle identification number is used to identify your vehicle.

Model label

The model label is affixed to the location in the illustration. Record the information on this label in the space provided. This information will be needed to order spare parts from your Yamaha dealer.

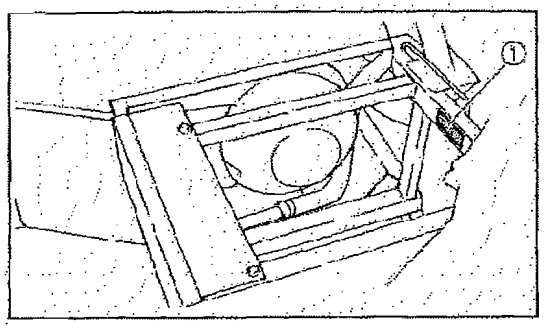

1. Model label

IDI 080827HWE0001 - Exhibit "B"

CONTROL FUNCTIONS

Main switch

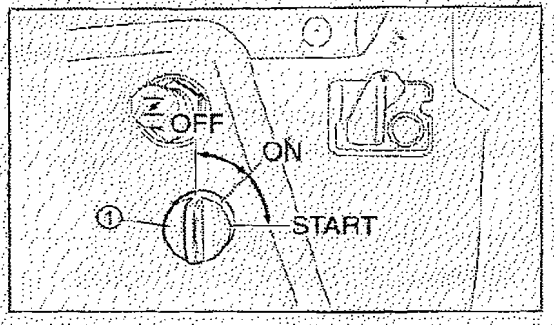

1. Main switch

Functions of the respective switch positions are as follows:

ON:
All electrical circuits are supplied with power and the headlights and taillights come on when the light switch is on.

OFF:
All electrical circuits are switched off. The key can be removed in this position.

START:
The electric starter is engaged by turning and holding the key in this position. Release the key when the engine starts.

IDI 080827HWE0001 - Exhibit "B"

CAUTION:

- **Do not operate the electric starter continuously for more than 5 seconds, or starter damage could occur. Wait at least 5 seconds between each operation of the electric starter to let it cool.**
- **Do not turn the key to the "START" position with the engine running, or damage to the electric starter can result.**
- **See starting instructions prior to starting the engine. (See pages 6-1–6-3 for details.)**

IDI 080827HWE0001 - Exhibit "B"

Indicator and warning lights

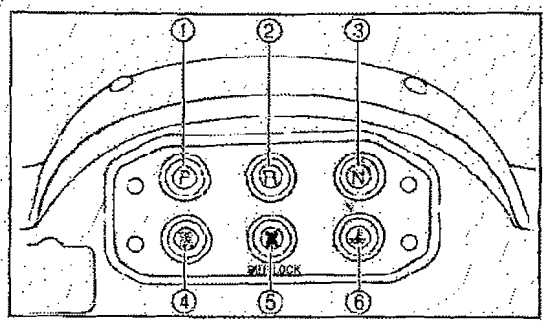

1. Parking brake indicator light "P"
2. Reverse indicator light "R"
3. Neutral indicator light "N"
4. Four-wheel-drive indicator light "4WD"
5. Differential gear lock indicator light "DIFF LOCK"
6. Coolant temperature warning light "

Parking brake indicator light "P"

This indicator light comes on when the park ing brake is applied.

Reverse indicator light "R"

This indicator light comes on when the drive select lever is in the "R" reverse position.

NOTE:

If the indicator light flashes while riding, have a Yamaha dealer check the speed sensor cir cuit.

Neutral indicator light "N"

This indicator light comes on when the drive select lever is in the "N" position.

IDI 080827HWE0001 - Exhibit "B"

Four-wheel-drive indicator light "4WD"
This indicator light comes on when the "2WD/4WD" switch is in the "4WD" position.

NOTE:
Due to the synchronizing mechanism in the differential gear case, the light may not come on until the vehicle starts moving.

Differential gear lock indicator light "LOCK"
This indicator light comes on when the differential gear lock switch is set to the "LOCK-4WD" position.

Coolant temperature warning light "TEMP"
When the coolant temperature reaches a specified level, this light comes on to warn that the coolant temperature is too hot. If the light comes on during operation, stop the engine as soon as it is safe to do so and allow the engine to cool down for about 10 minutes.

CAUTION:

- **The engine may overheat if the vehicle is overloaded. If this happens, reduce the load to specification.**
- **After restarting, make sure that the light is out. Continuous use while the light is on may cause damage to the engine.**

IDI 080827HWE0001 - Exhibit "B"

Coolant temperature warning light checking method

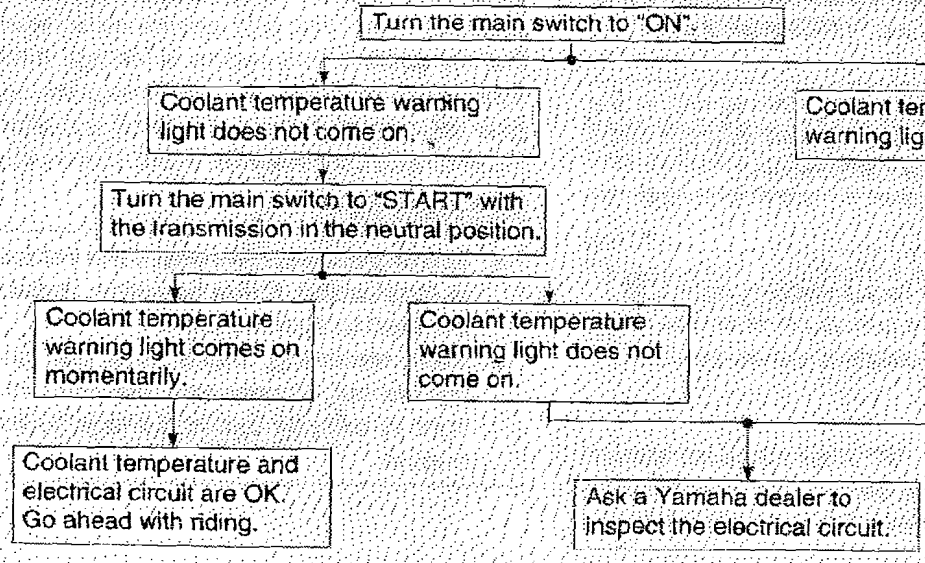

Indicator and warning lights (special edition models)

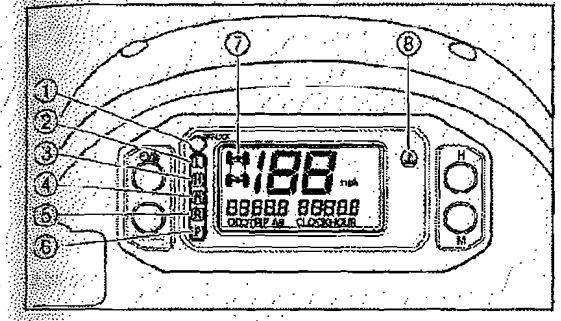

1. Differential gear lock indicator light "DIFF. LOCK"
2. Low-range indicator light "L"
3. High-range indicator light "H"
4. Neutral indicator light "N"
5. Reverse indicator light "R"
6. Parking brake indicator light "P"
7. Four-wheel-drive indicator "4H" "4L"
8. Coolant temperature warning light

Differential gear lock indicator light "DIFF. LOCK"

This indicator light and the differential gear lock indicator in the display come on when the differential gear lock switch is set to the "4WD-LOCK" position.

NOTE:

When the switch is set to "LOCK", the differential gear lock indicator light will flash until the differential gear is locked.

Low-range indicator light "L"

This indicator light comes on when the drive select lever is in the "L" position.

High-range indicator light "H"

This indicator light comes on when the drive select lever is in the "H" position.

IDI 080827HWE0001 - Exhibit "B"

Neutral indicator light "N"
This indicator light comes on when the drive select lever is in the "N" position.

Reverse indicator light "R"
This indicator light comes on when the drive select lever is in the "R" reverse position.

NOTE:
If the indicator light flashes while riding, have a Yamaha dealer check the speed sensor circuit.

Parking brake indicator light "P"
This indicator light comes on when the parking brake is applied.

Four-wheel-drive indicator "2WD"/"4WD"
This indicator comes on when the "2WD"/"4WD" switch is set to the "4WD" position. The differential gear lock indicator "DIFF.LOCK" in the four-wheel-drive indicator also comes on when the "LOCK"-"4WD" switch is set to the "4WD-LOCK" position.

NOTE:
Due to the synchronizing mechanism in the differential gear case, the four-wheel drive indicator may not come on until the vehicle starts moving.

Coolant temperature warning light "E"
When the coolant temperature reaches a specified level, this light comes on to warn that the coolant temperature is too hot. If the light comes on during operation, stop the engine as soon as it is safe to do so and allow the engine to cool down for about 10 minutes.

IDI 080827HWE0001 - Exhibit "B"

CAUTION:

- **The engine may overheat if the vehicle is overloaded. If this happens, reduce the load to specification.**
- **After restarting, make sure that the light is out. Continuous use while the light is on may cause damage to the engine.**

IDI 080827HWE0001 - Exhibit "B"

Multi-function meter unit (special edition models)

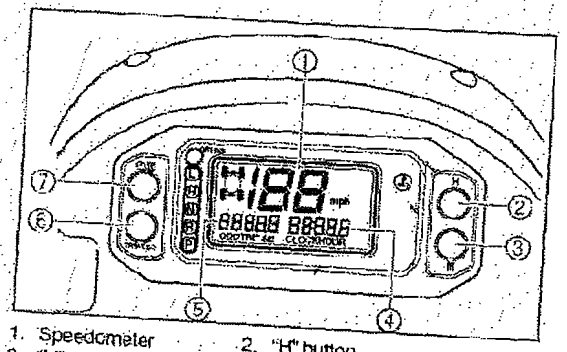

1. Speedometer
2. "H" button
3. "M" button
4. Clock/Hour meter
5. Odometer/Tripmeter A/Tripmeter B
6. "TRIP/ODO" button
7. Clock/Hour button

The multi-function meter unit is equipped with the following:

- a speedometer (which shows the riding speed)
- an odometer (which shows the total distance traveled)
- two tripmeters (which show the distance traveled since they were last set to zero)
- a clock
- an hour meter (which shows the total time the key has been turned to "ON")

distance
zero)
tal time

Odometer and tripmeter modes

Pushing the "TRIP/ODO" button switches the display between the odometer mode "ODO" and the tripmeter modes "A" and "B" in the following order:

ODO→TRIP A→TRIP B→ODO

To reset a tripmeter, select it by pushing the "TRIP/ODO" button, and then push the "TRIP/ODO" button for at least three seconds. The tripmeters can be used to estimate the distance that can be traveled with a full tank of fuel. This information will enable you to plan future fuel stops.

NOTE:

Holding in the "TRIP/ODO" button and then turning the key to "ON" switches the display between "mph" and "km/h".

Clock mode

Pushing the "◴"/"⊠" button switches the display between the clock mode "CLOCK" and the hour meter mode "HOUR" in the following order:

CLOCK→HOUR→CLOCK

To set the clock

1. Set the display to the clock mode.
2. Push the "◴"/"⊠" button until the clock starts flashing.
3. Set the hours by pushing the "H" button.
4. Set the minutes by pushing the "M" button.
5. Push the "◴"/"⊠" button, and then release it to start the clock.

IDI 080827HWE0001 - Exhibit "B"

Switches

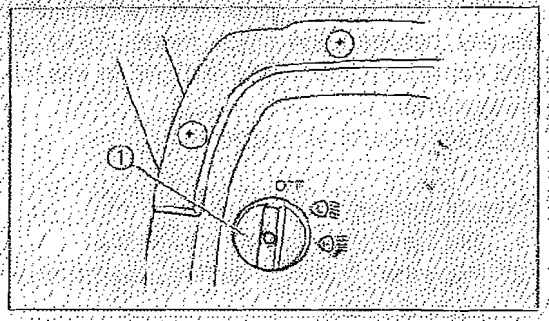

1. Light switch "OFF/≡D/≡D"

Light switch "OFF/≡D/≡D"

Set the switch to "≡D" to turn on the low beam and the taillights.

Set the switch to "≡D" to turn on the high beam and the taillights.

Set the switch to "OFF" to turn off all the lights.

CAUTION:

Do not use the headlights with the engi turned off for an extended period of tim The battery may discharge to the poi that the starter motor will not operat properly. If this should happen, remov the battery and recharge it.

IDI 080827HWE0001 - Exhibit "B"

On-Command four-wheel drive and differential gear lock switches

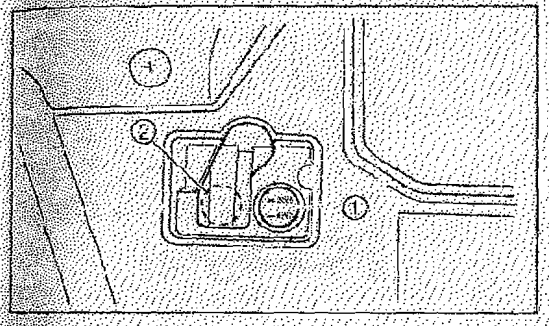

1. On-Command four-wheel drive switch "2WD"/"4WD"
2. Differential gear lock switch "LOCK"/"4WD"

This vehicle is equipped with an On-Command four-wheel drive switch "2WD"/"4WD" and a differential gear lock switch "LOCK"/"4WD". Select the appropriate drive according to terrain and the conditions.

- Two-wheel drive ("2WD"): Power is supplied to the rear wheels only.
- Four-wheel drive ("4WD"): Power is supplied to the rear and front wheels.
- Four-wheel drive with the differential gear locked ("4WD-LOCK"): Power is supplied to the rear and front wheels when the differential gear is locked ("DIFF LOCK"). Unlike the 4WD mode, all wheels turn at the same speed regardless of traction.

IDI 080827HWE0001 - Exhibit "B"

⚠ WARNING

POTENTIAL HAZARD

Changing from 2WD to 4WD or from 4WD to 4WD-LOCK ("DIFF.LOCK"), or vice-versa while the vehicle is moving.

WHAT CAN HAPPEN

The vehicle handles differently in 2WD than in 4WD and in 4WD-LOCK in some circumstances. Changing from 2WD to 4WD or from 4WD to 4WD-LOCK, or vice-versa while moving may cause the vehicle to unexpectedly handle differently. This could distract the operator and increase the risk of losing control and an accident.

HOW TO AVOID THE HAZARD

Always stop the vehicle before changing from 2WD to 4WD or from 4WD to 4WD-LOCK, or vice-versa.

On-Command four-wheel drive switch "2WD"/"4WD"

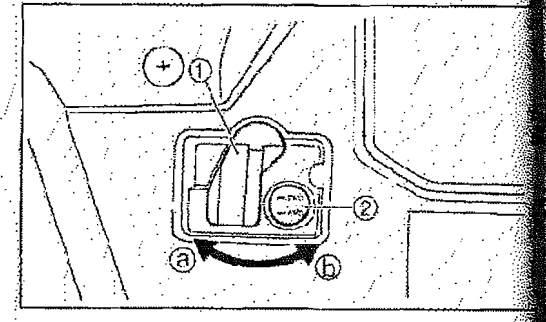

1. Lever
2. On-Command four-wheel drive switch "2WD"/"4WD"

To change from 2WD to 4WD, stop the vehicle, and then set the switch to "4WD". When the vehicle is in 4WD, the four-wheel-drive indicator light "⌘" or, for special edition models, the four-wheel-drive indicator "⌘" on the multi-function meter unit display will come on. To change from 4WD to 2WD, stop the vehicle, be sure the lever is set to position ⓐ, and then set the switch to "2WD".

IDI 080827HWE0001 - Exhibit "B"

Switch differential gear lock switch "LOCK"/ "4WD"

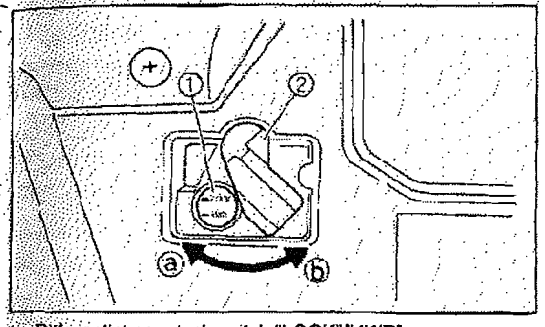

1. Differential gear lock switch "LOCK"/"4WD"
2. Lever

To lock the differential gear in 4WD, stop the vehicle, make sure the On-Command four-wheel-drive switch is set to "4WD", move the lever to position ⓑ, and then set the switch to "LOCK". When the differential gear is locked, the differential gear lock indicator light "" or, for special edition models, the differential gear lock indicator light "DIFF.LOCK" and the differential gear lock indicator "" on the multi-function meter unit display will come on. To release the differential gear lock, stop the vehicle and set the switch to "4WD".

⚠ WARNING

POTENTIAL HAZARD

Riding too fast while the vehicle is in 4WD-LOCK.

WHAT CAN HAPPEN

All wheels turn at the same speed when the differential is locked, so it takes more effort to turn the vehicle. The amount of effort required is greater the faster you go. You may lose control and have an accident if you cannot make a sharp enough turn for the speed you are traveling.

HOW TO AVOID THE HAZARD

Always ride at a slow speed when the vehicle is in 4WD-LOCK, and allow extra time and distance for maneuvers.

IDI 080827HWE0001 - Exhibit "B"

NOTE:

- If the differential gear lock is not engaging properly, turn the steering wheel back and forth to help it engage.
- Riding before the differential gear lock is properly engaged will cause the engine speed to be limited until engagement is complete.

For special edition models:

- When the switch is set to "LOCK", the differential gear lock indicator light will flash until the differential gear is locked.
- When the indicator light is flashing, turning the steering wheel back and forth will help the differential gear lock to engage.
- Riding before the differential gear lock is properly engaged (e.g., when the indicator light is flashing) will cause the engine speed to be limited until engagement is complete.

Accelerator pedal

Press the accelerator pedal down to increa engine speed. Spring pressure returns t pedal to the rest position when released. ways check that the accelerator pedal retur normally before starting the engine.

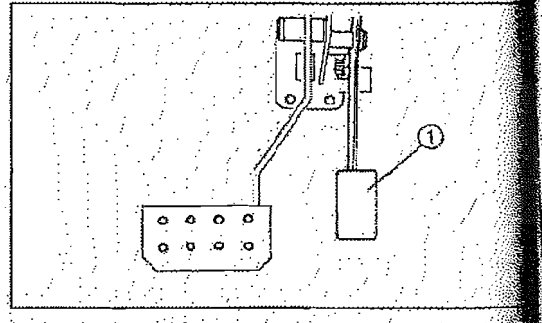

1. Accelerator pedal

Before starting the engine, check the accelerator pedal to be sure it is operating smoothly. Make sure the accelerator pedal fully returns to the idle position as soon as it is released.

⚠ WARNING

POTENTIAL HAZARD

Malfunction of the accelerator pedal.

WHAT CAN HAPPEN

The accelerator pedal could be hard to operate, making it difficult to speed up or slow down when you need to. This could cause an accident.

HOW TO AVOID THE HAZARD

Check the operation of the accelerator pedal before you start the engine. If it does not work smoothly, check for the cause. Correct the problem before operating the vehicle. Consult a Yamaha dealer if you can't find or solve the problem yourself.

Brake pedal

Press the brake pedal to slow or stop the vehicle.

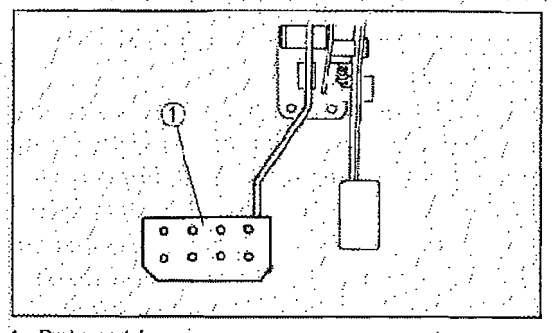

1. Brake pedal

IDI 080827HWE0001 - Exhibit "B"

Parking brake lever

The parking brake lever is located at the right side of the driver's seat. It will help hold the vehicle from moving while parked.

To set the parking brake, pull the lever up completely.

To release the parking brake, pull up on the lever, press the release button, and then push the lever all the way down. Spring pressure helps return the lever to the released position.

Be sure to fully release the parking brake before starting out. Failure to do so may result in poor performance and premature wearing of the rear brake and V-belt.

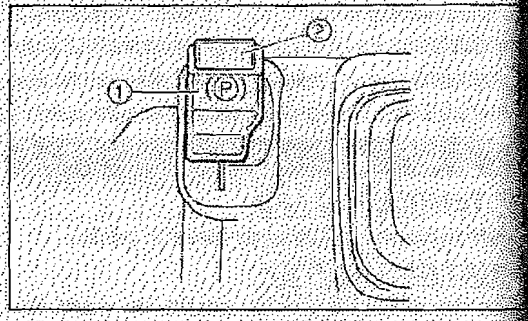

1. Parking brake lever 2. Release button

IDI 080827HWE0001 - Exhibit "B"

Drive select lever

The drive select lever is used to shift your vehicle into the low, high, neutral and reverse positions. (Refer to pages 6-5-6-7 for the drive select lever operation.)

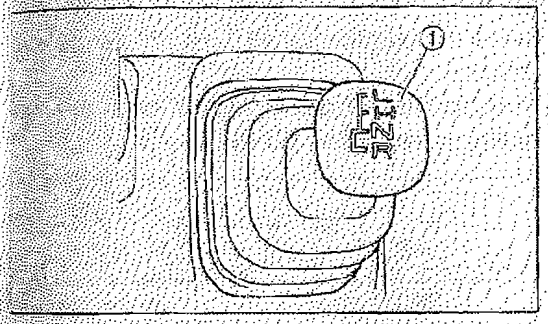

1. Drive select lever

Fuel tank cap

Remove the fuel tank cap by turning it counterclockwise.

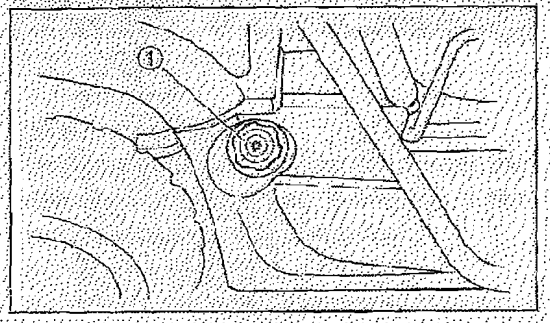

1. Fuel tank cap

IDI 080827HWE0001 - Exhibit "B"

Fuel level check window

The amount of fuel in the fuel tank can be checked through the fuel level check window. If the fuel level is low, refuel as soon as possible.

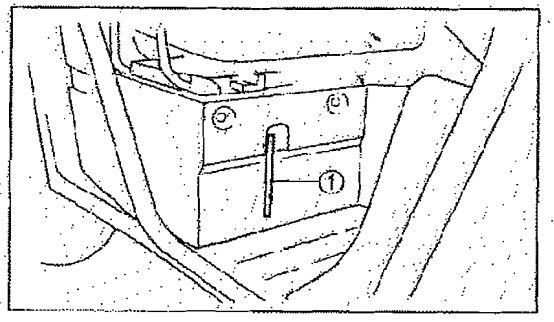

1. Fuel level check window

Starter (choke) "⌇"

Starting a cold engine requires a richer air-fu mixture. A separate starter circuit supplies th mixture.

Move in direction ⓐ to turn on the star (choke).

Move in direction ⓑ to turn off the star (choke).

Refer to "Starting a cold engine" for proper o eration. (See pages 6-1–6-3.)

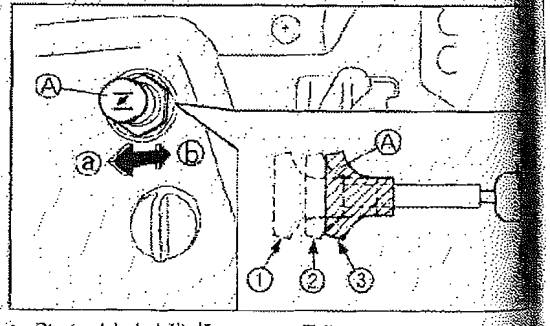

A. Starter (choke) "⌇"
1. Fully open
2. Half open
3. Closed

Seats

To remove a seat, pull its seat lock lever upward, lift the front of the seat, and then slide the seat forward and up.

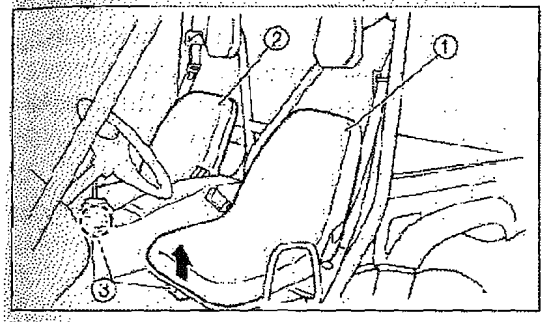

1. Driver seat
2. Passenger seat
3. Seat lock lever (× 2)

To install a seat, insert the projections on the rear of the seat into the seat holders and push down on the seat at the front.

⚠ WARNING

POTENTIAL HAZARD

A loose seat.

WHAT CAN HAPPEN

The operator could lose control or the operator or passenger could fall if the seat is loose during operation.

HOW TO AVOID THE HAZARD

Make sure the seat is securely latched.

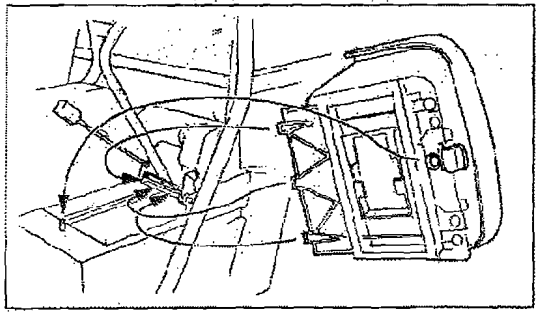

IDI 080827HWE0001 - Exhibit "B"

Seat belts

This vehicle is equipped with three-point seat belts for both the operator and passenger. Always wear the seat belt while riding in the vehicle.

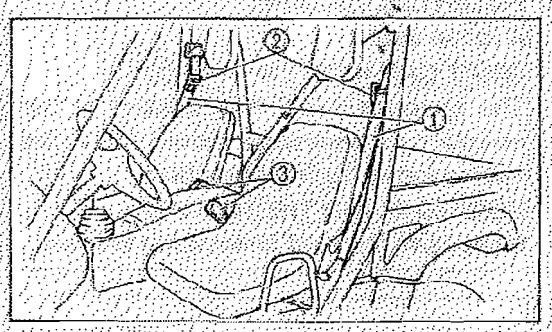

1. Seat belt (× 2)
2. Latch plate (× 2)
3. Buckle (× 2)

To wear the seat belt properly, do the following:

1. Hold the latch plate as you pull the b across your lap and chest. Make sure t belt is not twisted and is not caught any portion of the vehicle, your clothin or any equipment you are carrying.
2. Push the latch plate into the buckle until clicks. Pull up on the latch plate to ma sure it is secure.

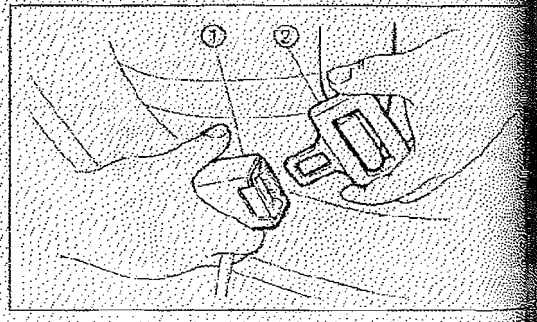

1. Buckle
2. Latch plate

IDI 080827HWE0001 - Exhibit "B"

3. Put the lap portion of the belt low on your hips. Push down on the buckle end of the belt as you pull up on the shoulder part so the belt is snug across your hips.
4. Position the shoulder belt over your shoulder and across your chest. The shoulder belt should fit against your chest. If it is loose, pull the belt out all the way and then let it retract.
5. To release the buckle, firmly press the release button.

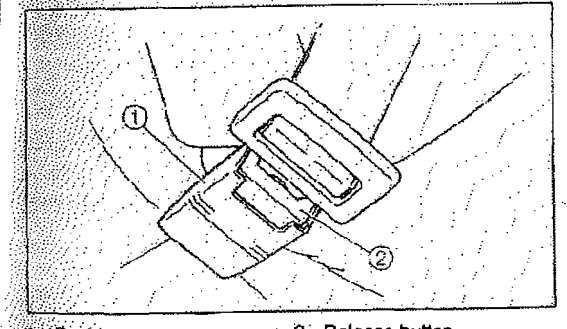

1. Buckle 2. Release button

⚠ WARNING

POTENTIAL HAZARD

Not wearing the seat belt.

Wearing the seat belt improperly.

WHAT CAN HAPPEN

There is increased risk of being killed or seriously injured in an accident.

HOW TO AVOID THE HAZARD

Always wear your seat belt when riding in the vehicle.

Be sure the seat belt is close-fitting across your hips and chest and is latched securely.

IDI 080827HWE0001 - Exhibit "B"

Glove compartment

CAUTION:

To protect from damage, do not put metal products, like tools or sharply edged products directly in the glove compartment. If they must be stored, wrap them in appropriate cushion material.

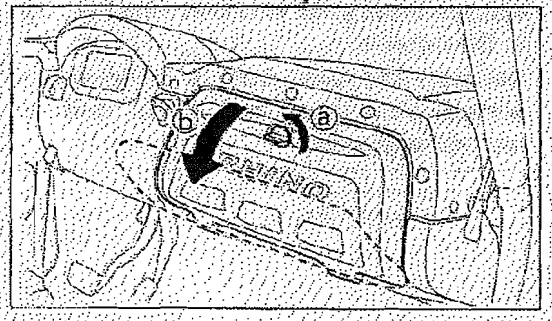

a. Unlock b. Open

Cargo bed

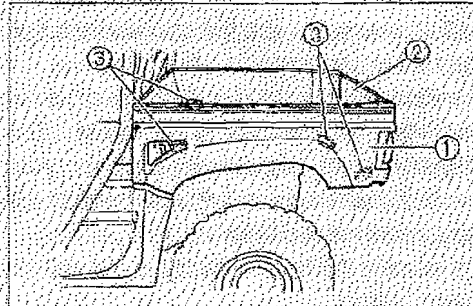

1. Cargo bed 2. Tailgate
3. Cargo hook (× 4)

Opening and closing the tailgate

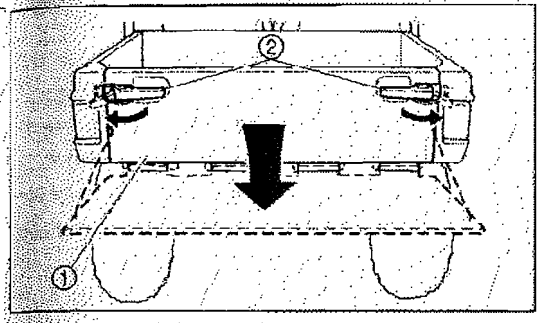

1. Tailgate 2. Latch (× 2)

To open

Unhook the latches, and then lower the tailgate.

To close

Place the tailgate in the original position, and then hook the latches.

Lifting and lowering the cargo bed

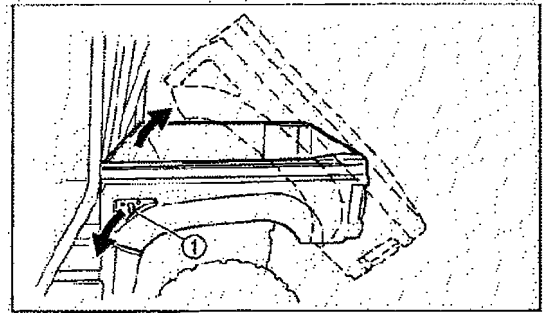

1. Cargo bed release lever

To lift

Push down the cargo bed release lever on the left or right side of the vehicle, and then slowly lift up the cargo bed until it stops.

To lower

Lower the cargo bed slowly to its original position and be sure the it is locked into place.

Maximum load limit: 181 kg (400 lb)

IDI 080827HWE0001 - Exhibit "B"

⚠ WARNING

POTENTIAL HAZARD

Pinch points.

WHAT CAN HAPPEN

You or someone else could be pinched between the cargo bed and the frame when the bed is being lowered.

HOW TO AVOID THE HAZARD

Before closing the bed, be sure others are standing away from the vehicle. Keep hands and fingers away from the pinch points between the bed and the frame.

⚠ WARNING

POTENTIAL HAZARD

Overloading the cargo bed

WHAT CAN HAPPEN

Could cause changes in vehicle han dling which could lead to an accident.

HOW TO AVOID THE HAZARD

Never exceed the stated maximum loa limit for this cargo bed.

Cargo should be properly distribute and securely attached.

Reduce speed when carrying cargo. Al low greater distance for braking.

IDI 080827HWE0001 - Exhibit "B"

⚠ WARNING

POTENTIAL HAZARD

Carrying a passenger in the cargo bed

WHAT CAN HAPPEN

The passenger could fall, be thrown out, or be struck by objects in the cargo bed.

HOW TO AVOID THE HAZARD

Never carry a passenger in the cargo bed. This cargo bed is designed to carry cargo only.

Front and rear shock absorber adjustment

The spring preload can be adjusted to suit the operating conditions.

You can reduce preload for a softer ride, or increase preload if frequent bottoming occurs.

CAUTION:

Frequent or severe bottoming can cause increased wear or damage to the vehicle.

Adjust the spring preload as follows.

To increase the spring preload, turn the adjusting ring in direction ⓐ.

To decrease the spring preload, turn the adjusting ring in direction ⓑ.

IDI 080827HWE0001 - Exhibit "B"

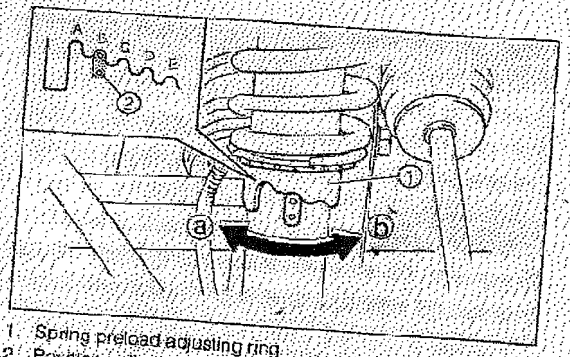

1. Spring preload adjusting ring
2. Position indicator

NOTE:
A special wrench can be obtained at a Yamaha dealer to make this adjustment.

Standard position: B
A- Minimum (soft)
E- Maximum (hard)

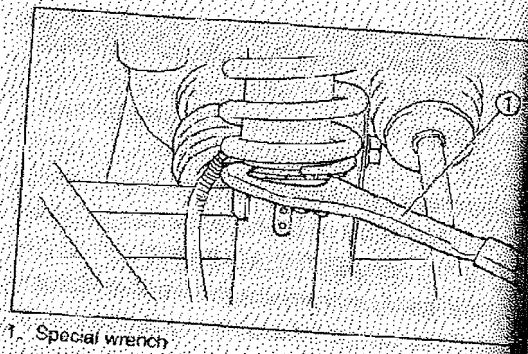

1. Special wrench

⚠ WARNING

POTENTIAL HAZARD

Improper shock absorber adjustment.

WHAT CAN HAPPEN

Uneven adjustment can cause poor handling and loss of stability, which could lead to an accident.

HOW TO AVOID THE HAZARD

Always adjust the shock absorbers on the left and right side to the same setting.

Trailer hitch bracket

This vehicle is equipped with a 5 cm (2 in) receiver bracket for a standard trailer hitch. Trailer towing equipment can be obtained at a Yamaha dealer. (See pages 6-11–6-13 for precaution information.)

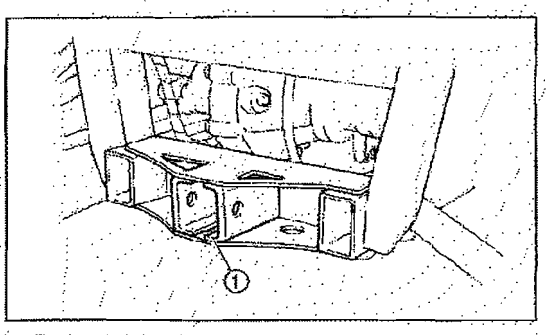

1. Trailer hitch bracket

IDI 080827HWE0001 - Exhibit "B"

Auxiliary DC jack

The auxiliary DC jack is located at the right side of the front panel.

The auxiliary DC jack can be used for suitable work lights, radios, etc.

The auxiliary DC jack should only be used when the engine is running.

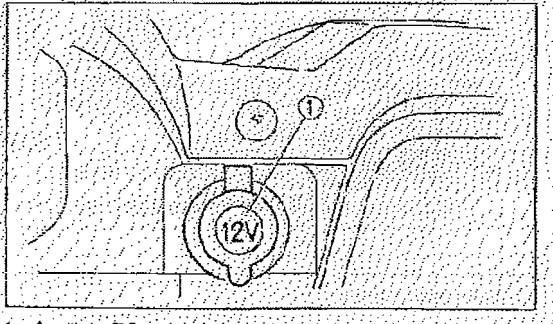

1 Auxiliary DC jack cap

1. Set the light switch to "OFF".
2. Start the engine. (See pages 6-1–6-3.)
3. Open the auxiliary DC jack cap, and then insert the accessory power plug into the jack.

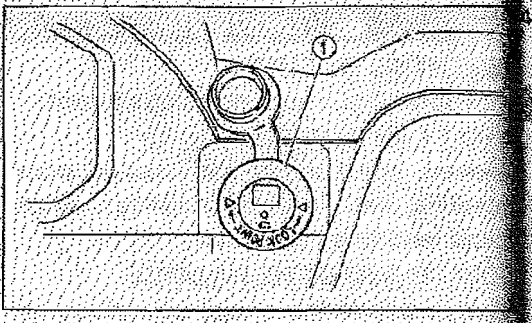

1. Auxiliary DC jack

Maximum rated capacity for the auxiliary DC jack:
DC 12 V, 120 W (10 A)

IDI 080827HWE0001 - Exhibit "B"

4. When the auxiliary DC jack is not being used, cover it with the cap.

- **Do not use accessories requiring more than the above maximum capacity. This may overload the circuit and cause the fuse to blow.**
- **If accessories are used without the engine running or with the headlights turned on, the battery will lose its charge and engine starting may become difficult.**
- **Do not use an automotive cigarette lighter or other accessories with a plug that gets hot because the jack can be damaged.**

IDI 080827HWE0001 - Exhibit "B"

PRE-OPERATION CHECKS

Before using this vehicle, check the following points:

ITEM	ROUTINE	PAGE
Brakes	• Check operation, free play, fluid level and fluid leakage. • Fill with DOT 4 brake fluid if necessary.	5-2–5-3, 8-32–8-35
Parking brake	• Check for proper operation, condition and free play	8-36–8-37
Fuel	• Check fuel level. • Fill with fuel if necessary.	5-4–5-5
Engine oil	• Check oil level. • Fill with oil if necessary.	5-5, 8-9–8-12
Coolant reservoir	• Check coolant level. • Fill with coolant if necessary.	5-6, 8-17–8-18
Final gear oil/ Differential gear oil	• Check for leakage.	5-7, 8-13–8-16
Accelerator pedal	• Check for proper accelerator pedal operation.	5-7
Seat belts	• Check for proper operation and belt wear.	5-7
Steering	• Check for proper operation.	5-8
Fittings and fasteners	• Check all fittings and fasteners.	5-8
Lights and switches	• Check for proper operation.	5-8, 8-46–8-51
Wheels and tires	• Check tire pressure, wear and damage.	5-8–5-11, 8-40–8-43
Axle boots	• Check for damage.	8-18–8-19

IDI 080827HWE0001 - Exhibit "B"

⚠ WARNING

POTENTIAL HAZARD

Failure to inspect the vehicle before operating. Failure to properly maintain the vehicle.

WHAT CAN HAPPEN

Increases the possibility of an accident or equipment damage.

HOW TO AVOID THE HAZARD

Always inspect your vehicle each time you use it to make sure the vehicle is in safe operating condition. Always follow the inspection and maintenance procedures and schedules described in the Owner's Manual.

Front and rear brakes

Brake pedal

Check for correct brake pedal free play. If the brake pedal free play is incorrect, have a Yamaha dealer adjust it. (See page 8-35.)

Check the operation of the brake pedal. It should move smoothly and there should be a firm feeling when the brakes are applied. If not, have the vehicle inspected by a Yamaha dealer.

5

Brake fluid level

Check the brake fluid level.

Add fluid if necessary. (See pages 8-33–8-34.)

Recommended brake fluid: DOT 4

IDI 080827HWE0001 - Exhibit "B"

Brake fluid leakage
Check to see if any brake fluid is leaking out of the pipe joints or the brake fluid reservoir. Apply the brakes firmly for one minute. If there is any leakage, have the vehicle inspected by a Yamaha dealer.

Brake operation
Test the brakes at slow speed after starting out to make sure they are working properly. If the brakes do not provide proper braking performance, inspect the brake system. (See pages 8-32–8-35.)

⚠ WARNING

POTENTIAL HAZARD
Driving with improperly operatin brakes.
WHAT CAN HAPPEN
You could lose braking ability, whic could lead to an accident.
HOW TO AVOID THE HAZARD
Always check the brakes at the start o every ride. Do not operate the vehicle you find any problem with the brakes. a problem cannot be corrected by th adjustment procedures provided in thi manual, have the vehicle inspected by Yamaha dealer.

Fuel

Make sure there is sufficient gasoline in the tank.

Recommended fuel:
UNLEADED GASOLINE ONLY
Fuel tank capacity:
30.0 L (6.60 Imp gal, 7.93 US gal)

NOTICE

Use only unleaded gasoline. The use of leaded gasoline will cause severe damage to internal engine parts, such as the valves and piston rings, as well as to the exhaust system.

Your Yamaha engine has been designed to use regular unleaded gasoline with a pump octane number ([R+M]/2) of 86 or higher, or research octane number of 91 or higher. If knocking or pinging occurs, use a different brand of gasoline or premium unleaded fuel. Unleaded fuel will give you longer spark plug life and reduced maintenance cost.

Gasohol

There are two types of gasohol; gasohol containing ethanol and that containing methanol. Gasohol containing ethanol can be used if ethanol content does not exceed 10%. Gasohol containing methanol is not recommended by Yamaha because it may cause fuel system damage or vehicle performance problems.

IDI 080827HWE0001 - Exhibit "B"

⚠ WARNING

POTENTIAL HAZARD

Improper care when refueling.

WHAT CAN HAPPEN

Fuel can spill, which can cause a fire and severe injury.

Fuel expands when it heats up. If the fuel tank is overfilled, fuel could spill out due to heat from the engine or the sun.

HOW TO AVOID THE HAZARD

Do not overfill the fuel tank. Be careful not to spill fuel, especially on the engine or exhaust pipe. Wipe up any spilled fuel immediately. Be sure the fuel tank cap is closed securely.

Engine oil

Make sure the engine oil is at the specif level. Add oil as necessary. (See pages 8- 8-12.)

CAUTION:

- **In order to prevent clutch slippa (since the engine oil also lubrica the clutch), do not mix any chemi additives. Do not use oils with a die specification of "CD" or oils of a hig er quality than specified. In additi do not use oils labeled "ENER CONSERVING II" or higher.**
- **Make sure that no foreign material e ters the crankcase.**

Recommended engine oil type and quantity:
See page 10-2.

IDI 080827HWE0001 - Exhibit "B"

Coolant

Check the coolant level in the coolant reservoir when the engine is cold. (The coolant level will vary with engine temperature.) The coolant level is satisfactory if it is between the minimum and maximum level marks on the coolant reservoir. If the coolant level is at or below the minimum level mark, add additional coolant to bring the level up to maximum level mark. If coolant is not available, add distilled water. Change the coolant every two years. (See pages 8-17–8-18 for details.)

CAUTION:

Hard water or salt water is harmful to the engine. You may use soft water if you cannot get distilled water.

Coolant reservoir capacity
(up to the maximum level mark):
0.35 L (0.31 Imp qt, 0.37 US qt)

⚠ WARNING

POTENTIAL HAZARD

Removing the radiator cap when the engine and radiator are still hot.

WHAT CAN HAPPEN

You could be burned by hot fluid and steam blown out under pressure.

HOW TO AVOID THE HAZARD

Wait for the engine to cool before removing the radiator cap. Always use a thick rag over the cap. Allow any remaining pressure to escape before completely removing the cap.

IDI 080827HWE0001 - Exhibit "B"

Final gear oil
Make sure the final gear oil is at the specified level. Add oil as necessary. (See pages 8-13–8-14 for details.)

Recommended oil:
SAE 80 API GL-4 Hypoid gear oil

If desired, an SAE 80W90 hypoid gear oil may be used for all conditions.

NOTE:
GL-4 is a quality and additive rating, GL-5 or GL-6 rated hypoid gear oils may also be used.

Differential gear oil
Make sure the differential gear oil is at the specified level. Add oil as necessary. (See pages 8-15–8-16 for details.)

Recommended oil:
SAE 80 API GL-4 Hypoid gear oil

Accelerator pedal
Check to see that the accelerator pedal op ates correctly. It must operate smoothly a fully spring back to the idle position when leased. Have a Yamaha dealer repair as n essary for proper operation.

Seat belts
Make sure that both seat belts are not fray or damaged.
The seat belt must move smoothly wh pulled out and retract on its own when leased. The latch plate should click secur into the buckle and release when the relea button is pushed firmly. Wash off any dirt mud which could affect operation. Have Yamaha dealer repair as necessary for prop operation.

IDI 080827HWE0001 - Exhibit "B"

Steering

Park on level ground. Turn the steering wheel right and left. Check for excessive free play, abnormal noises, or a rough feeling. Have a Yamaha dealer repair as necessary for proper operation.

Fittings and fasteners

Always check the tightness of chassis fittings and fasteners before a ride. Take the vehicle to a Yamaha dealer or refer to the Service Manual for correct tightening torque.

Lights

Check the headlights and tail/brake lights to make sure they are in working condition. Repair as necessary for proper operation.

Switches

Check the operation of all switches. Have a Yamaha dealer repair as necessary for proper operation.

Tires

⚠ WARNING

POTENTIAL HAZARD

Operating this vehicle with improper tires, or with improper or uneven tire pressure.

WHAT CAN HAPPEN

Use of improper tires on this vehicle, or operation of this vehicle with improper or uneven tire pressure, may cause loss of control, increasing your risk of accident.

HOW TO AVOID THE HAZARD

1. **The tires listed below have been approved by Yamaha Motor Manufacturing corporation of America for this model. Other tire combinations are not recommended.**

	Manufacturer	Size	Type
Front	MAXXIS	25 × 8-12NHS	M951Y
Rear	MAXXIS	25 × 10-12NHS	M952Y

IDI 080827HWE0001 - Exhibit "B"

2. The tires should be set to the recommended pressure:

- Recommended tire pressure
  Front 70 kPa (0.70 kgf/cm^2, 10 psi)
  Rear 98 kPa (0.98 kgf/cm^2, 14 psi)

Check and adjust tire pressures when the tires are cold.

Tire pressures must be equal on both sides.

3. Tire pressure below the minimum specified could cause the tire to dislodge from the rim under severe riding conditions. The following are minimums:
   Front 63 kPa (0.63 kgf/cm^2, 9 psi)
   Rear 91 kPa (0.91 kgf/cm^2, 13 psi)

4. Use no more than the following pressures when seating the tire beads.
   Front 250 kPa (2.5 kgf/cm^2, 36 psi)
   Rear 250 kPa (2.5 kgf/cm^2, 36 psi)
   Higher pressures may cause the tire to burst. Inflate the tires very slowly and carefully. Fast inflation could cause the tire to burst.

IDI 080827HWE0001 - Exhibit "B"

How to measure tire pressure

Use the tire pressure gauge.

NOTE:

The tire pressure gauge is included as standard equipment. Make two measurements of the tire pressure and use the second reading. Dust or dirt in the gauge could cause the first reading to be incorrect.

Set pressure with tires cold.

Set tire pressures to the following specifications:

	Recommended pressure	Minimum	Maximum
Front	70 kPa (0.70 kgf/cm^2, 10 psi)	63 kPa (0.63 kgf/cm^2, 9 psi)	77 kPa (0.77 kgf/cm^2, 11 psi)
Rear	98 kPa (0.98 kgf/cm^2, 14 psi)	91 kPa (0.91 kgf/cm^2, 13 psi)	105 kPa (1.05 kgf/cm^2, 15 psi)

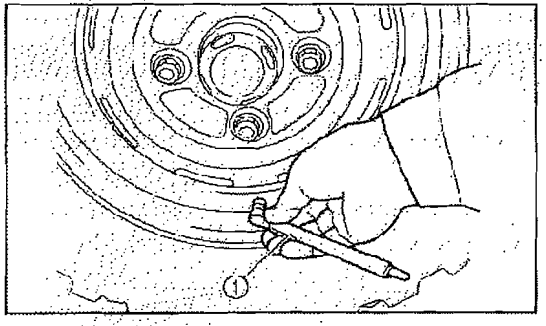

1. Tire pressure gauge

IDI 080827HWE0001 - Exhibit "B"

Tire wear limit

When the tire groove decreases to 3 mm (0.12 in) due to wear, replace the tire.

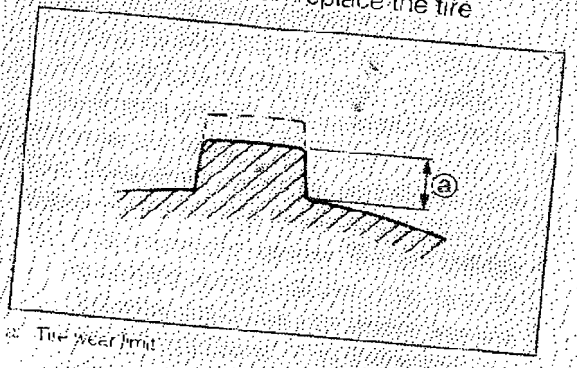

a Tire wear limit

IDI 080827HWE0001 - Exhibit "B"

OPERATION

⚠ WARNING

POTENTIAL HAZARD
Operating vehicle without being familiar with all controls.
WHAT CAN HAPPEN
Loss of control, which could cause an accident or injury.
HOW TO AVOID THE HAZARD
Read the Owner's Manual carefully. If there is a control or function you do not understand, ask your Yamaha dealer.

Starting a cold engine

⚠ WARNING

POTENTIAL HAZARD
Freezing control cables in cold weather.
WHAT CAN HAPPEN
You could be unable to control the vehicle, which could lead to an accident or collision.
HOW TO AVOID THE HAZARD
When riding in cold weather, always make sure all control cables work smoothly before you begin riding.

1. Apply the brake.
2. Shift the drive select lever into the neutral position.

IDI 080827HWE0001 - Exhibit "B"

NOTE:

- When the drive select lever is in the neutral position, the neutral indicator light should come on. If the neutral indicator light does not come on, ask a Yamaha dealer to inspect the electric circuit.
- The engine can be started in any gear if the brake is applied. However, it is recommended to shift into neutral before starting the engine.

3. Use the starter (choke) in reference to the figure:

Position ① : Cold engine start-ambient temperature below 5 °C (40 °F).

Position ② : Cold engine start-ambient temperature at 0 °C (30 °F)–30 °C (90 °F) and warming up position.

Position ③ : Cold engine start-ambient temperature ab 25 °C (80 °F) and warm eng start position.

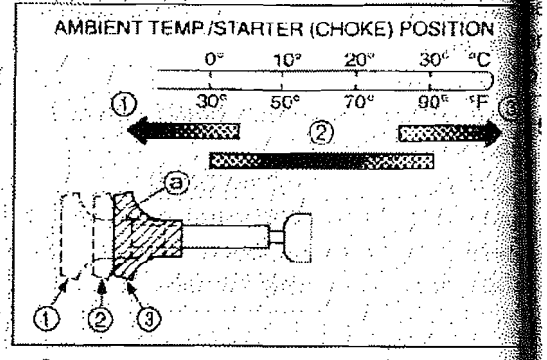

a. Starter (choke)
1. Fully open
2. Half open
3. Closed

4. With your foot off the accelerator ped start the engine by turning the key "START".

NOTE:
If the engine fails to start, release the key, and then try starting again. Wait a few seconds before the next attempt. Each cranking should be as short as possible to preserve battery energy. Do not crank the engine more than 5 seconds on each attempt.

5. If the engine is started with the starter (choke) in position ①, the starter (choke) should be returned to position ② to warm up the engine. If the engine is started with the starter (choke) in position ②, keep the starter (choke) in this position to warm up the engine.
6. Continue warming up the engine until it idles smoothly and return the starter (choke) to position ③ before riding.

[redacted]

See the "Engine break-in" section prior to operating the engine for the first time.

Starting a warm engine
To start a warm engine, refer to the "Starting a cold engine" section. The starter (choke) should not be used. Press the accelerator pedal slightly.

Jump-starting
Jump-starting the vehicle should be avoided. The battery should be removed and charged instead. (See pages 8-42–8-43 for battery removal and installation procedures.) However, if the vehicle must be jump-started, proceed as follows.

1. Turn the key to "OFF".
2. Open the hood. (See pages 8-6–8-7 for hood opening and closing procedures.)
3. Remove the battery compartment cover.

IDI 080827HWE0001 - Exhibit "B"

4. Using a charged 12 V battery, connect the positive lead of the jumper cable to the positive terminal of the battery in the vehicle and the other end of the positive lead to the positive terminal of the charged battery.

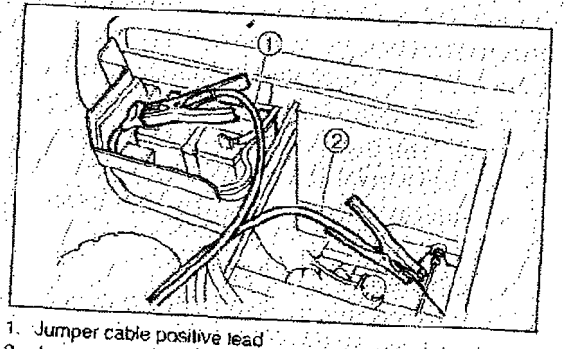

1. Jumper cable positive lead
2. Jumper cable negative lead

5. Connect the negative lead of the jumper cable to the negative terminal of the charged battery and the other end of the negative lead to an unpainted metal surface of the vehicle.

⚠ WARNING

Do not connect the negative lead of jumper cable to the negative terminal the battery in the vehicle.

- **Be especially careful not to:**
  - **touch the positive lead of the jumper cable to the negative lead.**
  - **reverse the polarity of the jumper cables when connecting to the batteries - battery explosion and/or serious damage to the electrical system may occur.**

6. Start the engine. (Refer to "Starting cold engine" on pages 6-1–6-3.)
7. After the engine starts, disconnect the negative lead of the jumper cable from the vehicle and charged battery, and then disconnect the positive lead of the jumper cable from the charged battery and the battery in the vehicle.
8. Install the battery compartment cover.
9. Close the hood.

IDI 080827HWE0001 - Exhibit "B"

Warming up

To get maximum engine life, always warm up the engine before starting off. Never accelerate hard with a cold engine! To see whether or not the engine is warm, check if it responds to the throttle normally with the starter (choke) turned off.

Drive select lever operation and reverse driving

Before shifting, you must stop the vehicle and take your foot off the accelerator pedal. Otherwise, the transmission may be damaged.

Shifting: Neutral to High and High to Low

1. Stop the vehicle. Keep your foot off the accelerator pedal.
2. Apply the brakes, then shift by moving the drive select lever along the shift guide.

NOTE:
Make sure that the drive select lever is completely shifted into position.

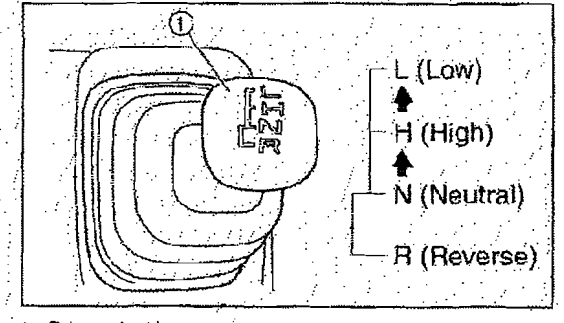

1. Drive select lever

3. Release the brakes and press the accelerator pedal gradually.

IDI 080827HWE0001 - Exhibit "B"

Shifting: Neutral to Reverse

1. Stop the vehicle. Keep your foot off the accelerator pedal.
2. Apply the brake pedal.
3. Shift from neutral to reverse or vice versa by moving the drive select lever along the shift guide.

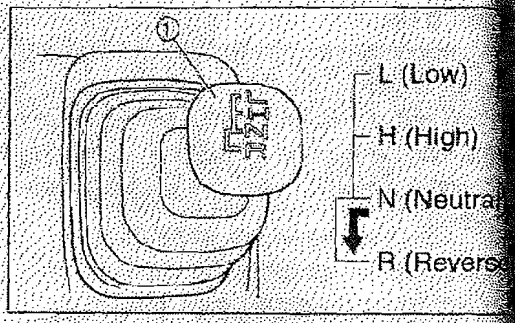

1. Drive select lever

NOTE:

- When in reverse, the reverse indica light should be on. If the light does come on, ask a Yamaha dealer to inspe the reverse indicator light electrical cuit.
- Due to the synchronizing mechanism the engine, the light may not come on til the vehicle starts moving.

4. Check behind for people or obstacle then release the brake pedal.

5. Press the accelerator pedal gradually and continue to watch to the rear while backing.

⚠ WARNING

POTENTIAL HAZARD
Improperly operating in reverse.
WHAT CAN HAPPEN
You could hit an obstacle or person behind you, resulting in serious injury.
HOW TO AVOID THE HAZARD
When you shift into reverse, make sure there are no obstacles or people behind you. When it is safe to proceed, go slowly.

Engine break-in

There is never a more important period in the life of your vehicle than the period between zero and 20 hours.

For this reason, we ask that you carefully read the following material. Because the engine is brand new, you must not put an excessive load on it for the first several hours of running. During the first 20 hours, the various parts in the engine wear and polish themselves to the correct operating clearances.

During this period, prolonged full throttle operation or any condition which might result in excessive engine heating must be avoided. However, momentary (2–3 seconds maximum) full throttle operation under load does not harm the engine.

IDI 080827HWE0001 - Exhibit "B"

Each full throttle acceleration sequence should be followed with a substantial rest period for the engine by cruising at lower r/min so the engine can rid itself of the temporary build up of heat. If any abnormality is noticed during this period, consult a Yamaha dealer.

0–10 hours:
Avoid continuous operation above half throttle. Allow a cooling off period of five to ten minutes after every hour of operation. Vary the speed of the vehicle from time to time. Do not operate it at one set throttle position.

10–20 hours:
Avoid prolonged operation above 3/4 thro
Rev the vehicle freely but do not use full th
tle at any time.

After break-in:
The vehicle can now be operated normall

IDI 080827HWE0001 - Exhibit "B"

3/4 throt
use full thr
normally.

Parking

When parking, stop the engine and shift the drive select lever into the neutral position. Apply the parking brake to help prevent the vehicle from rolling.

Parking on a slope

⚠ WARNING

POTENTIAL HAZARD
Parking on a hill or other incline.
WHAT CAN HAPPEN
The vehicle could roll out of control, increasing the chance of an accident.
HOW TO AVOID THE HAZARD
Avoid parking on hills or other inclines. If you must park on an incline, apply the parking brake, and block the front and rear wheels with rocks or other objects. Do not park the vehicle at all on hills that are so steep you could not walk up them easily.

IDI 080827HWE0001 - Exhibit "B"

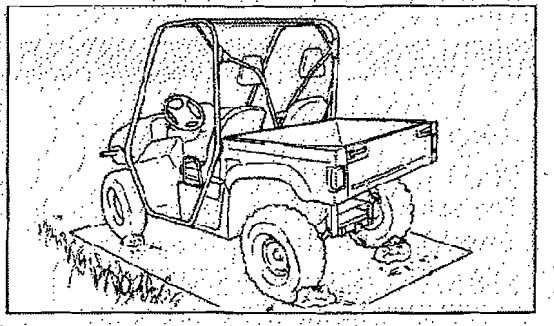

1. Bring the vehicle to a stop by applying the brakes.
2. Stop the engine.
3. With the brakes applied, set the parking brake.

NOTE:
Like many other vehicles, the parking brake acts on the rear wheels. For the parking brake to have the effect of braking all four wheels, shift to 4WD before stopping the engine.

Accessories and loading

Accessories

Accessories can affect the handling and c
trol of your vehicle. Keep the following in m
when considering an accessory or operatin
vehicle which has accessories.

- Choose only accessories designed for y
  vehicle. Your Yamaha dealer has a van
  of genuine Yamaha accessories. Other
  cessories may also be available on
  market. However, it is not possible
  Yamaha to test all non-Yamaha acces
  ries, nor have any control over the quality
  suitability of them. Choose a genu
  Yamaha accessory, or one that is equi
  lent in design and quality.

- Accessories should be rigidly and securely mounted. An accessory which can shift position or come off while you are operating could affect your ability to control the vehicle.
- Do not mount an accessory where it could interfere with your ability to control the vehicle. Examples include (but are not limited to) an object that limits your ability to turn the steering wheel or one that limits your view.
- Use extra caution when driving a vehicle with accessories. The vehicle may handle differently than it does without accessories.

Loading

Cargo or a trailer can change the stability and handling of a vehicle.

You must use common sense and good judgment when carrying cargo or towing a trailer. Keep the following points in mind:

- Never exceed the weight limits shown. An overloaded vehicle can be unstable.

MAXIMUM LOADING LIMIT

- Vehicle loading limit (total weight of cargo, operator, passenger and accessories, and tongue weight): 401 kg (884 lb)
- Cargo bed: 181 kg (400 lb)
- Trailer hitch:
  Pulling load (total weight of trailer and cargo): 550 kgf (1,212 lbf)
  Tongue weight (vertical weight on trailer hitch point): 50 kgf (110 lbf)

IDI 080827HWE0001 - Exhibit "B"

- Choose a trailer hitch drawbar designed for use with a 5 cm (2 in) receiver. (See page 4-28 for more information.)
- Do not exceed the maximum tongue weight. You can measure tongue weight with a bathroom scale. Put the tongue of the loaded trailer on the scale with the tongue at hitch height. Adjust the load in the trailer, if necessary, to reduce the weight on hitch. If you are carrying cargo and towing a trailer, include the tongue weight in the maximum vehicle load limit.
- Load cargo in the cargo bed as close to the center of the vehicle as possible and tie it down using the cargo hooks equipped on the cargo bed.
- Tie down cargo securely in the trailer. Make sure cargo in the trailer cannot move around. A shifting load can cause an accident.
- Make sure the load does not interfere
  controls or your ability to see where you
  going.
- Drive more slowly than you would witho
  load. The more weight you carry, the sl
  er you should go. Although conditions v
  it is good practice not to exceed low ra
  whenever you are carrying heavier loads
  when towing a trailer.
- Allow more braking distance. A heavier
  hicle takes longer to stop.
- Avoid making sharp turns unless at v
  slow speeds.
- Avoid hills and rough terrain. Choose
  rain carefully. Added weight affects the s
  bility and handling of the vehicle.

POTE
Overlo
towing
WHAT
Could
dling v
HOW T
Never
for thi
Cargo
and s
Reduc
pullin
for br

IDI 080827HWE0001 - Exhibit "B"

⚠ WARNING

POTENTIAL HAZARD

Overloading this vehicle or carrying or towing cargo improperly.

WHAT CAN HAPPEN

Could cause changes in vehicle handling which could lead to an accident.

HOW TO AVOID THE HAZARD

Never exceed the stated load capacity for this vehicle.

Cargo should be properly distributed and securely attached.

Reduce speed when carrying cargo or pulling a trailer. Allow greater distance for braking.

IDI 080827HWE0001 - Exhibit "B"

DRIVING YOUR VEHICLE

GETTING TO KNOW YOUR VEHICLE

This off-highway utility vehicle will handle and maneuver differently from an ordinary passenger car or other vehicle.

Before you begin to use your vehicle, be sure you have read this Owner's Manual completely and understand the operation of the controls. Pay particular attention to the safety information on pages 2-1–2-5. Please also read all caution and warning labels on your vehicle.

This vehicle is designed for the operator and one passenger. The driver and passenger must always wear a seat belt. Never carry passengers in the cargo bed.

⚠ WARNING

POTENTIAL HAZARD

Not wearing the seat belt.

Wearing the seat belt improperly.

WHAT CAN HAPPEN

There is increased risk of being killed o seriously injured in an accident.

HOW TO AVOID THE HAZARD

Always wear your seat belt when ridin in the vehicle.

Be sure the seat belt is close-fittin across your hips and chest and i latched securely.

IDI 080827HWE0001 - Exhibit "B"

⚠ WARNING

POTENTIAL HAZARD

Carrying a passenger in the cargo bed.

WHAT CAN HAPPEN

The passenger could fall or be struck by objects in the cargo bed.

HOW TO AVOID THE HAZARD

Never carry a passenger in the cargo bed. The cargo bed is designed to carry cargo only.

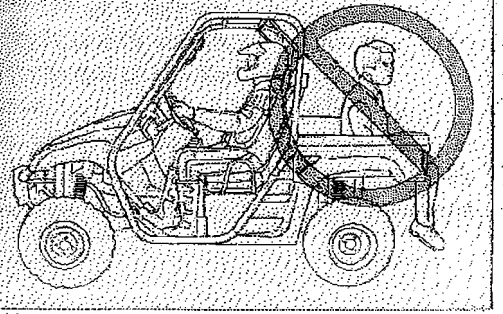

The total weight of operator, passenger, accessories, cargo, trailer tongue weight, and the vehicle itself must not exceed 907 kg (2,000 lb). (See "Loading" on page 6-11.) Carrying a passenger and cargo can affect vehicle handling.

7

IDI 080827HWE0001 - Exhibit "B"

⚠ WARNING

POTENTIAL HAZARD

Overloading this vehicle or carrying or towing cargo improperly.

WHAT CAN HAPPEN

Could cause changes in vehicle handling which could lead to an accident.

HOW TO AVOID THE HAZARD

Never exceed the stated load capacity for this vehicle.

Cargo should be properly distributed and securely attached.

Reduce speed when carrying cargo or pulling a trailer. Allow greater distance for braking.

Always follow the instructions in your Owner's Manual for carrying cargo or pulling a trailer.

The driver and passenger must always wea
seat belt and an approved motorcycle helm
Also wear eye protection and protective clo
ing, including over-the-ankle boots, gloves
long-sleeved shirt or jacket, and long pan
Keep hands and feet inside the vehicle at
times.

IDI 080827HWE0001 - Exhibit "B"

ays wear
le helme
tive cloth
gloves,
ng pants
icle at a

⚠ WARNING

POTENTIAL HAZARD

Operating this vehicle without wearing an approved motorcycle helmet, eye protection, and protective clothing.

WHAT CAN HAPPEN

Operating without an approved motorcycle helmet increases your chances of a severe head injury or death in the event of an accident.

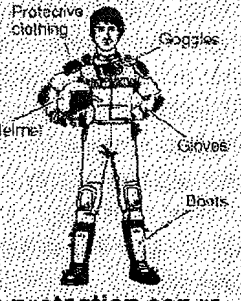

Operating without eye protection can result in an accident and increases your chances of a severe injury in the event of an accident.

HOW TO AVOID THE HAZARD

Always wear an approved motorcycle helmet that fits properly. You should also wear:

- **eye protection (goggles or face shield)**
- **gloves**
- **boots**
- **long-sleeved shirt or jacket**
- **long pants**

IDI 080827HWE0001 - Exhibit "B"

LEARNING TO OPERATE YOUR VEHICLE

You should become familiar with the performance characteristics of the vehicle in a large, flat area that is free of obstacles and other vehicles. Practice control of the accelerator pedal, brakes, steering, and drive select lever. Drive first at slow speed and become comfortable at that speed before gradually increasing your speed. Become familiar with the way the vehicle feels in low and high ranges, first in two-wheel drive (2WD) and then in four-wheel drive (4WD) and four-wheel drive with the differential locked (DIFF. LOCK). Also practice driving in reverse. Take the time to learn basic operation before attempting more difficult maneuvers.

Perform the Pre-Operation Checks on pa 5-1–5-11. Set the parking brake, shift to n tral, and follow the instructions on page 6- start the engine. Once it has warmed up you have turned the choke off, you are re to begin driving your vehicle. With the eng idling, shift the drive select lever into lo high. Then release the parking brake. Pr the accelerator pedal slowly and smoot The centrifugal clutch will engage and you start to accelerate. Avoid higher speeds u you are thoroughly familiar with the operat of your vehicle.

When slowing down or stopping, take yo foot off the accelerator pedal and smooth press the brake pedal. Improper use of t brakes can cause the tires to lose traction, ducing control and increasing the possibility an accident.

Do not shift from low to high or vice versa without coming to a complete stop and waiting for the engine to return to normal idle speed. Damage to the engine or drive train may occur.

TURNING YOUR VEHICLE

The vehicle is easier to steer in two-wheel drive (2WD) than four-wheel drive (4WD). Steering takes the most effort in 4WD with the differential locked (DIFF. LOCK).

It is possible for the vehicle to roll over or go out of control if you attempt sharp, high-speed turns. You should also be careful making sharp turns on rough terrain. Do not attempt to turn around or make abrupt maneuvers on slopes.

Position your hands on the steering wheel so that your thumbs and fingers do not wrap around the wheel. This is particularly important when driving in rough terrain. The front wheels will move right and left as they respond to the terrain, and this movement will be felt in the steering wheel. A sudden jolt could wrench the steering wheel around, and your thumbs or fingers could be injured if they are in the way of the steering wheel spokes.

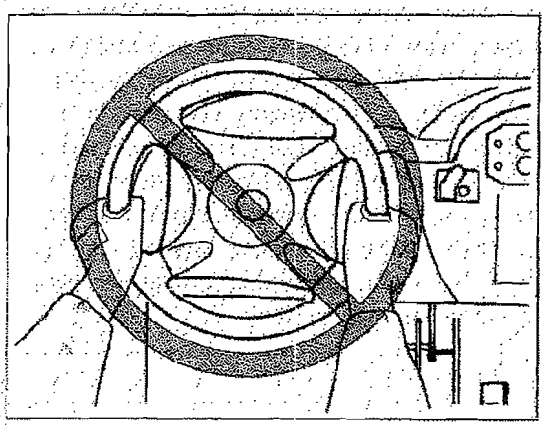

BRAKING

Braking ability is affected by the type of terrain. In most cases, gradually application of the brakes is more effective than abrupt braking, particularly on loose surfaces like gravel. Always allow for greater braking distance on rough, loose, or slippery surfaces.

GOING UPHILL

Do not attempt to climb hills until you have mastered basic maneuvers on flat ground. Use proper driving techniques to avoid overturns on hills and slopes. Drive straight up hills, and avoid crossing the side of a hill, which increases your chance of rollover. Practice first on gentle slopes before attempting steeper hills. Always check the terrain carefully before attempting any hill. Use common sense and remember that some hills are too steep for you to climb.

Maximum slope angle: 15°

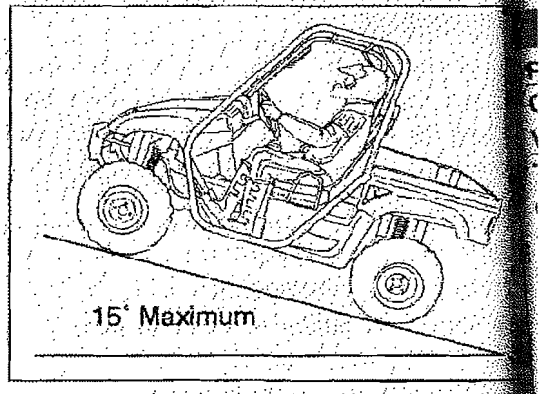

Choose carefully which hills you attempt to climb. Avoid hills with slippery surfaces or ones where you will not be able to see clearly enough ahead of you.

IDI 080827HWE0001 - Exhibit "B"

⚠ WARNING

POTENTIAL HAZARD

Operating on excessively steep hills.

WHAT CAN HAPPEN

The vehicle can overturn more easily on extremely steep hills than on level surfaces or small hills.

HOW TO AVOID THE HAZARD

Never operate your vehicle on hills too steep for it or your abilities. Never operate vehicles on hills steeper than 15°.

Do not drive across the face of a hill. Go straight up the hill.

Practice on smaller hills before attempting large hills.

Before climbing the hill, first be sure you are operating in low range 4WD or, if necessary, with 4WD Diff. Lock. To climb a hill, you need traction, momentum, and steady throttle. Travel fast enough to keep your momentum going, but not so fast that you cannot react to changes in the terrain as you climb. Slow down when you reach the crest of the hill if you cannot clearly see what is on the other side – there could be another person, an obstacle, or a sharp drop off.

IDI 080827HWE0001 - Exhibit "B"

If you start to lose traction or momentum when climbing, and you decide you will be unable to continue, use the brakes to come to a stop. Do not attempt to turn the vehicle around. With your foot on the brake, look behind you and plan your descent. Shift the drive select lever in reverse so you can use the engine brake if necessary to slow your descent. Release the brake and begin to coast down the hill. Use engine braking as much as possible, gently applying the brakes when necessary.

GOING DOWNHILL

Check the terrain carefully before going do
a hill. When possible, choose a path that
you drive your vehicle straight downhill. Av
sharp angles that could allow the vehicle
pitch or roll over. Carefully choose your p
and drive no faster than you will be able to
act to obstacles that may appear.

going dow
ath that le
vnhill. Avo
vehicle
your pat
able to re

⚠ WARNING

POTENTIAL HAZARD

Going down a hill improperly.

WHAT CAN HAPPEN

Could cause loss of control or cause the vehicle to overturn.

HOW TO AVOID THE HAZARD

Always check the terrain carefully before you start down any hill. Never go down a hill at high speed. Avoid going down a hill at an angle that would cause the vehicle to lean sharply to one side. Go straight down the hill where possible.

Before starting down hill, make sure the vehicle is in low-range 4WD. On most slopes, this will let you use engine braking to help you go downhill slowly. Go as slowly as possible. If you are starting to go too fast, apply the brakes gently. Avoid sudden application of the brakes, which could cause the vehicle to start sliding.

If you are sliding or skidding, try to steer in the direction the vehicle is sliding to help you regain control.

If you must turn on the hill to avoid an obstacle, do so slowly and carefully. If the vehicle starts to tip, gradually steer in the downhill direction if there are no obstacles in your path. As you regain proper balance, gradually steer again in the direction you want to go.

IDI 080827HWE0001 - Exhibit "B"

CROSSING THROUGH SHALLOW WATER

If you must cross shallow, slow moving water up to the depth of the vehicle's floorboards, choose your path carefully to avoid sharp drop-offs, large rocks, or slippery surfaces that could cause the vehicle to overturn. Never operate through water deeper than 33 cm (13 in) or fast flowing water.

Wet brakes may have reduced effectiveness. After leaving the water, test your brakes. If necessary, apply the brakes several times to let friction dry out the linings.

⚠ WARNING

POTENTIAL HAZARD

Operating this vehicle through deep o fast-flowing water.

WHAT CAN HAPPEN

Loss of control, which could result in a accident including overturn, whic could increase the risk of drowning.

HOW TO AVOID THE HAZARD

Never operate this vehicle in fast flow ing water or in water deeper than 33 cm (13 in).

Remember that wet brakes may have re duced stopping ability. Test your brakes after leaving water. If necessary, apply them several times to let friction dry out the linings.

IDI 080827HWE0001 - Exhibit "B"

ING

through deep or

uld result in an
erturn, which
f drowning.
ZARD
le in fast flow-
er than 33 cm

may have re-
t your brakes
essary, apply
ction dry out

After riding your vehicle in water, be sure to drain the trapped water by removing the check hose at the bottom of the air filter case, the V-belt cooling duct check hose, the drive select lever box check hose and the V-belt case drain plug. Wash the vehicle in fresh water if it has been operated in salt water or muddy conditions.

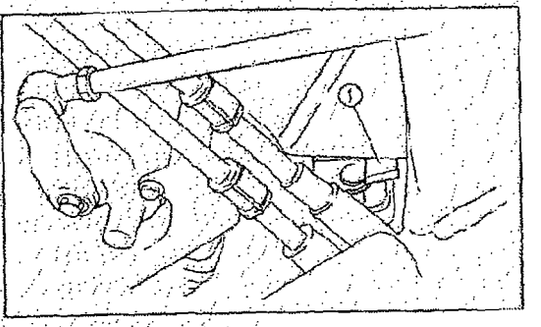

1. Air filter case check hose

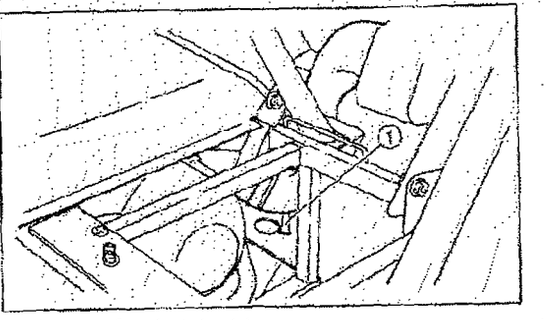

1. V-belt cooling duct check hose

IDI 080827HWE0001 - Exhibit "B"

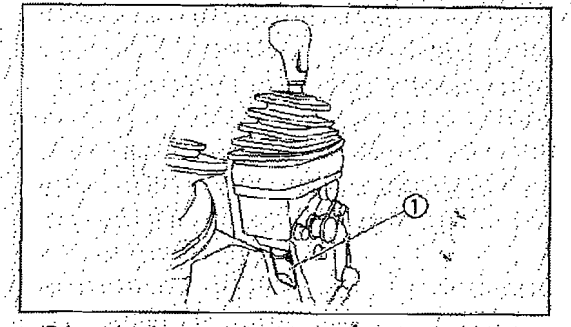

1. Drive select lever box check hose

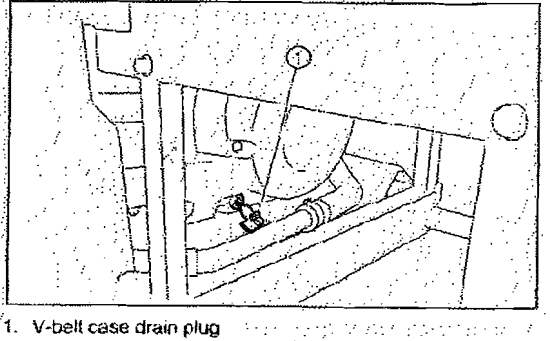

1. V-belt case drain plug

RIDING OVER ROUGH TERRAIN

Operating over rough terrain should be don with caution. Look for obstacles that cou cause damage to the vehicle or could lead a rollover or accident. Avoid jumping the veh cle as injury, loss of control, and damage the vehicle could occur.

⚠ WARNING

POTENTIAL HAZARD

Failure to use extra care when operating this vehicle on unfamiliar terrain.

WHAT CAN HAPPEN

You can come upon hidden rocks, bumps, or holes, without enough time to react. Could result in the vehicle overturning or going out of control.

HOW TO AVOID THE HAZARD

Go slowly and be extra careful when operating on unfamiliar terrain. Always be alert to changing terrain conditions when operating the vehicle.

IDI 080827HWE0001 - Exhibit "B"

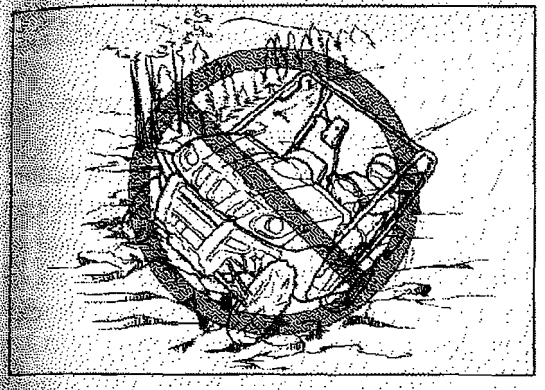

RIDING IN BRUSH OR WOODED AREAS

When operating in areas with brush or trees, watch carefully on both sides and above the vehicle for obstacles such as branches that the vehicle might hit, causing an accident, or for brush that might enter the vehicle as you pass and strike the driver or passenger. Never hold onto the enclosure so your hand is outside the vehicle. Hold only onto the handgrip inside the enclosure.

IDI 080827HWE0001 - Exhibit "B"

ENCOUNTERING OBSTACLES ON THE TRAIL

If you cannot go around an obstacle such as a fallen tree trunk or a ditch, stop the vehicle where it is safe to do so. Set the parking brake and get out to inspect the area thoroughly. Look from both your approach side and the exit side. If you believe you can continue safely, decide the path that will allow you to get over the obstacle at as close to a right angle as possible to minimize vehicle tipping. Go only fast enough to maintain your momentum but still give yourself plenty of time to react to changes in conditions. If there is any question about your ability to maneuver safely over the obstacle, you should turn around, if the ground is flat and you have the room, or back up until you find a less difficult path.

⚠ WARNING

POTENTIAL HAZARD

Improperly operating over obstacles

WHAT CAN HAPPEN

Could cause loss of control or a collision. Could cause the vehicle to overturn.

HOW TO AVOID THE HAZARD

Before operating in a new area, check for obstacles.

Use extreme caution when operating over large obstacles, such as large rocks or fallen trees.

IDI 080827HWE0001 - Exhibit "B"

PERIODIC MAINTENANCE AND ADJUSTMENT

Periodic inspection, adjustment and lubrication will keep your vehicle in the safest and most efficient condition possible. Safety is an obligation of the vehicle owner. The most important points of vehicle inspection, adjustment and lubrication are explained on the following pages.

⚠ WARNING

POTENTIAL HAZARD

Servicing an engine while it is running.

WHAT CAN HAPPEN

Moving parts can catch clothing or parts of the body, causing injury.

Electrical components can cause shocks or can start fires.

HOW TO AVOID THE HAZARD

Turn off the engine when performing maintenance unless otherwise specified.

Have a Yamaha dealer perform service if you are not familiar with vehicle service.

Owner's manual and tool kit

You are recommended to put this owner's manual in the vinyl bag and always carry it on the bottom of the driver seat as shown. Put the owner's tool kit and tire pressure gauge in the space beside the battery.

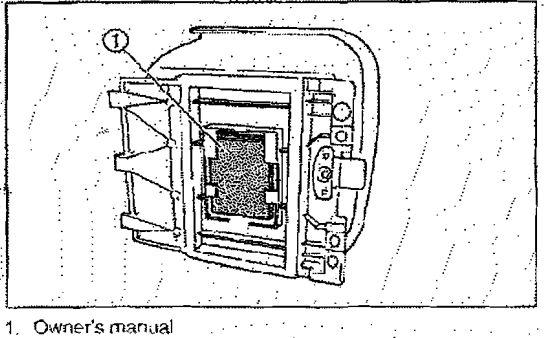

1. Owner's manual

IDI 080827HWE0001 - Exhibit "B"

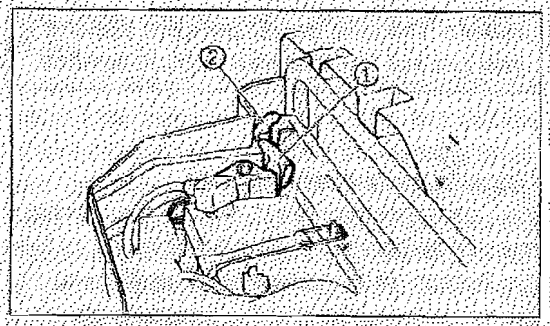

1. Owner's tool kit 2. Tire pressure gauge

The service information included in this manual is intended to provide you, the owner, with the necessary information for completing your own preventive maintenance and minor repairs. The tools provided in the Owner's tool kit are sufficient for this purpose, except that a torque wrench is also necessary to properly tighten nuts and bolts.

NOTE:

If you do not have a torque wrench available during a service operation requiring one, take your vehicle to a Yamaha dealer to check the torque settings and adjust them as necessary.

IDI 080827HWE0001 - Exhibit "B"

⚠ WARNING

POTENTIAL HAZARD

Operating this vehicle with improper modifications.

WHAT CAN HAPPEN

Improper installation of accessories or modification of this vehicle may cause changes in handling which in some situations could lead to an accident.

HOW TO AVOID THE HAZARD

Never modify this vehicle through improper installation or use of accessories. All parts and accessories added to this vehicle should be genuine Yamaha or equivalent components designed for use on this vehicle and should be installed and used according to instructions. If you have questions, consult an authorized Yamaha vehicle dealer.

IDI 080827HWE0001 - Exhibit "B"

PERIODIC MAINTENANCE/LUBRICATION

NOTE:

- For vehicles not equipped with an odometer or hour meter, follow the month maintenance intervals.
- For vehicles equipped with an odometer or an hour meter, follow the km (mi) or hours maintenance intervals. However, keep i mind that if the vehicle isn't used for a long period of time, the month maintenance intervals should be followed.
- Items marked with an asterisk should be performed by a Yamaha dealer as they require special tools, data and technical skills

ITEM	ROUTINE	Whichever comes first ⇨		INITIAL			EVERY	
			month	1	3	6	6	12
			km (mi)	320 (200)	1,200 (750)	2,400 (1,500)	2,400 (1,500)	4,800 (3,000)
			hours	20	75	150	150	300
Valves*	• Check valve clearance. • Adjust if necessary.			○		○	○	○
Cooling system	• Check coolant leakage. • Repair if necessary. • Replace coolant every 24 months.			○	○	○	○	○
Spark plug	• Check condition. • Adjust gap and clean. • Replace if necessary.			○	○	○	○	○
Air filter elements (engine and air intake duct)	• Clean. • Replace if necessary.			Every 20–40 hours (More often in wet or dusty areas.)				
Carburetor*	• Check idle speed/starter operation. • Adjust if necessary.				○	○	○	○
Crankcase breather system*	• Check breather hose for cracks or damage. • Replace if necessary.					○	○	○
Exhaust system*	• Check for leakage. • Tighten if necessary. • Replace gasket(s) if necessary.					○	○	○
Spark arrester	• Clean.					○	○	○
Fuel line*	• Check fuel hose for cracks or damage. • Replace if necessary.					○	○	○
Engine oil	• Replace (warm engine before draining).			○		○	○	○
Engine oil filter cartridge	• Replace.			○		○		○
Final gear oil	• Check oil level/oil leakage			○				○
Differential gear oil	• Replace.							

IDI 080827HWE0001 - Exhibit "B"

ITEM	ROUTINE	Whichever comes first ⇨		INITIAL			EVERY	
			month	1	3	6	6	12
			km (mi)	320 (200)	1,200 (750)	2,400 (1,500)	2,400 (1,500)	4,800 (3,000)
			hours	20	75	150	150	300
Front brake*	• Check operation/brake pad wear/fluid leakage/see NOTE page 8-5. • Correct if necessary. Replace pads if worn to the limit.			○	○	○	○	○
Rear brake*	• Check operation/brake pad wear/fluid leakage/see NOTE page 8-5. • Correct if necessary. Replace pads if worn to the limit.			○	○	○	○	○
Accelerator pedal*	• Check operation and free play.			○	○	○	○	○
V-belt*	• Check operation. • Check for wear, cracks, or damage.			○			○	○
Wheels*	• Check balance/damage/runout. • Repair if necessary.			○		○	○	○
Wheel bearings*	• Check bearing assemblies for looseness/damage. • Replace if damaged.			○		○	○	○
Front and rear suspension*	• Check operation and for leakage. • Correct if necessary.					○		○
Steering system*	• Check operation and for looseness/Replace if damaged. • Check toe-in/Adjust if necessary.			○	○	○	○	○
Rear upper and lower knuckle pivots*	• Lubricate with lithium-soap-based grease.					○	○	○
Drive shaft universal joint*	• Lubricate with lithium-soap-based grease.					○	○	○
Engine mount*	• Check for cracks or damage. • Check bolt tightness.					○	○	○
Front and rear axle boots*	• Check operation. • Replace if damaged.			○				○
Stabilizer bushings*	• Check for cracks or damage.					○	○	○
Fittings and fasteners*	• Check all chassis fittings and fasteners. • Correct if necessary.			○	○	○	○	○

NOTE:

- Recommended brake fluid: DOT 4
- Brake fluid replacement:
  - When disassembling the master cylinder or caliper, replace the brake fluid. Normally check the brake fluid level and add fluid as required.
  - On the inner parts of the master cylinder and caliper, replace the oil seals every two years.
  - Replace the brake hoses every four years, or if cracked or damaged.

IDI 080827HWE0001 - Exhibit "B"

Hood

To open

Unhook the hood latches, and then slowly tilt the hood up until it stops.

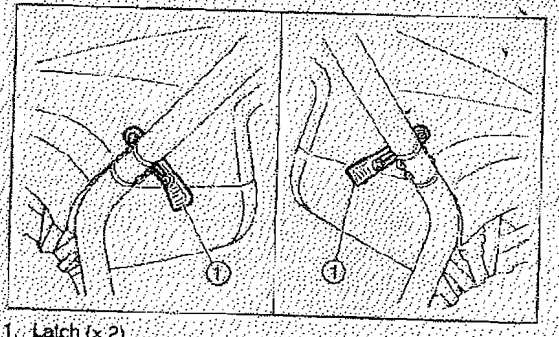

1. Latch (x 2)

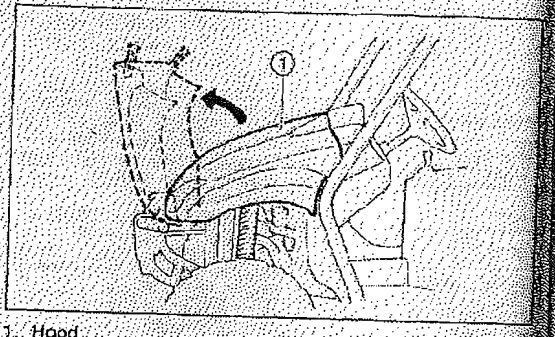

1. Hood

To clos
Lower th
and then
Secure p
hood int
ment par
hood aro

1. Projection
3. Slot (x 2)

To close

Lower the hood slowly to its original position, and then hook the hood latches.

Secure projections ① on the underside of the hood into slots ② on the back of the instrument panel. Secure slots ③ on the side of the hood around projections ④ on the frame.

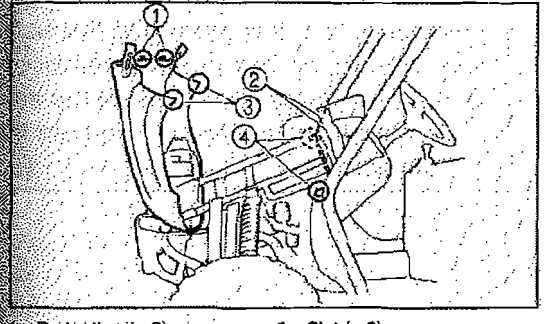

1. Projection (× 2)
2. Slot (× 2)
3. Slot (× 2)
4. Projection (× 2)

WARNING

- **Make sure that all cables and wires are in place when closing the hood.**
- **Do not drive the vehicle with the hood open, unlatched, or removed.**

IDI 080827HWE0001 - Exhibit "B"

Console

To remove

1. Remove the seats. (See page 4-20 for seat removal and installation procedures.)
2. Remove the parking brake lever boot.
3. Pull the console upward (the drive select lever boot will come loose).

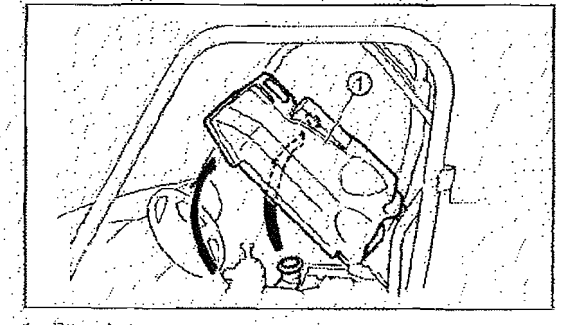

1. Console

To install

1. Place the console in its original position.
2. Install the parking brake lever boot.
3. Install the seats.

CAUTION

- **When installing the console, be sure not to pinch the cables or wires.**
- **Make sure that the groove at the bottom of the parking brake lever boot and the drive select lever boot fits securely around the edge of the hole in the console.**

Engine oil an

The engine oil
each operatio
changed and
the intervals s
nance and lub

To check the

1. Place the
2. Remove
console
dures.)
3. Start the
minutes,
4. Wait a fe
5. Remove t
off the dip
6. Insert the
(without s
it again to

IDI 080827HWE0001 - Exhibit "B"

Engine oil and oil filter cartridge

The engine oil level should be checked before each operation. In addition, the oil must be changed and the oil filter cartridge replaced at the intervals specified in the periodic maintenance and lubrication chart.

To check the engine oil level

1. Place the vehicle on a level surface.
2. Remove the console. (See page 8-8 for console removal and installation procedures.)
3. Start the engine, warm it up for several minutes, and then turn it off.
4. Wait a few minutes until the oil settles.
5. Remove the engine oil filler cap and wipe off the dipstick with a clean rag.
6. Insert the dipstick in the oil filler hole (without screwing it in), and then remove it again to check the oil level.

NOTE:

The engine oil should be between the minimum and maximum level marks.

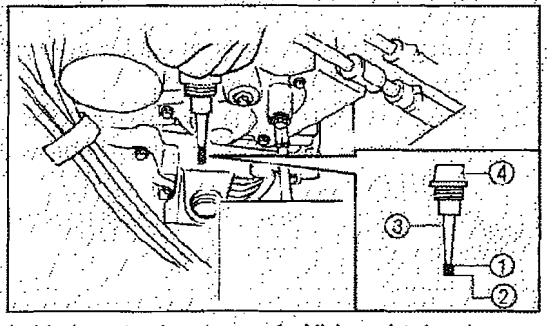

1. Maximum level mark
2. Minimum level mark
3. Dipstick
4. Engine oil filler cap

7. If the engine oil is at or below the minimum level mark, add sufficient oil of the recommended type to raise it to the correct level.
8. Insert the dipstick into the oil filler hole, and then tighten the oil filler cap.
9. Install the console.

IDI 080827HWE0001 - Exhibit "B"

To change the engine oil (with or without oil filter cartridge replacement)

1. Remove the console. (See page 8-8 for console removal and installation procedures.)
2. Start the engine, warm it up for several minutes, and then turn it off.
3. Place an oil pan under the engine to collect the used oil, and then remove the engine oil filler cap.
4. Remove the engine oil drain bolt to drain the oil from the crankcase.

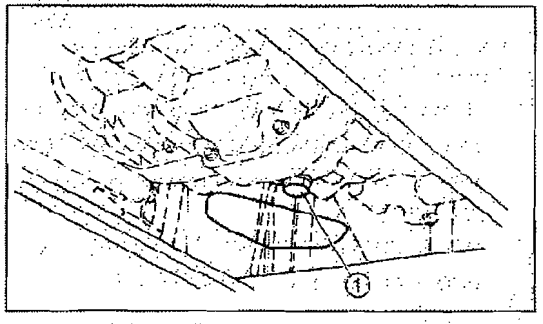

1. Engine oil drain bolt

NOTE:
Skip steps 5–7 if the oil filter cartridge is not being replaced.

5. Remove the oil filter cartridge with an oil filter wrench.

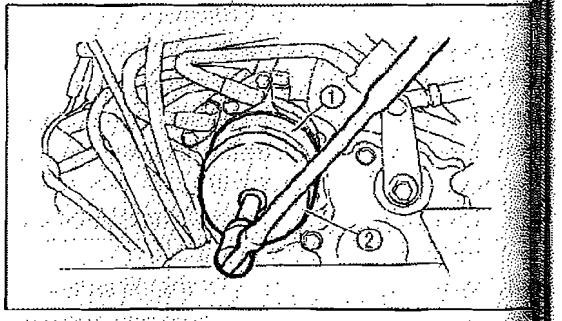

1. Oil filter cartridge 2. Oil filter wrench

NOTE:
An oil filter wrench is available at a nearby Yamaha dealer.

6. Ap
O-r

NOTE:
Make su

1. O-ring

7. Inst
oil f
spe

Tighte
Oil f
1

6. Apply a light coat of engine oil to the O-ring of the new oil filter cartridge.

NOTE:
Make sure the O-ring is seated properly.

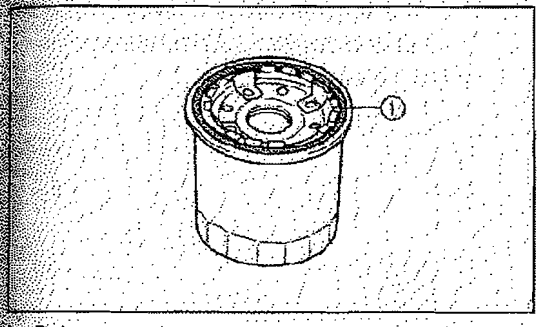

1. O-ring

7. Install the new oil filter cartridge with an oil filter wrench, and then tighten it to the specified torque with a torque wrench.

Tightening torque:
Oil filter cartridge:
17 Nm (1.7 m·kgf, 12 ft·lbf)

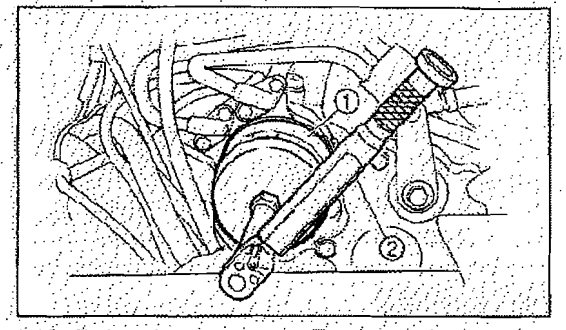

1. Oil filter cartridge 2. Torque wrench

8. Install the engine oil drain bolt, and then tighten it to the specified torque.

Tightening torque:
Engine oil drain bolt:
30 Nm (3.0 m·kgf, 22 ft·lbf)

9. Add the specified amount of recommended engine oil, and then install the engine oil filler cap and tighten it.

IDI 080827HWE0001 - Exhibit "B"

Recommended engine oil:
See page 10-2.
Oil quantity:
Without oil filter cartridge replacement:
1.90 L (1.67 Imp qt, 2.01 US qt)
With oil filter cartridge replacement:
2.00 L (1.76 Imp qt, 2.11 US qt)

CAUTION:

- **In order to prevent clutch slippage (since the engine oil also lubricates the clutch), do not mix any chemical additives. Do not use oils with a diesel specification of "CD" or oils of a higher quality than specified. In addition, do not use oils labeled "ENERGY CONSERVING II" or higher.**
- **Make sure that no foreign material enters the crankcase.**

10. Start the engine and warm it up for several minutes. While warming up, check for oil leakage. If oil leakage is found, turn the engine off immediately and check for the cause.
11. Turn the engine off, and then check the oil level and correct it if necessary.
12. Install the console.

Final gear oil

Checking the final gear oil level

1. Place the vehicle on a level surface.
2. Remove the oil filler bolt, and then check the oil level in the final gear case.

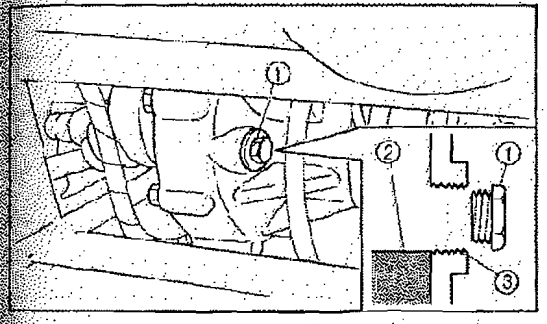

1. Final gear oil filler bolt
2. Final gear oil
3. Correct oil level

NOTE:

The oil level should be at the brim of the filler hole.

3. If the oil is below the brim of the filler hole, add sufficient oil of the recommended type to raise it to the correct level.

CAUTION:

Be sure no foreign material enters the final gear case.

4. Install the oil filler bolt, and then tighten it to the specified torque.

Tightening torque:
Final gear oil filler bolt:
23 Nm (2.3 m·kgf, 17 ft·lbf)

IDI 080827HWE0001 - Exhibit "B"

Changing the final gear oil

1. Place the vehicle on a level surface.
2. Place a container under the final gear case to collect the used oil.
3. Remove the oil filler bolt and the drain bolt to drain the oil.

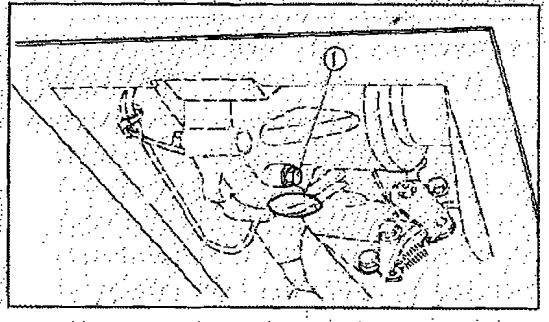

1. Final gear oil drain bolt

4. Install the drain bolt, and then tighten it to the specified torque.

Tightening torque:
Final gear oil drain bolt:
20 Nm (2.0 m·kgf, 14 ft·lbf)

5. Add the recommended final gear oil up to the brim of the filler hole.

Recommended oil:
SAE 80 API GL-4 Hypoid gear oil
Oil quantity:
0.25 L (0.22 Imp qt, 0.26 US qt)

Be sure no foreign material enters the final gear case.

6. Install the oil filler bolt, and then tighten it to the specified torque.

Tightening torque:
Final gear oil filler bolt:
23 Nm (2.3 m·kgf, 17 ft·lbf)

7. Check for oil leakage. If oil leakage is found, check for the cause.

Differen
Checkir
1. Pla
2. Rer
and
the
low
ed t

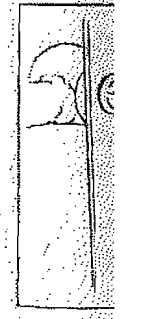

1. Different
2. Correct

IDI 080827HWE0001 - Exhibit "B"

Differential gear oil

Checking the differential gear oil level

1. Place the vehicle on a level surface.
2. Remove the differential gear oil filler bolt and check the oil level. It should be up to the brim of the filler hole. If the level is low, add sufficient oil of the recommended type to raise it to the specified level.

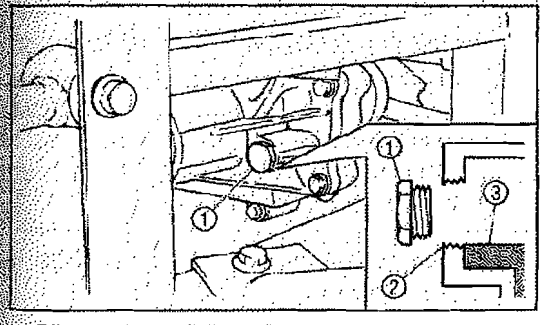

1. Differential gear oil filler bolt
2. Correct oil level
3. Differential gear oil

CAUTION

Be sure no foreign material enters the differential gear case.

3. Install the differential gear oil filler bolt, and then tighten it to the specified torque.

Tightening torque:
Differential gear oil filler bolt:
23 Nm (2.3 m·kgf, 17 ft·lbf)

Changing the differential gear oil

1. Place the vehicle on a level surface.
2. Place a container under the differential gear case to collect the used oil.
3. Remove the differential gear oil filler bolt and differential gear oil drain bolt to drain the oil.

IDI 080827HWE0001 - Exhibit "B"

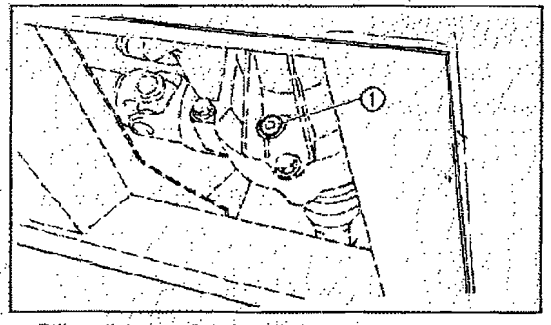

1. Differential gear oil drain bolt

4. Install the differential gear oil drain bolt, and tighten it to the specified torque.

Tightening torque:
Differential gear oil drain bolt:
9.8 Nm (0.98 m·kgf, 7.1 ft·lbf)

5. Fill the differential gear case with the recommended oil.

Recommended oil:
SAE 80 API GL-4 Hypoid gear oil
Oil quantity:
0.32 L (0.28 Imp qt, 0.34 US qt)

CAUTION

Be sure no foreign material enters the differential gear case.

6. Install the differential gear oil filler bolt, and then tighten it to the specified torque.

Tightening torque:
Differential gear oil filler bolt:
23 Nm (2.3 m·kgf, 17 ft·lbf)

7. Check for oil leakage. If oil leakage is found, check for the cause.

Coolant

The coolant level should be checked before each ride.

Checking the coolant level

1. Place the vehicle on a level surface.
2. Open the hood. (See pages 8-6–8-7 for hood opening and closing procedures.)
3. Check the coolant level in the coolant reservoir when the engine is cold as the coolant level varies with engine temperature.

NOTE:

The coolant should be between the minimum and maximum level marks.

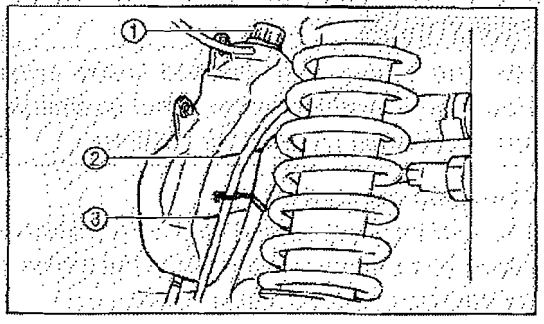

1. Coolant reservoir cap
2. Maximum level mark
3. Minimum level mark

4. If the coolant is at or below the minimum level mark, remove the reservoir cap, add coolant to the maximum level mark, install the reservoir cap, and then close the hood.

Coolant reservoir capacity
(up to the maximum level mark):
0.35 L (0.31 Imp qt, 0.37 US qt)

IDI 080827HWE0001 - Exhibit "B"

CAUTION:

Mix anti freeze with distilled water only. However, if distilled water is not available, soft water may be used for refilling.

Changing the coolant

The coolant must be changed by a Yamaha dealer at the intervals specified in the periodic maintenance and lubrication chart.

NOTE:

- Adding water instead of coolant lowers the antifreeze content of the coolant. If water is used instead of coolant, have a Yamaha dealer check the antifreeze content of the coolant as soon as possible.
- The radiator fan operation is completely automatic. It is switched on or off according to the coolant temperature in the radiator.

If your vehicle overheats, see page 8-54 for details.

Axle boots

Check the protective boots for holes or tears. If any damage is found, have them replaced by a Yamaha dealer.

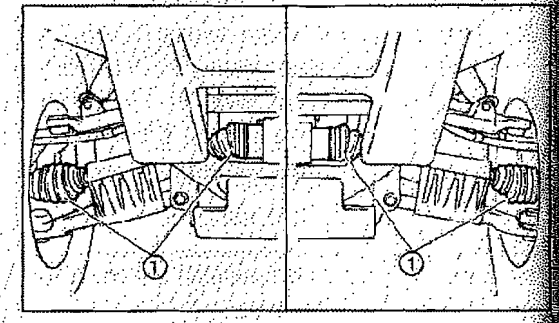

1. Front axle boot (× 2 each side)

IDI 080827HWE0001 - Exhibit "B"

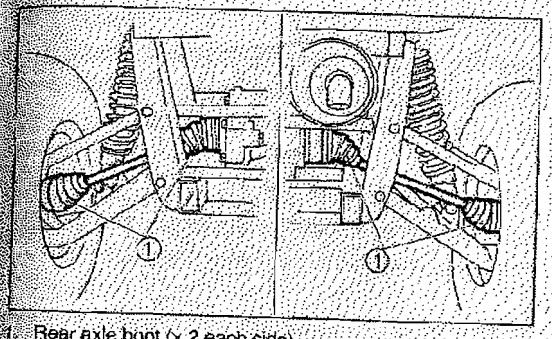

1. Rear axle boot (× 2 each side)

IDI 080827HWE0001 - Exhibit "B"

Spark plug inspection

Removal

1. Lift the cargo bed up. (See pages 4-23–4-26 for cargo bed lifting and lowering procedures.)
2. Remove the spark plug cap.

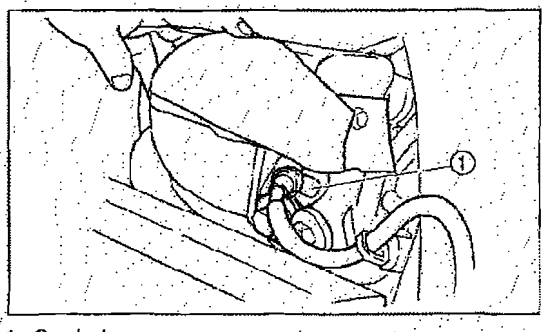

1. Spark plug cap

3. Use the spark plug wrench in the tool kit to remove the spark plug as shown.

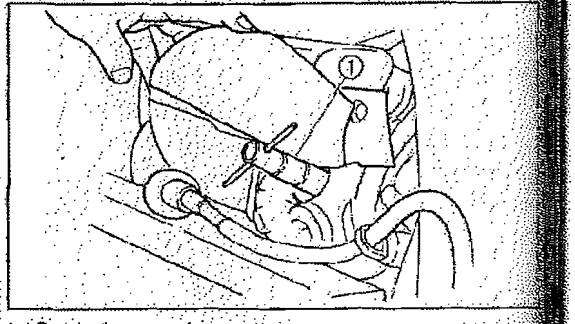

1. Spark plug wrench

Inspection

The spark plug is an important engine component and is easy to inspect. The condition of the spark plug can indicate the condition of the engine.

The ideal color of the porcelain insulator around the center electrode is a medium-to-light tan for a vehicle that is being ridden normally.

Do not attempt to diagnose such problems yourself.

Instead, take the vehicle to a Yamaha dealer.

You should periodically remove and inspect the spark plug because heat and deposits will cause the spark plug to slowly break down and erode. If electrode erosion becomes excessive, or if carbon and other deposits are excessive, you should replace the spark plug with the specified plug.

Specified spark plug:
DPR8EA-9 (NGK)

Installation

1. Measure the electrode gap with a wire thickness gauge and, if necessary, adjust the gap to specification.

Spark plug gap:
0.8–0.9 mm (0.031–0.035 in)

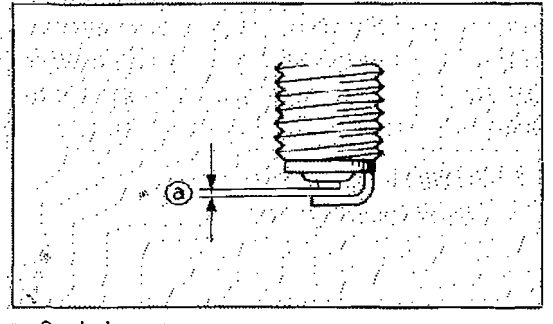

a. Spark plug gap

2. Clean the surface of the spark plug gasket and its mating surface, and then wipe off any grime from the spark plug threads.

IDI 080827HWE0001 - Exhibit "B"

3. Install the spark plug and tighten it to the specified torque.

Tightening torque:
Spark plug:
17.5 Nm (1.75 m·kgf, 12.7 ft·lbf)

NOTE:
If a torque wrench is not available when you are installing the spark plug, a good estimate of the correct torque is 1/4 to 1/2 turn past finger tight. Have the spark plug tightened to the specified torque as soon as possible.

4. Install the spark plug cap.
5. Lower the cargo bed.

Cleaning the air filter elements
Cleaning the intake duct air filter element

1. Remove the air intake duct grill by removing the quick fastener screws.

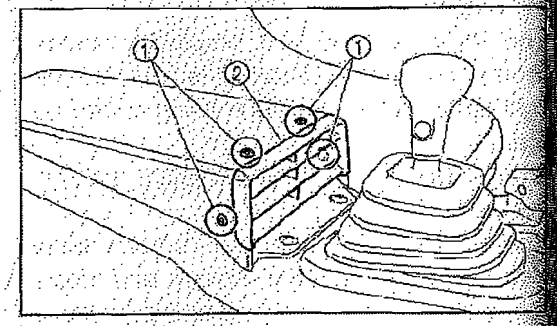

1. Quick fastener screw (× 4)
2. Air intake duct grill

2. Remove the air filter element from the air intake duct grill by pulling it out as shown.

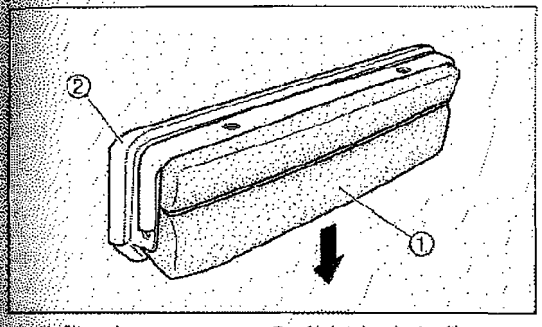

1. Air filter element 2. Air intake duct grill

3. Remove any large particles from the air filter element by hand.
4. Tap the air filter element to remove most of the dust and dirt, and then blow the remaining dirt out with compressed air.

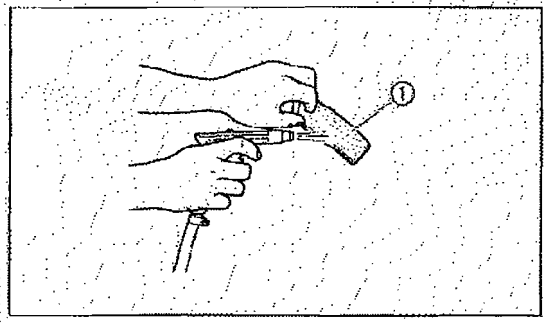

1. Air filter element

5. Install the air filter element into the air intake duct grill.
6. Install the air intake duct grill by installing the quick fastener screws.

IDI 080827HWE0001 - Exhibit "B"

Cleaning the engine air filter element

NOTE:
There is a check hose at the bottom of the air filter case. If dust or water collects in this hose, empty the hose and clean the air filter element and air filter case.

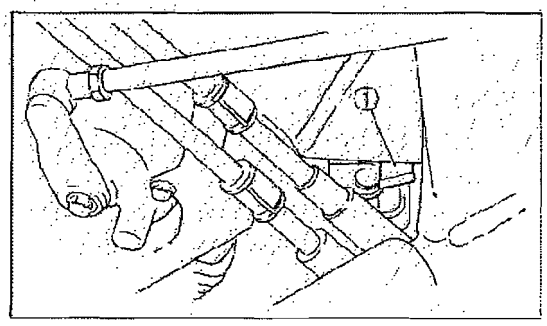

1. Air filter case check hose

1. Remove the seats. (See page 4-20 for seat removal and installation procedures.)
2. Remove the console. (See page 8-8 for console removal and installation procedures.)
3. Remove the air filter case cover by unhooking the holders.

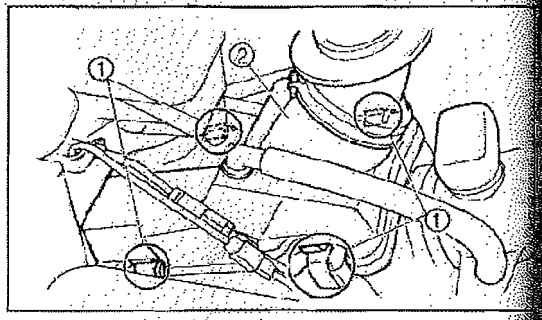

1. Holder (× 4) 2. Air filter case cover

4. Remove the air filter element.
5. Remove the air filter element from its frame.

1. Air filter

1. Air filter
3. Element

IDI 080827HWE0001 - Exhibit "B"

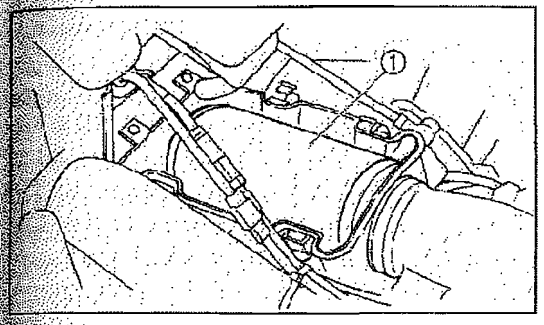

1. Air filter element

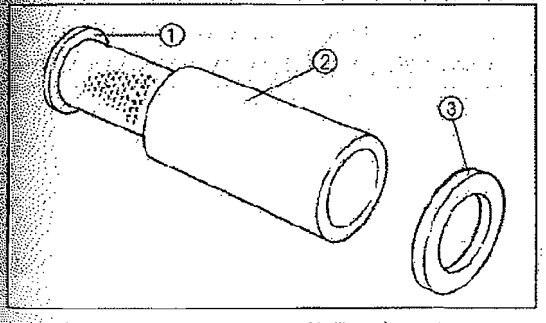

1. Air filter frame
2. Air filter element
3. Element retaining plate

6. Wash the air filter element gently but thoroughly in solvent.

⚠ WARNING

POTENTIAL HAZARD

Using low flash point solvents or gasoline to clean the air filter element.

WHAT CAN HAPPEN

Low flash point solvents or gasoline can catch fire or explode.

HOW TO AVOID THE HAZARD

Use parts cleaning solvent to clean the air filter element.

7. Squeeze the excess solvent out of the air filter element and let it dry.

CAUTION

Do not twist the air filter element when squeezing it.

8. Inspect the air filter element and replace it if damaged.

IDI 080827HWE0001 - Exhibit "B"

9. Thoroughly apply Yamaha foam air filter oil or other quality liquid foam air filter oil (not spray type) to the air filter element.

NOTE:
The air filter element should be wet but not dripping.

10. Pull the air filter element over its frame.
11. Install the air filter element.
12. Install the air filter case cover and be sure the crankcase breather hose is connected.

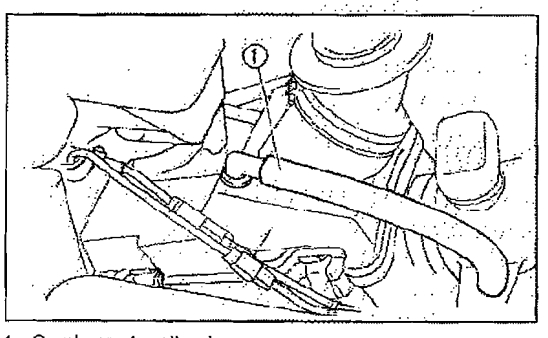

1. Crankcase breather hose

13. Install the console.
14. Install the seats.

NOTE:
The air filter element should be cleaned every 20–40 hours. It should be cleaned and lubricated more often if the vehicle is operated in extremely dusty areas. Each time air filter element maintenance is performed, check the air inlet to the air filter case for obstructions. Check the air filter element rubber joint to the carburetor and manifold fittings for an airtight seal. Tighten all fittings securely to avoid the possibility of unfiltered air entering the engine.

IDI 080827HWE0001 - Exhibit "B"

CAUTION:

Never operate the engine with the air filter element removed. This will allow unfiltered air to enter, causing rapid engine wear and possible engine damage. Additionally, operation without the air filter element will affect carburetor jetting with subsequent poor performance and possible engine overheating.

V-belt cooling duct check hose

The V-belt cooling duct check hose is located under the driver seat. (See page 4-20 for seat removal and installation procedures.)

If dust or water collects in the V-belt cooling duct check hose, remove the hose and clean it.

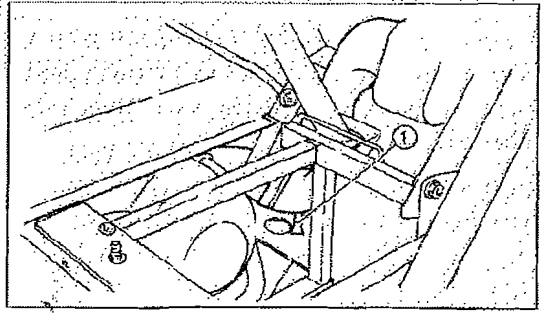

1. V-belt cooling duct check hose

IDI 080827HWE0001 - Exhibit "B"

V-belt case drain plug

The V-belt case drain plug is located under the driver seat. (See page 4-20 for seat removal and installation procedures.)

After riding in water deep enough to allow water to enter the V-belt case, remove the drain plug to drain any water from the case.

NOTE:

If water drains from the V-belt case after removing the drain plug, have a Yamaha dealer inspect the vehicle as the water may affect other engine parts.

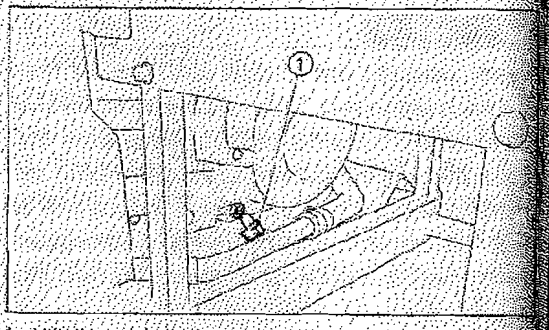

1. V-belt case drain plug

Cleaning the spark arrester

Be sure the exhaust pipe and muffler are cool before cleaning the spark arrester.

1. Remove the bolts.

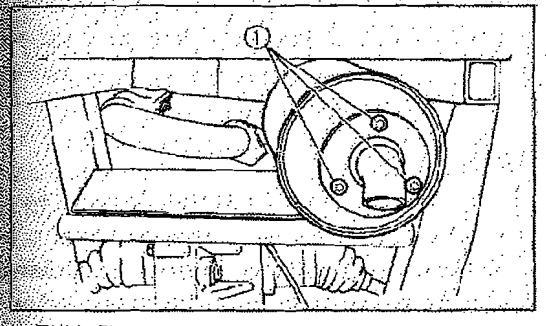

1. Bolt (× 3)

2. Remove the tailpipe by pulling it out of the muffler.
3. Tap the tailpipe lightly, and then use a wire brush to remove any carbon deposits from the spark arrester portion of the tailpipe and inside of the tailpipe housing.

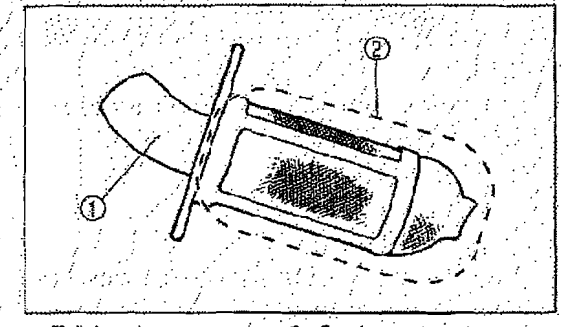

1. Tailpipe 2. Spark arrester

4. Insert the tailpipe into the muffler and align the bolt holes.
5. Install the tailpipe by installing the bolts, and then tighten the bolts to the specified torque.

* Tightening torque:
Tailpipe bolt:
9.5 N·m (0.95 m·kgf, 6.9 ft·lbf)

IDI 080827HWE0001 - Exhibit "B"

⚠ WARNING

POTENTIAL HAZARD
Improper cleaning of the spark arrester.
Hot exhaust system
WHAT CAN HAPPEN
Could injure the eyes.
Could cause burns.
Could cause carbon monoxide poisoning, possibly leading to death.
Could start a fire.
HOW TO AVOID THE HAZARD
When cleaning the spark arrester:
Always let the exhaust system cool prior to touching exhaust components.
Do not start the engine when cleaning the exhaust system.

Carburetor adjustment

The carburetor is a vital part of the engine and requires very sophisticated adjustment. Most adjusting should be left to a Yamaha dealer who has the professional knowledge and experience to do so. However, the idling speed may be performed by the owner as a part of the usual maintenance routine.

CAUTION:

The carburetor was set at the Yamaha factory after many tests. If the settings are disturbed by someone without sufficient technical knowledge, poor engine performance and damage may result.

engine and
tment. Most
naha dealer
dge and ex-
dling speed
as a part of

maha fac-
ttings are
sufficient
ne perfor-

Idle speed adjustment

NOTE:
A diagnostic tachometer must be used for this procedure.

1. Start the engine and warm it up for a few minutes at approximately 1,000 to 2,000 r/min. Occasionally rev the engine to 4,000 to 5,000 r/min. The engine is warm when it quickly responds to the throttle.
2. Remove the seats. (See page 4-20 for seat removal and installation procedures.)
3. Remove the console. (See page 8-8 for console removal and installation procedures.)
4. Connect the tachometer to the spark plug lead, and then set the idle to the specified idling speed by adjusting the throttle stop screw. Turn the screw in direction ⓐ to increase the engine speed, and in direction ⓑ to decrease the engine speed.

Specified idle speed:
1,450–1,550 r/min

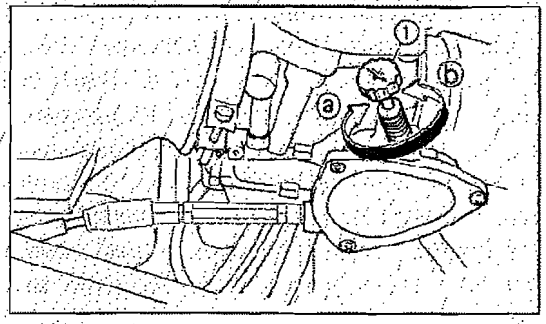

1. Throttle stop screw

5. Install the console.
6. Install the seats.

Valve clearance adjustment

The correct valve clearance changes with use, resulting in improper fuel/air supply or engine noise. To prevent this, the valve clearance must be adjusted regularly. This adjustment however, should be left to a professional Yamaha service technician.

IDI 080827HWE0001 - Exhibit "B"

Front brake pad check

Each brake pad is provided with wear indicator grooves, which allow you to check the brake pad wear without having to disassemble the brake. To check the brake pad wear, check the wear indicator grooves. If a brake pad has worn to the point that the wear indicator grooves have almost disappeared, have a Yamaha dealer replace the brake pads as a set.

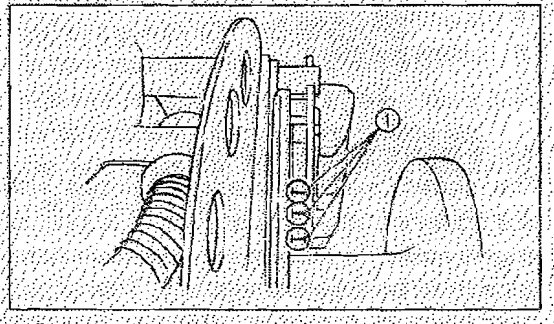

1. Brake pad wear indicator groove

NOTE:

The wheels need to be removed to check the brake pads. (See pages 8-40–8-41 for wheel removal and installation procedures.)

Rear

Each
tor gr
brake
ble th
check
pad h
tor gr
Yama
set.

1. Brak

to check the
-41 for wheel
res.)

Rear brake pad check

Each brake pad is provided with wear indicator grooves, which allow you to check the brake pad wear without having to disassemble the brake. To check the brake pad wear, check the wear indicator grooves. If a brake pad has worn to the point that the wear indicator grooves have almost disappeared, have a Yamaha dealer replace the brake pads as a set.

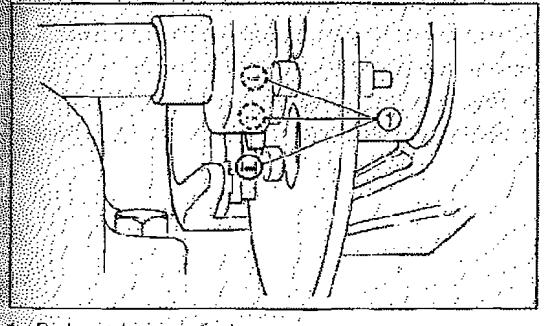

1. Brake pad wear indicator groove

Checking the brake fluid level

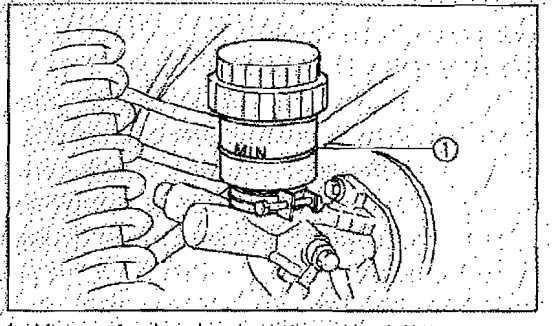

1. Minimum level mark

Insufficient brake fluid may let air enter the brake system, possibly causing the brakes to become ineffective.

Before riding, check that the brake fluid is above the minimum level mark and replenish if necessary. A low brake fluid level may indicate worn brake pads and/or brake system leakage. If the brake fluid level is low, be sure to check the brake pads for wear and the brake system for leakage.

IDI 080827HWE0001 - Exhibit "B"

The brake fluid reservoir is located under the hood. (See pages 8-6–8-7 for hood opening and closing procedures.)

Observe these precautions:

- When checking the fluid level, make sure the top of the brake fluid reservoir is level.
- Use only the recommended quality brake fluid. Otherwise, the rubber seals may deteriorate, causing leakage and poor braking performance.

Recommended brake fluid: DOT 4

- Refill with the same type of brake fluid. Mixing fluids may result in a harmful chemical reaction and lead to poor braking performance.
- Be careful that water does not enter the brake fluid reservoir when refilling. Water will significantly lower the boiling point of the fluid and may result in vapor lock.
- Brake fluid may deteriorate painted surfaces or plastic parts. Always clean up spilled fluid immediately.
- Have a Yamaha dealer inspect the brake system if the brake fluid level goes down.

Brake fluid replacement

Complete fluid replacement should be done only by trained Yamaha service personnel. Have a Yamaha dealer replace the following components during periodic maintenance or when they are damaged or leaking.

- Replace the oil seals every two years.
- Replace the brake hoses every four years.

painted surfac-
lean up spilled

ect the brake
goes down.

ould be done
e personnel.
the following
intenance or
ng
o years.
y four years.

Checking the brake pedal

Have a Yamaha dealer check the brakes at the intervals specified in the periodic maintenance and lubrication chart. There should be no free play in the brake pedal. The brakes should operate smoothly and there should be no brake drag. If the brakes feel soft or spongy, this could indicate air in the brake system. Have a Yamaha dealer check the brake system if necessary.

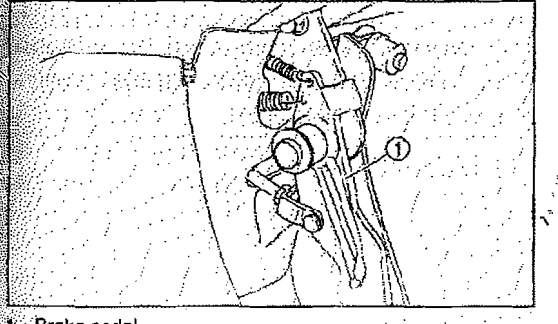

1. Brake pedal

⚠ WARNING

POTENTIAL HAZARD

Operating with improperly serviced or adjusted brakes.

WHAT CAN HAPPEN

You could lose braking ability, which could lead to an accident.

HOW TO AVOID THE HAZARD

After servicing:

- **Make sure the brakes operate smoothly and that the brake pedal position is correct.**
- **Make sure the brakes do not drag.**
- **All air must be bled from the brake system.**

Replacement of brake components requires professional knowledge. These procedures should be performed by a Yamaha dealer.

IDI 080827HWE0001 - Exhibit "B"

Parking brake lever free play adjustment

Periodically check the parking brake lever free play and adjust it if necessary.

1. Shift the drive select lever into low gear "L".
2. Remove the seats. (See page 4-20 for seat removal and installation procedures.)
3. Remove the console. (See page 8-8 for console removal and installation procedures.)
4. Check the parking brake lever free play. The maximum free play is equal to one click of the parking brake lever. If necessary, adjust the free play as follows.

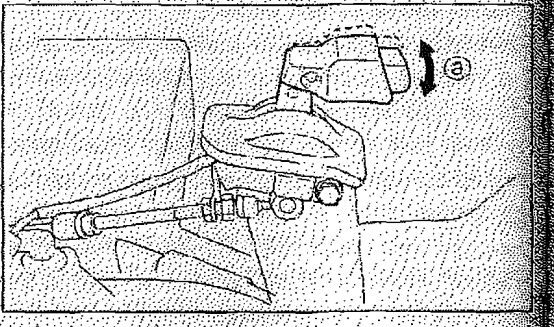

a. Parking brake lever free play

NOTE:

The parking brake lever must be released when checking and adjusting the parking brake lever free play.

5. Loosen the locknut.

IDI 080827HWE0001 - Exhibit "B"

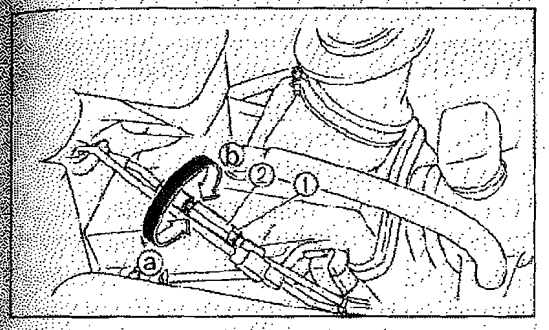

1. Locknut 2. Adjusting nut

6. Turn the adjusting nut in direction ⓐ to increase the free play or in direction ⓑ to decrease the free play.
7. Tighten the locknut.
8. Install the console.
9. Install the seats.

Brake light switch adjustment

The brake light switch, which is activated by the brake pedal, is properly adjusted when the brake light comes on just before braking takes effect. If necessary, adjust the brake light switch as follows.

1. Open the hood. (See pages 8-6–8-7 for hood opening and closing procedures.)
2. Turn the adjusting nut while holding the brake light switch in place. To make the brake light come on earlier, turn the adjusting nut in direction ⓐ. To make the brake light come on later, turn the adjusting nut in direction ⓑ.

IDI 080827HWE0001 - Exhibit "B"

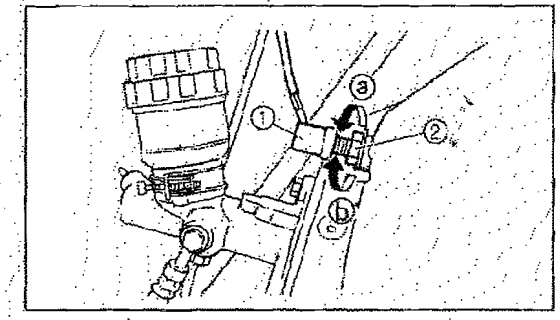

1. Brake light switch 2. Adjusting nut

3. Close the hood.

Cable inspection and lubrication

⚠ WARNING

POTENTIAL HAZARD

Damaged control cables.

WHAT CAN HAPPEN

Corrosion can result when the outer covering of control cables becomes damaged. Cables can also become frayed or kinked. Operation of controls could be restricted, which could cause an accident or injury.

HOW TO AVOID THE HAZARD

Inspect cables frequently. Replace damaged cables.

Lubricate the inner cables and the cable ends. If the cables do not operate smoothly, ask a Yamaha dealer to replace them.

Recommended lubricant:
Yamaha chain and cable lube or SAE 10W30 motor oil

Brake pedal and accelerator pedal lubrication

Lubricate the pivoting parts.

Recommended lubricant:
Lithium-soap-based grease
(all-purpose grease)

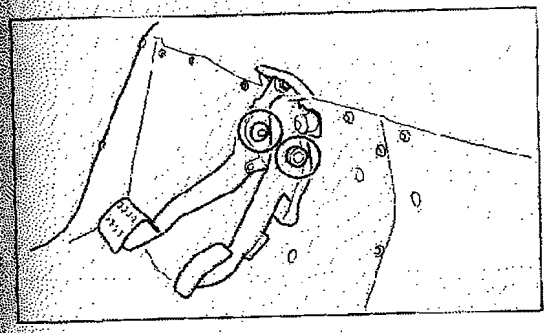

Rear knuckle upper and lower pivot lubrication

Lubricate the knuckle upper and lower pivots with a grease gun.

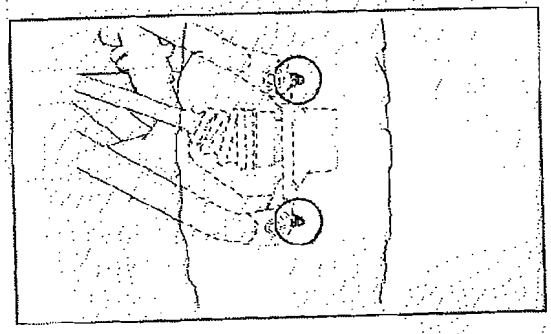

Recommended lubricant:
Lithium-soap-based grease

IDI 080827HWE0001 - Exhibit "B"

Steering shaft lubrication

Lubricate the pivot points.

Recommended lubricant:
Lithium-soap-based grease
(all purpose grease)

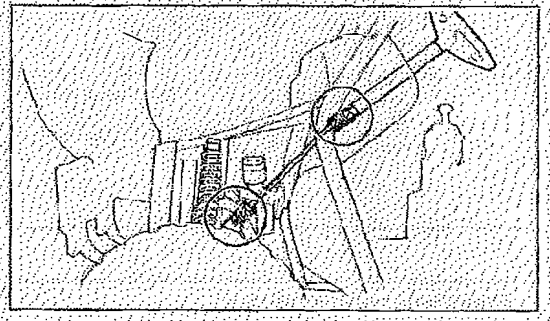

Wheel removal

1. Loosen the wheel nuts.
2. Elevate the vehicle and place a suitable stand under the frame.
3. Remove the nuts from the wheel.
4. Remove the wheel.

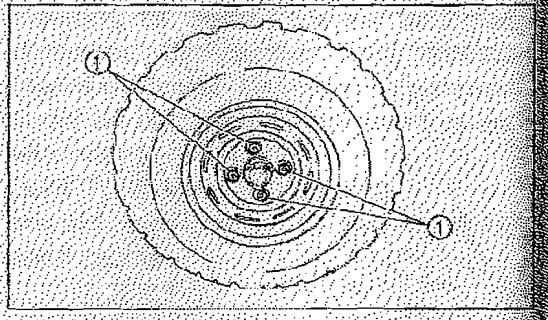

1. Nut (× 4)

suitable

Wheel installation

1. Install the wheel and the nuts.

NOTE:

- The arrow mark ⇦ on the tire must point toward the rotating direction of the wheel.
- Tapered nuts are used for both the front and rear wheels. Install the nut with its tapered side towards the wheel.

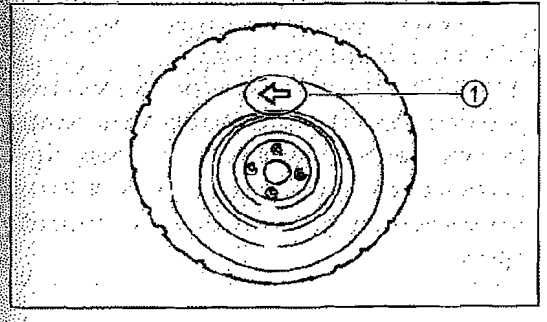

1. Arrow mark

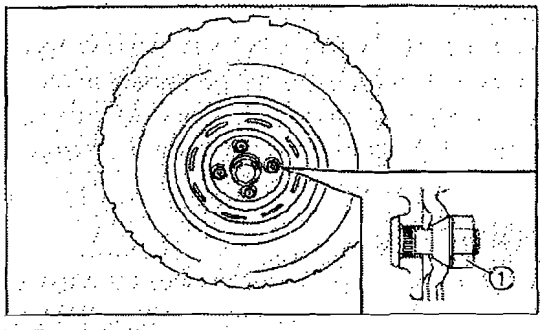

1. Tapered nut

2. Lower the vehicle so that the wheel is on the ground.
3. Tighten the wheel nuts to the specified torque.

Wheel nut torque:
Front: 55 Nm (5.5 m·kgf, 40 ft·lbf)
Rear: 55 Nm (5.5 m·kgf, 40 ft·lbf)

IDI 080827HWE0001 - Exhibit "B"

Battery

This vehicle is equipped with a sealed-type battery. Therefore it is not necessary to check the electrolyte or add distilled water in the battery. If the battery seems to have discharged, consult a Yamaha dealer.

CAUTION:

Do not try to remove the sealing caps of the battery cells. You may damage the battery.

⚠ WARNING

POTENTIAL HAZARD

Failure to handle batteries or battery electrolyte carefully.

WHAT CAN HAPPEN

You could be poisoned. You could be severely burned by the sulfuric acid in battery electrolyte. Batteries produce explosive gases.

HOW TO AVOID THE HAZARD

Avoid contact with skin, eyes or clothing. Always shield eyes when working near batteries. Keep out of reach of children.

Antidote:

EXTERNAL: Flush with water.

INTERNAL: Drink large quantities of water or milk. Follow with milk of magnesia, beaten egg or vegetable oil. Get prompt medical attention.

EYES: Flush with water for 15 minutes and get prompt medical attention. Keep batteries away from sparks, flames, cigarettes or other sources of ignition. Ventilate when charging or using in a closed space.

IDI 080827HWE0001 - Exhibit "B"

Battery maintenance

1. When the vehicle is not used for a month or longer, remove the battery and store it in a cool, dark place. Completely recharge the battery before reinstallation.

CAUTION:

A special battery charger (constant voltage/ampere or constant voltage) is required for recharging a sealed-type battery. Using a conventional battery charger may shorten the battery life.

2. Always make sure the connections are correct when putting the battery back in the vehicle.

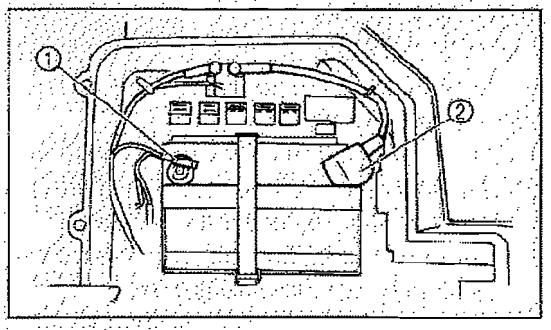

1. Negative battery lead 2. Positive battery lead

IDI 080827HWE0001 - Exhibit "B"

Fuse replacement

The main fuse and the fuse box are located under the hood. (See pages 8-6–8-7 for hood opening and closing procedures.)

If a fuse is blown, turn off the main switch and install a new fuse of the specified amperage. If a fuse is blown, replace it as follows.

1. Remove the battery compartment cover by lifting it up and pulling it out.

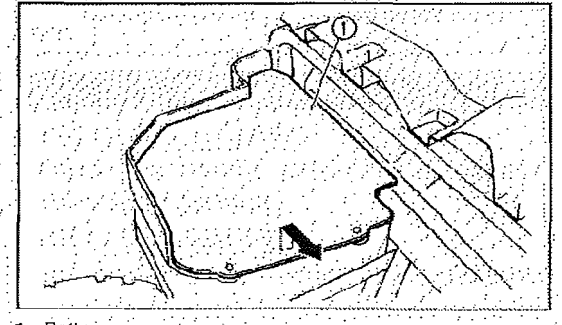

1. Battery compartment cover

2. Turn the key to "OFF" and turn off the electrical circuit in question.

CAUTION:

To prevent accidental short-circuiting, turn off the main switch when checking or replacing a fuse.

3. Remove the blown fuse, and then install a new fuse of the specified amperage.

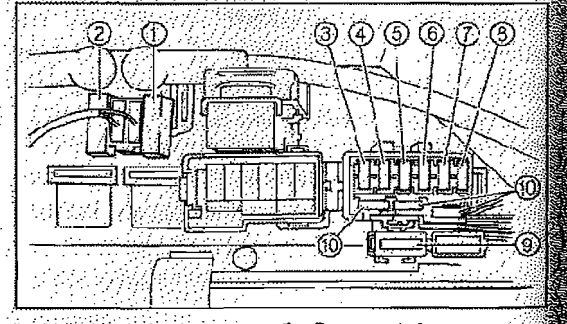

1. Main fuse
2. Spare main fuse
3. Headlight fuse
4. Ignition fuse
5. Auxiliary DC jack fuse
6. Four-wheel-drive fuse
7. Signaling system fuse
8. Backup fuse (for optional odometer and clock)
9. Carburetor warmer fuse
10. Spare fuse (× 3)

Specifi
Main
Heat
Ignit
Auxil
Sign
Carb
Four
Back

4. Turn
elec
devi
5. If the
a Y
syst
6. Insta
7. Clos

Specified fuses:	
Main fuse:	30.0 A
Headlight fuse:	15.0 A
Ignition fuse:	10.0 A
Auxiliary DC jack fuse:	10.0 A
Signaling system fuse:	10.0 A
Carburetor warmer fuse:	10.0 A
Four-wheel-drive fuse:	3.0 A
Backup fuse:	10.0 A

4. Turn the key to "ON" and turn on the electrical circuit in question to check if the device operates.
5. If the fuse immediately blows again, have a Yamaha dealer check the electrical system.
6. Install the battery compartment cover.
7. Close the hood.

⚠ WARNING

POTENTIAL HAZARD

Using an improper fuse

WHAT CAN HAPPEN

An improper fuse can cause damage to the electrical system, which could lead to a fire.

HOW TO AVOID THE HAZARD

Always use a fuse of the specified rating. Never use a material in place of the proper fuse.

IDI 080827HWE0001 - Exhibit "B"

Replacing a headlight bulb

If a headlight bulb burns out, replace it as follows.

1. Lift the hood up. (See pages 8-6–8-7 for hood opening and closing procedures.)
2. Remove the bulb holder cover at the rear of the headlight by pulling it off.

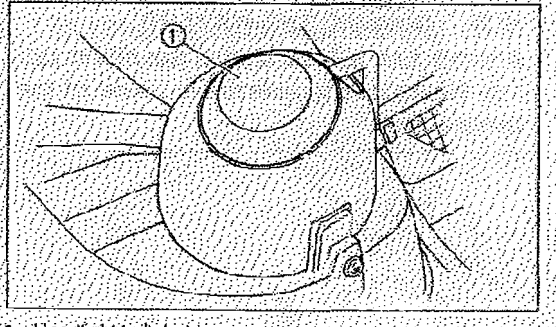

1. Headlight bulb holder cover

3. Disconnect the headlight coupler by lifting the tab as shown and pulling out the coupler.

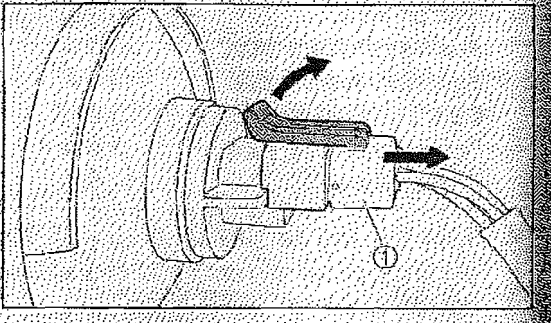

1. Headlight coupler

4. Remove the headlight bulb holder assembly by turning it counterclockwise.

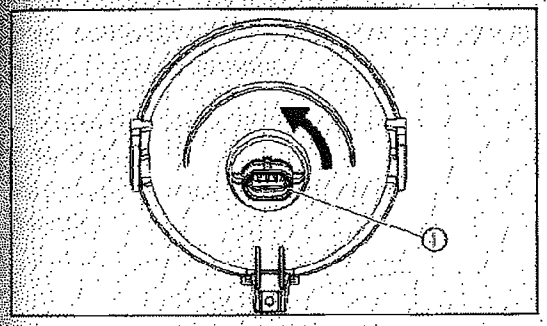

1. Headlight bulb holder assembly

NOTE:
The headlight bulb cannot be removed from the headlight bulb holder. To replace the headlight bulb, replace the headlight bulb holder assembly.

⚠ WARNING

POTENTIAL HAZARD
A headlight bulb is hot when it is on and immediately after it is turned off.

WHAT CAN HAPPEN
You can be burned, or a fire could start if the bulb touches something flammable.

HOW TO AVOID THE HAZARD
Wait for the bulb to cool before touching or removing it.

5. Install a new headlight bulb holder assembly by inserting it and turning it clockwise.

IDI 080827HWE0001 - Exhibit "B"

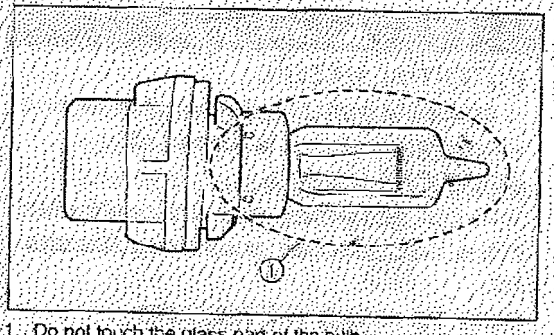

1. Do not touch the glass part of the bulb

CAUTION:

Do not touch the glass part of the headlight bulb to keep it free from oil, otherwise the transparency of the glass, the luminosity of the bulb, and the bulb life will be adversely affected. Thoroughly clean off any dirt and fingerprints on the headlight bulb using a cloth moistened with alcohol or thinner.

6. Connect the headlight coupler.
7. Install the headlight bulb holder cover at the rear of the headlight.
8. Close the hood.

IDI 080827HWE0001 - Exhibit "B"

er cover at

Headlight beam adjustment

CAUTION:

It is advisable to have a Yamaha dealer make this adjustment.

To raise the beam, turn the adjusting screw in direction ⓐ.
To lower the beam, turn the adjusting screw in direction ⓑ.

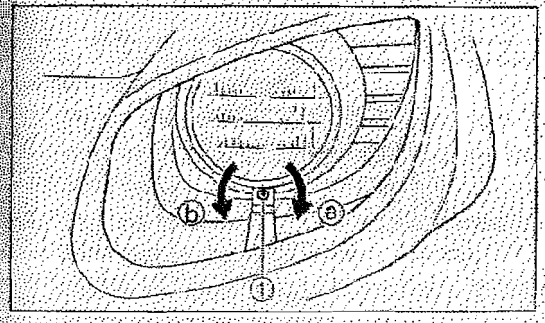

1. Headlight beam adjusting screw

IDI 080827HWE0001 - Exhibit "B"

Tail/brake light bulb replacement

If a tail/brake light bulb burns out, replace it as follows:

1. Remove panel A (if replacing the left tail/brake bulb) or panel B (if replacing the right tail/brake bulb) by removing the quick fasteners and bolts.

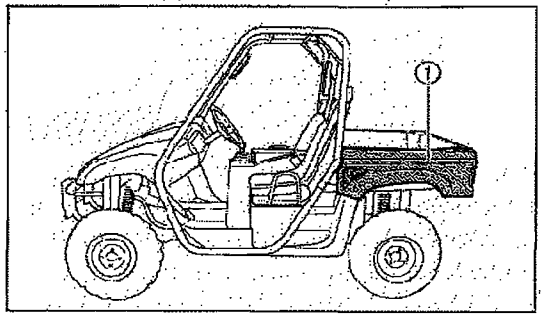

1. Panel A

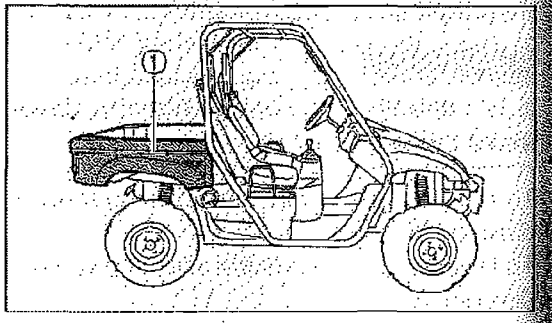

1. Panel B

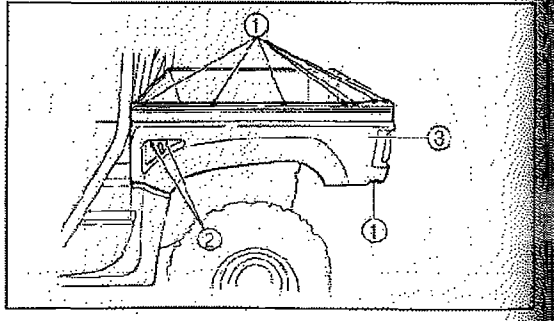

1. Quick fastener (× 8) 2. Bolt (× 2)
3. Panel A

IDI 080827HWE0001 - Exhibit "B"

2. Remove the bulb holder (together with the bulb) by turning it counterclockwise.

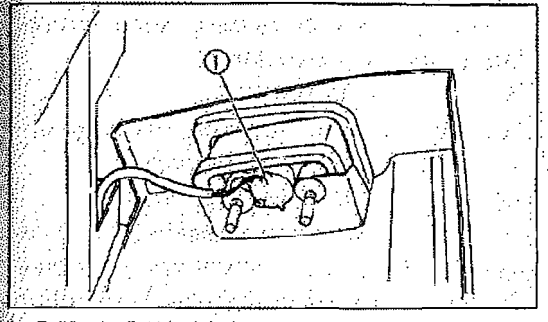

1. Tail/brake light bulb holder

3. Push the defective bulb in and turn it counterclockwise to remove it from the bulb holder.
4. Push a new bulb in and turn it clockwise to install in the bulb holder.
5. Install the bulb holder (together with the bulb) by turning it clockwise.
6. Install the panel by installing the quick fasteners and bolts, and then tighten the bolts to the specified torque.

Tightening torque:
Panel bolt:
6.5 N·m (0.65 m·kgf, 4.7 ft·lbf)

IDI 080827HWE0001 - Exhibit "B"

Troubleshooting

Although Yamaha vehicles receive a rigid inspection before shipment from the factory, trouble may occur during operation. Any problem in the fuel, compression, or ignition systems can cause poor starting and loss of power. The troubleshooting chart describes a quick, easy procedure for making checks. If your vehicle requires any repair, take it to a Yamaha dealer.

The skilled technicians at a Yamaha dealership have the tools, experience, and know-how to properly service your vehicle. Use only genuine Yamaha parts on your vehicle. Imitation parts may look like Yamaha parts, but they are often inferior. Consequently, they have a shorter service life and can lead to expensive repair bills.

⚠ WARNING

POTENTIAL HAZARD

Checking the fuel system while smoking or near an open flame.

WHAT CAN HAPPEN

Fuel can ignite or explode, causing severe injury or property damage.

HOW TO AVOID THE HAZARD

Do not smoke when checking the fuel system. Make sure there are no open flames or sparks in the area, including pilot lights from water heaters or furnaces.

IDI 080827HWE0001 - Exhibit "B"

Troubleshooting charts

Starting problems or poor engine performance

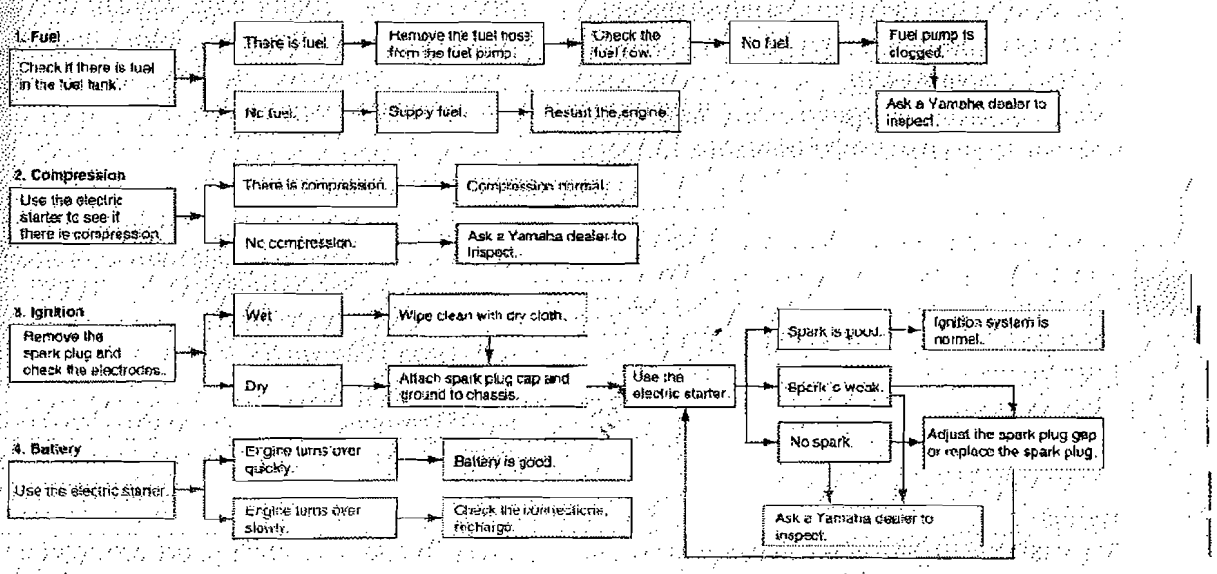

IDI 080827HWE0001 - Exhibit "B"

Engine overheating

⚠ WARNING

POTENTIAL HAZARD

Removing the radiator cap when the engine and radiator are still hot.

WHAT CAN HAPPEN

You could be burned by hot fluid and steam blown out under pressure.

HOW TO AVOID THE HAZARD

Wait for the engine to cool before removing the radiator cap. Always use a thick rag over the cap. Allow any remaining pressure to escape before completely removing the cap.

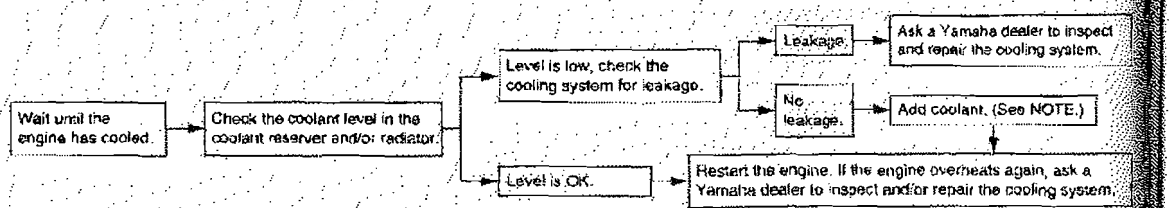

NOTE:

If it is difficult to get the recommended coolant, tap water can be temporarily used, provided that it is changed to the recommended coolant as soon as possible.

IDI 080827HWE0001 - Exhibit "B"

CLEANING AND STORAGE

A. CLEANING

Frequent, thorough cleaning of your vehicle will not only enhance its appearance but will improve its general performance and extend the useful life of many components.

1. Before cleaning the vehicle:
   a. Block off the end of the exhaust pipe to prevent water entry. A plastic bag and strong rubber band may be used.
   b. Make sure the spark plug and all filler caps are properly installed.
2. If the engine case is excessively greasy, apply degreaser with a paint brush. Do not apply degreaser to the wheel axles.
3. Rinse the dirt and degreaser off with a garden hose. Use only enough pressure to do the job.

CAUTION:

Excessive water pressure may cause water seepage and deterioration of wheel bearings, brakes, transmission seals and electrical devices. Many expensive repair bills have resulted from improper high pressure detergent applications such as those available in coin-operated car washers.

4. Once the majority of the dirt has been hosed off, wash all surfaces with warm water and mild, detergent-type soap. An old toothbrush or bottle brush is handy for hard-to-get-at places.
5. Rinse the vehicle off immediately with clean water and dry all surfaces with a chamois, clean towel or soft absorbent cloth.

9

IDI 080827HWE0001 - Exhibit "B"

6. Clean the seats with a vinyl upholstery cleaner to keep the cover pliable and glossy.
7. Automotive type wax may be applied to all painted and chrome plated surfaces. Avoid combination cleaner-waxes. Many contain abrasives which may scratch the paint or protective finish. When finished, start the engine and let it idle for several minutes.

⚠ WARNING

POTENTIAL HAZARD

Operation with wet brakes after washing.

WHAT CAN HAPPEN

Wet brakes may have reduced stopping ability, increasing the chance of an accident.

HOW TO AVOID THE HAZARD

Test the brakes after washing. Apply the brakes several times at slow speeds to let friction dry out the linings.

IDI 080827HWE0001 - Exhibit "B"

B. STORAGE

Long term storage (60 days or more) of your vehicle will require some preventive procedures to guard against deterioration. After thoroughly cleaning the vehicle, prepare for storage as follows:

1. Fill the fuel tank with fresh fuel and add the specified amount of Yamaha Fuel Stabilizer and Conditioner or equivalent product. Operate the vehicle for at least 5 minutes to distribute treated fuel through the fuel system.
2. Drain the fuel from the carburetor float chamber into a clean container by loosening the drain bolt; this will help prevent fuel deposits from building up. Pour the drained fuel into the fuel tank.

Specified amount:
1 oz of stabilizer to each gallon of fuel (or 7.5 cc of stabilizer to each liter of fuel)

NOTE:
Use of fuel stabilizer and conditioner eliminates the need to drain the fuel system. Consult a Yamaha dealer if the fuel system needs to be drained instead.

3. Remove the spark plug, pour about one tablespoon of SAE 10W30 or 20W40 motor oil in the spark plug hole and reinstall the spark plug. Ground the spark plug wire and turn the engine over several times to coat the cylinder wall with oil.
4. Lubricate all control cables.
5. Block up the frame to raise all wheels off the ground.
6. Tie a plastic bag over the exhaust pipe outlet to prevent moisture from entering.
7. If storing in a humid or salt-air atmosphere, coat all exposed metal surfaces with a light film of oil. Do not apply oil to any rubber parts or the seat covers.

IDI 080827HWE0001 - Exhibit "B"

8. Remove the battery and charge it. Store it in a dry place and recharge it once a month. Do not store the battery in an excessively warm or cold place (less than 0 °C (30 °F) or more than 30 °C (90 °F)).

NOTE:
Make any necessary repairs before storing the vehicle.

IDI 080827HWE0001 - Exhibit "B"

SPECIFICATIONS

Model	YXR66FAV
Dimensions:	
Overall length	2,685 mm (113.6 in)
Overall width	1,385 mm (54.5 in)
Overall height	1,853 mm (73.0 in)
Seat height	818 mm (32.2 in)
Wheelbase	1,910 mm (75.2 in)
Ground clearance	280 mm (11.02 in)
Minimum turning radius	3,900 mm (153.5 in)
Basic weight:	
With oil and full fuel tank	506.0 kg (1,116 lb)
Engine:	
Engine type	Liquid cooled 4-stroke, SOHC
Cylinder arrangement	Forward-inclined single cylinder
Displacement	660.0 cm^3
Bore x stroke	100.0 x 84.0 mm (3.94 x 3.31 in)
Compression ratio	9.10 :1
Starting system	Electric starter
Lubrication system	Wet sump

10

IDI 080827HWE0001 - Exhibit "B"

Model	YXR66FAV
Engine oil: Type	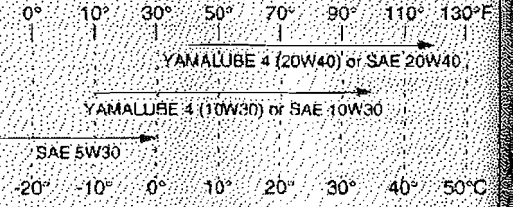
Recommended engine oil classification	API Service SE, SF, SG type or higher
	CAUTION: **In order to prevent clutch slippage (since the engine oil also lubricates the clutch), do not mix any chemical additives. Do not use oils with a diesel specification of "CD" or oils of a higher quality than specified. In addition, do not use oils labeled "ENERGY CONSERVING II" or higher.**
Quantity:	
Without oil filter cartridge replacement	1.90 L (1.67 Imp qt, 2.01 US qt)
With oil filter cartridge replacement	2.00 L (1.76 Imp qt, 2.11 US qt)

IDI 080827HWE0001 - Exhibit "B"

Model	YXR66FAV
Final gear case oil:	
Type	SAE80 API GL-4 Hypoid gear oil
Quantity:	0.25 L (0.22 Imp qt, 0.26 US qt)
Differential gear case oil:	
Type	SAE80 API GL-4 Hypoid gear oil
Quantity:	0.32 L (0.28 Imp qt, 0.34 US qt)
Radiator capacity (including all routes):	2.50 L (2.20 Imp qt, 2.64 US qt)
Air filter:	
Engine	Wet element
Intake duct	Dry element
Fuel:	
Type	UNLEADED GASOLINE ONLY
Fuel tank capacity	30.0 L (6.60 Imp gal, 7.93 US gal)
Carburetor:	
Type/quantity	BSR42/1
Manufacturer	MIKUNI
Spark plug:	
Type/manufacturer	DPR8EA-9/NGK
Spark plug gap	0.8–0.9 mm (0.031–0.035 in)
Clutch type:	Wet, centrifugal automatic

IDI 080827HWE0001 - Exhibit "B"

Model		YXR66FAV
Transmission:		
Primary reduction system		V-belt
Secondary reduction system		Shaft drive
Secondary reduction ratio		41/21 × 24/18 × 33/9 (9.544)
Transmission type		V-belt automatic
Operation		Right hand operation
Reverse gear		25/17 (1.471)
Sub transmission ratio	low	35/17 (2.058)
	high	28/19 (1.473)
Chassis:		
Frame type		Steel tube frame
Caster angle		5.0°
Trail		26.0 mm (1.02 in)
Tire:		
Type		Tubeless
Size	front	25 × 8-12NHS
	rear	25 × 10-12NHS

IDI 080827HWE0001 - Exhibit "B"

Model		YXR66FAV
Brakes:		
System		Front and rear unified
Type	front	Dual disc brake
	rear	Single disc brake
Operation		Foot operation
Suspension:		
Front suspension		Double wishbone
Rear suspension		Double wishbone
Shock absorber:		
Front shock absorber		Coil spring/oil damper
Rear shock absorber		Coil spring/oil damper
Wheel travel:		
Front wheel travel		185.0 mm (7.28 in)
Rear wheel travel		185.0 mm (7.28 in)
Electrical:		
Ignition system		DC CDI
Generator system		AC magneto
Battery type		U1L-11
Battery capacity		12 V 28.0 Ah
Headlight type:		Halogen bulb

IDI 080827HWE0001 - Exhibit "B"

Model	YXR66FAV
Bulb voltage, wattage × quantity:	
Headlight	12 V 30 W/30.0 W × 2
Tail/brake light	12 V 5 W/21.0 W × 2
Indicator lights:	
Neutral indicator light	12 V 1.7 W × 1
	LED (special edition models)
Reverse indicator light	12 V 1.7 W × 1
	LED (special edition models)
Coolant temperature warning light	12 V 1.7 W × 1
	LED (special edition models)
Parking brake indicator light	12 V 1.7 W × 1
	LED (special edition models)
Four-wheel-drive indicator light	12 V 1.7 W × 1
	LCD (special edition models)
Differential gear lock indicator light	12 V 1.7 W × 1
	LED (special edition models)
High-range indicator light (special edition models)	LED
Low-range indicator light (special edition models)	LED

IDI 080827HWE0001 - Exhibit "B"

Model	YXR66FAV
Specified fuses:	
Main fuse	30.0 A
Headlight fuse	15.0 A
Ignition fuse	10.0 A
Auxiliary DC jack fuse	10.0 A
Four-wheel-drive fuse	3.0 A
Carburetor warmer fuse	10.0 A
Signaling system fuse	10.0 A
Backup fuse	10.0 A

IDI 080827HWE0001 - Exhibit "B"

NOISE REGULATION

TAMPERING WITH NOISE CONTROL SYSTEM PROHIBITED:
Federal law prohibits the following acts or the causing thereof: (1) The removal or rendering inoperative by any person other than for purposes of maintenance, repair, or replacement of any device or element of design incorporated into any new vehicle for the purpose of noise control prior to its sale or delivery to the ultimate purchaser or while it is in use or (2) the use of the vehicle after such device or element of design has been removed or rendered inoperative by any person.

"AMONG THOSE ACTS PRESUMED TO CONSTITUTE TAMPERING ARE THE ACTS LISTED BELOW."
These acts include tampering with the following systems; i.e., modification, removal, etc.

Exhaust system	Muffler Exhaust pipe Silencer
Intake system	Air cleaner case Air cleaner element Intake duct

Copi
ment
mind
work.

month
1
3
6
12
18
24
30
36
42
48
54
60

IDI 080827HWE0001 - Exhibit "B"

ng inop-
any de-
rol prior
cle after
on.
LISTED

MAINTENANCE RECORD

Copies of work orders and/or receipts for parts you purchase and install will be required to document maintenance done in accordance with the warranty. The chart below is printed only as a reminder to you that the maintenance work is required. It is not acceptable proof of maintenance work.

MAINTENANCE INTERVAL			DATE OF SERVICE	MILEAGE	SERVICING DEALER NAME AND ADDRESS	REMARKS
month	km (mi)	hours				
1	320 (200)	20				
3	1,200 (750)	75				
6	2,400 (1,500)	150				
12	4,800 (3,000)	300				
18	7,200 (4,500)	450				
24	9,600 (6,000)	600				
30	12,000 (7,500)	750				
36	14,400 (9,000)	900				
42	16,800 (10,500)	1,050				
48	19,200 (12,000)	1,200				
54	21,600 (13,500)	1,350				
60	24,000 (15,000)	1,500				

11
12

IDI 080827HWE0001 - Exhibit "B"

YAMAHA MOTOR CORPORATION, U.S.A.
SIDE × SIDE VEHICLE LIMITED WARRANTY

Yamaha Motor Corporation, U.S.A. hereby warrants that new Yamaha Side × Side vehicles purchased from an authorized Yamaha Side × Side Vehicle dealer in the continental United States will be free from defects in material and workmanship for the period of time stated herein, subject to certain stated limitations.

THE PERIOD OF WARRANTY for YXR OR YXP Yamaha Side x Side vehicles shall be six (6) months from the date of purchase, with no mileage limitation.

MODELS EXCLUDED FROM WARRANTY, include those used for non-Yamaha-authorized renting, leasing, or other commercial purposes.

DURING THE PERIOD OF WARRANTY any authorized Yamaha Side × Side Vehicle dealer will free of charge, repair or replace, at Yamaha's option, any part adjudged defective by Yamaha due to faulty workmanship or material from the factory. Parts used in warranty repairs will be warranted for the balance of the product's warranty period. All parts replaced under warranty become property of Yamaha Motor Corporation, U.S.A.

GENERAL EXCLUSIONS from this warranty shall include any failures caused by:

a. Competition or racing use.
b. Installation of parts or accessories that are not qualitatively equivalent to genuine Yamaha parts.
c. Abnormal strain, neglect, or abuse.
d. Lack of proper maintenance.
e. Accident or collision damage.
f. Modification to original parts.
g. Damage due to improper transportation.

SPECIFIC EXCLUSIONS from this warranty shall include parts replaced due to normal wear or routine maintenance; such as spark plugs, oil, oil filter, air filter, and brake shoes.

THE CUSTOMER'S RESPONSIBILITY under this warranty shall be to:

1. Operate and maintain the Side-by-Side vehicle as specified in the appropriate Owner's Manual; and
2. Give notice to an authorized Yamaha Side × Side Vehicle dealer of any and all apparent defects within ten (10) days after discovery, and make the machine available at that time for inspection and repairs at such dealer's place of business.

WARRANTY TRANSFER: To transfer the warranty from the original purchaser to any subsequent purchaser(s), it is imperative that the Side-by-Side vehicle be inspected and registered for warranty by an authorized Yamaha Side-by-Side Vehicle dealer. In order for this warranty to remain in effect, this inspection and registration must take place within ten (10) days after transfer of ownership to the subsequent purchaser. A reasonable dealer imposed fee may be charged for this inspection.

EMISSION CONTROL SYSTEM WARRANTY

Yamaha Motor Corporation, USA also warrants to the ultimate purchaser and each subsequent purchaser of each 2006 and later model Yamaha Side × Side covered by this warranty that the vehicle is designed, built, and equipped so as to conform at the time of sale with all U. S. emissions standards applicable at the time of manufacture and that it is free from defects in materials and workmanship which would cause it not to meet these standards within the period listed immediately below. Failures other than those resulting from defects in material or workmanship which arise solely as a result of owner abuse and/or lack of proper maintenance are not covered by this warranty.

All Models

Thirty (30) months from the original purchase date

YAMAHA MOTOR CORPORATION, U.S.A. MAKES NO OTHER WARRANTY OF ANY KIND, EXPRESSED OR IMPLIED. ALL IMPLIED WARRANTIES OF MERCHANTABILITY AND FITNESS FOR A PARTICULAR PURPOSE WHICH EXCEED THE OBLIGATIONS AND TIME LIMITS STATED IN THIS WARRANTY ARE HEREBY DISCLAIMED BY YAMAHA MOTOR CORPORATION, U.S.A. AND EXCLUDED FROM THIS WARRANTY.

SOME STATES DO NOT ALLOW LIMITATIONS ON HOW LONG AN IMPLIED WARRANTY LASTS, SO THE ABOVE LIMITATION MAY NOT APPLY TO YOU. ALSO EXCLUDED FROM THIS WARRANTY ARE ANY INCIDENTAL OR CONSEQUENTIAL DAMAGES INCLUDING LOSS OF USE. SOME STATES DO NOT ALLOW THE EXCLUSION OR LIMITATION OF INCIDENTAL OR CONSEQUENTIAL DAMAGES, SO THE ABOVE EXCLUSION MAY NOT APPLY TO YOU. THIS WARRANTY GIVES YOU SPECIFIC LEGAL RIGHTS, AND YOU MAY ALSO HAVE OTHER RIGHTS WHICH VARY FROM STATE TO STATE.

IDI 080827HWE0001 - Exhibit "B"

ION, U.S.A. MAKES
'KIND,EXPRESSED
WARRANTIES OF
ITNESS FOR A
ICH EXCEED THE
TS STATED IN THIS
DISCLAIMED BY
TION, U.S.A. AND
ANTY.

Y LIMITATIONS ON
RANTY LASTS, SO
OT APPLY TO YOU.
WARRANTY ARE
ENTIAL DAMAGES
OME STATES DO
OR LIMITATION OF
IAL DAMAGES. SO
OT APPLY TO YOU.
SPECIFIC LEGAL
IO HAVE OTHER
ATE TO STATE.

YAMAHA EXTENDED SERVICE (Y.E.S.)

Keep your Yamaha protected even after your warranty expires with genuine Yamaha Extended Service (Y.E.S.).

- Y.E.S. is designed and administered by Yamaha Motor Corporation to provide maximum owner satisfaction. You get uninterrupted factory-backed coverage for extra peace of mind.
- Y.E.S. is flexible. You choose the plan that's right for you: 12 months, 24 months, or 36 months beyond your warranty period.
- Y.E.S. is designed and administered by the same Yamaha people who handle your warranty – and it shows in the comprehensive coverage benefits. There are no mileage limitations. Coverage isn't limited to "moving parts" or the "drive train" like many other plans. And Y.E.S. covers manufacturing defects just like the warranty. See the sample contract at your Yamaha dealer to see how comforting uninterrupted factory-backed protection can be.
- You don't have to pay anything for covered repairs. There's no deductible to pay, and repairs aren't "pro-rated." You don't have any "out-of-pocket" expenses for covered repairs.
- In addition, Travel and Recreation Interruption Protection (TRIP) is included at no extra cost. TRIP gives you up to $150 reimbursement per occurrence for any reasonable expenses you incur because your Yamaha needs covered service: replacement vehicle rental, emergency towing, phone calls, even food and lodging when you are away from home. This superb coverage goes into effect when you purchase Y.E.S., so it applies to any warranty repairs as well as covered repairs during your entire Y.E.S. plan period.
- Y.E.S. coverage is honored at any authorized Yamaha dealer nationwide.
- Y.E.S. coverage is transferable to a new owner if you sell or trade-in. That can make your Yamaha much more valuable!

This excellent Y.E.S. plan coverage is only available to Yamaha owners like you, and only while your Yamaha is still within the Yamaha Limited Warranty period. So visit your authorized Yamaha dealer to get all the facts. He can show you how easy it is to protect your investment with Yamaha Extended Service.

IDI 080827HWE0001 - Exhibit "B"

We urge you to act now. You'll get the excellent benefits of TRIP coverage right away, and you'll rest easy knowing you'll have strong factory-backed protection even after your Yamaha Limited Warranty expires. You can also save money: Y.E.S. costs less within the first 90 days after you buy your Yamaha. See your dealer today!

A special note
If visiting your dealer isn't convenient, contact Yamaha with your Primary ID number (your frame number). We'll be happy to help you get the Y.E.S. coverage you need.

Yamaha Service Marketing
P.O. Box 6555
Cypress, CA 90630

Y E S

YAMAHA EXTENDED SERVICE

IDI 080827HWE0001 - Exhibit "B"

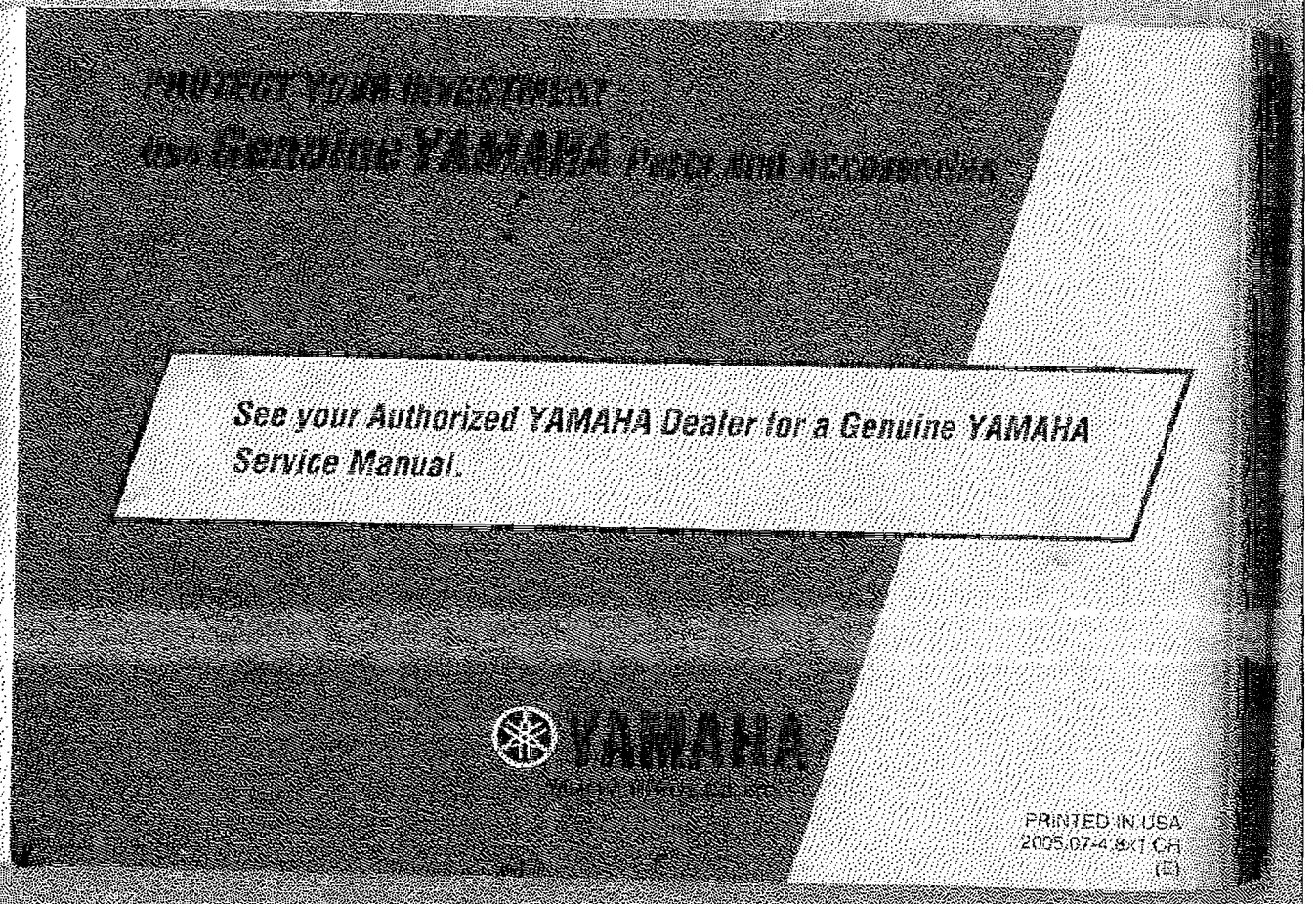

IDI 080827HWE0001 - Exhibit "C" - Sheriff's Department report - Five pages

INCIDENT REPORT

Supplement

ADMIN

AGENCY	ORI #	REPORT DATE	CASE NUMBER
Grant County Sheriffs Department	WI0220000	9/24/2008 11:26:02 AM	08-02428

DATE(S) OF INCIDENT	TIME(S) OF INCIDENT	EXCEPTIONAL CLEARANCE	Reporting Officer (ID/Name)
Start 08-24-2008	Start 11:26	N/A	00004 Breitenpreis,Jr.
End	End	EXCEPTIONAL CLEARANCE DATE	Assisting Officer (ID/Name)
			Reviewing Officer (ID/Name)
			Approving Officer (ID/Name)

OFFENSE

LOCATION OF INCIDENT	CASE STATUS
10035 CTY K LANCASTER WI	CLEARED

	STATUTE / UCR CODE	STATUTE DESCRIPTION / UCR CODE DESCRIPTION	STATUS COMPLETED OR ATTEMPTED
1			
2			
3			

BIAS MOTIVATION (OFFENSE 1 - 3)
1
2
3

LOCATION OF OFFENSE (OFFENSE 1 - 3)
1
2
3

TYPE CRIMINAL ACTIVITY
1
2
3

TYPE WEAPON/FORCE INVOLVED
1 AUTOMATIC
2 AUTOMATIC
3 AUTOMATIC

(For Burglary Only) NUMBER OF PREMISES ENTERED

METHOD OF ENTRY

OFFENDER(S) USED
___ ALCOHOL ___ DRUGS
___ COMPUTER EQUIP

Method of Operation

Brief Description of Incident: EMS Response - EMS Response to Scene

VICTIM

VICTIM NUMBER: 1	VICTIM NAME: (b)(3) CISA Section 2(5)(A)(B)	NOK/C PHONE	CONNECTED TO OFFENSES
ADDRESS: (Street, City, State, ZIP) (b)(3) CISA Section 2(5)(A)(B)		(b)(3) CISA Section 2(5)(A)(B)	1 6 2 7 3 8 4 9 5 10

TYPE OF VICTIM	RACE	SEX	RESIDENT STATUS	ETHNICITY	AGE
LEO ACTIVITY	OTHER JUR	MALE			79

AGGRAVATED ASSAULT/HOMICIDE CIRCUMSTANCES
1
2

JUSTIFIABLE HOMICIDE CIRCUMSTANCE

INJURY TYPE

BROKEN BONES	NONE
POSS INT INJURIES	MINOR INJURY
SEVERE LACERATION	MAJOR INJURY
UNCONSCIOUSNESS	LOSS OF TEETH

RELATIONSHIP OF VICTIM TO OFFENDER 1 - 10
1 2 3 4 5
6 7 8 9 10

SEP-3-2008 11:14 FROM:GRANT COUNTY SHERIFF 608 723 2577 TO:14143000046 P:2/6

IDI 080827HWE0001 - Exhibit "C"

INCIDENT REPORT
NARRATIVE

AGENCY NAME	ORI #	REPORT DATE	CASE NUMBER
Grant County Sheriffs Department	WI0220000	8/24/2008 11:26:02 AM	08-02428

Narrative From CAD

Complaint Type: EMS Response - EMS Response to Scene

Caller Name (b)(6)

[08/24/2008 12:04:21 : pos1 : briana]

517 - HAVE PICTURES THERE ARE SUBJECTS HERE WANTING TO MOVE THE ATV/UTV TOLD THEM NOT TO UNTIL I HEARD FROM SOMEONE

4 - CAN THEY MOVE THE ATV OR DO YOU WANT TO SEE IT? NEG THEY CAN MOVE IT//517 HAS PHOTOS ALSO

[08/24/2008 11:41:16 : pos1 : briana]

250 - YOU WILL HAVE A STRAIGHT SHOT THROUGH THE SQUARE IT IS SHUT DOWN

[08/24/2008 11:35:40 : pos1 : briana]

C227 - NEED SECOND AMBULANCE PARTY WITH POSSIBLE BROKEN LEG

[08/24/2008 11:26:33 : pos2 : tonyaw]

3 yr injured in atv rollover.

IDI 080827HWE0001 - Exhibit "C"

INCIDENT REPORT
NARRATIVE

AGENCY NAME	ORI #	REPORT DATE	CASE NUMBER
Grant County Sheriffs Department	WI0220000	8/24/2008 11:26:02 AM	08-02428

atv accident

UTV ACCIDENT

INITIAL INFORMATION:
On 8-24-08 at about 1126AM I copied radio traffic dispatching the Lancaster rescue squad to 10933 CTH K in reference to a ATV rollover with injuries.
I was not dispatched or in the area I began to work toward the Lancaster area.
I copied radio traffic that DNR warden Marty Stone was on scene. I copied radio traffic that Lancaster Police officer John Murray was on scene.
I continued to monitor radio traffic as two rescue squads were called to the scene and transported patients to Grant Regional Hospital.
At one point Warden Stone asked for a deputy to respond. I met with him at the hospital.
Warden Stone advised me that the accident involved a utility vehicle and would not fall under the DNR's jurisdiction. I was advised by Warden Stone that a 4 year old boy had been thrown from the vehicle as it rolled over and was pinned by the roll bar. I was informed that the father was driving and had suffered a broken leg and was also being transported to the hospital
I determined that there were no other people involved that could provide additional information at this time and did not make contact with the individuals involved.
Officer Murray contacted the Sheriff dept. and advised that he had photographed the scene and that other family members were there and wanted to remove the UTV. I advised him to allow them to remove it.
I later received copies of the photos that he took.
I spoke with Officer Murray about the accident and was advised that [redacted] was operating the UTV and that his son [redacted] was a passenger. [redacted] was descending a hill and turned to the right. The vehicle overturned and [redacted] was ejected.

I later learned that [redacted] was med-flighted to Madison where he passed away. [redacted] was also transported to Madison for treatment of his broken leg.

End of report.
Sgt. Edward K. Breitsprecker Jr.

IDI 080827HWE0001 - Exhibit "C"

INCIDENT REPORT
ADDITIONAL VICTIMS

AGENCY	ORI #	REPORT DATE	CASE NUMBER
Grant County Sheriffs Department	WI0220000	8/24/2008 11:26:02 AM	08-02428

VICTIM NUMBER: 1 **VICTIM NAME:** (b)(3):CPSA Section 25(c),(b)(6) **HOME PHONE:** **CONNECTED TO OFFENSES:** 1 2 3 4 5 6 7 8 9 10

ADDRESS: (Street, City, State, Zip) (b)(3):CPSA Section 25(c),(b)(6) **DOB:** (b)(3):CPSA Section 25(c)

TYPE OF VICTIM	RACE	SEX	RESIDENT STATUS	ETHNICITY	AGE
	WHITE	MALE			31

LEO ACTIVITY: **OTHER JUR:**

AGGRAVATED ASSAULT CIRCUMSTANCES: 1 2

JUSTIFIABLE HOMICIDE CIRCUMSTANCE:

INJURY TYPE: ☐ BROKEN BONES ☐ POSS INT INJURIES ☐ SEVERE LACERATION ☐ UNCONSCIOUSNESS ☐ NONE ☐ MINOR INJURY ☐ MAJOR INJURY ☐ LOSS OF TEETH

RELATIONSHIP OF VICTIM TO OFFENDER 1 - 10: 1 2 3 4 5 6 7 8 9 10

VICTIM NUMBER: **VICTIM NAME:** **HOME PHONE:** **CONNECTED TO OFFENSES:** 1 2 3 4 5 6 7 8 9 10

ADDRESS: (Street, City, State, Zip) **DOB:**

TYPE OF VICTIM	RACE	SEX	RESIDENT STATUS	ETHNICITY	AGE

LEO ACTIVITY: **OTHER JUR:**

AGGRAVATED ASSAULT CIRCUMSTANCES: 1 2

JUSTIFIABLE HOMICIDE CIRCUMSTANCE:

INJURY TYPE: ☐ BROKEN BONES ☐ POSS INT INJURIES ☐ SEVERE LACERATION ☐ UNCONSCIOUSNESS ☐ NONE ☐ MINOR INJURY ☐ MAJOR INJURY ☐ LOSS OF TEETH

RELATIONSHIP OF VICTIM TO OFFENDER 1 - 10: 1 2 3 4 5 6 7 8 9 10

VICTIM NUMBER: **VICTIM NAME:** **HOME PHONE:** **CONNECTED TO OFFENSES:** 1 2 3 4 5 6 7 8 9 10

ADDRESS: (Street, City, State, Zip) **DOB:**

TYPE OF VICTIM	RACE	SEX	RESIDENT STATUS	ETHNICITY	AGE

LEO ACTIVITY: **OTHER JUR:**

AGGRAVATED ASSAULT CIRCUMSTANCES: 1 2

JUSTIFIABLE HOMICIDE CIRCUMSTANCE:

INJURY TYPE: ☐ BROKEN BONES ☐ POSS INT INJURIES ☐ SEVERE LACERATION ☐ UNCONSCIOUSNESS ☐ NONE ☐ MINOR INJURY ☐ MAJOR INJURY ☐ LOSS OF TEETH

RELATIONSHIP OF VICTIM TO OFFENDER 1 - 10: 1 2 3 4 5 6 7 8 9 10

FROM:GRANT COUNTY SHERIFF 608 723 2377 10:14/14:52/2008/48 P15/5

IDI 080827HWE0001 - Exhibit "C"

INCIDENT REPORT

AGENCY	ORI #	REPORT DATE	CASE NUMBER
Grant County Sheriffs Department	WI0220000	8/24/2009 11:26:02 AM	08-02428

PROPERTY

TYPE PROPERTY LOSS/ETC	DESCRIPTION CODE	QTY	DESCRIPTION	JUR RECOVERED	VALUE	DATE RECOVERED

DRUGS

QTY	MEASURE	SUSPECTED TYPE

VEHICLES

STATUS	YEAR	MAKE	MODEL	STYLE	COLOR	LICNS	VIN
		YAMAH	RHINO	EQUIPMENT	GREEN		

FROM:GRANT COUNTY SHERIFF 608 723 8377

IDI 080827HWE0001 - Exhibit "D" - Drawing by father of UTV path (-) taken around incident property. (*) notes location of tip over.

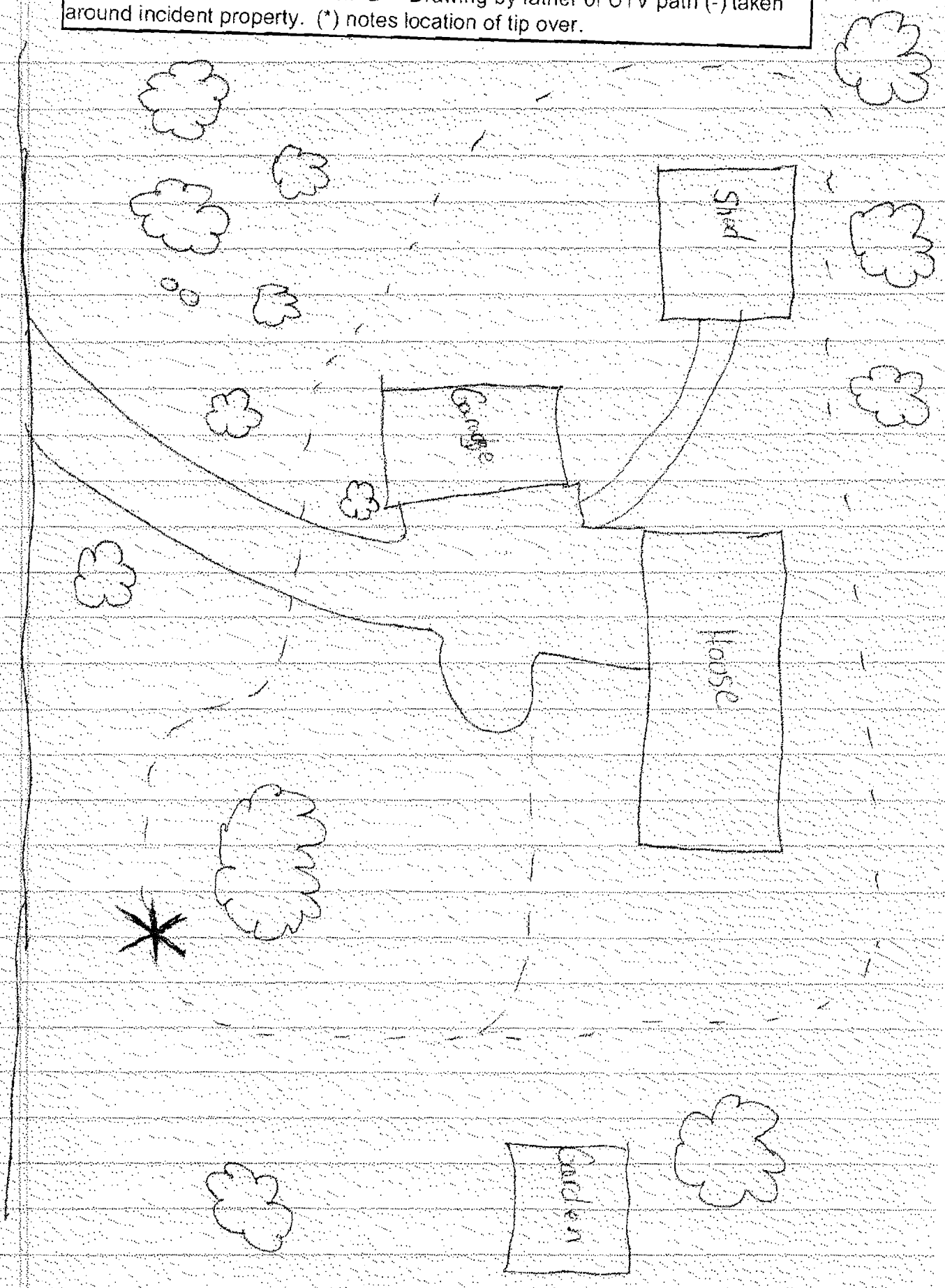

IDI 080827HWE0001 - Exhibit "E" - Coroner's report - Three pages

Grant County Coroner's Case History Docket

State of Wisconsin *County of Grant*

Case Number: 121-2008 Date: August 24, 2008

Name: (b)(3):CPSA Section 25(c),(b)(6) DOB: (b)(3):CPSA Section 25 (c),(b)(6)

Address:

Social Security Number:

Notification date: August 24, 2008 Time: 1440 By: Grant Co Sheriff's Dept

Pronounced date: August 24, 2008 Time: 1422 By: (b)(6)

Cause of death: Internal Injuries

Natural: Suicide: Undetermined: Blood Draw: No Blood draw time: N/A

Accident: X Homicide: Autopsy: No

Medications: See attached History

Death Location: University of Wisconsin Hospital

Weapon: serial number: Suicide note: No

Number of chemo treatments: N/A Number of radiation treatments: N/A

Dates of chemo treatment's From: To: Dates of radiation treatments From: To:

Did tobacco use contribute to death
Yes: No: X Probably: Unknown:

Not Pregnant within the past year Not pregnant, but pregnant with 43 days to 1 year prior to death

Pregnant at the time of death Unknown if pregnant within last year

Not pregnant, but pregnant with 42 days of death

Funeral Home: Schwartz Removed by: (b)(6)

Identified by: (b)(6) Physician: (b)(6)

Investigated by: *Grant County Coroner Ronald Sturmer*

Case History Narrative

See attached history

IDI 080827HWE0001 - Exhibit "E"

Grant County Coroners Office Case History Report

Case Number
121-2008

Notification:

On August 24, 2008 at 1440 I was called by a Grant County Sheriff's Department dispatcher reference calling [redacted] advised me that [redacted] a three year old had been brought to the University of Wisconsin Hospital following a utility terrain vehicle accident. He said that [redacted] had pronounced [redacted] at 1422.

At 1455 I was called by a Grant County Sheriff's Department dispatcher and asked to call Dane County Deputy Coroner Jeffrey Sholts at 576-9115. When [redacted] was pronounced the Dane County Coroner's Office was called and he was calling me to pass along the information. Jeffrey also asked me to call [redacted] the Nursing Supervisor at the UW Hospital at (608) 576-6372. She also told me about the death of [redacted] and said that he had bruises on his chest, abdominal distention and a closed head injury.

Case Report:

After I got the report of the death of [redacted] I went to Grant Regional Health Center. I got copies of the reports from the Lancaster Rescue Squad and the hospital emergency room records. I also talked with [redacted] who had treated [redacted] in the emergency room.

I was told that [redacted] was a passenger on utility terrain vehicle being operated by his father, the vehicle rolled over pinning [redacted]

At 1600 [redacted] from the UW Hospital called and I released the body.

On August 28th I sent a fax to the University of Wisconsin Hospital Medical Records requesting the report made on the death of [redacted] I was faxed two pages of dictation from [redacted]

I received pictures of the vehicle taken by Officer John Murray of the Lancaster Police Department who had gone to the scene to help with traffic.

On August 25th I went to the Schwartz Funeral Home. [redacted] identified the body of a male as that of [redacted] I viewed the body and took photographs for identification.

End of report

Ronald Sturmer

Grant County Coroner Ronald Sturmer
Grant County Coroners Office

IDI 080827HWE0001 - Exhibit "E"

GRANT COUNTY CORONER's OFFICE
224 East Cherry Lancaster, Wisconsin 53813
Phone: 608-723-2157 Fax: 608-723-4204

September 3, 2008

On September 3, 2008 at 0900 I talked with [redacted] reference the accident involving their son [redacted] birthday of [redacted]

On August 24, 2008 [redacted] was giving his son [redacted] and his daughter [redacted] birthday of [redacted] a ride on their Yamaha Rhino utility terrain vehicle. [redacted] was sitting in the passenger seat wearing a seat belt, Andrew was sitting on the console area between the seats. [redacted] was not wearing his seat belt and there is no seatbelt for the area where [redacted] was sitting. [redacted] drove off of the cement area by the garage and across the yard then towards the highway. They were on a slight side hill as [redacted] started to make a right hand turn he touched the brakes. He felt the vehicle start to tip and put out his left leg, [redacted] slid across [redacted] lap out of the vehicle onto the ground. [redacted] was holding the vehicle up until his leg broke the vehicle then rolled onto the driver's side pinning [redacted] under the roll bar [redacted] crawled out of the seat belt and ran to the house to get [redacted] her mother, [redacted] and [redacted] managed to get [redacted] out from under the roll bar.

[redacted] and [redacted] said giving the children a ride in the Rhino is a daily event and sometimes more than once a day. They have a path that goes through the yard about to the highway and back up around behind the house. He is careful when giving the children rides and does not speed and was not speeding the day of the accident. The Yamaha Rhino weighs 1050 pounds and has heavy duty tires on it with a deep tread that can leave tracks in the yard.

I took several pictures of the Yamaha Rhino showing the seating area and the tires.

End of Report

Ronald Sturmer
Grant County Coroner

IDI 080827HWE0001 – Exhibit "F" – Contact List

Contact List

Sgt. Ed Breiestrecker
(b)(6)
Grant County Sheriff's Department
1000 N. Adams Street
Lancaster, WI 53813
(608) 723-2157

Chief Dan Jacobson – No report
Lancaster Police Department
222 S. Madison
Lancaster, WI 53813
(608) 723-4188

Ronald Sturmer - Coroner
Grand County Coroner
224 Cherry Street
Lancaster, WI 53813
(608) 723-2157 (Dispatch)

(b)(3):CPSA Section 25(c),(b)(6)

Victims

(b)(3):CPSA Section 25(c),(b)(6)