Federal Register

Friday,
July 23, 2010

Part III

Consumer Product Safety Commission

16 CFR Parts 1219, 1220, and 1500

Safety Standards for Full-Size Baby Cribs and Non-Full-Size Baby Cribs; Notice of Proposed Rulemaking; Proposed Rule

CONSUMER PRODUCT SAFETY COMMISSION

16 CFR Parts 1219, 1220, and 1500

[CPSC Docket No. CPSC–2010–0075]

Safety Standards for Full-Size Baby Cribs and Non-Full-Size Baby Cribs; Notice of Proposed Rulemaking

AGENCY: Consumer Product Safety Commission.

ACTION: Notice of proposed rulemaking.

SUMMARY: Section 104(b) of the Consumer Product Safety Improvement Act of 2008 ("CPSIA") requires the United States Consumer Product Safety Commission ("CPSC," "Commission" or "we") to promulgate consumer product safety standards for durable infant or toddler products. These standards are to be "substantially the same as" applicable voluntary standards or more stringent than the voluntary standard if the Commission concludes that more stringent requirements would further reduce the risk of injury associated with the product. The Commission is proposing safety standards for full-size and non-full-size baby cribs in response to the direction under section 104(b) of the CPSIA.[1] Section 104(c) specifies that the crib standards will cover used as well as new cribs. The crib standards will apply to anyone who manufactures, distributes or contracts to sell a crib; to child care facilities, and others holding themselves out to be knowledgeable about cribs; to anyone who leases, sublets or otherwise places a crib in the stream of commerce; and to owners and operators of places of public accommodation affecting commerce.

DATES: Written comments must be received by October 6, 2010.

ADDRESSES: Comments related to the Paperwork Reduction Act aspects of the recordkeeping, marking and instructional literature requirements of the proposed rule should be directed to the Office of Information and Regulatory Affairs, OMB, Attn: CPSC Desk Officer, FAX: 202–395–6974, or e-mailed to *oira_submission@omb.eop.gov.*

Other comments, identified by Docket No. CPSC–2010–0075, may be submitted by any of the following methods:

Electronic Submissions

Submit electronic comments in the following way:

Federal eRulemaking Portal: http://www.regulations.gov. Follow the instructions for submitting comments.

To ensure timely processing of comments, the Commission is no longer accepting comments submitted by electronic mail (e-mail) except through *www.regulations.gov.*

Written Submissions

Submit written submissions in the following way:

Mail/Hand delivery/Courier (for paper, disk, or CD–ROM submissions), preferably in five copies, to: Office of the Secretary, Consumer Product Safety Commission, Room 502, 4330 East West Highway, Bethesda, MD 20814; telephone (301) 504–7923.

Instructions: All submissions received must include the agency name and docket number for this rulemaking. All comments received may be posted without change, including any personal identifiers, contact information, or other personal information provided, to *http://www.regulations.gov.* Do not submit confidential business information, trade secret information, or other sensitive or protected information electronically. Such information should be submitted in writing.

Docket: For access to the docket to read background documents or comments received, go to *http://www.regulations.gov.*

FOR FURTHER INFORMATION CONTACT: Patricia Edwards, Project Manager, Directorate for Engineering Sciences, Consumer Product Safety Commission, 4330 East West Highway, Bethesda, MD 20814; telephone (301) 504–7577; *pedwards@cpsc.gov.*

SUPPLEMENTARY INFORMATION:

A. Background and Statutory Authority

1. Section 104(b) of the Consumer Product Safety Improvement Act

The Consumer Product Safety Improvement Act of 2008 ("CPSIA", Pub. L. 110–314) was enacted on August 14, 2008. Section 104(b) of the CPSIA requires the Commission to promulgate consumer product safety standards for durable infant or toddler products. These standards are to be "substantially the same as" applicable voluntary standards or more stringent than the voluntary standards if the Commission concludes that more stringent requirements would further reduce the risk of injury associated with the product. In this document, the Commission proposes safety standards for full-size and non-full-size cribs. The proposed standard for full-size cribs is substantially the same as a voluntary standard developed by ASTM International (formerly known as the American Society for Testing and Materials), ASTM F 1169–10 *Standard Consumer Safety Specification for Full-Size Baby Cribs,* but with one modification that strengthens the standard. The proposed standard for non-full-size cribs is substantially the same as ASTM F 406–10, *Standard Consumer Safety Specification for Non-Full-Size Baby Cribs,* but with several changes that strengthen the standard.

2. Section 104(c) of the CPSIA

The CPSIA treats cribs differently than other durable infant or toddler products covered by section 104 of the CPSIA. Section 104(c)(2) of the CPSIA states that the section applies to any person that:

> (A) manufactures, distributes in commerce, or contracts to sell cribs;
>
> (B) based on the person's occupation, holds itself out as having knowledge or skill peculiar to cribs, including child care facilities and family child care homes;
>
> (C) is in the business of contracting to sell or resell, lease, sublet, or otherwise place cribs in the stream of commerce; or
>
> (D) owns or operates a place of public accommodation affecting commerce (as defined in section 4 of the Federal Fire Prevention and Control Act of 1974 (15 U.S.C. 2203) applied without regard to the phrase "not owned by the Federal Government").

Section 104(c)(2) of the CPSIA (Pub. L. 110–314).

Section 104(c)(1) of the CPSIA makes it a prohibited act under section 19(a)(1) of the Consumer Product Safety Act ("CPSA") for any person to whom section 104(c) applies to "manufacture, sell, contract to sell or resell, lease, sublet, offer, provide for use, or otherwise place in the stream of commerce a crib that is not in compliance with a standard promulgated under subsection (b) [of the CPSIA]." Section 104(c)(3) of the CPSIA defines "crib" as including new and used cribs, full-size and non-full-size cribs, portable cribs, and crib pens.

Thus, the crib standards will apply to owners and operators of child care facilities (including in-home child care) and public accommodations such as hotels and motels, as well as to manufacturers, distributors, and retailers of cribs. Once the standards are in effect, it will be unlawful to sell, lease or otherwise provide a crib for use that does not meet the standards. As discussed in more detail in part I below, the Commission recognizes the potential

[1] The Commission voted 5–0 to approve publication of this proposed rule. Chairman Inez M. Tenenbaum, Commissioner Nancy A. Nord, and Commissioner Anne M. Northup filed statements concerning this action which may be viewed on the Commission's Web site at *http://www.cpsc.gov/pr/statements.html* or obtained from the Commission's Office of the Secretary.

market impact of this rule on some entities and invites comments on these issues.

3. Existing Mandatory Regulations for Cribs

In 1973, the Commission issued mandatory regulations for full-size cribs, 38 FR 32129 (Nov. 21, 1973), which are codified at 16 CFR part 1508. The standard was amended in 1982, adding a performance requirement to address the hazard of crib cutouts, 47 FR 47534 (Oct. 27, 1982). This standard has requirements addressing crib dimensions, the spacing of crib components, hardware, construction and finishing, assembly instructions, warning statements and marking, recordkeeping, and cutouts. In 1976, the Commission issued similar regulations for non-full-size cribs, 41 FR 6240 (Feb. 12, 1976), codified at 16 CFR part 1509 (also amended in 1982 to address cutouts). According to 16 CFR parts 1508 and 1509, what principally distinguishes full-size from non-full-size cribs are the interior dimensions of the crib. Also, according to these standards, a full-size crib is intended for use in the home, and a non-full-size crib is intended for use "in or around the home, for travel and other purposes." A full-size crib has interior dimensions of 28 ± ⅝ inches (71 ± 1.6 centimeters) in width by 52 ⅜ ± ⅝ inches (133 ± 1.6 centimeters) in length. A non-full-size crib may be either smaller or larger than these dimensions. Full-size and non-full-size cribs also differ in the height of the crib side or rail. Non-full-size cribs include oversized, specialty, undersized and portable cribs. However, any product with mesh/net/screen siding, non-rigidly constructed cribs, cradles, car beds, baby baskets, and bassinets are excluded from the non-full-size crib requirements of 16 CFR part 1509.

The requirements of 16 CFR part 1508 have been included in ASTM F 1169–10, and the requirements of 16 CFR part 1509 have been included in ASTM F 406–10. However, the recordkeeping requirements in the ASTM standards are expanded from the 3-year retention period that is required in 16 CFR parts 1508 and 1509 to a 6-year retention period, which is consistent with the consumer registration provision in section 104(d) of the CPSIA. Also, as explained in part G.2 of this preamble, ASTM F 406–10 (for non-full-size cribs) places the recordkeeping provision in a non-mandatory appendix. The proposed rule would put the recordkeeping provision in the general requirements section of the non-full-size crib standard.

Elsewhere in this issue of the **Federal Register**, the Commission is proposing to revoke the existing CPSC regulations for full-size and non-full-size cribs, 16 CFR parts 1508 and 1509. As explained in the proposed revocation notice, the applicable ASTM standards include the requirements of 16 CFR parts 1508 and 1509. Thus, maintaining them would be redundant. Revoking the existing regulations will allow all the crib-related requirements to be together and will avoid confusion about which requirements apply to cribs.

Related to the proposed revocation of 16 CFR parts 1508 and 1509, the Commission is proposing to revise 16 CFR 1500.18(a)(13) and (14). These provisions currently state that full-size cribs that do not comply with 16 CFR part 1508 and non-full-size cribs that do not comply with 16 CFR part 1509 are banned hazardous substances under the Federal Hazardous Substances Act ("FHSA"). This notice proposes to change the references in 16 CFR 1500.18(a)(13) and (14) to refer to the crib standards the Commission is proposing.

4. Previous Commission Activities Concerning Cribs

In addition to issuing 16 CFR parts 1508 and 1509, the Commission has taken other regulatory and non-regulatory actions concerning crib hazards. In 1996, the Commission published an advance notice of proposed rulemaking ("ANPR") under the FHSA to address the hazard of crib slat disengagement, 61 FR 65996 (Dec. 16, 1996) ("1996 ANPR"). The Commission had become aware of 138 incidents, including 12 deaths due to entrapment, associated with disengagement of crib slats that were reported to the Commission between January 1985 and September 1996. After issuance of the 1996 ANPR, the CPSC staff worked with ASTM to add a provision to ASTM F 1169 to address this hazard. Elsewhere in this issue of the **Federal Register**, the Commission is terminating the rulemaking it began with the 1996 ANPR because the slat disengagement hazard is addressed by the standards the Commission is proposing.

More recently, the Commission's Office of Compliance staff has been involved with numerous investigations and recalls of cribs. Since 2007, CPSC has issued 40 recalls of over 11 million cribs. All but 7 of these recalls were for product defects that created a substantial product hazard, and not for violations of the federal crib regulations.

On November 25, 2008, the Commission published an ANPR discussing options to address the hazards which CPSC staff had identified in the reported crib incidents and recalls. The ANPR focused on drop side crib hardware, other hardware, assembly issues, and wood quality. Comments in response to the ANPR suggested that CPSC should look more broadly at crib safety issues to develop a comprehensive crib rule and seek to harmonize its regulations with international standards. Another comment expressed concern about the potential costs for small businesses that may sell only several hundred cribs per year. Several consumer groups supported mandating the ASTM crib standards and additionally strengthening crib regulations by such actions as banning drop sides, requiring test methods mandated by other standards, and strengthening requirements for crib hardware. The hazards discussed in the 2008 ANPR are addressed in this proposal.

On April 22, 2009, CPSC staff held a public roundtable meeting concerning crib safety to solicit input about existing voluntary and mandatory standards to help the staff in developing crib standards under section 104 of the CPSIA. Information about the crib roundtable and the presentations made by CPSC staff and others are on the Commission's Web site at *http://www.cpsc.gov/info/cribs/infantsleep.html.* Over 100 people attended the roundtable, including representatives from crib manufacturers, testing laboratories, consumer groups, other government agencies, and other interested stakeholders.

B. The Products

1. Definitions

According to existing CPSC standards and the ASTM standards, a crib is a bed designed to provide sleeping accommodations for an infant. As discussed previously, full-size cribs have specific interior dimensions (28 ± ⅝ inches (71 ± 1.6 centimeters) in width by 52⅜ ± ⅝ inches (133 ± 1.6 centimeters) in length). Non-full-size cribs are either smaller or larger than full-size cribs. The category of non-full-size cribs includes oversized, specialty, undersized and portable cribs, but does not include any product with mesh/net/screen siding, non-rigidly constructed cribs, cradles, car beds, baby baskets, or bassinets.

2. The Market for Full-Size Cribs

The CPSC staff estimates that there are currently 68 manufacturers or importers supplying full-size cribs to the United States market. Ten of these

firms are domestic importers (15 percent), 42 are domestic manufacturers (62 percent), 7 are foreign manufacturers (10 percent), and 2 are foreign importers (3 percent). Insufficient information was available about the remaining firms to categorize them.

Based on information from a 2005 survey conducted by the American Baby Group, CPSC staff estimates annual sales of new cribs to be about 2.4 million, of which approximately 2.1 million are full-size cribs (could be an underestimate if new mothers buy more than one crib). CPSC staff estimates that there are currently approximately 591 models of full-size cribs compared to approximately 81 models of non-full-size cribs. Thus, approximately 88 percent of crib models are full-size cribs.

3. The Market for Non-Full-Size Cribs

CPSC staff estimates that there are currently at least 17 manufacturers or importers supplying non-full-size cribs to the United States market. Five of these firms are domestic importers and ten are domestic manufacturers. Insufficient information is available to determine whether the remaining firms are manufacturers or importers. CPSC staff estimates that there are approximately 2.4 million cribs sold to households annually. Of these, approximately 293,000 are non-full-size cribs.

4. Retailers, Child Care Facilities and Places of Public Accommodation

Section 104(c) of the CPSIA explicitly provides that the crib standards issued under this section will apply to retailers (of both new and used cribs), child care facilities, and owners and operators of places of public accommodation affecting commerce. The CPSIA defines a "place of public accommodation affecting commerce" with reference to the Federal Fire Prevention and Control Act of 1974 (but without the phrase that excludes establishments owned by the Federal Government). Thus, the definition under the CPSIA is:

> any inn, hotel, or other establishment * * * that provides lodging to transient guests, except that such term does not include an establishment treated as an apartment building for purposes of any State or local law or regulation or an establishment located within a building that contains not more than 5 rooms for rent or hire and that is actually occupied as a residence by the proprietor of such establishment.

15 U.S.C. 2203(7).

CPSC staff is unable to estimate the number of retailers that may sell or provide cribs. However, the number would be some subset of approximately 24, 985 retail firms in the United States (at least 5, 292 of which sell used products). The CPSC staff estimates that there are approximately 59, 555 firms supplying day care services and 43,303 firms providing public accommodation.

C. Incident Data

In November 2007, CPSC staff began a pilot project known as the Early Warning System ("EWS") to monitor incident reports related to cribs. Between November 1, 2007 and April 11, 2010, the Commission has reports through EWS of 3,584 incidents related to cribs. The year of the incident associated with these reports ranged from 1986 through 2010. However, very few crib-related incidents that occurred before 2007 are reflected in EWS. Data from EWS is not meant to provide an estimate of all crib-related incidents that have occurred during any particular time period. Rather, because a substantial number of EWS incident reports were assigned for follow-up investigation, the EWS incidents provide a better illustration of the hazard patterns associated with incidents involving cribs than other CPSC databases could.

Of the 3,584 incidents reported through EWS, CPSC staff has clearly identified 2,395 incidents as involving full-size cribs, 64 incidents as clearly involving non-full-size cribs, and 1,125 incidents as lacking sufficient data for CPSC staff to determine whether they involved full-size or non-full-size cribs. The prevalent hazards reported in these incidents are common to all cribs, regardless of size. Given the predominance of incident reports identified as involving full-size cribs, the 1,125 incidents in which size of the crib could not be determined are grouped with the category of full-size cribs.

1. Full-Size Cribs (Includes Cribs of Undetermined Size)

This section discusses incident data in the 3,520 reports from EWS involving 2,395 full-size cribs and 1,125 reports involving cribs of an undetermined size. Of these 3,520 incident reports, there were 147 fatalities, 1,675 non-fatal injuries, and 1,698 non-injury incidents. The non-injury incidents range from incidents that could have potentially resulted in injuries or fatalities to general complaints or comments from consumers. Reporting is ongoing; the number of reported fatalities, non-fatal injuries, and non-injury incidents will change in the future.

a. Fatalities

Between November 1, 2007 and April 11, 2010, a total of 147 fatalities associated with full-size cribs were reported to the Commission. A majority of the deaths (107 out of 147, or almost 73 percent) were not related to any structural failure or design flaw of the crib, but fell into the following categories:

- 62 suffocation deaths related to presence of soft bedding;
- 17 asphyxiation deaths related to prone positioning of infant;
- 12 strangulation deaths related to window blind/electrical/other cords in or near crib; and
- 16 remaining deaths resulted from miscellaneous hazards, *e.g.,* plastic bags in crib and use of nursery product accessories in crib

There were 35 fatalities attributable to structural problems of the crib. Nearly all (34 of the 35) were due to head/neck/body entrapments. Over half of these (18 out of 35) were related to drop-side failures. Almost all of the crib failures—whether they occurred due to detachments, disengagements, or breakages—created openings in which the infant became entrapped. One entrapment death resulted from a child becoming trapped between a wall and a crib while trying to climb out of the crib; there was a crib assembly problem that prevented the mattress support from being lowered sufficiently. The non-entrapment death resulted from a loose screw becoming lodged in the decedent's throat. (For five fatalities, no information on the circumstances was available.)

b. Non-Fatal Injuries

Of the 3,520 incident reports involving full-size (and undetermined size) cribs, 1,675 reported a crib-related injury. The vast majority (97 percent) of these injuries were not serious enough to require hospitalization. Approximately half of those that did require hospitalization involved limb or skull fractures and other head injuries resulting from falls from cribs. Most of the remaining injuries resulted from children getting their limbs caught between crib slats, falling inside the crib and hitting the crib structure, or getting stuck in gaps created by structural failures.

c. Hazard Pattern Identification

CPSC staff considered all 3,520 incidents (including fatalities, non-fatalities, and non-injury incidents) involving full-size cribs (including cribs of undetermined size) to identify hazard patterns related to these incidents. CPSC

staff grouped these incidents into four broad categories: (1) Product-related; (2) non-product related; (3) recall-related; and (4) miscellaneous. More detail is provided in the Epidemiology staff's memorandum that is part of the CPSC staff's briefing package available on the CPSC Web site at *http://www.cpsc.gov.*

Product-related. About 82 percent of the 3,520 incidents reported some sort of failure or defect in the product itself. Beginning with the most frequently reported concerns these included:

- Falls from cribs accounted for approximately 23 percent (about 800 reports) of the 3,520 incidents. This category accounts for the largest proportion of injuries, but no fatalities.
- Crib drop-side-related problems, which include drop-side detachment, operation, hardware, and assembly issues, among others, accounted for about 22 percent (approximately 770 reports) of the incidents. This category accounts for 12 percent of all reported fatalities.
- Infants getting their limbs caught between the crib slats accounted for 12 percent (about 430 reports) of the incidents in the EWS. No fatalities were reported in this category.
- Wood-related issues were reported in about 12 percent (approximately 410 reports) of all incidents in the EWS. This includes fractured slats, slat detachments, and fractured rails, among others. One fatality was reported in this category.
- Mattress support-related problems were reported in about 5 percent (approximately 170 reports) of the incidents. Four fatalities were reported in this category.
- Mattress fit problems were reported in about 3 percent (about 100 reports) of the incidents in the EWS. These problems can cause partial or full body entrapments in the space between mattress and crib side. Numerous bruising injuries but no fatalities were reported in this category.
- Paint-related issues were reported/complained of in about 2 percent (approximately 90 reports) of the EWS reports. These mostly expressed concern about a possible choking hazard or lead exposure from children chewing on paint chips.
- Miscellaneous problems with the crib structure were reported in 3 percent (120 reports) of the EWS incidents. These included non-drop-side or drop gate failures, sharp catch-points, stability and/or other structural issues and included 12 fatalities.

Non-product-related. Approximately 10 percent (about 340 reports) of the 3,520 incident reports were of deaths, injuries, or non-injury incidents that could not be associated with any product defect or failure. As previously noted, most fatalities in full-size cribs were associated with the use of soft/extra bedding in the crib, prone positioning of the infant on the sleep surface, and the presence of hazardous surroundings in and around the crib.

Recall-related. About 5 percent (approximately 180 reports) of the 3,520 reports were related to recalled cribs. Most of the reports were complaints or inquiries from consumers regarding a recalled product.

Miscellaneous. The remaining 3 percent (about 100 reports) of the incidents reported a variety of miscellaneous problems including bug-infested cribs, odor/fumes emanating from cribs, unexplained fatalities/injuries to infants in cribs, and ambiguous descriptions of problems. There were five fatalities included in this category.

2. Non-Full-Size Cribs

This category includes portable cribs and other cribs that are either smaller or larger than the dimensions specified for full-size cribs. For its review of incident data, staff included in the category of non-full-size cribs only those cribs it could positively identify as non-full-size cribs. CPSC staff is aware of 64 incidents related to non-full-size cribs that have been reported between November 1, 2007 and April 11, 2010. Among these incidents, there were 6 fatalities, 28 injuries, and 30 non-injury incidents. Because reporting is ongoing, the number of reported fatalities, non-fatal injuries, and non-injury incidents presented here may change in the future.

a. Fatalities

Of the six fatalities, three were attributed to the presence of a cushion/pillow in the sleep area. One fatality was due to the prone positioning of the infant on the sleep surface. One fatality resulted from the infant getting entrapped in a gap opened up by loose/missing screws. Very little information was available on the circumstances of the last fatality.

b. Non-Fatal Injuries

Among the 28 non-fatal injuries reported, only 2 required any hospitalization. Most of the remaining injuries, which include fractures, bruises, and lacerations, resulted from children falling and hitting the crib structure while in the crib, falling or climbing out of the crib, and children getting their limbs caught in the crib slats.

c. Hazard Pattern Identification

CPSC staff considered all 64 incidents (including fatalities, non-fatalities, and non-injury incidents) involving non-full-size cribs to identify hazard patterns related to these incidents. The hazard patterns are similar to those among full-size cribs.

Product-related. Seventy-two percent of the incidents reported product-related issues. These primarily involved falls from cribs, limbs becoming caught between slats, issues related to drop-sides and non-drop-sides (such as detachments and operation/hardware issues), and wood-related issues (including three slat detachments). This category includes one fatality which was related to non-drop-side hardware.

Non-product-related. Nineteen percent of the incidents reported non-product-related issues. These included four of the six fatalities—three on pillows/cushions and one from prone positioning—and eight injuries resulting from the infant hitting and getting hurt on the crib structure while in the crib.

Recall-related. Three percent of the reports were related to recalled products.

Miscellaneous. The remaining 6 percent of incidents included reports of such miscellaneous issues as a bug-infested crib, an ambiguous description of an incident requiring hospitalization of the infant, and a fatality with very little information on the circumstances involved.

D. Voluntary and International Standards

As part of its work in developing standards for full-size and non-full-size cribs under section 104 of the CPSIA, CPSC staff reviewed requirements of existing voluntary and international standards related to cribs. The primary such standards currently in effect are the ASTM standards for full-size and non-full-size cribs, a Canadian standard and a European standard. Underwriters Laboratories, Inc. ("UL") has a crib standard, UL 2275. However, the UL standard was not followed by crib manufacturers and is no longer an active standard.

1. The ASTM Standards

ASTM first published its voluntary standard for full-size cribs, ASTM F 1169, *Standard Specification for Full-Size Baby Crib,* in 1988. At that time, provisions included requirements for crib side testing, vertical impact testing, a mattress support system test, a test method for crib side latches, a plastic teething test and requirements for labeling and instructional literature.

ASTM F 1169 was revised in 1999 in response to the Commission's 1996 ANPR to address the integrity of slat-to-rail joints. The revision added a torque test for side spindles and increased the applied weight and number of cycles for cyclic testing. ASTM F 1169 was revised again in 2003 to include requirements addressing corner post entanglements and to make editorial changes. The 2007 revision made further editorial changes. In 2009, the standard was revised significantly to include a limitation on movable sides that effectively eliminates the traditional drop side design in which the front side of the crib can be raised and lowered. The 2009 revision also added a new performance requirement for slat strength. On June 1, 2010, ASTM approved the current version of its full-size crib standard with a slight change to the name, ASTM F 1169–10, *Standard Consumer Safety Specification for Full-Size Baby Cribs,* which is discussed in section E of this preamble.

In 1997, ASTM first published a standard for non-full-size cribs, ASTM F 1822, *Standard Consumer Safety Specification for Non-Full-Size Baby Cribs.* ASTM F 1822 covered products that provide sleeping accommodations for a child and have interior dimensions between 17″ and 26″ side and between 35″ and 50⅜″ long (excluding bassinets, cradles, and baskets). In June 2002, in order to group products with similar uses, ASTM combined its non-full-size crib standard, ASTM F 1822–97, with its play yard standard (F 406–99, *Standard Consumer Safety Specification for Play Yards)* to create ASTM F 406–02, *Standard Consumer Safety Specification for Non-Full-Size Baby Cribs/Play Yards.* ASTM revised ASTM F 406 several times subsequently. On June 1, 2010, ASTM approved the current version of its non-full-size crib standard, F 406–10, which is discussed in section E of this preamble.

2. International Standards

Health Canada's crib standard, SOR/86–969, and the European standard, EN 716, have several performance requirements that have essentially been included in ASTM F 1169–10. These include the cyclic side (shake) test and the mattress support system vertical impact test (with slight modification) from the Canadian standard. The slat/spindle strength test in ASTM F 1169–10 evolved from the EN 716 requirements. However, the ASTM F 1169–10 test is more stringent than the slat/spindle test in the EN standard. The Commission recognizes the efficiencies to be gained from harmonization with international standards but given staff's conclusions that its proposed tests will reduce the likelihood of injury and death, adopts for this notice the more stringent tests described above. The Commission recognizes the potential market impact of this rule on some entities that sell in the global marketplace and invites comments on the proposed tests as well.

E. The ASTM 2010 Crib Standards

As noted in the previous section of this preamble, both ASTM F 1169 and ASTM F 406 have been significantly revised in 2009 and 2010. The Commission is adopting the 2010 version of these standards with certain modifications discussed in section G of this preamble. Drawing from its experience with investigations and recalls related to cribs, from knowledge gained through the crib roundtable and ANPR comments, and from participation in ASTM meetings, CPSC staff developed a list of areas the staff believes should be considered in revised standards for full-size and non-full-size cribs. These areas of consideration are:

- Drop-side hardware systems
- Non-drop-side hardware systems
- Mattress support issues
- Wood screws
- Assembly and instruction issues
- General requirements
- Slat integrity/wood quality
- Paint/finish
- Attachments
- Slat spacing
- Climb/fall out
- Mattress fit

Most of these areas are now addressed in ASTM F 1169–10 and ASTM F 406–10. To the extent that there are structural/design issues not adequately addressed by the ASTM standards, the Commission is proposing modifications to address these. This is primarily the case with the non-full-size crib standard that lacks some of the more stringent requirements found in the full-size crib standard. (These proposed modifications are discussed in section G of this preamble.)

Some hazards that CPSC staff identified—such as climbing/falling out of cribs, mattress fit, and limb entrapments—are difficult to address through crib standards. The Commission intends to address these hazards through other means.

Climb/fall out. With regard to the climb/fall out hazard, product changes, such as increasing the height of the crib sides, could create other hazards or lead to use of sleeping arrangements other than cribs (which could be more hazardous). A principal factor in these incidents is the continued use of cribs with children who are capable of climbing out of the crib. The full-size crib standard moved the warning about when to stop using a crib into a higher position in the list of warnings (this warning was already in a prominent position in the non-full-size crib standard).

Mattress fit. With regard to the fit of the crib mattress, CPSC staff's review of available data found no deaths or serious injuries related to this issue. (The fit of the mattress is only an issue with full-size cribs because non-full-size cribs come with a mattress that is required to fit with no gaps larger than ½ inch.) However, a significant gap between the mattress and the crib structure could potentially create an entrapment hazard. The Commission believes this issue would best be addressed through a separate ASTM standard for full-size crib mattresses. ASTM has begun work on such a standard, and CPSC staff is participating in this development.

Limb entrapment. With regard to limb entrapments between slats, no deaths have been associated with this hazard, but some fractures and bruising have been reported. The existing spacing requirement—maximum width of 2⅜ inches (6 cm)—specified in 16 CFR 1508 and 1509 (and maintained in ASTM F 1169–10 and ASTM F 406–10) has been extremely effective in preventing incidents of fatal head/neck entrapment and strangulation. Increasing the spacing requirement to address the limb injuries could increase such fatalities, and decreasing the requirement could result in other limb entrapments of smaller infants or smaller body parts.

1. ASTM F 1169–10 Standard for Full-Size Baby Cribs

ASTM F 1169–10 includes definitions; general requirements; performance requirements; specific test methods; and requirements for marking, labeling, and instructional literature.

Definitions. The definition of full-size crib is the same as the current definition in 16 CFR part 1508. Among the other terms defined are "accessory," "key structural element," "mattress support system," and "movable side."

General requirements. Several general requirements, such as specifications for interior crib dimensions and rail height, spacing of crib components, restrictions on toe holds, prohibition on hardware or fasteners that present mechanical hazards; restrictions on wood screws; and requirements for recordkeeping come from the provisions of 16 CFR part 1508. Other general requirements include, but are not limited to: Paint

and surface coatings must comply with the lead paint restrictions in 16 CFR part 1303; small parts (as defined in 16 CFR part 1501) are prohibited; corner post assemblies must not extend beyond 0.06 inches (1.50 mm) above the upper edge of an end or side panel; movable sides are limited so that traditional drop sides are essentially eliminated, but designs that use a hinged joint that folds down are allowed; and in addition to the restrictions on wood screws that were already in 16 CFR part 1508, wood screws and other fasteners must meet additional requirements.

Performance requirements. ASTM F 1169–10 contains numerous performance requirements and specifies applicable test methods. These include: A requirement for spindle slat strength testing; mattress support system tests (impact and static load testing and openings requirements); crib side tests (includes crib side static and impact tests and a crib side spindle/slat torque test); a plastic teething rail test; crib side latch tests; dynamic structural cyclic (shake) tests (includes horizontal and vertical cyclic testing to simulate shaking); a component separation limitation (post testing); cutout testing; accessories entrapment testing; as well as providing a specified order for these tests.

Marking, labeling and instructional literature. ASTM F 1169–10 includes the marking, labeling and instructional requirements that are currently in 16 CFR part 1508 as well as requirements for warnings concerning suffocation on soft bedding, strangulation on strings or cords, and the hazard of falls from the crib. The ASTM standard also requires that instructions that are easy to read and understand be provided with the crib and that the instructions contain certain information and warnings.

2. ASTM F 406–10 Standard for Non-Full-Size Baby Cribs

Like the ASTM standard for full-size cribs, ASTM F 406–10 includes definitions; general requirements; performance requirements; specific test methods; and requirements for marking, labeling, and instructional literature.

Definitions. The definition of "non-full-size crib" is the same as that in 16 CFR part 1509. Although ASTM 406–10 includes play yards within its scope, and the standard provides a definition of play yard, the Commission is not including play yards in its proposed non-full-size crib standard. (ASTM F 406–10 defines a "play yard" as "a framed enclosure that includes a floor and has mesh or fabric sided panels primarily intended to provide a play or sleeping environment for children. It may fold for storage or travel.") The Commission will be developing a separate standard for play yards in the near future.

General requirements. For the ASTM non-full-size crib standard, general requirements include: Restrictions on corner post assemblies (must not extend beyond 0.06 inches (1.50 mm) above the upper edge of an end or side panel); requirements that cribs meet CPSC provisions concerning sharp points and edges, small parts, lead paint, and flammable solids; restrictions concerning scissoring, shearing and pinching; toy accessory requirements; requirements for latching and locking mechanisms; and restrictions on openings. The standard also contains requirements concerning protective components, labeling, stability, cord/strap length, coil springs, entrapment in accessories, and for mattresses which must be provided with non-full-size cribs.

Performance and test method requirements. The non-full-size crib standard provides performance requirements, including a requirement for crib side height (including a limitation on crib side configurations that essentially bans traditional drop sides); hardware requirements (including requirements for fasteners and wood screws); construction and finishing requirements; spindle/slat strength testing; mattress support system testing (including vertical impact and static load testing); crib side tests (includes static and impact tests); a plastic teething rail test; foldable side or end latch tests; and dynamic structural cyclic (shake) tests (includes horizontal and vertical cyclic testing to simulate shaking).

Marking, labeling and instructions. ASTM F 406–10 has requirements for marking, labeling and instructions that are similar to the requirements for full-size cribs. However, the standard contains additional provisions for warning statements addressing hazards posed by cribs that are likely to be moved around often.

F. Assessment of Voluntary Standards ASTM F 1169–10 and ASTM F 406–10

1. Section 104(b) of the CPSIA: Consultation and CPSC Staff Review

Section 104(b) of the CPSIA requires the Commission to assess the effectiveness of the voluntary standard in consultation with representatives of consumer groups, juvenile product manufacturers, and other experts. This consultation process for the full-size and non-full-size crib standards has involved an ANPR, a public crib roundtable, and in-depth involvement with ASTM. CPSC staff's consultations with ASTM are ongoing.

2. Full-Size Crib Standard; ASTM F 1169–10

The Commission believes that the provisions of ASTM F 1169–10 are effective to reduce the risk of injury associated with full-size cribs. The Commission is proposing one modification, discussed in section G.1 of this preamble, to strengthen the ASTM standard. This section summarizes how the provisions of ASTM F 1169–10 address the principal crib-related hazards CPC staff has identified.

Moveable side (drop-side) requirements. A review of the incident data indicates that 18 of 35 fatalities attributable to structural failures of cribs were related to drop-side failures. The fatalities occurred when gaps were created when the corner of the drop side dislocated or disengaged from the crib end. ASTM F 1169–10 addresses this type of hazard through a requirement that the sides of a crib be fixed in place and have no movable sections less than 20 inches from the top of the mattress support (effectively eliminating drop sides).

Structural integrity requirements (including non-drop-side hardware). CPSC staff attributed 12 of the 35 fatalities to problems with non-drop-side hardware and poor structural integrity. Many of these incidents occurred when screws or inserts loosened over time causing primary crib elements, such as crib side rails and ends, to separate and create an entrapment hazard. ASTM F 1169–10 addresses this type of hazard through requirements for screw fasteners, locking components, and the cyclic side (shake) test.

Screw fastener and locking feature requirements. Loosening of wood screw and other fasteners has also led to crib incidents. ASTM F 1169–10 includes the wood screw requirements of 16 CFR 1508 and also: Restricts the use of wood screws as primary fasteners; prohibits use of wood screws in structural elements that a consumer would need to assemble; and adds stricter requirements for the use of threaded metal inserts and other metal threaded fasteners.

Alternating horizontal and vertical cyclic side (shake) test. Among the incidents reported through EWS, were problems with the structural integrity of cribs, and hardware issues. The cyclic side (shake) test—which simulates a child's lifetime shaking of the crib—should address the types of incidents

related to loosened joints, detached sides and overall poor structural integrity. The test applies a cyclic force (9,000 vertical and then 9,000 horizontal load cycles using 27 lbf) at the midpoint of each top rail, end and side of the crib.

Mattress support vertical impact test. Among the EWS incidents were 3 deaths due to entrapments between a mattress support and a crib structure and 168 reported non-fatal incidents related to mattress support structural failures. ASTM F 1169–10 includes a mattress impact cyclic test developed by Health Canada. This test consists of dropping a 45-pound mass (20 kg) repeatedly every 4 seconds onto a polyurethane foam test mattress covered in vinyl and supported by the mattress support system.

Crib side vertical impact test. Although a provision was added to the ASTM F 1169 standard in 1999 to require testing of crib side spindles and slats, some incidents involving crib slat disengagement (which can result in entrapment) have continued to occur. ASTM F 1169–10 strengthens that testing requirement by specifying that any crib side with slats must be tested (previously the number of sides was not specified and manufacturers could test just one side).

Slat/spindle strength test. CPSC staff identified 1 death and 219 non-fatal incidents that were related to fractures of the crib slats or rails. Broken or dislocated slats can cause a gap of approximately 5 inches that can result in entrapment. The 2009 version of the ASTM standard required testing slat strength at 56.2 pounds. Based on testing and evaluations by the Commission's Engineering staff, ASTM F 1169–10 makes this test more stringent by requiring a set number of slats to withstand an 80-pound load.

Mis-assembly issues. ASTM F 1169–10 includes a requirement that states: "Crib designs shall only allow assembly of key structural elements in the manufacturer's recommended use position or have markings that indicate their proper orientation. The markings must be conspicuous in the misassembled state." This new requirement will address incidents where mis-assembly has been found to be a contributing factor.

Order of testing. ASTM F 1169–10 specifies the order in which all performance tests must be conducted:

1. Teething rail test
2. Cyclic side (shake) test
3. Crib side latch test
4. Mattress support system vertical impact test
5. Mattress support system static test
6. Crib side vertical impact test
7. Slat/spindle strength test

This order requires that the least stringent test be performed first, and for the testing order to continue in increasing stringency. This order also means that testing begins with a disassembled crib for the teething rail test, and the crib is assembled for the tests up to the slat/spindle strength test which is conducted on disassembled side rails.

CPSC staff believes that the combination of the cyclic side test (simulating a child standing and shaking the top of a side rail), mattress support system vertical impact test (child jumping), side rail impact test (child climbing outside of rail), and the slat/spindle strength tests (child and/or sibling falling against or kicking slats) together comprise a laboratory simulation of a lifetime of use. Each test represents a specific aspect of one life cycle. CPSC staff believes that the new requirements in ASTM F 1169–10 are a significant improvement to the previous standards and should result in more robust cribs.

3. Non-Full-Size Crib Standard; ASTM F 406–10

The Commission believes that the provisions of ASTM F 406–10, with the modifications it proposes, are effective to reduce the risk of injury associated with non-full-size cribs. The Commission is proposing four modifications and two editorial changes, discussed in section G.2 of this preamble, to strengthen the ASTM standard. This section summarizes how the provisions of ASTM F 406–10 address the principal crib-related hazards CPSC staff has identified.

Wood screws and other fasteners. The loosening of wood screws and other fasteners has been involved in crib incidents leading to structural problems and entrapment. ASTM F 406–10 addresses this hazard through requirements that are identical to those in ASTM F 1169–10.

Alternating horizontal and vertical cyclic side test (shake test). ASTM F 406–10 contains the same cyclic for crib sides test that simulates a child's shaking the crib as is provided in ASTM F 1169–10.

Spindle/slat testing. The spindle/slat performance test in ASTM F 406–10 is identical to the one in ASTM F 1169–10.

Mis-assembly issues. This provision concerning mis-assembly is identical to the one in ASTM F 1169–10.

Movable side (drop-side) requirements. Similar to the ASTM standard for full-size cribs, ASTM F 406–10 contains requirements that restrict moveable sides, and have the effect of eliminating traditional drop sides.

G. Description of Proposed Changes to ASTM Standards

CPSC staff has evaluated ASTM F 1169–10 and ASTM F 406–10 to determine the adequacy of these standards and any modification that might be needed to strengthen them. Based on this assessment and consultations with others, the Commission proposes a consumer product safety standard for full-size cribs that incorporates by reference ASTM F 1169–10 with one modification described in this section and proposes a consumer product safety standard for non-full-size cribs that incorporates by reference ASTM F 406–10 with the four modifications and two editorial changes described in this section.

To best understand the proposed standards it is helpful to view the current ASTM standards for full-size cribs and non-full-size cribs at the same time as the Commission's proposed modifications. The ASTM crib standards are available for viewing for this purpose during the comment period through this link: *http://www.astm.org/cpsc.htm.*

1. Proposed Change to the Full-Size Crib Standard (ASTM F 1169–10)

The Commission is proposing one modification to ASTM F 1169–10. ASTM F 1169–10 allows retightening of screws between the crib side latch test and mattress support vertical impact tests. Industry representatives have argued that this allowance is needed because they believe the cyclic side "shake" test will loosen fasteners, which may cause a crib to fail some performance requirements in subsequent tests. ASTM F 1169–10 defines failure as key components separating by 0.04 inch (1.0 mm), typically 1–1½ turns of a fastener.

CPSC staff believes that the combination of performance tests in ASTM F 1169–10 comprise a laboratory simulation of a lifetime of use, and only as a combined whole, functioning together, is this simulation accomplished. Retightening fasteners would sever the chain of accumulated conditioning effects. CPSC staff does not believe that performing the sequence of tests without retightening fasteners is an overly restrictive test. The Canadian standard does not allow for any retightening of fasteners while a crib is tested. According to representatives from Health Canada, this has not been a problem for the vast majority of cribs

tested to the Canadian standard. The CPSC staff is aware of at least ten fatal incidents in which loose screws have contributed to the death of a child. Loosened hardware can lead to gaps in which the child can become entrapped. Thus, it is important for fasteners to remain secure during the useful life of the crib.

2. Proposed Changes to the Non-Full-Size Crib Standard (ASTM F 406–10)

The Commission is proposing four modifications and two editorial changes to ASTM F 406–10. These changes are necessary to adequately address the risk of injury posed by non-full-size cribs. The proposed changes will make the non-full-size crib standard more consistent with the standard for full-size cribs.

Mattress support system cyclic impact test. The Commission proposes to replace the mattress support performance requirement in ASTM F 406–10 with the test requirement developed by Health Canada that is in the full-size crib standard, ASTM F 1169–10. At its May 12, 2010 meeting, the ASTM subcommittee for the F 406 standard reviewed this mattress support impact test for inclusion in ASTM F 406–10 and is expected to vote on it at the next subcommittee meeting. This change is needed to address mattress support hardware and related structural integrity hazards.

Crib side tests. The side impact test in ASTM F 406–10 is less stringent than the side impact test included in the standard for full-size cribs, ASTM F 1169–10 which was revised in 1999 after the Commission's 1996 ANPR concerning crib slat disengagements. However, the same revision was never made to the non-full-size crib standard. The Commission proposes to change the side impact test in the non-full-size crib standard to make it identical to the requirements in ASTM F 1169–10. This includes increasing the weight and number of cycles for the impact testing, and adding the spindle/slat torque test which involves twisting each slat after the side rail impact test to determine whether the side rail impact test has weakened the spindle/slat-to-rail joints which could create an entrapment hazard. The full-size crib standard includes this test, and the Commission proposes adding the same test to the non-full-size crib standard.

Movable side latch tests. These tests had been part of all the previous versions of ASTM F 406 and were called the "Vertical Drop-Side Latch Tests." They were removed during the development of F 406–10 in connection with the new limitation on movable sides. However, movable sides using other methods than a traditional drop-side are still permitted. Thus, the Commission believes the tests are still necessary. The Commission proposes to restore the requirement and rename it "movable side latch tests."

Order of structural tests. ASTM F 406–10 does not specify the order in which tests must be performed for non-full-size cribs. As discussed in section F.2 above, however, ASTM F 1169–10 does specify the test order for full-size cribs. The Commission proposes to specify the same testing order for non-full-size cribs.

Editorial change to limit standard to non-full-size cribs. ASTM F 406–10 covers play yards as well as non-full-size cribs and thus includes specific requirements for mesh/fabric sided products. In the future, the Commission will establish a separate standard for play yards under the process established by section 104 of the CPSIA. The Commission proposes changes to clarify that its standard covers only non-full-size cribs, removing provisions that apply only to mesh/fabric sided products.

Editorial change to place recordkeeping provision in general requirements. ASTM F 406–10 contains a recordkeeping provision that is nearly identical to that in 16 CFR part 1509 (the ASTM provision requires record retention for 6 years, whereas 16 CFR part 1509 requires that records be maintained for 3 years). This recordkeeping provision is in the non-mandatory appendix of ASTM F 406–10. The Commission's proposal places this requirement in the general requirements section (which is the location of the recordkeeping provision in ASTM F 1169–10 for full-size cribs).

H. Effective Date

The Administrative Procedure Act ("APA") generally requires that the effective date of a rule be at least 30 days after publication of the final rule. *Id.* 553(d). To allow time for cribs to come into compliance, the Commission proposes that the standard would become effective 6 months after publication of a final rule. This is consistent with other standards the Commission has proposed under section 104 of the CPSIA. The Commission invites comments regarding the sufficiency of a six-month effective date for the crib standards.

I. Regulatory Flexibility Act

The Regulatory Flexibility Act ("RFA") generally requires that agencies review proposed rules for their potential economic impact on small entities, including small businesses. 5 U.S.C. 603

1. Full-Size Cribs

a. The Market for Full-Size Cribs

As mentioned above, CPSC staff is currently aware of 68 manufacturers or importers supplying full-size cribs to the United States ("U.S.") market (of those that could be categorized, 10 are domestic importers, 42 are domestic manufacturers, 7 are foreign manufacturers, and 2 are foreign importers).

The Juvenile Products Manufacturers Association ("JPMA"), the major U.S. trade association that represents juvenile product manufacturers and importers, runs a voluntary certification program for several juvenile products. Approximately 30 firms (44 percent) supply full-size cribs to the U.S. market that have been certified by JPMA as complying with the ASTM voluntary standard. Additionally, 15 firms claim compliance, although their products have not been certified by JPMA. It is assumed throughout this summary that the 45 firms that are certified or claim to be compliant with earlier ASTM standards will remain compliant with the 2010 version of the ASTM F 1169–10.

According to a 2005 survey conducted by the American Baby Group (*2006 Baby Products Tracking Study*), 90 percent of new mothers own cribs. Approximately 36 percent of wood cribs and 50 percent of metal cribs were handed down or purchased second-hand. Using an average weighted by the ownership of each type of crib (83 percent for wood and 7 percent for metal), CPSC staff estimates that approximately 37 percent of all cribs were handed down or purchased second-hand. Thus about 63 percent of cribs were acquired new. This suggests annual sales of about 2.4 million cribs to households ($.63 \times .9 \times 4.3$ million births per year). To the extent that new mothers own more than one crib, annual sales may be underestimated. Based on a review of the United States market, it appears that there are approximately 591 full-size crib models and 81 non-full-size crib models currently being supplied. Therefore, approximately 88 percent of the crib models on the U.S. market are full-sized. Applying this percentage to the number of cribs sold annually, yields an estimate of 2.1 million full-size cribs sold annually. However, this is a rough estimate, since the percentage of full-size crib models on the market does not necessarily correlate directly to sales.

As noted, section 104 of the CPSIA explicitly mentions retailers of both new and used full-size cribs (child care facilities and places of public accommodation are discussed in the section of this analysis concerning non-full-size cribs). The number of firms that may be selling or providing full-size cribs is unknown, but may be drawn from approximately 24,985 retail firms (at least 5,292 of which sell used products), that may be supplying new or used full-size cribs to the public. The number of affected retailers will be smaller since not all retailers sell full-size cribs.

The Commission is particularly interested in whether this analysis can be enhanced with additional data submitted through the comment period. Accordingly, we ask for comments on the market for full-sized cribs, the amount of existing inventory and the time it will take to manufacture sufficient compliant inventory to meet current market demand and additional demand created by the need to replace non-compliant cribs in hotels, day care centers and other places where cribs are provided for use.

b. Compliance Requirements of the Proposal for Full-Size Cribs

The proposed standard for full-size cribs is nearly identical to ASTM F 1169–10 with the one modification of not allowing screws to be retightened between the crib side latch test and the mattress support vertical test. Based on testing results from Health Canada for the shake test, it appears that only the most poorly constructed cribs will fail when their screws are not retightened during testing. Initial follow-up testing by CPSC staff found that allowing retightening over the entire series of tests could result in this very dangerous hazard going undetected during testing. The incidence of failure during testing when screws are not retightened may be lower under ASTM F 1169–10, due to new requirements that will require that crib hardware include a locking device or other method to impede loosening. Based on this information, it appears that few, if any, firms will need to use better screw mechanisms or redesign their products to comply with the modification.

c. Impact of the Proposal Concerning Full-Size Cribs on Small Business

Under Small Business Administration ("SBA") guidelines, a manufacturer of full-size cribs is small if it has 500 or fewer employees, and an importer is considered small if it has 100 or fewer employees. Based on these guidelines, of the 68 firms currently known to be producing or selling full-size cribs in the United States, 48 are small (36 domestic manufacturers, 10 domestic importers, and 2 firms with unknown sources of supply). There are also probably additional unknown small manufacturers and importers operating in the U.S. market.

According to the SBA, retailers are considered small if they have $7 million or less in annual receipts. Approximately 93 percent of retailers have receipts of less than $5 million, with an additional 3 percent having receipts between $5 million and $9.99 million. Excluding firms with receipts between $5 million and $7 million yields an estimate of 23,236 small retail firms that may potentially be affected by the proposed standard. However, only a small percentage of these small firms actually sell full-size cribs. Thus, the number of small retail firms affected will be much smaller than 23,236.

i. Impact on Small Manufacturers

The impact of the proposed standard on small manufacturers will differ based on whether they currently comply with ASTM F 1169–10. Of the 36 small domestic manufacturers, 24 produce cribs that are certified by JPMA or claim to be in compliance with the voluntary standard. The impact on the 24 compliant firms is not expected to be significant. It seems unlikely that any of these products will require modification to meet the proposed standard. Should any be necessary, it would most likely take the form of a few minor changes (such as more effective screws or screw combinations).

The proposed standard could have a significant impact on one or more of the 12 firms that are not compliant with the ASTM F 1169–10, as their products might require substantial modifications. The costs associated with these modifications could include product design, development and marketing staff time, and product testing. There may also be increased production costs, particularly if additional materials are required. The actual cost of such an effort is unknown, but could be significant, especially for the two firms that rely primarily or entirely on the production and sale of full-size cribs and related products, such as accompanying furniture and bedding, and a third firm that produces only one other product. However, the impact of these costs may be mitigated if they are treated as new product expenses that can be amortized over time.

This analysis assumes that only those firms that produce cribs certified by JPMA or that claim ASTM compliance will pass the voluntary standard's requirements. This is not necessarily the case. CPSC staff has identified many cases where products not certified by JPMA actually comply with the relevant ASTM standard. To the extent that this is true, the impact of the proposed standard will be less significant than described.

ii. Small Importers of Full-Size Cribs

While four of the ten small importers do not comply with the ASTM standard, all would need to find an alternate source of full-size cribs if their existing supplier does not come into compliance with the new requirement of the proposed standard. The cost to importers may increase and they may, in turn, pass some of those increased costs on to consumers. Some importers may respond to the rule by discontinuing the import of their non-complying cribs. However, the impact of such a decision may be mitigated by replacing the non-compliant crib with a complying product or another juvenile product. Deciding to import an alternative product would be a reasonable and realistic way to offset any lost revenue given that most import a variety of products.

iii. Small Retailers of Full-Size Cribs

The CPSIA requires that all full-size cribs sold by retailers comply with the full-size crib rule by the effective date of the final standard. This means that retailers, most of whom are small, will need to verify that any full-size cribs in their inventory and any that they purchase in the future comply with the regulation prior to offering them for sale. CPSC staff believes that most retailers, particularly small retailers, do not keep large inventories of cribs. With an effective date six months after publication of the final rule, retailers of new products should have sufficient time and notification to make this adjustment with little difficulty. The situation for retailers of used cribs is more complicated, however, because they may not always be able to determine whether the full-size cribs they receive are compliant. For the affected retailers, it may be simpler to discontinue the sale of used full-size cribs. However, if cribs represent a small proportion of the products they sell, the impact on these firms may be limited.

iv. Alternatives

Under section 104 of the CPSIA, the primary alternative that would reduce the impact on small entities is to make the voluntary standard mandatory with no modifications. Adopting the current voluntary standard without any changes

could potentially reduce costs for 12 of the 36 small manufacturers and 4 of the 10 small importers who are not already compliant with the voluntary standard. However, these firms will still require substantial product changes in order to meet the voluntary standard. Since the Commission's change adds little to the overall burden of the proposed rule, adopting the voluntary standard with no changes will not significantly offset the burden that is expected for these firms. Additionally, adopting the voluntary standard with no modifications would be unlikely to significantly reduce the impact on small retailers. The primary effect for these retailers (which in most cases should be small) stems from replacing existing inventory with complying product. The proposed changes to the voluntary standard should not significantly affect such replacement costs.

2. Non-Full-Size Cribs

a. The Market for Non-Full-Size Cribs

CPSC staff estimates that there are currently at least 17 manufacturers or importers supplying non-full-size cribs to the United States market (5 are domestic importers, 10 are domestic manufacturers, and insufficient information is available to determine whether the remaining firms are manufacturers or importers). As mentioned above, CPSC staff estimates that there are approximately 2.4 million cribs sold to households annually. Of these, approximately 293,000 are non-full-size cribs.

Five firms that supply non-full-size cribs to the U.S. market provide cribs that have been certified by JPMA as complying with the ASTM voluntary standard. Additionally, two firms claim compliance although their products have not been certified by JPMA. Therefore, including the firms that claim compliance with the ASTM standard, five manufacturers, one importer, and one of the firms with an unknown source of supply, have products that are ASTM compliant. It is assumed throughout this summary that firms that are certified or claim to be compliant with earlier versions of the ASTM standard will remain compliant with ASTM F 406–10.

As explained in the analysis concerning full-size cribs (section I.1.a of this preamble), CPSC staff estimates annual sales of all cribs to households to be about 2.4 million cribs. CPSC staff estimates that there are approximately 81 non-full-size crib models currently being supplied (versus 591 full-size crib models). Therefore, approximately 12 percent of the crib models on the U.S. market are non-full-sized. Applying this to the number of cribs sold annually, yields a rough estimate of 293,000 non-full-size cribs sold annually.

In addition to manufacturers and importers of new non-full-size cribs, section 104 of the CPSIA explicitly applies to retailers of both new and used non-full-size cribs, as well as child care facilities and places of public accommodation, such as hotels that supply non-full-size cribs for use by their patrons. The number of firms that may be selling or providing new or used non-full-size cribs to the public is unknown, but would be drawn from approximately 24,985 retail firms (at least 5,292 of which sell used products), 59,555 firms supplying day care services, and 43,303 firms providing public accommodation.

b. Compliance Requirements of the Proposal for Non-Full-Size Cribs

The proposed standard for non-full-size cribs would adopt the requirements of ASTM F 406–10 with certain modifications. The proposed standard would add the following requirements: (1) Mattress support system cyclic impact test (as in ASTM F 1169–10); (2) side impact test (as in ASTM F 1169–10); (3) movable side latch tests (as in previous versions of ASTM F 406); and (4) a specific order for the structural tests (as in ASTM F 1169–10). The proposed standard would apply only to non-full-size cribs, and not to play yards.

To address known hazards associated with mattress support hardware and structural integrity, CPSC staff recommends modifying the mattress support performance requirement to match the one that is being included in the 2010 ASTM standard for full-size cribs. CPSC staff believes that many firms will need to modify their non-full-size cribs (both compliant and non-compliant) in order to meet this proposed requirement. For most, this would require a stronger mattress support system, perhaps using additional or thicker materials. The cost of this modification is unknown, but unlikely to represent a significant proportion of the end product price. Alternatively, it is possible that some firms may choose to redesign their product to meet this requirement.

The side impact test will harmonize the requirement in the non-full-size crib standard with that in the full-size crib standard. CPSC staff does not believe that many firms will need to modify their products to comply with this requirement. In fact, the incidence of failure may be lower under ASTM F 1169–10, due to new requirements that will require that crib hardware include a locking device or other method to impede loosening. Any changes that may be required would most likely entail better/stronger attachments of slats to the bottom rails (*e.g.,* more glue or added staples). Therefore, this requirement is not expected to impose a significant burden upon firms, given the relatively low cost of the required modifications. However, it is possible that some firms may choose to redesign their products to address this requirement.

Reinserting the movable side latch tests is considered important, given that it was unintentionally removed from ASTM F 406–10. However, it is unlikely that firms previously compliant with ASTM F 406 made modifications to their products in order to cease to comply with a superseded requirement. Therefore, CPSC staff assumes that any supplier of ASTM compliant non-full-size cribs will already meet this requirement. In fact, CPSC staff does not believe that there are currently any non-full-size cribs on the market that will require modifications to meet this standard. However, if a firm's non-full-size cribs do not comply, they would most likely require stronger, more effective latching mechanisms. These types of modifications tend to be inexpensive and do not require product redesign.

It is possible that specifying the order of testing could have an impact on the test results. To date, however, CPSC staff has not identified any products that fail testing due to test order. In fact, CPSC staff believes that once products meet the 2010 ASTM standard and the additional requirements of the proposed rule, that most suppliers will be able to comply without making any product modifications. Therefore, CPSC staff believes that the impact of this proposed modification will be small. Should modifications be required to comply, however, product redesign seems likely.

c. Impact of the Proposal Concerning Non-Full-Size Cribs on Small Business

There are approximately 17 firms currently known to be producing or importing non-full-size cribs in the United States. Under SBA guidelines, a manufacturer of non-full-size cribs is small if it has 500 or fewer employees and an importer is considered small if it has 100 or fewer employees. Based on these guidelines, 14 are small firms—consisting of 9 domestic manufacturers and 5 importers. The size of the remaining firms—two with unknown supply sources and one domestic manufacturer—could not be determined. There are also probably

additional unknown small manufacturers and importers operating in the U.S. market.

According to the SBA, retailers and services such as day care centers and public accommodations are considered small if they have $7 million or less in annual receipts. Approximately 93 percent of retailers have receipts of less than $5 million, with an additional 3 percent having receipts between $5 million and $9.99 million. Excluding firms with receipts between $5 million and $7 million yields an estimate of 23,236 small retail firms that may potentially be affected by the proposed standard. However, it is important to note that only a small percentage of these small firms actually sell non-full-size cribs. Thus, the number of small retail firms affected will be much smaller than 23,236. Among day care service and accommodation providers, approximately 98 percent have receipts of less than $5 million with an additional 0.9 percent having receipts between $5 million and $9.99 million. This suggests that there are roughly 58,364 small day care firms (of 59,555) and 42,437 small hotel firms (of 43,303) that could be affected.

i. Impact on Small Manufacturers

The impact of the proposed standard on small manufacturers will differ based on whether their non-full-size cribs are expected to comply with ASTM F 406–10. Of the nine small domestic manufacturers, five are in compliance with the voluntary standard. The impact on the five compliant firms is not expected to be significant. While it is possible that some manufacturers might opt to redesign their product(s) to meet the proposed requirements, it is more likely that they will make a few minor changes (such as different hardware or stronger materials for the mattress support system). None of the expected modifications are expected to impact manufacturers' costs significantly, or to significantly increase the price paid by consumers.

The proposed standard could have a significant impact on one or more of the four firms that are not complying with the ASTM standard, as their products might require substantial modifications. The costs associated with these modifications could include product design, development and marketing staff time, and product testing. There may also be increased production costs, particularly if additional materials are required. The actual cost of such an effort is unknown, but could be significant, especially for the one firm that relies on the production and sale of non-full-size cribs and related products, such as accompanying furniture and bedding. However, the impact of these costs may be mitigated if they are treated as new product expenses that can be amortized over time.

The analysis assumes that only those firms that provide cribs that are certified by JPMA or claim ASTM compliance will pass ASTM F 406–10's requirements. This is not necessarily the case. CPSC staff has identified many cases where products not certified by JPMA actually comply with the relevant ASTM standard. To the extent that this is true, the impact of the proposed standard will be less significant than described.

ii. Small Importers of Non-Full-Size Cribs

While four of the five small importers are not compliant with the ASTM standard, all would need to find an alternate source of non-full-size cribs if their existing supplier does not come into compliance with the new requirements of the proposed standard. The cost to importers may increase and they may, in turn, pass some of those increased costs on to consumers. Some importers may respond to the rule by discontinuing the import of their non-complying cribs. However, the impact of such a decision may be mitigated by replacing the non-compliant crib with a complying product or another juvenile product. Deciding to import an alternative product would be a reasonable and realistic way to offset any lost revenue given that most import a variety of products.

iii. Small Retailers, Day Care Centers, and Public Accommodations

The CPSIA requires that all non-full-size cribs sold or leased by retailers or provided by day care centers or public accommodations (*e.g.,* hotels) to their customers comply with the crib standards by the effective date of the final standard.

This means that retailers, most of whom are small, will need to verify that any non-full-size cribs in their inventory and any that they purchase in the future comply with the regulation prior to offering them for sale or lease. CPSC staff believes that most retailers, particularly small retailers, do not keep large inventories of cribs. With an effective date six months after publication of a final rule, retailers of new products should have sufficient time and notification to make this adjustment with little difficulty. The situation for retailers and other suppliers of used cribs, such as day care centers and smaller places of public accommodation, is more complicated, however, because they may not always be able to determine whether the non-full-size cribs they receive are compliant. For the affected parties, it may be simpler to discontinue the sale of used non-full-size cribs. However, if cribs represent a small proportion of the products they sell, the impact on these firms may be limited.

Day care centers will need to replace all of their cribs by the standard's effective date. Since a new ASTM standard (F 406–10) will be published before the final CPSC regulation is published, these firms might not upgrade their existing non-full-size cribs until they are assured that the cribs they purchase will comply with the forthcoming regulation. The impact could be significant on some small day care centers if they had to replace their cribs all at once. However, these are one-time costs that may be passed on to customers over time, which could mitigate, to some extent, the rule's potential burden. Additionally, some centers might opt to replace their non-full-size cribs with play yards, thereby spreading replacement costs over a longer period of time, which would reduce the impact.

Some hotels (or similar places of public accommodation) might keep a few non-full-size cribs available for use by customers. The number at any one establishment is likely to be low, especially given the likelihood of parents with young children traveling with their own sleep products, such as play yards or portable cribs. As with day care centers, this is a one-time cost for firms that can be passed on to customers over time. Firms, particularly smaller firms, might opt to mitigate the costs by ceasing to provide cribs to their customers, or purchasing fewer replacement cribs. Therefore, it is unlikely that there will be a significant impact on a substantial number of firms providing public accommodation.

iv. Alternatives

Under section 104 of the CPSIA, one alternative that would reduce the impact on small entities is to make the voluntary standard mandatory with no modifications. Adopting ASTM F 406–10 without any changes could potentially reduce costs for four of the nine small manufacturers and four of the five small importers who are not already compliant with the voluntary standard. However, these firms will still require substantial product changes in order to meet the voluntary standard. Since the proposed changes add little to the overall burden of the proposed standard, adopting the voluntary standard with no changes will not

significantly offset the burden that is expected for these firms. Additionally, adopting the voluntary standard with no modifications would be unlikely to significantly reduce the impact on small retailers, day care centers, suppliers of public accommodations. The primary effect on these entities (which in most cases should be small) stems from replacing existing inventory with complying cribs. The proposed changes to the voluntary standard should not significantly affect such replacement costs.

The impact on retailers and hotels (or other places of public accommodation) is not expected to be significant, but there could be a significant impact on some small day care firms. One way to reduce this impact would be to set a later effective date. This would allow these firms to spread the cost of non-full-size crib replacement over a longer period of time.

J. Environmental Considerations

The Commission's regulations provide a categorical exclusion for the Commission's rules from any requirement to prepare an environmental assessment or an environmental impact statement as they "have little or no potential for affecting the human environment." 16 CFR 1021.5(c)(2). This proposed rule falls within the categorical exclusion.

K. Paperwork Reduction Act

This proposed rule contains information collection requirements that are subject to public comment and review by the Office of Management and Budget ("OMB") under the Paperwork Reduction Act of 1995 (44 U.S.C. 3501–3520). We describe the provisions in this section of the document with an estimate of the annual reporting burden. Our estimate includes the time for reviewing instructions, searching existing data sources, gathering and maintaining the data needed, and completing and reviewing each collection of information.

We particularly invite comments on: (1) Whether the collection of information is necessary for the proper performance of the CPSC's functions, including whether the information will have practical utility; (2) the accuracy of the CPSC's estimate of the burden of the proposed collection of information, including the validity of the methodology and assumptions used; (3) ways to enhance the quality, utility, and clarity of the information to be collected; and (4) ways to minimize the burden of the collection of information on respondents, including through the use of automated collection techniques, when appropriate, and other forms of information technology.

Full-Size Cribs

Title: Safety Standard for Full-Size Cribs

Description: The proposed rule would require each full-size crib to comply with ASTM F 1169–10, "Standard Consumer Safety Specification for Full-Size Baby Cribs." The proposed standard prescribes performance, design, and labeling requirements for full-size cribs. It would require manufacturers and importers of those products to maintain sales records for a period of six years after the manufacture or importation of full-size cribs. Sections 8 and 9 of ASTM F 1169–10 also contain requirements for marking and instructional literature.

Description of Respondents: Persons who manufacture full-size cribs.

We estimate the burden of this collection of information as follows:

TABLE 1—ESTIMATED ANNUAL REPORTING BURDEN

16 CFR section	Number of respondents	Frequency of responses	Total annual responses	Hours per response	Total burden hours
1219	68	1	[2] 68 (23)	5 (4.5)	443.5

There [2] are no capital costs or operating and maintenance costs associated with this collection of information.

Our estimates are based on the following:

CPSC staff estimates that the recordkeeping required by the proposed standard would take 5 hours per firm for obtaining the information from existing sales and distribution data. The annualized cost for the burden collection of information is approximately $9,401. This estimated cost to respondents is based on 340 hours (68 firms × 5 hours each) multiplied by a cost of $ 27.65 per hour (Bureau of Labor Statistics, total compensation, all workers, goods-producing industries, sales and office, March 2010, Table 9).

The cost to the government (wages and benefits) for 34 hours staff time to review the information (½ hour per firm) is approximately $2,784. Assuming that the employee reviewing the records will be a GS–14 level employee, the average hourly wage rate for a mid-level GS–14 employee in the Washington, DC metropolitan area, effective as of January 2010, is $57.33. This represents 70 percent of total compensation (Bureau of Labor Statistics, March 2010, percentage wages and salaries for all civilian management, professional, and related employees, Table 1). Adding an additional 30 percent for benefits brings average hourly compensation for a mid-range GS–14 employee to $81.89. Thus, 34 hours multiplied against an hourly compensation figure of $81.89 results in an estimated cost to the government of $2,784.26, which we have rounded to $2,784.

Proposed § 1219.2(a) would require each full-size crib to comply with ASTM F 1169–10. Sections 8 and 9 of ASTM F 1169–10 contain requirements for marking and instructional literature that are disclosure requirements, thus falling within the definition of "collections of information" at 5 CFR 1320.3(c).

Section 8.1.2.1 of ASTM F 1169–10 requires that the name and the place of business (city and state) of the manufacturer, distributor, or seller be clearly and legibly marked on each product and its retail package. Section 8.1.2.2 of ASTM F 1169–10 requires that a code mark or other means that identifies the model number, stock number, catalog number, or item number be marked on each crib and its retail carton. In both cases, the information must be placed on both the product and the retail package. There are 68 known firms supplying full-size cribs to the United States market. Forty-five of the 68 firms are known to already produce labels that comply with these sections of the standard, so there would be no additional burden on these firms. The remaining 23 firms are assumed to already use labels on both their products and their packaging, but would need to make some modifications to their existing labels. The estimated time required to make these modifications is about 30 minutes per model. Each of these firms supplies an average of nine

[2] The numbers in parentheses represent additional burdens on some firms that will require label modifications.

different models of full-size cribs, therefore, the estimated burden hours associated with labels is 30 minutes x 23 firms x 9 models per firm = 6,210 minutes or 103.5 annual hours.

The Commission estimates that hourly compensation for the time required to create and update labels is $27.65 (Bureau of Labor Statistics, March 2010, all workers, goods-producing industries, sales and office, Table 9). Therefore, the estimated annual cost associated with the Commission recommended labeling requirements is approximately $2,862 ($27.65 per hour × 103.5 hours = $2,861.78, which we have rounded up to $ 2,862).

Section 9.1 of ASTM F 1169–10 requires instructions to be supplied with the product. Full-size cribs are products that generally require some installation and maintenance, and products sold without such information would not be able to successfully compete with products supplying this information. Under OMB's regulations (5 CFR 1320.3(b)(2)), the time, effort, and financial resources necessary to comply with a collection of information that would be incurred by persons in the "normal course of their activities" are excluded from a burden estimate where an agency demonstrates that the disclosure activities needed to comply are "usual and customary." Therefore, because the CPSC is unaware of full-size cribs that: (a) Generally require some installation, but (b) lack any instructions to the user about such installation, we tentatively estimate that there are no burden hours associated with the instruction requirement in section 9.1 of ASTM F 1169–10 because any burden associated with supplying instructions with a full-size crib would be "usual and customary" and not within the definition of "burden" under OMB's regulations.

Based on this analysis, the requirements of the Commission's proposed standard for full-size cribs would impose a burden to industry of 443.5 hours at a cost of $12,263 annually.

In compliance with the Paperwork Reduction Act of 1995 (44 U.S.C. 3507(d)), we have submitted the information collection requirements of this rule to OMB for review. Interested persons are requested to fax comments regarding information collection by August 23, 2010, to the Office of Information and Regulatory Affairs, OMB (*see* **ADDRESSES**).

Non-Full Size Cribs

Title: Safety Standard for Non-Full-Size Cribs

Description: The proposed rule would require each non-full-size crib to comply with ASTM F 406–10, "Standard Consumer Safety Specification for Non-Full-Size Baby Cribs/Play Yards." The proposed standard prescribes performance, design, and labeling requirements for non-full-size cribs. It would require manufacturers and importers of those products to maintain sales records for a period of six years after the manufacture or importation of non-full-size cribs. Sections 9 and 10 of ASTM F 406–10 also contain requirements for marking and instructional literature.

Description of Respondents: Persons who manufacture non-full-size cribs.

We estimate the burden of this collection of information as follows:

TABLE 2—ESTIMATED ANNUAL REPORTING BURDEN

16 CFR section	Number of respondents	Frequency of responses	Total annual responses	Hours per response	Total burden hours
1220	17	1	[3] 17 (10)	5 (4.5)	130

There are no capital costs or operating and maintenance costs associated with this collection of information.

Our estimates are based on the following:

CPSC staff estimates that the recordkeeping required by the proposed standard would take 5 hours per firm for obtaining the information from existing sales and distribution data. The annualized cost for the burden collection of information is approximately $2,350.25. This estimated cost to respondents is based on 85 hours (17 firms x 5 hours each) multiplied by a cost of $ 27.65 per hour (Bureau of Labor Statistics, total compensation, all workers, goods-producing industries, sales and office, March 2010, Table 9).

The cost to the government (wages and benefits) for 8.5 hours staff time to review the information (½ hour per firm) is approximately $696. Assuming that the employee reviewing the records will be a GS–14 level employee, the average hourly wage rate for a mid-level GS–14 employee in the Washington, DC metropolitan area, effective as of January 2010, is $57.33. This represents 70 percent of total compensation (Bureau of Labor Statistics, March 2010, percentage wages and salaries for all civilian management, professional, and related employees, Table 1). Adding an additional 30 percent for benefits brings average hourly compensation for a mid-range GS–14 employee to $81.89. Thus, 8.5 hours multiplied against an hourly compensation figure of $81.89 results in an estimated cost to the government of $696.07, which we have rounded to $696.

Proposed § 1220.2(a) would require each non-full-size crib to comply with ASTM F 406–10. Sections 9 and 10 of ASTM F 406–10 contain requirements for marking and instructional literature that are disclosure requirements, thus falling within the definition of "collections of information" at 5 CFR 1320.3(c).

Section 9.1.1.1 of ASTM F 406–10 requires that the name and either the place of business (city, state, and mailing address, including zip code) or telephone number, or both of the manufacturer, distributor, or seller be clearly and legibly marked on each product and its retail package. Section 9.1.1.2 of ASTM F 406–10 requires that a code mark or other means that identifies the date (month and year as a minimum) of manufacture be marked on each crib and its retail carton. In both cases, the information must be placed on both the product and the retail package. There are 17 known firms supplying non-full-size cribs to the United States market.

Seven of the 17 firms are known to already produce labels that comply with these sections of the standard, so there would be no additional burden on these firms. The remaining 10 firms are assumed to already use labels on both their products and their packaging, but would need to make some modifications to their existing labels. The estimated time required to make these modifications is 30 minutes per model. Each of these firms supplies an average of nine different models of full-size cribs; therefore, the estimated burden hours associated with labels is 30 minutes × 10 firms × 9 models per firm = 2,700 minutes or 45 annual hours.

[3] The numbers in parentheses represent additional burdens on some firms that will require label modifications.

The Commission estimates that hourly compensation for the time required to create and update labels is $27.65 (Bureau of Labor Statistics, March 2010, all workers, goods-producing industries, sales and office, Table 9). Therefore, the estimated annual cost associated with the Commission recommended labeling requirements is approximately $1,244 ($27.65 per hour × 45 hours = $1,244.25, which we have rounded to $1,244).

Section 10.1 of ASTM F 406–10 requires instructions to be supplied with the product. Non-full-size cribs are products that generally require some installation and maintenance, and products sold without such information would not be able to successfully compete with products supplying this information. Under OMB's regulations (5 CFR 1320.3(b)(2)), the time, effort, and financial resources necessary to comply with a collection of information that would be incurred by persons in the "normal course of their activities" are excluded from a burden estimate where an agency demonstrates that the disclosure activities needed to comply are "usual and customary." Therefore, because the CPSC is unaware of non-full-size cribs that: (a) generally require some installation, but (b) lack any instructions to the user about such installation, we tentatively estimate that there are no burden hours associated with the instruction requirement in section 10.1 of ASTM F 406–10 because any burden associated with supplying instructions with a non-full-size crib would be "usual and customary" and not within the definition of "burden" under OMB's regulations.

Based on this analysis, the requirements of the Commission's proposed standard for non-full-size cribs would impose a burden to industry of 130 hours at a cost of $3,594 annually.

In compliance with the Paperwork Reduction Act of 1995 (44 U.S.C. 3507(d)), we have submitted the information collection requirements of this rule to OMB for review. Interested persons are requested to fax comments regarding information collection by August 23, 2010, to the Office of Information and Regulatory Affairs, OMB (*see* **ADDRESSES**).

L. Preemption

Section 26(a) of the CPSA, 15 U.S.C. 2075(a), provides that where a "consumer product safety standard under [the CPSA]" is in effect and applies to a product, no State or political subdivision of a State may either establish or continue in effect a requirement dealing with the same risk of injury unless the State requirement is identical to the Federal standard. (Section 26(c) of the CPSA also provides that States or political subdivisions of States may apply to the Commission for an exemption from this preemption under certain circumstances.) Section 104(b) of the CPSIA refers to the rules to be issued under that section as "consumer product safety rules," thus implying that the preemptive effect of section 26(a) of the CPSA would apply. Therefore, a rule issued under section 104 of the CPSIA will invoke the preemptive effect of section 26(a) of the CPSA when it becomes effective.

M. Certification

Section 14(a) of the CPSA imposes the requirement that products subject to a consumer product safety rule under the CPSA, or to a similar rule, ban, standard, or regulation under any other act enforced by the Commission, must be certified as complying with all applicable CPSC requirements. 15 U.S.C. 2063(a). Such certification must be based on a test of each product or on a reasonable testing program or, for children's products, on tests on a sufficient number of samples by a third party conformity assessment body accredited by the Commission to test according to the applicable requirements. As discussed in section L of this preamble, section 104(b)(1)(B) of the CPSIA refers to standards issued under that section as "consumer product safety standards." By the same reasoning, such standards also would be subject to section 14 of the CPSA. Therefore, any such standard would be considered to be a consumer product safety rule to which products subject to the rule must be certified.

Because full-size cribs and non-full-size cribs are children's products, they must be tested by a third party conformity assessment body whose accreditation has been accepted by the Commission. In the future, the Commission will issue a notice of requirements to explain how laboratories can become accredited as third party conformity assessment bodies to test to the new safety standards. The Commission previously issued a notice of requirements for accreditation to test to the existing crib standards (16 CFR 1508 and 1509). 73 FR 62965. (Baby cribs also must comply with all other applicable CPSC requirements, such as the lead content requirements of section 101 of the CPSIA, the phthalate content requirements in section 108 of the CPSIA, the tracking label requirement in section 14(a)(5) of the CPSA, and the consumer registration form requirements in section 104 of the CPSIA.)

N. Request for Comments

This NPR begins a rulemaking proceeding under section 104(b) of the CPSIA to issue consumer product safety standards for full-size cribs and non-full-size cribs. All interested persons are invited to submit their comments to the Commission on any aspect of the proposed standards. Comments should be submitted in accordance with the instructions in the **ADDRESSES** section at the beginning of this notice. The Commission is particularly interested in receiving comments on the following issues:

- Whether a 6-month effective date allows sufficient time for firms to come into compliance with the crib standards;
- The size of retailer crib inventories, as well as typical rate of turn-over;
- The number of retailers selling cribs and the relative supply levels of full-size and non-full-size cribs at retail establishments;
- The extent to which some day care centers or places of public accommodation (*e.g.,* hotels) may provide full-size cribs rather than non-full-size cribs;
- The average number of cribs (full-size and/or non-full-size) in day care centers and hotels; and
- The extent to which day care centers and hotels provide play yards (soft side structures) rather than either full-size or non-full-size cribs.

List of Subjects

16 CFR Part 1219

Consumer protection, Incorporation by reference, Imports, Infants and children, Labeling, Law enforcement, and Toys.

16 CFR Part 1220

Consumer protection, Incorporation by reference, Imports, Infants and children, Labeling, Law enforcement, and Toys.

16 CFR Part 1500

Consumer protection, Hazardous substances, Imports, Infants and children, Labeling, Law enforcement, Reporting and recordkeeping, and Toys.

Therefore, the Commission proposes to amend Title 16 CFR chapter II as follows:

1. Add part 1219 to read as follows:

PART 1219—SAFETY STANDARD FOR FULL–SIZE BABY CRIBS

Sec.
1219.1 Scope and definitions.
1219.2 Requirements for full-size baby cribs.

Authority: The Consumer Product Safety Improvement Act of 2008, Pub. Law 110–314, section 104, 122 Stat. 3016 (August 14, 2008).

§ 1219.1 Scope and definitions.

(a) *Scope.* This part establishes a consumer product safety standard for new and used full-size baby cribs and applies to the manufacture, sale, contract for sale or resale, lease, sublet, offer, provision for use, or other placement in the stream of commerce on or after (date 6 months after date of publication of a final rule the **Federal Register**) of a new or used full-size baby crib.

(b) *Definitions.* (1) *Full-size baby crib* means a bed that is:

(i) Designed to provide sleeping accommodations for an infant;

(ii) Intended for use in the home, in a child care facility, or place of public accommodation affecting commerce; and

(iii) Within a range of ± 5.1 cm (± 2 in.) of the following interior dimensions: The interior dimensions shall be 71 ± 1.6 cm (28 ± ⅝ in.) wide as measured between the innermost surfaces of the crib sides and 133 ± 1.6 cm (52 ⅜ ± ⅝ in.) long as measured between the innermost surfaces of the crib end panels, slats, rods, or spindles. Both measurements are to be made at the level of the mattress support spring in each of its adjustable positions and no more than 5 cm (2 in.) from the crib corner posts or from the first spindle to the corresponding point of the first spindle at the other end of the crib. If a crib has contoured or decorative spindles, in either or both of the sides or ends, the measurement shall be determined from the largest diameter of the first turned spindle within a range of 10 cm (4 in.) above the mattress support spring in each of its adjustable positions, to a corresponding point on the first spindle or innermost surface of the opposite side of the crib.

(2) *Place of public accommodation affecting commerce* means any inn, hotel, or other establishment that provides lodging to transient guests, except that such term does not include an establishment treated as an apartment building for purposes of any State or local law or regulation or an establishment located within a building that contains not more than five rooms for rent or hire and that is actually occupied as a residence by the proprietor of such establishment.

§ 1219.2 Requirements for full-size baby cribs.

(a) Except as provided in paragraph (b) of this section, each full-size baby crib shall comply with all applicable provisions of ASTM F 1169–10, Standard Consumer Safety Specification for Full-Size Baby Cribs, approved June 1, 2010. The Director of the Federal Register approves this incorporation by reference in accordance with 5 U.S.C. 552(a) and 1 CFR part 51. You may obtain a copy from ASTM International, 100 Bar Harbor Drive, PO Box 0700, West Conshohocken, PA 19428; telephone 610–832–9585; *http://www.astm.org.* You may inspect a copy at the Office of the Secretary, U.S. Consumer Product Safety Commission, Room 502, 4330 East West Highway, Bethesda, MD 20814, telephone 301–504–7923, or at the National Archives and Records Administration (NARA). For information on the availability of this material at NARA, call 202–741–6030, or go to: *http://www.archives.gov/federal_register/code_of_federal_regulations/ibr_locations.html.*

(b) Comply with the ASTM F 1169–10 standard, except do not comply with section 6.12 of ASTM F 1169–10.

2. Add part 1220 to read as follows:

PART 1220—SAFETY STANDARD FOR NON-FULL-SIZE BABY CRIBS

Sec.
1220.1 Scope and definitions.
1220.2 Requirements for non-full-size baby cribs.

Authority: The Consumer Product Safety Improvement Act of 2008, Pub. Law 110–314, section 104, 122 Stat. 3016 (August 14, 2008).

§ 1220.1 Scope and definitions.

(a) *Scope.* This part establishes a consumer product safety standard for new and used non-full-size baby cribs and applies to the manufacture, sale, contract for sale or resale, lease, sublet, offer, provision for use, or other placement in the stream of commerce on or after (date 6 months after date of publication of a final rule in the **Federal Register**) of a new or used non-full-size baby crib. This part does not apply to play yards.

(b) *Definitions.* (1) *Non-full-size baby crib* means a crib that:

(i) Is intended for use in or around the home, for travel, in a child care facility, in a place of public accommodation affecting commerce and other purposes;

(ii) Has an interior length dimension either greater than 139.7 cm (55 in.) or smaller than 126.3 cm (49¾ in.), or, an interior width dimension either greater than 77.7 cm (30⅝ in.) or smaller than 64.3 cm (25⅜ in.), or both;

(iii) Includes, but is not limited to, the following:

(A) *Portable crib*—non-full-size baby crib designed so that it may be folded or collapsed, without disassembly, to occupy a volume substantially less than the volume it occupies when it is used.

(B) *Crib pen*—a non-full-size baby crib with rigid sides the legs of which may be removed or adjusted to provide a play pen or play yard for a child.

(C) *Specialty crib*—an unconventionally shaped (circular, hexagonal, etc.) non-full-size baby crib incorporating a special mattress or other unconventional components.

(D) *Undersize crib*—non-full-size baby crib with an interior length dimension smaller than 126.3 cm (49¾ in.), or an interior width dimension smaller than 64.3 cm (25⅜ in.), or both.

(E) *Oversize crib*—non-full-size baby crib with an interior length dimension greater than 139.7 cm (55 in.), or an interior width dimension greater than 77.7 cm (30⅝ in.), or both.

(iv) Does not include mesh/net/screen cribs, nonrigidly constructed baby cribs, cradles (both rocker and pendulum types), car beds, baby baskets and bassinets (also known as junior cribs).

(2) *Play yard* means a framed enclosure that includes a floor and has mesh or fabric sided panels primarily intended to provide a play or sleeping environment for children. It may fold for storage or travel.

(3) *Place of public accommodation affecting commerce* means any inn, hotel, or other establishment that provides lodging to transient guests, except that such term does not include an establishment treated as an apartment building for purposes of any State or local law or regulation or an establishment located within a building that contains not more than five rooms for rent or hire and that is actually occupied as a residence by the proprietor of such establishment.

§ 1220.2 Requirements for non-full-size baby cribs.

(a) Except as provided in paragraph (b) of this section, each non-full-size baby crib shall comply with all applicable provisions of ASTM F 406–10, Standard Consumer Safety Specification for Non-Full-Size Baby Cribs, approved June 1, 2010. The Director of the Federal Register approves this incorporation by reference in accordance with 5 U.S.C. 552(a) and 1 CFR part 51. You may obtain a copy from ASTM International, 100 Bar Harbor Drive, PO Box 0700, West Conshohocken, PA 19428; telephone 610–832–9585; *http://www.astm.org.* You may inspect a copy at the Office of

the Secretary, U.S. Consumer Product Safety Commission, Room 502, 4330 East West Highway, Bethesda, MD 20814, telephone 301–504–7923, or at the National Archives and Records Administration (NARA). For information on the availability of this material at NARA, call 202–741–6030, or go to: *http://www.archives.gov/federal_register/code_of_federal_regulations/ibr_locations.html.*

(b) Comply with the ASTM F 406–10 standard with the following additions or exclusions:

(1) Do not comply with section 5.16.2 of ASTM F 406–10.

(2) In addition to complying with section 5.18 of ASTM F 406–10, comply with the following:

(i) 5.19 The manufacturer or importer shall keep and maintain for 6 years after production or importation of each lot or other identifying unit of rigid non-full-size baby cribs, records of sale and distribution. These records shall be made available upon request at reasonable times to any officer, employee, or agent acting on behalf of the Consumer Product Safety Commission. The manufacturer or importer shall permit such officer, employee, or agent to inspect and copy such records, to make such inventories of stock as he or she deems necessary, and to otherwise verify the accuracy of such records.

(ii) [Reserved]

(3) Instead of complying with section 6.10.1 through 6.10.1.2 of ASTM F 406–10, comply with the following:

(i) 6.10.1 *Mattress Support System Vertical Impact Test Requirements*—After testing in accordance with the procedure in 8.6, the crib shall comply with all the requirements of section 5. Key structural elements attached by screws shall not have separated by more than 0.04 in. (1.00 mm) upon completion of testing.

(ii) [Reserved]

(4) In addition to complying with section 6.10.2.2 of ASTM F 406–10, comply with the following:

(i) 6.10.2.3 After completion of the cyclic and static portions of the side tests, the crib shall comply with the General Requirements in section 5 and no spindles or slats shall have broken or completely separated from the top or bottom rail. Complete separation shall be determined by placing a right triangular prism shaped wedge (see Figure A1.13) between two spindles or slats adjacent to the rail from which these have separated and applying a 20-lbf (90–N) pull force to the wedge in a direction normal to the plane of the crib side. If a spindle or slat moves away from the hole in the rail in which it was formerly secured, complete separation has occurred.

(ii) 6.10.2.4 Any spindles or slats that could be rotated during the torque test in 8.7.4 shall comply with the spacing of crib components in the Performance Requirements section 6.3.1 when turned to their most adverse position.

(5) In addition to complying with section 6.14 of ASTM F 406–10, comply with the following:

(i) 6.15 *Movable Side Latch Testing:*

(A) 6.15.1 This test consists of horizontally loading the end while a prescribed force is applied to the movable side(s) (see 8.28).

(B) 6.15.2 The latching mechanism shall not disengage during testing and shall continue to function in the intended manner upon completion of the testing.

(ii) 6.16 *Performance Testing Order*— The performance testing requirements of this section shall be performed in the following order:

(A) Teething rail test

(B) Cyclic side shake test

(C) Crib side latch test

(D) Mattress support system vertical impact test

(E) Mattress support system test

(F) Crib side impact test

(G) Spindle/slat strength test

(6) Do not comply with section 7, *Performance Requirements for Mesh/Fabric Products,* of ASTM F 406–10.

(7) Instead of complying with section 8.6 through 8.6.2.6 of ASTM F 406–10, comply with the following:

(i) 8.6 *Mattress Support System Vertical Impact Test:*

(A) 8.6.1 *General*—This test consists of dropping a specified weight repeatedly onto a polyurethane foam pad covered in vinyl supported by the crib mattress support system. The test assists in evaluating the structural integrity of the crib assembly.

(B) 8.6.2 *Apparatus:*

(C) 8.6.2.1 A guided free-fall impacting system machine (which keeps the upper surface of the impact mass parallel to the horizontal surface on which the crib is secured) (see Figure A1.12.).

(D) 8.6.2.2 A 45 lb (20 kg) impact mass (see Figures A and B).

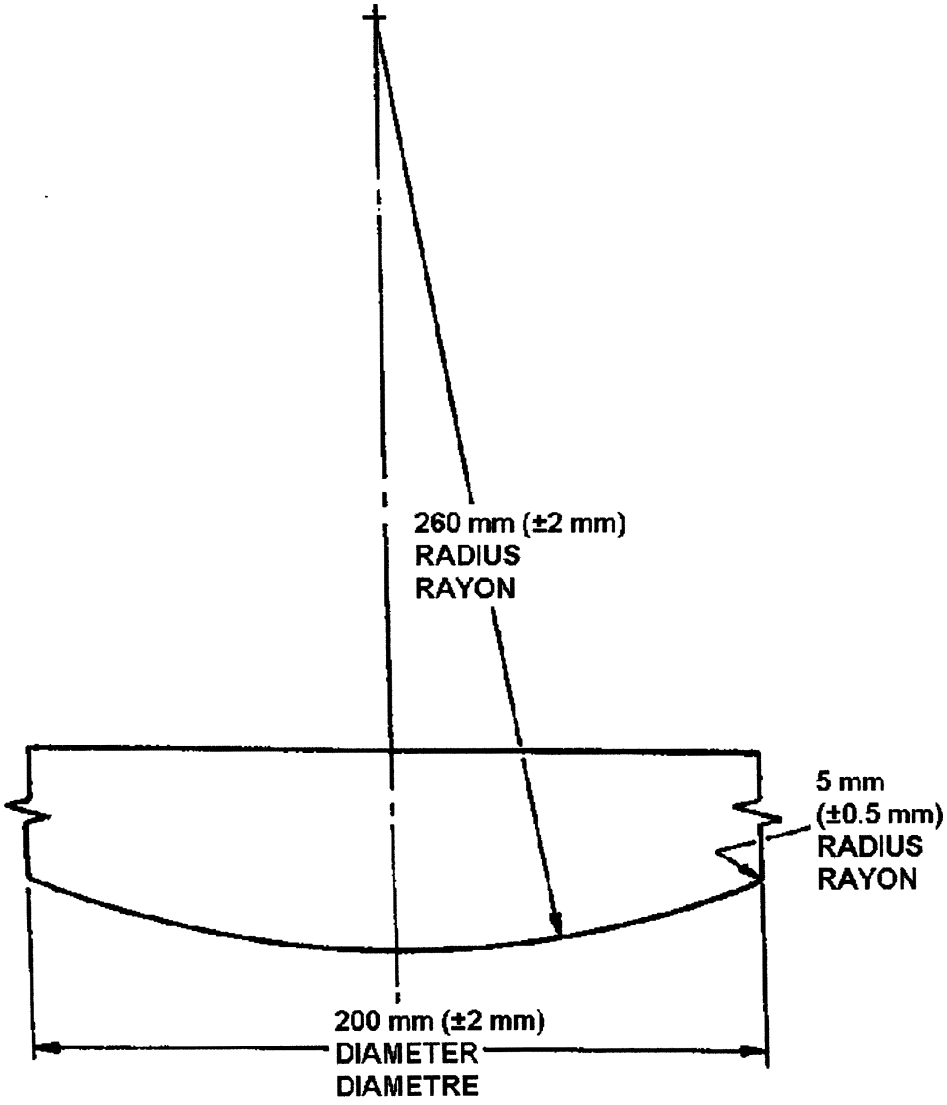

Figure A. Impact Mass Shape

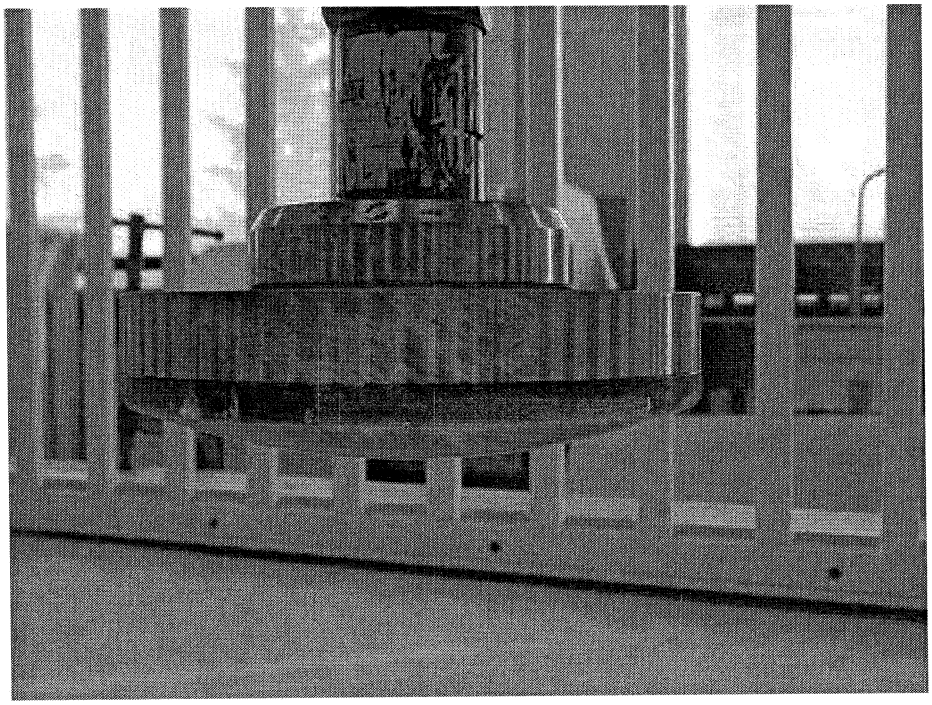

Figure B. Impact Mass

(E) 8.6.2.3 A 6 in. (150 mm) long gauge.

(F) 8.6.2.4 A 2 in. (50 mm) square gauge/spacer block.

(G) 8.6.2.5 A test mattress with a 3 in. (75 mm) thick sheet of polyurethane foam having a density of 1.9 lbs/ft^3 ± 0.4 lbs/ft (30 kg/m^3 ± 6 kg/m^3), a 25% indentation force deflection (IFD) of 32.4 lbs ± 6.7 lbs (144 N ± 30 N) and dimensions that shall not be more than 1 in. (25 mm) shorter and 1 in. (25 mm) narrower than the respective interior dimensions of the product, covered with a tight fitting 8 to 12 gauge vinyl material (tick). The suitability of the test mattress dimensions are to be determined by placing the mattress on the mattress support and pushing it fully over to one side. Measure the gap formed between the mattress and the crib side/end assemblies, which should not be greater than 1 in. (25 mm) in both the length and width.

(H) 8.6.3 *Procedure:*

(I) 8.6.3.1 Adjust the mattress support to its lowest position.

(J) 8.6.3.2 Put the test mattress in place. Do NOT use the mattress supplied with the crib. The same test mattress may be used for testing more than one crib if it meets the requirements of 8.6.2.5.

(K) 8.6.3.3 Secure the product to the horizontal test plane, remove the castors if supplied. Once the test has begun, no attempt shall be made at re-tightening fasteners which may have loosened because of vibration. The test must proceed without any corrective intervention of adjusting the height difference between the drop weight and mattress, until its completion, unless extensive damage, dislodging or deformation occurs during the course of the test, in which case the test shall be terminated.

(L) 8.6.3.4 Position the geometric center of the test mattress below the geometric center of the impact mass.

(M) 8.6.3.5 Adjust the distance between the top surface of the mattress and bottom surface of the impact mass to 6 in. (150 mm) (using the 8.6.2.3 6 in. (150 mm) long gauge) when the impact mass is in its highest position. Lock the impactor mechanism at this height and DO NOT adjust the height during impacting to compensate for any change in distance due to the mattress compressing or the mattress support deforming or moving during impacting.

(N) 8.6.3.6 Allow the 45 lb (20.0 kg) impact mass to fall freely 150 times at the rate of one impact every 4 seconds. Load retraction shall not begin until at least 2 seconds after the start of the drop.

(O) 8.6.3.7 Repeat step 8.6.3.6 at each corner of the mattress support, with the center of the impact mass 6 in. (150 mm) from the two sides forming the corners of the crib. To position the mass for a standard rectangular shaped crib place a 2 in. (50 mm) spacer block against one of the sides of the corner to be tested and move the impact mass until it touches the spacer block (see Figure C). Repeat this process for the other side that makes up the corner to be tested (see Figure D).

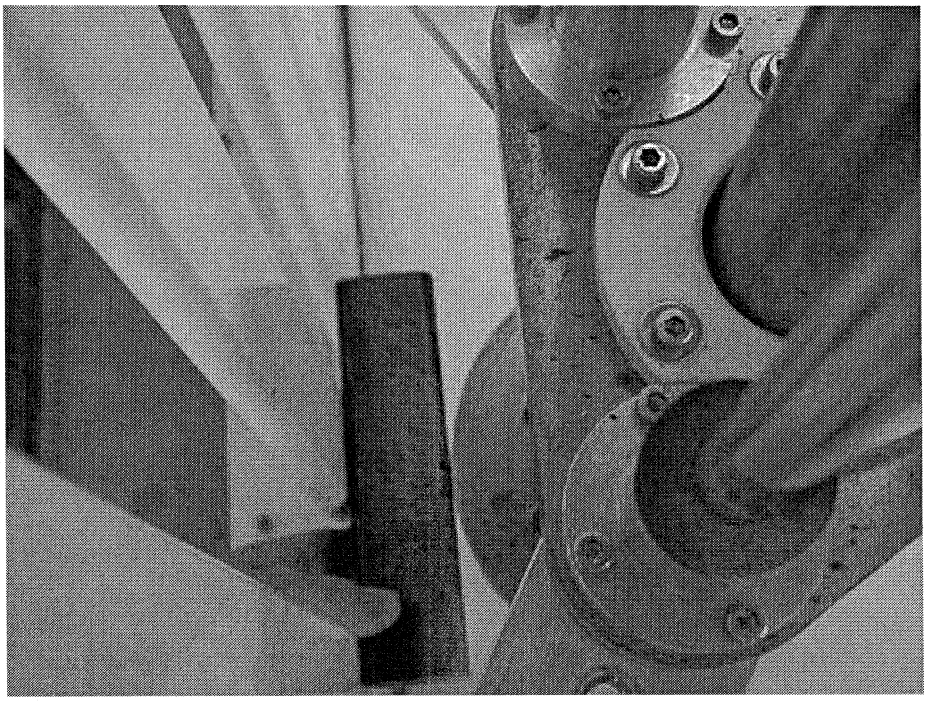

Figure C. Spacer Block (top view).

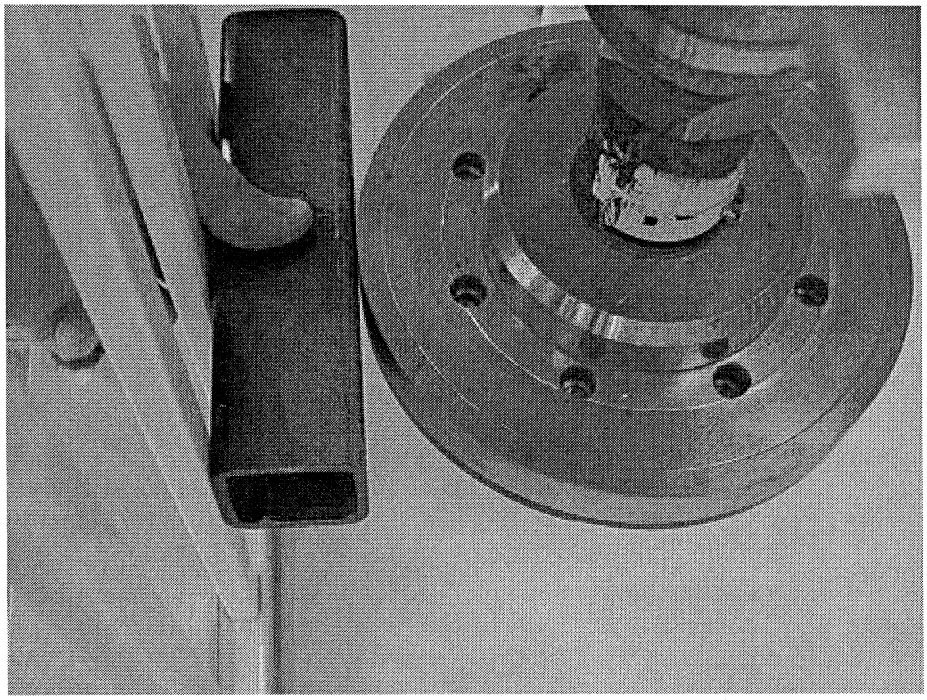

Figure D. Impact Mass and Spacer Block.

(ii) [Reserved]

(8) Instead of complying with 8.7.1.1(2) of ASTM F 406–10, comply with the following:

(i) 8.7.1.1(2) Impactor with contact dimensions of 1.5 by 1 in. (38 by 25 mm) and a weight of 30 lb (13.6 kg) with the 1 in. (25 mm) positioned perpendicular to the length of the frame.

(ii) [Reserved]

(9) Instead of complying with the first sentence of 8.7.2.3 of ASTM F 406–10, comply with the following:

(i) 8.7.2.3 Allow the impactor to free-fall 3 + ½, −0 in. (76 + 13, −0 mm) 250 times at a rate of 4 ± 1 s per cycle using the impactor contact dimensions specified in 8.7.1.1(2). * * *

(ii) [Reserved]

(10) In addition to complying with section 8.7.3.4 of ASTM F 406–10, comply with the following:

(i) 8.7.4 *Crib Side Spindle/Slat Torque Test:*

(A) 8.7.4.1 Apply a torque of 30 lbf-in. (3.4 N-m) at the midpoint in height of each spindle or slat.

(B) [Reserved]

(ii) [Reserved]

(11) Do not comply with sections 8.11 through 8.11.2.4 of ASTM F 406–10.

(12) Do not comply with sections 8.12 through 8.12.2.2 of ASTM F 406–10.

(13) Do not comply with section 8.14 through 8.14.2 of ASTM F 406–10.

(14) Do not comply with sections 8.15 through 8.15.3.3 of ASTM F 406–10.

(15) Do not comply with sections 8.16 through 8.16.3 of ASTM F 406–10.

(16) In addition to complying with 8.27.3 of ASTM F 406–10, comply with the following:

(i) 8.28 *Movable Side Latch Tests:*

(A) 8.28.1 *Procedure for Movable Side Latch Tests:*

(B) 8.28.1.1 Gradually apply within 5 s a vertically downward force of 60 lbf (270 N) through a hardwood block with 2-by-2-in. (50-by-50-mm) contact area to the upper horizontal rail of the unit side at a point that is 6 in. (150 mm) from one end of the movable side rail. While the 60-lbf (270–N) downward force is applied to the movable side, gradually apply within 5 s a 30-lbf (133–N) horizontal force in a direction parallel to the movable side. The point of application of this force is to be coincident with the horizontal extension of the longitudinal centerline of the movable side and 1 in. (25 mm) down from the top of the unit corner post or unit end panel for construction not incorporating unit corner posts (see Fig. A.1.19). Maintain this horizontal force for an additional 30 s, then reverse its direction and maintain for an additional 30 s.

(C) 8.28.1.2 Repeat this procedure at the other end of the unit's movable side and, if the unit has more than one movable side, perform the test at each end of each movable side.

(D) 8.28.1.3 Upon completion of the test, release the movable side latch and operate the movable side. Then raise the side and observe whether the latch automatically engages in the manner intended by the manufacturer.

(ii) [Reserved]

(17) Do not comply with section 9.3.2 through 9.3.2.4 of ASTM F 406–10.

PART 1500—HAZARDOUS SUBSTANCES AND ARTICLES; ADMINISTRATION AND ENFORCEMENT REGULATIONS

3. The authority citation for part 1500 continues to read as follows:

Authority: 15 U.S.C. 1261–1278, 122 Stat. 3016.

4. Revise § 1500.18(a)(13) and (14) to read as follows:

§ 1500.18 Banned toys and other banned articles intended for use by children.

(a) * * *

(13) Any full-size baby crib that is manufactured, sold, contracted to sell or resell, leased, sublet, offered, provided for use, or otherwise placed in the stream of commerce on or after (six months after publication of final rule in the **Federal Register**) and that does not comply with the requirements of part 1219 of this chapter.

(14) Any non-full-size baby crib that is manufactured, sold, contracted to sell or resell, leased, sublet, offered, provided for use, or otherwise placed in the stream of commerce on or after (six months after publication of final rule in the **Federal Register**) and that does not comply with the requirements of part 1220 of this chapter.

* * * * *

Dated: July 14, 2010.

Todd A. Stevenson,

Secretary, U.S. Consumer Product Safety Commission.

[FR Doc. 2010–17594 Filed 7–22–10; 8:45 am]

BILLING CODE 6355–01–P