OUTDOOR POWER EQUIPMENT
INSTITUTE

February 17, 2017

Ms. Caroleene Paul
U.S Consumer Product Safety Commission
4330 E.W. Hwy, Suite 611
Bethesda, MD 20814

Dear Ms. Paul,

Thank you for your participation in the OPEI/ANSI B71.9-2016 Multipurpose Off-Highway Utility Vehicle Canvass review. The 2016 revision was opened for a 45 day canvass and public ballot on October 30, 2015. The initial canvass included 18 members. At the close of the comment period OPEI had received ballots from 15 members, representing an even balance of the User, Producer and General Interest categories. OPEI received 13 affirmative votes, 1 abstention, and 1 negative vote. OPEI received one public request from the Recreational Off-Highway Vehicle Association ("ROHVA") from a copy of the draft, but no public comments. The canvass summary has been attached to this letter for your reference.

OPEI received 34 comments to the proposed revision, including 1 negative comment. The B71.9 Committee and commenter have successfully resolved the negative comment. The remaining comments resulted in several substantive technical changes to the revision, requiring that the proposed revision be re-balloted. The comment summary has been attached to this letter for your reference.

With this letter OPEI is initiating the second canvass ballot of the 2016 revision. The ballot provides canvassees the opportunity to review accepted comments and an opportunity to respond, reaffirm or change their vote.

The updated revision has been attached with this letter. Deletions have been identified by ~~red strikethrough~~ and additions have been identified by red underline. Comments should be limited to these changes at this time. Additionally, new ballot and comment forms have been attached with this letter in the event you have comments to the new revisions or decide to change your vote. **No response is needed to retain your previous vote. If you choose to provide comments or change your vote, please respond by March 18, 2016.**

Thank you again for your participation in the canvass review process. Please feel free to contact me if you have any questions.

Kind regards,

Greg Knott
Vice President, Regulatory Affairs
Outdoor Power Equipment Institute

341 SOUTH PATRICK STREET - ALEXANDRIA, VA 22314 - PH: 703.549.7600 - FAX: 703.549.7604 – WWW.OPEI.ORG

# ANSI/OPEI B71.9-201x, Multipurpose Off-Highway Utility Vehicle Standard
## List of Canvassees

| Canvassee | | Type | Email Address | 1st Canvass Ballot |
|---|---|---|---|---|
| National Off-Highway Vehicle Conservation Council, Inc. | Russ Ehnes | USER | russehnes@bresnan.net | Affirmative |
| BlueRibbon Coalition, Inc. | Don Amador | USER | damador@cwo.com | Affirmative |
| Custom Products of Litchfield, Inc. | Jim Schmitt | USER | jps@800cabline.com | Negative w/ Comments |
| FEMCO, Inc. | Michael Rhea | USER | michael.rhea@femcomfg.com | Affirmative |
| American Sand Association | Niclole Gilles | USER | ngilles@asasand.org | Affirmative |
| American Honda Motor Co. | Garrett Windust | PROD | garrett_windust@ahm.honda.com | Affirmative w/ Comments |
| Kawasaki Motors Corp., U.S.A. | Russ Brenan | PROD | russel.brenan@kmc-usa.com | Affirmative |
| MTD Products, Inc. | Matt Wolf | PROD | matt.wolf@mtdproducts.com | Affirmative w/ Comments |
| Polaris Industries Inc. | Louis Brady | PROD | louis.brady@polarisind.com | Affirmative |
| John Deere | Bob Loehr | PROD | loehrrobertj@johndeere.com | Affirmative w/ Comments |
| DRI (Dynamic Research Inst.) | Scott Kebschull | GEN | sak@dynres.com | Affirmative w/ Comments |
| U.S. Consumer Product Safety Commission (CPSC) | Caroleene Paul | GEN | cpaul@cpsc.gov | Abstain w/ Comments |
| U.S. Forest Service | Ralph Gonzales | GEN | rhgonzales@fs.fed.us | Affirmative |
| U.S. Fish and Wildlife Service | John Blitch | GEN | john_blitch@fws.gov | Affirmative w/ Comments |
| Off-Road Business Association | Fred Wiley | GEN | fwiley@orba.biz | Affirmative |

**ANSI/OPEI B71.9-2016 Response Form**

**The first comment below is an example of how the form should be completed.**

**Name:**_____

**Date:**_____

| | |
|---|---|
| **ANS for Outdoor Power Equipment – Internal Combustion Engine-Powered Handheld and Backpack Blowers and Blowers-Vacuums – Safety Requirements and Performance Testing Procedures** | Document: **ANSI/OPEI B71.9-2016 1st Canvass Response Form 151030.xls** |

| 1 | 2 | (3) | 4 | 5 | (6) | (7) |
|---|---|---|---|---|---|---|
| **CN[1]** | **Clause No./ Subclause No./ Annex** (e.g. 3.1) | **Paragraph/ Figure/Table/ Note** (e.g. Table 1) | **Type of com-ment[2]** | **Language as Written** | **Suggested Revised Language** | **Rationale (justification for addition, deletion, objection, or revision)** |
| 1 | Scott Kebschull | Header of multiple pages | | Ed | ANSI/OPEI B71.9-2012 | ANSI/OPEI B71.9-2016 | It appears that the old header on the odd numbered pages has not been updated for this revision<br><br>160202 AGREE. |
| 2 | Matt Wolf | 1 Scope | | Te | 3) designed to travel on four or more wheels | 3) designed to travel on four or more wheels or tracks; | Scope should include provisions for vehicles that operate on wheels or tracks<br><br>160202 AGREE. The Committee will need to clarify "wheel" references throughout the document as appropriate. |
| 3 | Scott Kebschull | 3.3.2 Accessory (definition) | | Ed | "essential to the vehicles basic operation" | "essential to the vehicle's basic operation" | Apostrophe needed for possessive<br><br>160202 AGREE. |
| 4 | Scott Kebschull | 3.3.17 MOHUV (definition) | | Ed | "intended to transport a person(s)" | "intended to transport one or more persons" | Clarity<br><br>160202 AGREE. |

1 **CN:** Commenter's name.

2 **Type of comment:** **ge** = general **te** = technical **ed** = editorial

**ANSI/OPEI B71.9-2016 Response Form**

**The first comment below is an example of how the form should be completed.**

**Name:**_____

**Date:**_____

| | |
|---|---|
| **ANS for Outdoor Power Equipment – Internal Combustion Engine-Powered Handheld and Backpack Blowers and Blowers-Vacuums – Safety Requirements and Performance Testing Procedures** | Document: **ANSI/OPEI B71.9-2016 1st Canvass Response Form 151030.xls** |

| 1 | 2 | (3) | 4 | 5 | (6) | (7) |
|---|---|---|---|---|---|---|
| **CN[1]** | **Clause No./ Subclause No./ Annex** (e.g. 3.1) | **Paragraph/ Figure/Table/ Note** (e.g. Table 1) | **Type of com-ment[2]** | **Language as Written** | **Suggested Revised Language** | **Rationale (justification for addition, deletion, objection, or revision)** |
| 5 | Matt Wolf | 3.3.17 MOHUV (definition) | | Te | (c) designed to travel on four or more wheels; | (c) designed to travel on four or more wheels or tracks; | Include provisions for vehicles using tracks<br>160202 AGREE. The Committee will need to clarify "wheel" references throughout the document as appropriate. |
| 6 | Matt Wolf | 3.3.36 Two-Wheel Lift ("TWL") | | Ge | Two-Wheel Lift ("TWL"). The occurrence of more than 50.8 mm (2 in) of lift of all inside wheels from the test surface during dynamic stability (Section 8.7) and handling (Section 8.8) tests. Determination of TWL for tilt table testing is defined separately in Section 8.6. | | The definition should not refer one to another section for a second definition of the same term. Consider adding adjectives such as dynamic and static to create two separate definitions. Or eliminate and address in the acceptance criteria.<br>160202 AGREE. The Committee agrees to delete the reference to Section 8.6. The Committee agrees to use "lift-off" for Section 8.6.<br>Additionally, the Committee will delete "two" so-as to clearly include vehicles with more than two inside |

1 **CN:** Commenter's name.

2 **Type of comment:** **ge** = general **te** = technical **ed** = editorial

**ANSI/OPEI B71.9-2016 Response Form**

**The first comment below is an example of how the form should be completed.**

**Name:**_____

**Date:**_____

| | |
|---|---|
| **ANS for Outdoor Power Equipment – Internal Combustion Engine-Powered Handheld and Backpack Blowers and Blowers-Vacuums – Safety Requirements and Performance Testing Procedures** | Document: **ANSI/OPEI B71.9-2016 1st Canvass Response Form 151030.xls** |

| 1 | 2 | (3) | 4 | 5 | (6) | (7) |
|---|---|---|---|---|---|---|
| **CN[1]** | **Clause No./ Subclause No./ Annex** (e.g. 3.1) | **Paragraph/ Figure/Table/ Note** (e.g. Table 1) | **Type of com-ment[2]** | **Language as Written** | **Suggested Revised Language** | **Rationale (justification for addition, deletion, objection, or revision)** |
| | | | | | | wheels.<br>Additionally, there are only three instances of the initials TWL used in the document, one of which is in the definition. I prefer Two-Wheel Lift be spelled out as it is not used often requiring an abbreviated form. (Compare to CG which is used ten times and is a well-known abbreviation). |
| 7 | Bob Loehr | 5.1 Occupant Protective Systems | 5.1.3.1 Seat Belts | Te | Seat belt assemblies shall be provided and should conform to J2292. | Seat belt assemblies shall be provided and shall conform to SAE J2292 or SAE J386.<br>Reference from prior standard allowing Seat belt anchorage to follow SAE J383 should be added between two paragraphs. "Vehicle anchorage locations for seat belts should follow SAE J383 or SAE J2292." | Consistent with prior standard language and FMVSS 210. No related issues cited for vehicle safety.<br>160202 AGREE. |
| 8 | Bob Loehr | 5.1 Occupant Protective Systems | 5.1.3.1 Seat Belts | Te | ELR-not to exceed 60 degrees from the angle…. | ELR feature is different than Tips Lock feature and should be clearly specified in the standard. | Current statement is clear on Tipping angle-but implies that these features are the same.<br>160202 AGREE. The Committee agrees to revise |

1 **CN:** Commenter's name.

2 **Type of comment:** **ge** = general **te** = technical **ed** = editorial

**ANSI/OPEI B71.9-2016 Response Form**

**The first comment below is an example of how the form should be completed.**

**Name:**_____

**Date:**_____

| | |
|---|---|
| **ANS for Outdoor Power Equipment – Internal Combustion Engine-Powered Handheld and Backpack Blowers and Blowers-Vacuums – Safety Requirements and Performance Testing Procedures** | Document: **ANSI/OPEI B71.9-2016 1st Canvass Response Form 151030.xls** |

| 1 | 2 | (3) | 4 | 5 | (6) | (7) |
|---|---|---|---|---|---|---|
| **CN[1]** | **Clause No./ Subclause No./ Annex** (e.g. 3.1) | **Paragraph/ Figure/Table/ Note** (e.g. Table 1) | **Type of com-ment[2]** | **Language as Written** | **Suggested Revised Language** | **Rationale (justification for addition, deletion, objection, or revision)** |
| | | | | | | as follows:<br>"In addition to the requirements of SAE J2292, vehicles shall be equipped with Emergency Locking Retractors (ELR). Manufacturers shall also have provisions for tilt locking, not to exceed 60 degrees from the angle at which it was installed." |
| 9 | John Blitch | 5.5 Start Interlock | | Ed | Have the transmission in neutral or park makes send but then it says "or the service brake is applied". | I would remove that or change it to "and the service brake is applied". | Sounds like you could leave it in gear and start it with your foot on the brake . . . that doesn't seem right. I am sure that given enough force the brake could hold the vehicle against the engine – but light pressure on the brake probably would not. . .and that's experience talking<br>160202 DISAGREE. The application of the service brake is required to prevent unanticipated movement |

1 **CN:** Commenter's name.

2 **Type of comment:** **ge** = general **te** = technical **ed** = editorial

**ANSI/OPEI B71.9-2016 Response Form**

**The first comment below is an example of how the form should be completed.**

**Name:**_____

**Date:**_____

| | |
|---|---|
| **ANS for Outdoor Power Equipment – Internal Combustion Engine-Powered Handheld and Backpack Blowers and Blowers-Vacuums – Safety Requirements and Performance Testing Procedures** | Document: **ANSI/OPEI B71.9-2016 1st Canvass Response Form 151030.xls** |

| 1 | 2 | (3) | 4 | 5 | (6) | (7) |
|---|---|---|---|---|---|---|
| **CN[1]** | **Clause No./ Subclause No./ Annex** (e.g. 3.1) | **Paragraph/ Figure/Table/ Note** (e.g. Table 1) | **Type of com-ment[2]** | **Language as Written** | **Suggested Revised Language** | **Rationale (justification for addition, deletion, objection, or revision)** |
| | | | | | | when not in park or neutral during start-up.<br>To clarify the requirement, the Committee AGREES to add "…as a means to prevent unanticipated movement." |
| 10 | John Blitch | 5.6 Cruise Control | | Te | Cruise Control. Cruise control devices are allowed but shall disengage upon application of service brake and/or clutch, if so equipped. | Disallow cruise control | Cruise Control – really?! I always learned not to use an off road vehicle on the road and never use cruise control when traction is limited – like off road or in the rain, etc. Seems like a strange and dangerous capability for an off-highway vehicle.<br>160202 DISAGREE. Cruise control features are allowed at the discretion of the manufacturer. |
| 11 | Garrett Windust | 5.8 Lighting Equipment | 5.8.1 Head Lamps | Ed | Vehicles shall be equipped with a head lamp system and shall meet the requirements in SAE Standard J1623-FEB94 or subsequent versions, *All Terrain Vehicle Headlamps.* | Vehicles shall be equipped with a head lamp system and each headlamp shall meet the requirements in SAE Standard… | 160202 AGREE |

1 **CN:** Commenter's name.

2 **Type of comment:** **ge** = general **te** = technical **ed** = editorial

**ANSI/OPEI B71.9-2016 Response Form**

**The first comment below is an example of how the form should be completed.**

**Name:**_____

**Date:**_____

| | |
|---|---|
| **ANS for Outdoor Power Equipment – Internal Combustion Engine-Powered Handheld and Backpack Blowers and Blowers-Vacuums – Safety Requirements and Performance Testing Procedures** | Document: **ANSI/OPEI B71.9-2016 1st Canvass Response Form 151030.xls** |

| 1 | 2 | (3) | 4 | 5 | (6) | (7) |
|---|---|---|---|---|---|---|
| **CN[1]** | **Clause No./ Subclause No./ Annex** (e.g. 3.1) | **Paragraph/ Figure/Table/ Note** (e.g. Table 1) | **Type of com-ment[2]** | **Language as Written** | **Suggested Revised Language** | **Rationale (justification for addition, deletion, objection, or revision)** |
| 12 | Matt Wolf | 5.8 Lighting Equipment | 5.8.1 Head Lamps | Ed | Vehicles shall be equipped with a head lamp system and shall meet the requirements in SAE Standard J1623-FEB94 or subsequent revisions, All-Terrain Vehicle Headlamps. | Vehicles shall be equipped with a head lamp system and shall meet the requirements in SAE Standard J1623-FEB94 All-Terrain Vehicle Headlamps or subsequent versions, SAE J1623 – FEB2015 Off-Highway Vehicle Headlamps. | Feb2015 version of SAE J1623 named Off-Highway Vehicle Headlamps, differs from All-Terrain Vehicle Headlamps title used in FEB94 version.<br><br>160202 DISAGREE.<br>To clarify the requirement, the Committee AGREES to delete the standard title. |
| 13 | John Blitch | 5.10 Fuel System | | Te | All fuel system components shall be located, routed, and contained in such a manner as to provide clearance to heat-generating components and to avoid damage from obstacles or projections that may be encountered during normal operation. | Should have a cutoff switch on machines | Cars and trucks are required to be equipped with an automatic fuel cut off switch if they are involved in an accident including a roll-over – these should too.<br><br>160202 DISAGREE. The Committee will consider in future revision. |
| 14 | Scott Kebschull | 5.15 (Equipment Requirements) Owners/Operato r's Manual | 5.15.1 (m) | Ed | "Manufacturers" | "Manufacturer's" | Apostrophe needed for possessive<br><br>160202 AGREE |
| 15 | Caroleene Paul | 5.18 Hang Tag | | Te | | (CPSC) Staff recommends that ROHVA (OPEI) | CPSC staff believes that a hang tag should allow |

1 **CN:** Commenter's name.

2 **Type of comment:** **ge** = general **te** = technical **ed** = editorial

**ANSI/OPEI B71.9-2016 Response Form**

**The first comment below is an example of how the form should be completed.**

**Name:**_____

**Date:**_____

| | |
|---|---|
| **ANS for Outdoor Power Equipment – Internal Combustion Engine-Powered Handheld and Backpack Blowers and Blowers-Vacuums – Safety Requirements and Performance Testing Procedures** | Document: **ANSI/OPEI B71.9-2016 1st Canvass Response Form 151030.xls** |

| 1 | 2 | (3) | 4 | 5 | (6) | (7) |
|---|---|---|---|---|---|---|
| **CN[1]** | **Clause No./ Subclause No./ Annex** (e.g. 3.1) | **Paragraph/ Figure/Table/ Note** (e.g. Table 1) | **Type of com-ment[2]** | **Language as Written** | **Suggested Revised Language** | **Rationale (justification for addition, deletion, objection, or revision)** |
| | | | | | form a task group after publication of the revised standard to develop and finalize the hang tag requirements. Staff will actively participate in such a task group.<br><br>Develop hangtags that convey the following:<br><br>1. ROVs that exhibit a higher TTA at TWL are generally more stable and more resistant to rollovers.<br><br>2. Rollovers can occur on a flat surface when ROVs turn too sharply or at too high a speed.<br><br>3. Consumers should use the stability metric to compare with other vehicles before they make a purchase. | consumers to make informed decisions regarding the stability of ROVs when purchasing an ROV. The hang tag information should also provide a comparison between the rollover resistance of different ROV models. Therefore, the hang tag should be effective at conveying information and must be easily understood by the spectrum of consumers.<br><br>160129 AGREE – The Committee is committed to working with the CPSC staff and others toward the development of more specific hang tag requirements following the publication of this standard. |
| 16 | Matt Wolf | 5.18 Hang Tag | | Ge | A hang tag shall include the manufacturer or brand name and vehicle model, Tilt Table Test results for that vehicle based on TTA at TWL (Section 8.6.2), and warning statements. | | This requirement appears incomplete with regard to having a standard format defined or warning statements. |

1 **CN:** Commenter's name.

2 **Type of comment:** **ge** = general **te** = technical **ed** = editorial

**ANSI/OPEI B71.9-2016 Response Form**

**The first comment below is an example of how the form should be completed.**

**Name:**_____

**Date:**_____

| | |
|---|---|
| **ANS for Outdoor Power Equipment – Internal Combustion Engine-Powered Handheld and Backpack Blowers and Blowers-Vacuums – Safety Requirements and Performance Testing Procedures** | Document: **ANSI/OPEI B71.9-2016 1st Canvass Response Form 151030.xls** |

| 1 | 2 | (3) | 4 | 5 | (6) | (7) |
|---|---|---|---|---|---|---|
| **CN[1]** | **Clause No./ Subclause No./ Annex** (e.g. 3.1) | **Paragraph/ Figure/Table/ Note** (e.g. Table 1) | **Type of com-ment[2]** | **Language as Written** | **Suggested Revised Language** | **Rationale (justification for addition, deletion, objection, or revision)** |
| | | | | | | 160129 DISAGREE. The current draft provides sufficient outline for the intended information at this time. Until further study can be conducted, manufacturers shall determine what specific requirements are appropriate at this time. However, the Committee agrees to further study this section for the next revision per item 15 above. |
| 17 | Matt Wolf | 5.18 Hang Tag | | Ed | A hang tag shall include the manufacturer or brand name and vehicle model, Tilt Table Test results for that vehicle based on TTA at TWL (Section 8.6.2), and warning statements. | A hang tag shall include the manufacturer or brand name and vehicle model, Tilt Table Test results for that vehicle based on Tilt Table Angle at Two-Wheel Lift (Section 8.6.2), and warning statements. | This is the only instance of the initials TTA used in the document. I prefer Tilt Table Angle be spelled out as it is not used that many times to require an abbreviated form.<br><br>160129 AGREE |
| 18 | John Blitch | 6.10 Seat Belt Reminder Indicator | | Te | Seat Belt Reminder Indicator. The vehicle shall be equipped with a warning system that activates a continuous or flashing warning light visible to the operator from the normal operating position, displaying one of the identifying symbols for the seat belt as shown in figure 1, or the words “Fasten Seat Belts” or “Fasten Belts”, for a | Speed should be limited if no belts are used | There should be a system in place that only allows for the operation at low speeds if belts are not fastened or do not allow the vehicle to start unless the belts are in |

1 **CN:** Commenter’s name.

2 **Type of comment:** **ge** = general **te** = technical **ed** = editorial

**ANSI/OPEI B71.9-2016 Response Form**

**The first comment below is an example of how the form should be completed.**

**Name:**_____

**Date:**_____

| | |
|---|---|
| **ANS for Outdoor Power Equipment – Internal Combustion Engine-Powered Handheld and Backpack Blowers and Blowers-Vacuums – Safety Requirements and Performance Testing Procedures** | Document: **ANSI/OPEI B71.9-2016 1st Canvass Response Form 151030.xls** |

| 1 | 2 | (3) | 4 | 5 | (6) | (7) |
|---|---|---|---|---|---|---|
| **CN[1]** | **Clause No./ Subclause No./ Annex** (e.g. 3.1) | **Paragraph/ Figure/Table/ Note** (e.g. Table 1) | **Type of com-ment[2]** | **Language as Written** | **Suggested Revised Language** | **Rationale (justification for addition, deletion, objection, or revision)** |
| | | | | minimum of 8 seconds, when the vehicle's ignition switch is moved to the "on" position or to the "start" position. This time period can be reduced if the operator's seat belt is in use, as determined by the belt latch mechanism being fastened or other method, if so equipped. | | place.<br><br>160202 AGREE. See Sections 5.1.3.2 and 8.2. |
| 19 | Caroleene Paul | 7.2 Test Occupant Equivalent Weight | 7.2.1(b) | Te | The CG of the Test Occupant Equivalent Weight is to be a minimum of 152 mm (6 in) above the lowest point of the operator supporting surface and approximately 254 mm (10 in) forward of the seat back. If a seat back is not used, then the weight shall be positioned approximately 254 mm (10 in) forward of the position of the back of a person seated normally. | The CG of the Test Occupant Equivalent Weight is to be a minimum of ~~152 mm (6 in)~~ 254 mm (10 in) above the lowest point of the operator supporting surface and approximately 254 mm (10 in) forward of the seat back. If a seat back is not used, then the weight shall be positioned approximately 254 mm (10 in) forward of the position of the back of a person seated normally. | Test occupant weight equivalent requirements with the CG location for each occupant that is 10 inches above the seat and 10 inches forward of the seat back.<br><br>160129 DISAGREE. OPEI & ROHVA standards have historically included the 6"reference point and have developed the standard requirements based on this reference CG position. This reference CG position is common throughout OPEI standards, as well as SAE, ANSI and ISO standards for similar products, including ANSI Z130 (golf cars), ANSI Z135 (personal transport vehicles), SEA J2258 (light |

1 **CN:** Commenter's name.

2 **Type of comment:** **ge** = general **te** = technical **ed** = editorial

| 1 | 2 | (3) | 4 | 5 | (6) | (7) |
|---|---|---|---|---|---|---|
| **CN[1]** | **Clause No./ Subclause No./ Annex** (e.g. 3.1) | **Paragraph/ Figure/Table/ Note** (e.g. Table 1) | **Type of com-ment[2]** | **Language as Written** | **Suggested Revised Language** | **Rationale (justification for addition, deletion, objection, or revision)** |
| | | | | | | utility vehicles), ANSI B56.8 (personnel and burden carriers) and ANSI ROHVA 1-2014 (ROVs).<br><br>Substantial testing and reconsideration of the established and proposed test requirements would be needed if this reference value was changed. |
| 20 | John Blitch | 7.4.5 (Test Vehicle Configuration) Proportioning, Positioning, and Securing Cargo Loads for Testing | | Te | 7.4.5 Proportioning, Positioning, and Securing Cargo Loads for Testing a) If a vehicle has more than one designated cargo area, the test load shall be proportionally distributed to each cargo area based on the area's load capacity as a percentage of the total capacity. (For example, if a vehicle has a front rack with a 56.7 kg (125 lb) capacity and the cargo bed has a 226.8 kg (500 lb) capacity, then 20% of the test load should be in the front rack.) Regardless of the proportioning requirement, in no case shall the test load exceed a cargo area capacity. b) A test load shall be placed on each cargo area of the vehicle, and secured in such a manner that each test load's CG is directly above the geometric center of its cargo area when the vehicle is on a level surface within ±1 degree. c) The minimum height of the CG of the load in the cargo bed shall be 127 mm (5 in) or one-half the distance from the cargo bed floor to the highest point of the tailgate in the closed position, whichever is greater. | Additional test needs to be performed and maybe warning stickers too. | Many ATV's and UTV's are used with water tanks on the back of the machine. I think they need to assess capabilities of the vehicle with tanks that carry liquids . . . we do that a lot and I think that changes the dynamics of the vehicle considerably.<br><br>160202 AGREE (warnings). Section 5.15.1 g) requires that manufacturers provide information in the owners manual regarding cargo load impact on vehicle |

1 **CN:** Commenter's name.

2 **Type of comment:** **ge** = general **te** = technical **ed** = editorial

**ANSI/OPEI B71.9-2016 Response Form**

**The first comment below is an example of how the form should be completed.**

**Name:**_____

**Date:**_____

| | |
|---|---|
| **ANS for Outdoor Power Equipment – Internal Combustion Engine-Powered Handheld and Backpack Blowers and Blowers-Vacuums – Safety Requirements and Performance Testing Procedures** | Document: **ANSI/OPEI B71.9-2016 1st Canvass Response Form 151030.xls** |

| 1 | 2 | (3) | 4 | 5 | (6) | (7) |
|---|---|---|---|---|---|---|
| **CN[1]** | **Clause No./ Subclause No./ Annex** (e.g. 3.1) | **Paragraph/ Figure/Table/ Note** (e.g. Table 1) | **Type of com-ment[2]** | **Language as Written** | **Suggested Revised Language** | **Rationale (justification for addition, deletion, objection, or revision)** |
| | | | | If the cargo bed has no tailgate, the CG height of the load will be the greater of 127 mm (5 in) or one-half the distance from the cargo bed floor to the highest point on the cargo bed sides. For cargo beds without sides, the minimum height of the CG of the load shall be 127 mm (5 in) above the flat load surface. d) For cargo racks and other cargo areas with sides and a cargo load capacity exceeding 22.7 kg (50 lb), the minimum height of the CG of the load shall be 127 mm (5 in) or one-half the distance from the flat load surface to the highest point of the rack or cargo area sides, whichever is greater. For cargo racks or other cargo areas without sides, the minimum height of the CG of the load shall be 127 mm (5 in) above the rack or flat load surface. | | handling.<br><br>DISAGREE (tests). MOHUVs are used in countless configurations and load conditions. It is impossible to include every load condition in the standard. |
| 21 | Caroleene Paul | 7.5 | 7.5.2 | Te | | ADD<br>c) The test surface shall be concrete or asphalt that is dry and free from loose material or surface contamination. | (CPSC) Staff recommends this edit to the test methodology in the voluntary standard to improve the standardization of the test methodology<br><br>160129 AGREE |
| 22 | Garrett Windust | 8. Vehicle Tests, Procedures, and Performance Requirements | 8.1.6 Performance Requirement | Te | The maximum forward vehicle speed shall exceed 25 mph (40.2 km/h) | The maximum forward vehicle speed shall exceed 25 mph (40 km/h) | When listing a maximum test speed, Honda requests using whole numbers for the speed measurement conversions.<br><br>160202 DISAGREE. |

1 **CN:** Commenter's name.

2 **Type of comment:** **ge** = general **te** = technical **ed** = editorial

| 1 | 2 | (3) | 4 | 5 | (6) | (7) |
|---|---|---|---|---|---|---|
| **CN[1]** | **Clause No./ Subclause No./ Annex** (e.g. 3.1) | **Paragraph/ Figure/Table/ Note** (e.g. Table 1) | **Type of com-ment[2]** | **Language as Written** | **Suggested Revised Language** | **Rationale (justification for addition, deletion, objection, or revision)** |
| | | | | | | Speed measurement equipment requirements of 7.7 provide enough tolerance so-as not to require rounding speed measurements to whole numbers. |
| 23 | Caroleene Paul | 8.6 Tilt Table Stability | 8.6.1.4(a) | Te | A device to measure the angle of the test surface with an accuracy of ±0.5 degree (0.87% grade). | Clarification that the angle measurement of the tilt table needs to be with an accuracy of ± 0.1 degree.<br><br>A device to measure the angle of the test surface with an accuracy of ±~~0.5~~ 0.1 degree (~~0.87~~0.XX% grade). | (CPSC) Staff recommends that the tilt table test methodology include additional detail on the test methodology for evaluating TTA at TWL, reducing ambiguity and possible variances in the way the tilt table test is conducted<br><br>160129 AGREE |
| 24 | Caroleene Paul | 8.6 Tilt Table Stability | 8.6.2.1 | Te | | A specific test procedure to measure the TTA at TWL for the operator plus passenger configuration. | Staff recommends that the tilt table test methodology include additional detail on the test methodology for evaluating TTA at TWL, reducing ambiguity and possible variances in the way the tilt table test is conducted |

1 **CN:** Commenter's name.

2 **Type of comment:** **ge** = general **te** = technical **ed** = editorial

**ANSI/OPEI B71.9-2016 Response Form**

**The first comment below is an example of how the form should be completed.**

**Name:**_____

**Date:**_____

| | |
|---|---|
| **ANS for Outdoor Power Equipment – Internal Combustion Engine-Powered Handheld and Backpack Blowers and Blowers-Vacuums – Safety Requirements and Performance Testing Procedures** | Document: **ANSI/OPEI B71.9-2016 1st Canvass Response Form 151030.xls** |

| 1 | 2 | (3) | 4 | 5 | (6) | (7) |
|---|---|---|---|---|---|---|
| **CN[1]** | **Clause No./ Subclause No./ Annex** (e.g. 3.1) | **Paragraph/ Figure/Table/ Note** (e.g. Table 1) | **Type of com-ment[2]** | **Language as Written** | **Suggested Revised Language** | **Rationale (justification for addition, deletion, objection, or revision)** |
| | | | | | | 160129 AGREE. The Committee agrees to revise and further clarify the test procedure, including the requirement to test the vehicle to lift-off. |
| 25 | Matt Wolf | 8.6 Tilt Table Stability | 8.6.2.1.1 | Te | a) Slowly tilt platform until lift off of all uphill tires is achieved. Lift off shall be determined by visual inspection. | a) Slowly tilt platform until lift off of all uphill tires is achieved. Lift off shall be determined by visual inspection. Record this value for section 5.18. | Add instruction to record the value for use in Section 5.18.<br>160129 DISAGREE. Paragraph a) is to index the unit against the trip rail.<br><br>The Committee AGREES to revise the procedure to lift the vehicle to 33 degrees to set the vehicle against the trip rail, however there is no need to record this value.<br><br>Additionally, the Committee will revise paragraph c) to test the vehicle to lift-off (per comment 24 above) and record this value. The<br><br>Committee will also remove provision d) requiring the vehicle to settle for one minute, as this will no |

1 **CN:** Commenter's name.

2 **Type of comment:** **ge** = general **te** = technical **ed** = editorial

**ANSI/OPEI B71.9-2016 Response Form**

**The first comment below is an example of how the form should be completed.**

**Name:**_____

**Date:**_____

| | |
|---|---|
| **ANS for Outdoor Power Equipment – Internal Combustion Engine-Powered Handheld and Backpack Blowers and Blowers-Vacuums – Safety Requirements and Performance Testing Procedures** | Document: **ANSI/OPEI B71.9-2016 1st Canvass Response Form 151030.xls** |

| 1 | 2 | (3) | 4 | 5 | (6) | (7) |
|---|---|---|---|---|---|---|
| **CN[1]** | **Clause No./ Subclause No./ Annex** (e.g. 3.1) | **Paragraph/ Figure/Table/ Note** (e.g. Table 1) | **Type of com-ment[2]** | **Language as Written** | **Suggested Revised Language** | **Rationale (justification for addition, deletion, objection, or revision)** |
| | | | | | | longer be relevant when the vehicle is taken to lift-off. |
| 26 | Caroleene Paul | 8.8 Vehicle Handling | 8.8.2 / 8.7.2(f) | Te | The tires shall be inflated to the manufacturer's recommended tire pressure for the test weight. Tires used for the test shall have at least half the tread depth of a new tire. | ADD/REVISE<br>The tires shall be new and inflated to the manufacturer's recommended tire pressure for the test weight. Tires shall be replaced during the test and the test continued if wear exceeds half the tread depth of a new tire at any point during the test. | (CPSC) Staff recommends this edit to the test methodology in the voluntary standard to improve the standardization of the test methodology<br>160129 AGREE |
| 27 | Caroleene Paul | 8.8 Vehicle Handling | 8.8.2 / 8.7.2(c) | Te | Instrumentation and passenger ballasts CG shall be located as close as possible to the passenger side test occupant equivalent weight as defined in 7.2.1. For vehicles designed to transport only an operator, the CG of the instrumentation and any ballast needed to achieve the test weight specified in 8.7.2(b) shall be placed as close to the test operator CG as possible. | ADD/REVISE<br>The center of gravity of the instrumented and loaded test vehicle shall be within 0.5 inch of the center of gravity of the vehicle loaded with an operator and passenger configuration. | (CPSC) Staff recommends this edit to the test methodology in the voluntary standard to improve the standardization of the test methodology<br>160129 DISAGREE. The availability of instrumentation necessary to maintain such tight tolerances in all axes is limited and not practical from a cost or time basis. Additionally, the standards performance requirements were determined so-as to account for small variability in CG locations due to |

1 **CN:** Commenter's name.

2 **Type of comment:** **ge** = general **te** = technical **ed** = editorial

**ANSI/OPEI B71.9-2016 Response Form**

**The first comment below is an example of how the form should be completed.**

**Name:**_____

**Date:**_____

| | |
|---|---|
| **ANS for Outdoor Power Equipment – Internal Combustion Engine-Powered Handheld and Backpack Blowers and Blowers-Vacuums – Safety Requirements and Performance Testing Procedures** | Document: **ANSI/OPEI B71.9-2016 1st Canvass Response Form 151030.xls** |

| 1 | 2 | (3) | 4 | 5 | (6) | (7) |
|---|---|---|---|---|---|---|
| **CN[1]** | **Clause No./ Subclause No./ Annex** (e.g. 3.1) | **Paragraph/ Figure/Table/ Note** (e.g. Table 1) | **Type of com-ment[2]** | **Language as Written** | **Suggested Revised Language** | **Rationale (justification for addition, deletion, objection, or revision)** |
| | | | | | | machine design/constraints. |
| 28 | Scott Kebschull | 8. Vehicle Tests, Procedures, and Performance Requirements | 8.7.4 (d) Required Tools, instrument ation or Other Devices | Ed | "in degrees/seconds" | "in degrees/second" | Typo<br>160202 AGREE |
| 29 | Scott Kebschull | 8. Vehicle Tests, Procedures, and Performance Requirements | 8.7.6 | Te | "Two-wheel lift, as defined in 3.3.35" | "Two-wheel lift, as defined in 3.3.36" | Incorrect reference<br>160202 AGREE |
| 30 | Scott Kebschull | 8. Vehicle Tests, Procedures, and Performance Requirements | 8.8.4 (e) | Ed | "shall be identically across all" | "shall be identical across all" | Typo<br>160202 AGREE |
| 31 | Garrett Windust | 8. Vehicle Tests, Procedures, and Performance Requirements | 8.8.5 d) Test Procedure | Te | Steadily accelerate the vehicle at a rate not to exceed 1 mph/second. The total time for one test run should not exceed 1 minute… | The test procedure states the testing time should not exceed one minute, however, Figure 7 shows the testing time exceeding one minute. | Honda suggests OPEI revisit if the one minute time limit should extend to 2-2.5 minutes.<br>160202 DISAGREE. The Committee believes the steady acceleration reduces the probability of the test operator feathering the throttle, which can |

1 **CN:** Commenter's name.

2 **Type of comment:** **ge** = general **te** = technical **ed** = editorial

| 1 | 2 | (3) | 4 | 5 | (6) | (7) |
|---|---|---|---|---|---|---|
| **CN[1]** | **Clause No./ Subclause No./ Annex** (e.g. 3.1) | **Paragraph/ Figure/Table/ Note** (e.g. Table 1) | **Type of com-ment[2]** | **Language as Written** | **Suggested Revised Language** | **Rationale (justification for addition, deletion, objection, or revision)** |
| | | | | | | result in inaccurate test results. Therefore, the vehicle shall be accelerated at such a rate necessary to complete the test in 1 minute. The Committee agrees to delete time scale on example graph (Figure 7). |
| 32 | Garrett Windust | 8. Vehicle Tests, Procedures, and Performance Requirements | 8.8.6 a)2) Computations | Ed | 2) Calculate Estimated Lateral Acceleration | 2) Calculate Estimated Lateral Acceleration with respect to the ground plane | Adding "with respect to the ground plane" adds clarification to the formula.<br>160202 AGREE. |
| 33 | Scott Kebschull | 8. Vehicle Tests, Procedures, and Performance Requirements | 8.8.7 (b) | Ed | "The vehicles final slope ratio" | "The vehicle's final slope ratio" | Apostrophe needed for possessive<br>160202 AGREE |
| 34 | Jim Schmitt | 8.9 Occupant Protective Structure (OPS) | 8.9.5 b) | Te | The test load shall be 1.5 times the curb weight of the test vehicle or 22,240 N (5000 lb) whichever is less. | "1.5" should be increased by a value that is determined by manufacturers to reflect a higher margin – I personally recommend 2 X GVWR. | Because of the weight disparity potential between "curb" and "gross" vehicle weights for these types of vehicles, I submit that a vehicle that exhibits a significant difference in laden versus un-laden weight, designed to the |

1 **CN:** Commenter's name.

2 **Type of comment:** **ge** = general **te** = technical **ed** = editorial

**ANSI/OPEI B71.9-2016 Response Form**

**The first comment below is an example of how the form should be completed.**

**Name:**_____

**Date:**_____

| | |
|---|---|
| **ANS for Outdoor Power Equipment – Internal Combustion Engine-Powered Handheld and Backpack Blowers and Blowers-Vacuums – Safety Requirements and Performance Testing Procedures** | Document: **ANSI/OPEI B71.9-2016 1st Canvass Response Form 151030.xls** |

| 1 | 2 | (3) | 4 | 5 | (6) | (7) |
|---|---|---|---|---|---|---|
| **CN[1]** | **Clause No./ Subclause No./ Annex** (e.g. 3.1) | **Paragraph/ Figure/Table/ Note** (e.g. Table 1) | **Type of com-ment[2]** | **Language as Written** | **Suggested Revised Language** | **Rationale (justification for addition, deletion, objection, or revision)** |
| | | | | | | minimums of the standard, does not even have a 1 X GVWR crush resistance factor.<br><br>160202 DISAGREE. Based on review of CPSC EIR data, the Committee is not aware of catastrophic MOHUV OPS failures.<br><br>Several committee members noted that due to production variability and tolerance stacks, OPS require significant margin above standard levels. As a result, if the standard was increased to the suggested limits, even compliant designs would require redesign. The Committee is additionally concerned that redesigns to increase OPS strength to meet increased performance requirements would result in significant OPS weight increases and may negatively impact the |

1 **CN:** Commenter's name.

2 **Type of comment:** **ge** = general **te** = technical **ed** = editorial

**ANSI/OPEI B71.9-2016 Response Form**

**The first comment below is an example of how the form should be completed.**

**Name:**_____

**Date:**_____

| | |
|---|---|
| **ANS for Outdoor Power Equipment – Internal Combustion Engine-Powered Handheld and Backpack Blowers and Blowers-Vacuums – Safety Requirements and Performance Testing Procedures** | Document: **ANSI/OPEI B71.9-2016 1st Canvass Response Form 151030.xls** |

| 1 | 2 | (3) | 4 | 5 | (6) | (7) |
|---|---|---|---|---|---|---|
| **CN[1]** | **Clause No./ Subclause No./ Annex** (e.g. 3.1) | **Paragraph/ Figure/Table/ Note** (e.g. Table 1) | **Type of com-ment[2]** | **Language as Written** | **Suggested Revised Language** | **Rationale (justification for addition, deletion, objection, or revision)** |
| | | | | | | vehicle stability and handling characteristics.<br>NOTE: This comment was included with a negative ballot response. The commenter is a B71.9 member and participated in this comment review. By way of vote, the commenter agreed with the committee position not to further pursue a change in this requirement for this revision. |

1 **CN:** Commenter's name.

2 **Type of comment:** **ge** = general **te** = technical **ed** = editorial

American National Standard

# for Multipurpose Off-Highway Utility Vehicles

## Part I: Scope, References & Definitions

### 1. Scope

This standard establishes requirements for equipment, configuration, and performance of Multipurpose Off-Highway Utility Vehicles (MOHUVs).

A MOHUV has features specifically intended for utility use and has the following characteristics:

1) intended to transport a person(s) and/or cargo, with a top speed in excess of 25 mph (40.2 km/h);
2) 2030 mm (80 in) or less in overall width;
3) designed to travel on four or more wheels, two or four tracks, or combinations of four or more tracks and wheels;
4) using a steering wheel for steering control;
5) with a non-straddle seat;
6) with a Gross Vehicle Weight Rating of no more than 1814 kg (4000 lb), and
7) with a minimum cargo capacity of 159 kg (350 lb).

This standard does not apply to:

Vehicles defined by other standards, such as:

American National Standards Institute (ANSI)
*Available from the American National Standards Institute, 25 West 43rd Street, New York, NY 10036.*

ANSI/ITSDF B56.8, *Safety Standard for Personnel and Burden Carriers*
ANSI/ILTVA Z130.1, *Golf Cars – Safety and Performance Specifications*
ANSI/ILTVA Z135, *Personal Transportation Vehicles – Safety and Performance Specifications*
ANSI/SVIA-1, *Four-Wheel All-Terrain Vehicles – Equipment, Configuration, and Performance Requirements* (Vehicles known as ATVs)
ANSI/ROHVA 1-2014, *Recreational Off-Highway Vehicles* (Vehicles known as ROVs)

SAE International
*Available from SAE International, 400 Commonwealth Drive, Warrendale, PA 15096.*

SAE J2258, *Light Utility Vehicles*
SAE J2358, *Low Speed Vehicles*

ASTM International
*Available from ASTM International, 100 Barr Harbor Drive, P.O. Box C700, West Conshohocken, PA 19428.*
ASTM F2011-02e1, *Fun-Carts*
ASTM F2007-07a, *Go-Carts*

Any vehicle that complies with Federal Motor Vehicle Safety Standards

Vehicles commonly known as "dune buggies" or industrial trucks

The effective implementation date of this standard shall be two (2) years after the publication date and shall apply to all products built after that date. Manufacturers may also comply with this standard any time after the publication date.

## 2. Normative References

The following standards contain provisions which, through reference in this text, constitute provisions of this American National Standard. All standards are subject to revision, and parties to agreements based on this American National Standard are encouraged to investigate the possibility of applying the most recent editions of the standards indicated below.

**2.1** The following publications form a part of this specification to the extent specified herein.

American National Standards Institute (ANSI)
*Available from the American National Standards Institute, 25 West 43rd Street, New York, NY 10036.*

ANSI/SAE Z26.1-1996, *Safety Glazing Materials for Glazing Motor Vehicles and Motor Vehicle Equipment Operating on Land Highways*
ANSI Z535.4-2007, *Product Safety Signs and Labels*

National Aeronautics and Space Administration (NASA) Man-Systems Integration Standards, Volume I, Section 3, ANTHROPOMETRY AND BIOMECHANICS.
*Available from NASA Center for AeroSpace Information (CASI), 7115 Standard Drive, Hanover, MD 21076-1320, http://msis.jsc.nasa.gov/sections/section03.htm.*

SAE International
*Available from SAE International, 400 Commonwealth Drive, Warrendale, PA 15096-0001, www.sae.org.*
SAE J383-JUN95, *Motor Vehicle Seat Belt Anchorages; Design Recommendations; Recommended Practice*
SAE J384-JUN94, *Motor Vehicle Seat Belt Anchorages – Test Procedure, Recommended Practice*
SAE J386-FEB2006, *Operator Restraint System for Off-Road Work Machines*

SAE J2292, Combination Pelvic/Upper Torso (Type 2) Operator Restrain Systems for Off-Road Work Machines
SAE J1287-MAY2008, *Measurement of Exhaust Sound Levels of Stationary Motorcycles, Ground Vehicle Standard*
SAE J1623-FEB94 or subsequent versions, *All-Terrain Vehicle Headlamps*

ASTM International
*Available from ASTM International, 100 Barr Harbor Drive, P.O. Box C700, West Conshohocken, PA 19428.*

ASTM E1337-90, *Standard Test Method for Determining Longitudinal Peak Braking Coefficient of Paved Surfaces Using Standard Reference Test Tire*

*United States Department of Agriculture Forest Service Standard for Spark Arresters for Internal Combustion Engines*, 5100-1
*Available from USDA Forest Service, 1400 Independence Ave., SW, Washington, DC 20250 www.fs.fed.us/t-d/programs/fire/documents/5100_1c.pdf.*

*Tire and Rim Association (TRA) Year Book*
*Available from the Tire and Rim Association, 175 Montrose West Ave., Copley, OH 44321 www.us-tra.org/publications.html.*

*Japan Automobile Tyre Manufacturers Association (JATMA) Year Book*
*Available from the Japan Automobile Tyre Manufacturers Assn., No. 33 Mori Bldg., 8th Floor, 3-8-21 Toranomon, Minato-Ku, Tokyo, Japan www.jatma.or.jp/english/media*

## 3. Interpretations, Terms, and Definitions

**3.1 Mandatory and Advisory Rules.** To carry out the provisions of this document, the word *shall* is to be understood as mandatory and the word *should* is to be understood as recommended.

**3.2 Terms.** For purposes of this document, the word *Vehicle* shall mean *Multipurpose Off-Highway Utility Vehicle (MOHUV).*

### 3.3 Definitions

**3.3.1 Accelerator Pedal.** A device that controls the speed of a vehicle.

**3.3.2 Accessory.** Vehicle-manufacturer marketed device, not essential to the vehicle's basic operation, intended for installation on a vehicle (e.g., tire chains, lights, canopy, etc.) to enhance its utility or appearance (exclusive of attachments). An accessory may be installed at the factory, at a dealership, or by a customer.

**3.3.3 Adjustable Seat.** A driver or passenger seat that can be slid forward or backward without the use of any tools while the operator is seated in the seat.

**3.3.4 Attachment.** Vehicle-manufacturer-marketed components designed primarily to perform a specific task and for mounting on a specific vehicle, utilizing the vehicle's power and control system. These components may be detachable (e.g., snowplow, etc.).

**3.3.5 Cargo Area.** Cargo Rack and/or Cargo Bed.

**3.3.6 Cargo Bed.** The large designated area, usually located behind the seating area, that is designed and intended to secure and carry cargo, not passengers. The cargo bed may be flat or equipped with sides and a tailgate.

**3.3.7 Cargo Capacity.** Maximum cargo load recommended by the manufacturer, not including attachments and/or accessories.

**3.3.8 Cargo Load.** The total weight of material or personnel to be transported, excluding the vehicle operator.

**3.3.9 Cargo Rack.** A designated area that is designed and intended to secure

and carry a limited amount of cargo.

**3.3.10 Center of Gravity (CG).** The point at which an object's weight can be assumed to be concentrated for purposes of analysis and computations, and around which an object is in balance when acted upon by gravity.

**3.3.11 Curb Weight.** The total weight of an operational vehicle with original equipment as manufactured or marketed; filled to the maximum capacity of engine fuel, engine oil, transmission and differential fluids, and coolant; but not the weight of the driver, passenger(s), accessories, attachments, and cargo.

**3.3.12 Engine Stop Device.** The device used to stop engine operation.

**3.3.13 Frontal View.** As seen from directly in front, looking horizontally at the vehicle.

**3.3.14 Fuel System.** The combination of fuel tank, fuel lines, pump, filter, and vapor lines, carburetor or injection components, and all fuel system vents and evaporative emission controls systems or devices.

**3.3.15 Gross Vehicle Weight Rating (GVWR).** The maximum allowable total vehicle weight recommended by the manufacturer, including the vehicle's curb weight plus the combined weights of all vehicle occupants, any cargo loads, the trailer tongue weight, and the weights of any installed options, attachments and/or accessories. Installation of options, attachments and/or accessories may reduce the allowable cargo capacity below the stated limit.

**3.3.16 Handholds.** A readily accessible device mounted securely to a vehicle that can be encircled by the fingers of at least one hand for the purpose of holding on to the vehicle.

**3.3.17 Multipurpose Off-Highway Utility Vehicle (MOHUV).** A vehicle having features specifically intended for utility use and having the following characteristics: (a) intended to transport ~~a person(s)~~one or more persons and/or cargo, with a top speed in excess of 25 mph (40.2 km/h); (b) 2030 mm (80 in) or less in overall width; (c) designed to travel on four or more wheels, two or four tracks, or combinations of four or more wheels and tracks; (d) using a steering wheel for steering control; (e) with a non-straddle seat; (f) with a Gross Vehicle Weight Rating of no more than 1814 kg (4000 lb), and (g) a minimum cargo capacity of 159 kg (350 lb). Width shall be exclusive of accessories and attachments.

**3.3.18 Occupant Protective Structure (OPS).** A structure that provides a crush-resistant environment for the properly restrained occupants in the event of a vehicle tip-over or roll-over.

**3.3.19 Occupant Protective System.** A system that includes the ~~Occupant Protective Structures~~OPS, occupant restraints, occupant side retention devices, and handholds.

**3.3.20 Occupant Restraints.** Seat belts and other devices for the purpose of restraining the occupants in a vehicle.

**3.3.21 Occupant Side Retention Devices.** Physical barriers or design features intended to reduce the probability of entrapment of a properly belted occupant's head, upper torso and limbs, between the vehicle and the terrain in the event of a tip-over onto its side. Examples of occupant side retention devices include

passive barriers or structures, or single-hand, single-operation active barriers, including doors and nets. Occupant side retention devices are not considered accessories.

**3.3.22 OPS Test Load Device.** A device capable of securely positioning the platen at the required angles and applying the required load linearly while maintaining the platen angle throughout the entire load application phase, at a required rate of speed (mm per second), and for a specified distance.

**3.3.23 Option.** Alternative configuration of the vehicle as manufactured or marketed by the vehicle manufacturer.

**3.3.24 Owner's/Operator's Manual**. The publication, supplied by the manufacturer with a vehicle, which provides information and instruction regarding safe use, operation, loading (and towing, if applicable), care, and maintenance of the vehicle.

**3.3.25 Parking Brake.** The braking device that prevents movement of a stationary vehicle without the operator being present.

**3.3.26 Parking Mechanism.** The device that locks or restrains the vehicle's drive train to prevent movement of a stationary vehicle without the operator being present.

**3.3.27 Plan View.** As seen from directly above, looking vertically down at the vehicle.

**3.3.28 Platen.** A rigid, unyielding block with its lower surface formed as a flat rectangle.

**3.3.29 Service Brake.** The primary device designed to stop or slow a moving vehicle.

**3.3.30 Service Brake Pedal.** The foot-operated control that, when actuated, causes the service brake(s) to be applied.

**3.3.31 Spark Arrester.** An exhaust system component that limits the size of carbon particles expelled from a vehicle's tailpipe.

**3.3.32 Test Occupant Equivalent Weight.** A weight of 98 kg (215 lb) ± 1% equivalent to a 95$^{th}$-percentile adult male per National Aeronautics and Space Administration (NASA) *Man-Systems Integration Standards*, Volume I, Section 3, ANTHROPOMETRY AND BIOMECHANICS.

**3.3.33 Test Operator.** The person who is exercising control over the vehicle under test. Testing for this standard requires a test operator weighing 98 kg (215 lb) ± 1%.

**3.3.34 Test Vehicle.** The test vehicle is a standard production model or a pre-production model representing the vehicle that will be produced and sold. Unless otherwise specified, the test vehicle shall conform to the manufacturer's recommended specifications.

**3.3.35 Tie-Down Fixture.** The fixture is a rigid, horizontal surface and must be capable of supporting the vehicle's weight plus the loads applied, and prevent movement of the vehicle or the partial assembly during the test.

**3.3.36 ~~Two~~ Wheel Lift ~~("TWL")~~.** The occurrence of more than 50.8 mm (2 in) of lift of all inside wheels or tracks from the test surface during dynamic stability (Section 8.7) and handling (Section 8.8) tests. ~~Determination of TWL for tilt table testing is defined separately in Section 8.6.~~

**3.3.37 Vehicle Width.** The lateral distance between the outermost hard points on each side, exclusive of mirrors, tires or tracks, and accessories, etc.

**3.3.38 Yaw Velocity.** The vehicle's angular velocity about its vertical axis, measured in degrees per second.

### 3.4 Units of measure

This OPEI standard, in agreement with ANSI policy, uses the International System of Units (SI) as the primary measure (listed first) with these exceptions. The primary measure for speed will be miles per hour (mph), the primary measure for slopes or angles will be degrees, the primary measure for acceleration will be gravity (g), and the term "weight" will be used in place of "mass."

# Part II: Vehicle Configuration & Equipment Requirements

## 4. Vehicle Configuration

**4.1 Maximum Width.** Vehicles shall be 2030 mm (80 in) or less in overall width. Width shall be exclusive of accessories and attachments.

**4.2 Maximum Speed.** When tested as per the requirements of 8.1, the maximum vehicle speed shall be greater than 25 mph (40.2 km/h)

**4.3 Minimum Number of Wheels.** Vehicle shall have four or more wheels, or two or four tracks, or combinations of four or more wheels and tracks in contact with the ground.

**4.4 Gross Vehicle Weight Rating (GVWR).** The GVWR of the vehicle shall not exceed 1814 kg (4000 lb).

**4.5 Cargo Capacity.** Vehicles shall have a minimum cargo capacity of 159 kg (350 lb).

**4.6 Designated Seating.** Each designated seating position shall be equipped with occupant restraints and handholds, and shall conform to the requirements of 5.1. Outboard seating positions shall be equipped with occupant side retention devices meeting the requirements of 5.1.4. The seats shall be located within the Occupant Protective Structure envelope.

## 5. Equipment Requirements

**5.1 Occupant Protective Systems.** Vehicles shall be equipped with Occupant Protective Systems, consisting of Occupant Protective Structures (OPS), Occupant Restraints, Occupant Side Retention Devices, and handholds, and shall conform to the requirements of this clause.

**5.1.1 General Requirements.** All occupant protective devices, structures, restraints, etc. shall be designed to accommodate occupants, ranging in size from a 5th-percentile adult male to a 95th-percentile adult male, per the National

Aeronautics and Space Administration (NASA) publication, *Man-Systems Integration Standards*, Volume I, Section 3, ANTHROPOMETRY AND BIOMECHANICS.

**5.1.2 Occupant Protective Structure.** An Occupant Protective Structure (OPS) shall be provided to maintain a crush resistant environment for all occupants in the event of a vehicle tip-over or roll-over and shall conform to the requirements of 8.9.

**5.1.3 Occupant Restraints.** The vehicle shall be equipped with seat belts and other devices intended to retain a belted occupant.

**5.1.3.1 Seat Belts.** At a minimum, Type 2, 3-point seat belt assemblies shall be provided for each designated seating position. Type 2, 3-point restraints (lap/shoulder belts) shall conform to the SAE J2292 Combination Pelvic/Upper Torso (Type 2) Operator Restrain Systems for Off-Road Work Machines.

Optionally, type 2, 3-point restraints (lap/shoulder belts) may conform to the SAE J386-FEB2006 *Operator Restraint System for Off-Road Work Machines*, except as noted below, to accommodate the 3-point restraint system.

The exceptions to SAE J386 for Type II, 3-point restraints are:

a) Replace the requirements of SAE J386, section 4.3, Seat Belt Assembly Installation, with the requirements of SAE Recommended Practice J383-JUN95, section 5.1, Pelvic Restraint Angle Guidelines, and section 6, Location of Upper Torso Restraint Anchorages;

b) Replace the requirements of SAE J386, section 4.4 Performance Requirements, with the Type II 3-point restraint test requirements of SAE Recommended Practice J384 JUN94, and establish a new requirement for Type II 3-point restraints, when tested according to the requirements of SAE J384, that the anchorages, attachment hardware, and attachment bolts shall withstand a minimum 9000-N (2024-lbf) force applied to the lap portion of the seat belt assembly simultaneously with a minimum 9000-N (2024-lbf) force applied to the shoulder portion of the seat belt assembly;

c) Replace the requirements of SAE J386, section 5.1.6 Breaking Strength (of the complete seat belt assembly) with the requirements of SAE Recommended Practice J141-JUN95, section 7, Requirements for Assembly Performance; subsection 7.2, Type II Seat Belt Assembly;

d) Replace the requirements of SAE J386, section 5.2.6 Strength (webbing), with the requirements of SAE Recommended Practice J141-JUN95, section 6, Requirements for Webbing; subsection 6.1.b, Type II Seat Belt Assembly;

e) Replace the requirements of SAE J386, section 5.5.4, Attachment Hardware, with the requirements of SAE Recommended Practice J141-JUN95, section 4.4, Attachment Hardware Strength.

f) Replace requirements of SAE J386, section 5.1.7, Marking (Labeling), with a requirement that each seat belt assembly or the individual sections of an assembly shall be permanently and legibly labeled with the year of

manufacture, model or style number, and name or trademark of the seat belt manufacturer or importer.

In addition to the requirements of SAE J2292 or SAE J386, vehicles shall be equipped with Emergency Locking Retractors (ELR). Seat belts shall also include a tilt locking function at an angle determined by the manufacturer, ~~with the requirement that manufacturers shall determine the appropriate locking point based on the vehicle's intended use, not to exceed 60 degrees from the angle at which it was installed.~~

**5.1.3.2 Seat Belt Reminder System.** The vehicle shall be equipped with a seat belt reminder warning system that meets the requirements of 6.10.

Vehicles with a maximum speed greater than 30 mph (48.3 km/h), as determined by 8.1, shall also be equipped with a system that limits the vehicle's maximum speed when the operator's seat belt is not buckled as outlined by the requirements of 8.2.

**5.1.3.3 Handholds.** A handhold shall be provided for each passenger seating position. A steering wheel shall meet this requirement for the operator. The handhold shall be a readily accessible device mounted securely to a vehicle that can be encircled by the fingers of at least one hand for the purpose of holding on to the vehicle.

Handholds for each passenger shall be located within the volume defined by the Occupant Protective Structure. Such a handhold shall not require an occupant's hand to protrude beyond the same volume when grasping the handhold from the normal seated position.

**5.1.4 Occupant Side Retention Devices.** MOHUVs shall be equipped with occupant side retention devices that reduce the probability of entrapment of a properly belted occupant's head, upper torso, and limbs between the vehicle and the terrain in the event of a tip-over onto its side. Physical barriers or design features may be used to comply with these requirements.

Vehicles with a maximum speed greater than 30 mph (48.3 km/h), as determined by 8.1, shall also meet the occupant side retention device requirements of 8.10.

**5.2 Windshield/Windscreen.** If so equipped, the windshield/windscreen material shall meet the requirements in ANSI/SAE Z26.1-1996, *Safety Glazing Materials for Glazing Motor Vehicles and Motor Vehicle Equipment Operating on Land Highways*. Either items 1, 2, 4, 6, or 7 therein shall be used for windshields/windscreens in MOHUVs. The materials used in windshields/windscreens sold as accessories or after-market products shall also meet these requirements.

**5.3 Service Brakes.** Each vehicle shall be equipped with a service brake system capable of meeting the requirements of 6.4, 8.3, and 8.4 of this standard**.**

**5.4 Parking Brake/Parking Mechanism.** Vehicles shall have a parking brake or parking mechanism capable of holding the vehicle stationary under prescribed conditions. The parking brake or parking mechanism shall meet the requirements of 6.4.2 or 6.5 and 8.5 of this standard**.**

**5.5 Start Interlock.** Vehicles shall be equipped with a start interlock device to prevent

the vehicle's engine from being started unless the transmission is in neutral or park, or the clutch is disengaged, or the service brake is applied as a means to prevent unanticipated movement.

**5.6 Cruise Control.** Cruise control devices are allowed but shall disengage upon application of service brake and/or clutch, if so equipped.

**5.7 Engine Stop Device.** Vehicles shall be provided with a device to allow the operator to stop the engine from the driver's seated position**.** The ignition switch may be used for this purpose. The control for this device shall meet the requirements of 6.9 of this standard**.**

**5.8 Lighting Equipment**

**5.8.1 Head Lamps.** Vehicles shall be equipped with a head lamp system, and each headlamp shall meet the requirements in SAE Standard J1623-FEB94 or subsequent versions~~, *All-Terrain Vehicle Headlamps*~~.

**5.8.2 Tail Lamps.** If so equipped, the tail lamp(s) shall be illuminated when the headlamps are energized.

**5.8.3 Stop Lamps.** If so equipped, the stop lamp(s) shall be illuminated when the service brake pedal is depressed.

**5.9 Seating.** Vehicles shall be equipped with a designated seating position for each intended occupant. A bench-style seat may provide a designated seating position for more than one vehicle occupant.

All occupant seats shall be designed to accommodate occupants, ranging in size from a 5th-percentile adult male to a 95th-percentile adult male per National Aeronautics and Space Administration (NASA) publication, *Man-Systems Integration Standards*, Volume I, Section 3, ANTHROPOMETRY AND BIOMECHANICS. The portion of the seat used by an occupant shall be within the plan view and frontal view outlines of the occupant protective structure.

**5.10 Fuel System.** All fuel system components shall be located, routed, and contained in such a manner as to provide clearance to heat-generating components and to avoid damage from obstacles or projections that may be encountered during normal operation**.**

**5.11 Tires and Tracks.** Vehicles shall be equipped with off-highway tires that follow the load and pressure guidelines as defined by the Tire and Rim Association, Inc. or the Japan Automobile Tire Manufacturers Association, Inc., or with tires or tracks designed for off-highway use. All tires shall carry the following markings: The phrase "Not For Highway Use," or "Not For Highway Service" or "NHS." The information required shall be in letters or numerals no less than 2 mm (0.078 in) in height.

**5.12 Spark Arrester.** Vehicles shall be equipped with a spark arrester that meets the requirements of USDA-FS 5100-1.

**5.13 Security.** Vehicles shall be equipped with a means to deter unauthorized vehicle use, such as an ignition switch with a removable key.

**5.14 Identification Number.** Vehicle frames shall be durably marked with a unique number that is assigned by the manufacturer.

**5.15 Owner's/Operator's Manual**. Vehicles shall be supplied with an Owner's/Operator's Manual furnished by the manufacturer. The manual shall contain

information on driver and passenger(s) safety, and shall address all the topics included in 5.15.1 and 5.17. Additional information may be provided by the manufacturer.

**5.15.1 Information Requirements**

a) The maximum seating capacity of the vehicle. Occupants should only ride in designated seating positions and with only one person in each seat. Do not carry small children on lap;

b) The vehicle should not be operated by individuals under the age of 16, unless the operator has obtained a state-issued motor vehicle driver's/operator's license;

c) The minimum size requirements for any occupant;

d) The importance of always wearing seat belts properly and the use of other occupant-retention devices;

e) The importance of using recommended protective apparel including helmets and eye protection;

f) That improper use, making abrupt maneuvers and operating the vehicle on steep slopes or at speeds too fast for the conditions raises the risk of tip-over or roll-over;

g) How driving on paved surfaces, in the different drive modes (2wd, 4wd, etc.), and carrying people and cargo affect vehicle handling;

h) That the vehicle was not designed or intended to be used on public roadways and that doing so could be a violation of law and may be hazardous;

i) A warning that the vehicle should not be operated by individuals who are under the influence of drugs or alcohol;

j) Tire inflation pressure information and care guidelines;

k) Manufacturer's recommended loading and towing guidelines;

l) Inspections and maintenance necessary to keep the vehicle in safe operating condition; and

m) Manufacturer's or distributor's address or telephone number.

**5.16 Manufacturer's Identification and Vehicle Information Label(s).** Vehicles shall be equipped with a durable label (or labels) that provides consumers, and others, with the name of the vehicle manufacturer, the country of origin, the model name or model designation, the model year or year of manufacture, the GVWR, and a statement that the vehicle complies with the requirements of this standard. This label (or labels) may contain additional information of a similar nature, such as the vehicle's Identification Number as defined in 5.14.

**5.17 Safety and Information Labels.** Vehicles shall be equipped with durable labels as specified in 5.17.1 that address the topics specified in 5.17.2. These labels shall be displayed in the locations as defined in 5.17.3. The labels shall also be reproduced within the Owner's/Operator's Manual. The manufacturer may apply additional safety and information labels as is necessary.

**5.17.1 Format and Durability.** Safety labels shall comply with the format and

durability requirements of *American National Standard for Product Safety Signs and Labels*, ANSI Z535.4-2007. The standard allows multiple warnings to be combined on a single label.

**5.17.2 Information Requirements**

a) A warning regarding the hazards of not wearing a seat belt;

b) A warning that the vehicle should not be operated under the influence of drugs or alcohol;

c) A warning that individuals should not ride in the cargo bed;

d) A warning that the vehicle should not be operated by individuals under the age of 16, unless the operator has obtained a state-issued motor vehicle driver's/operator's license;

e) A warning that the vehicle is for off-highway use only, and use on public roadways could be a violation of law and may be hazardous;

f) The maximum load capacity for each cargo area;

g) A statement to read the Owner's/Operator's Manual before use; and

h) A warning that the vehicle is designed for a maximum number of occupants. Occupants should only ride in designated seating positions with one person in each seating position.

**5.17.3 Placement**

a) Labels addressing the following information requirements shall be affixed in appropriate locations so as to be easily read by the operator when properly seated;

1) A label warning that the vehicle should not be operated under the influence of drugs or alcohol;

2) A label warning that the vehicle is for off-highway use only, and use on public roadways could be a violation of the law and may be hazardous;

3) A label warning that the minimum operator age is 16 unless the operator has obtained a state-issued motor vehicle driver's/operator's license;

4) A label warning that the vehicle is designed for a maximum number of occupants. Occupants should only ride in designated seating positions with one person in each seating position; and

5) A label containing a statement to read the owner's manual before use;

b) A label warning that individuals should not ride in the cargo bed shall be affixed in an appropriate location within or near the cargo bed so as to be easily read by a person standing behind the vehicle.

c) Labels addressing the maximum load capacity or weight limitation for each cargo area shall be affixed to the body of the vehicle adjacent to, in, or on the cargo bed or cargo rack(s)

**5.18 Hang Tag**. A hang tag shall include the manufacturer or brand name and vehicle

model, Tilt Table Test results for that vehicle based on ~~TTA~~ the Tilt Table Angle at ~~TWL~~ lift-off (Section 8.6.2), and warning statements.

## 6. Controls and Displays

### 6.1 General Requirements

**6.1.1 Control Marking and Identification.** Controls shall be clearly and durably marked. Identification is not required for controls that have universal recognition by virtue of their shape, locations, arrangements, and method of actuation. Controls exempted from the marking requirement are the steering wheel, a foot-operated clutch pedal (if so equipped), the service brake pedal, the parking brake, and the accelerator pedal.

**6.2 Vehicle Speed Controls.** The accelerator pedal shall be the primary vehicle speed control and shall be located to the right of the other foot controls and shall be designed for right-foot operation. The direction of motion shall be forward and/or downward to progressively increase vehicle and/or engine speed. When foot force is removed from the accelerator pedal, the vehicle and/or engine speed shall decrease, except when the cruise control (if equipped) is engaged.

**6.3 Steering.** A steering wheel shall be the steering control and shall be located in front of the driver's designated seating position.

**6.4 Brake Controls.** Each brake control shall be capable of meeting the requirements of the following sections:

**6.4.1 Service Brake Pedal.** The service brake pedal shall be located to the left of the accelerator pedal and be foot operated. A forward and/or downward motion of the control shall progressively apply the service brake(s)**.**

**6.4.2 Parking Brake Control.** The parking brake may be actuated by either a hand or foot control. The direction of motion for a hand-actuated control shall be upward and/or rearward for engagement. The direction of motion for a foot-operated control shall be forward and/or downward. The parking brake control shall be designed to minimize inadvertent disengagement.

**6.5 Parking Mechanism Control.** The parking mechanism control shall be designed to prevent inadvertent disengagement of the control from the park or locked position.

**6.6 Directional Control Selector.** Control mechanism shall be marked indicating Forward or Drive, Reverse, and Neutral and/or Park. (Abbreviations or symbols are acceptable.) The directional control mechanism shall be designed to minimize accidental engagement and/or inadvertent change of direction.

**6.7 Transmission Shift Control.** Control shall be provided and located such that it is easily accessible to the operator from the normal operating position with the selected gear or range (H or L) clearly visible.

**6.8 Clutch.** If so equipped, the control shall be actuated with the left foot with the direction of motion forward and/or downward for power-source disengagement. When the power-source disengagement and the service brake pedal are combined, the direction of motion shall be forward and/or downward to enable power-source disengagement and service-brake engagement.

**6.9 Engine Stop Device.** This control shall be provided and located such that it is easily accessible to the operator from the normal operating position.

**6.10 Seat Belt Reminder Indicator.** The vehicle shall be equipped with a warning system that activates a continuous or flashing warning light visible to the operator from the normal operating position, displaying one of the identifying symbols for the seat belt as shown in figure 1, or the words "Fasten Seat Belts" or "Fasten Belts", for a minimum of 8 seconds, when the vehicle's ignition switch is moved to the "on" position or to the "start" position. This time period can be reduced if the operator's seat belt is in use, as determined by the belt latch mechanism being fastened or other method, if so equipped.

**Figure 1**

## Part III: Test Procedures & Performance Requirements

### 7. General Requirements

**7.1 Test Operator.** The test operator shall be skilled in vehicle operation and shall be familiar with the vehicle under test and the test being conducted. The test operator's weight shall be 98 kg (215 lb) ± 1%. If the test operator's weight is less than the required weight, additional weight shall be added to the test operator or the test operator's seat.

**7.2 Test Occupant Equivalent Weight.** For specified test purposes, a weight equivalent shall be used in place of a human occupant. The Test Occupant Equivalent Weight shall be 98 kg (215 lb) ± 1%. The weight used to meet this requirement shall be positioned and secured as per the requirements of 7.2.1.

**7.2.1 Positioning and Securing Test Occupant Equivalent Weight.** The Test Occupant Equivalent Weight shall be positioned and secured to each vehicle seat, as follows.

a) If seats are adjustable, they shall be adjusted to the rearmost position.

b) The CG of the Test Occupant Equivalent Weight is to be a minimum of 152 mm (6 in) above the lowest point of the operator supporting surface and approximately 254 mm (10 in) forward of the seat back. If a seat back is not used, then the weight shall be positioned approximately 254 mm (10 in) forward of the position of the back of a person seated normally.

c) The Test Occupant Equivalent Weight shall be secured to the seat in a manner that prevents any independent movement when the vehicle is accelerated, braked, or tilted.

**7.3 Test Vehicle.** Prior to conducting any testing required by this standard, the

vehicle shall be carefully inspected to ensure that it conforms to the manufacturer's recommended specifications. Tire pressures and suspension adjustments, if so equipped, shall be set to the vehicle manufacturer's specification for the vehicle test weight, as specified in the Owner's/Operator's Manual.

**7.4 Test Vehicle Configuration.** The vehicle will be tested in four (4) specified configurations:

a) At curb weight;

b) At curb weight plus a test operator;

c) At curb weight plus a test operator and one passenger; and

d) At GVWR (gross vehicle weight rating).

In any configuration, the required weights and load(s) may be adjusted to compensate for required instrumentation, or for straps, fixtures, or other devices used to secure test occupant weights or cargo, or for the weight of outriggers used in the Dynamic Stability and Vehicle Handling tests.

**7.4.1 Curb Weight Configuration.** The test vehicle shall be at the curb weight, as defined in 3.3.11.

**7.4.2 Curb Weight Plus a Test Operator Configuration.** The test vehicle shall be at the curb weight, as defined in 3.3.11, plus one test operator, as defined in 7.1, with the test operator positioned in the driver's seat.

**7.4.3 Curb Weight Plus a Test Operator and One Passenger Configuration.** The test vehicle shall be at the curb weight, as defined in 3.3.11, plus one test operator, as defined in 7.1, or a Test Occupant Equivalent Weight, as defined in 7.2, in the operator's seat, and a Test Occupant Equivalent Weight loaded in the front passenger outboard seating position. The Test Occupant Equivalent Weight shall be positioned and secured, as required in 7.2.1.

**7.4.4 GVWR Configuration.** The test vehicle shall be loaded to the manufacturer's stated GVWR, as defined in 3.3.15. The required general loading conditions shall be:

Every designated seating position, as defined in 4.6, shall be occupied, either by the test operator, as defined in 7.1, or loaded with a Test Occupant Equivalent Weight, as defined in 7.2. The specified loading for testing is defined in 7.4.4(a) or (b) and (c). The Test Occupant Equivalent Weight shall be positioned and secured, as required in 7.2.1. Any additional weight necessary to achieve the vehicle's GVWR shall be added proportionally to the cargo areas. Specific loading for testing shall be:

a) For the service brake performance and the service brake fade tests, the test vehicle shall have a test operator, as defined in 7.1, and Test Occupant Equivalent Weight, as defined in 7.2, placed in every designated seating position, or

b) For the parking brake/parking mechanism and a tilt table stability test, the test vehicle shall have a Test Occupant Equivalent Weight as defined in 7.2. placed in the operator's seat, and Test Occupant Equivalent Weight, as defined in 7.2, placed in every designated seating position, and

c) Load additional weight, as necessary to achieve the vehicle's GVWR. Loading should not exceed the maximum cargo capacity for each cargo area. The cargo load(s) shall be secured in the cargo area(s) in accordance with the requirements of 7.4.5. If the GVWR cannot be achieved with a maximum occupant load capacity and the maximum cargo capacity, the vehicle shall be tested in the fully loaded condition that may be below the GVWR.

#### 7.4.5 Proportioning, Positioning, and Securing Cargo Loads for Testing

a) If a vehicle has more than one designated cargo area, the test load shall be proportionally distributed to each cargo area based on the area's load capacity as a percentage of the total capacity. (For example, if a vehicle has a front rack with a 56.7 kg (125 lb) capacity and the cargo bed has a 226.8 kg (500 lb) capacity, then 20% of the test load should be in the front rack.) Regardless of the proportioning requirement, in no case shall the test load exceed a cargo area capacity.

b) A test load shall be placed on each cargo area of the vehicle, and secured in such a manner that each test load's CG is directly above the geometric center of its cargo area when the vehicle is on a level surface within ±1 degree.

c) The minimum height of the CG of the load in the cargo bed shall be 127 mm (5 in) or one-half the distance from the cargo bed floor to the highest point of the tailgate in the closed position, whichever is greater. If the cargo bed has no tailgate, the CG height of the load will be the greater of 127 mm (5 in) or one-half the distance from the cargo bed floor to the highest point on the cargo bed sides. For cargo beds without sides, the minimum height of the CG of the load shall be 127 mm (5 in) above the flat load surface.

d) For cargo racks and other cargo areas with sides and a cargo load capacity exceeding 22.7 kg (50 lb), the minimum height of the CG of the load shall be 127 mm (5 in) or one-half the distance from the flat load surface to the highest point of the rack or cargo area sides, whichever is greater. For cargo racks or other cargo areas without sides, the minimum height of the CG of the load shall be 127 mm (5 in) above the rack or flat load surface.

**7.5 Test Course.** This standard requires dynamic testing of the vehicle to determine the maximum speed in 8.1, braking performance in 8.3 and 8.4, dynamic stability in 8.7, and vehicle handling in 8.8. Unless otherwise specified, the requirements for the test course for the listed tests are as follows:

**7.5.1 Test Course for the Maximum Speed Tests and the Brake Performance Tests**

a) The test course shall be a straight, horizontally flat surface sloping less than 1.0 degree (1.7% grade), and of sufficient length to allow the test vehicle to reach maximum speed and maintain that speed before measurements begin.

b) The test surface shall be concrete or asphalt that is dry and free from loose material or surface contamination.

**7.5.2 Test Course for the Dynamic Stability and Handling Tests**

a) The test course shall be a wide, horizontally flat surface sloping less than 1.0 degree (1.7% grade), and of sufficient length to allow the test vehicle to reach the test speed and maintain speed before initiating the required turning maneuver, and of sufficient (width) area to allow the test vehicle to safely complete the turn while staying on the test course surface.

b) The coefficient of friction for the dynamic stability test shall be 0.75 or greater. Coefficient of friction shall be measured using the procedure found in ASTM E1337-90 or another scientifically valid method that produces repeatable results comparable to ASTM E1337-90.

~~b)~~c) The test surface shall be concrete or asphalt that is dry and free from loose material or surface contamination.

**Formatted:** Indent: Left: 1.75", Right: 0.97", Space Before: 11.1 pt, Line spacing: Exactly 13 pt, Numbered + Level: 1 + Numbering Style: a, b, c, … + Start at: 1 + Alignment: Left + Aligned at: 1.75" + Tab after: 2" + Indent at: 2"

**7.6 Tilt Table Test Platform.** This standard requires the use of a tilting platform to conduct the lateral and longitudinal tilt table stability tests in 8.6, and allows the use of the platform to conduct the parking brake/parking mechanism tests in 8.5. The tilt table test platform shall conform to the requirements of 7.6.1 and 7.6.2.

**7.6.1 Tilt Table Platform Requirements.** The test platform shall be constructed to be an adjustable-slope, single-plane tiltable structure.

**7.6.2 Test Platform Surface.** The platform surface shall be rigid, flat, and large enough to support all wheels or tracks of the vehicle to be tested with a surface finish providing a minimum coefficient of friction of 1.0. A 25 mm (1") high, single piece square rail shall be installed on the platform surface parallel to the tilt axis to engage the side of the downhill tires or tracks to prevent the vehicle from sliding for the Tilt Table Lateral Stability Test of 8.6.2.

**7.7 Speed Measurement.** Speed is measured using a radar gun, GPS, or equivalent means, accuracy to ±1 mph (±2 km/h).

## 8. Vehicle Tests, Procedures, and Performance Requirements

### 8.1 Maximum Forward Speed

**8.1.1 Test Operator.** A test operator meeting the requirements of 7.1 is required for this test.

**8.1.2 Test Vehicle Configuration**

a) Vehicle shall be tested in the curb weight plus a test operator

configuration, as defined in 7.4.2.

b) No-load speed of governed engines shall be set to the maximum specified by the vehicle manufacturer.

**8.1.3 Test Course.** Vehicle shall be tested on a test course as defined in 7.5.

**8.1.4 Required Tools, Instrumentation or Other Devices.** Speed measuring devices as defined in 7.7.

**8.1.5 Test Procedure**

a) A reasonable number of preliminary runs may be made prior to conducting a recorded test.

b) The vehicle is accelerated until maximum speed is reached.

c) The vehicle shall be operated in one direction of travel on the test course, and then in the opposite direction.

d) If more than two measurement runs are made, there shall be an equal number of runs in each direction.

e) The maximum forward speed shall be determined by averaging (calculating the arithmetic mean of) the maximum measured speeds for each run.

**8.1.6 Performance Requirement.** The maximum forward vehicle speed shall exceed 25 mph (40.2 km/h)

**8.2 Maximum Forward Speed for Seat Belt Reminder System**

**8.2.1 Test Operator.** A test operator meeting the requirements of 7.1 is required for this test.

**8.2.2 Test Vehicle Configuration**

a) The vehicle shall be tested in the curb weight plus operator configuration, as defined in 7.4.2.

b) The operator's seat belt shall not be buckled; however, the test operator should be restrained by a redundant restraint system for test safety purposes.

**8.2.3 Test Procedure**. Determine the maximum forward speed of the vehicle as specified by the procedures in 8.1 with the operators seat belt unbuckled.

**8.2.4 Performance Requirement.** The maximum speed of the vehicle with the operator's seat belt unbuckled shall be 15 mph (24.1 km/h) or less.

The following vehicles are not subject to the requirements of 8.2:

**a)** Vehicles powered by diesel engines; or

**b)** Vehicles powered by carbureted engines; or

**c)** Vehicles with a maximum speed less than or equal to 30 mph (48.3 km/h), as determined by 8.1.

**8.3 Service Brake Performance.** The service brake performance is determined by testing the vehicle in the GVWR configuration.

**8.3.1 Test Operator.** A test operator meeting the requirements of 7.1 is required for this test.

**8.3.2 Test Vehicle Configuration.** The vehicle shall be tested in the GVWR Configuration as specified in 7.4.4(a) and (c).

**8.3.3 Test Course.** The test course shall meet the requirements of 7.5.

**8.3.4 Required Tools, Instrumentation, or Other Devices**

a) Speed-measuring devices as defined in 7.7.

b) A device or method to measure average deceleration in g (or $m/s^2$ or $ft/s^2$ if based on measured stopping distance/time to stop).

c) A device or method to measure the service brake pedal actuation force.

**8.3.5 Test Procedure**

a) Burnish the service brakes according to the procedure recommended by the manufacturer.

b) Adjust the brakes according to the manufacturer's recommendation.

c) Accelerate the vehicle to 25 mph (40.2 km/h). If the maximum forward speed of the loaded vehicle does not achieve 25 mph (40.2 km/h), test the vehicle at its maximum speed for this loaded condition.

d) Apply the service brake without exceeding the foot pedal brake actuation force of more than 555 N (125 lbf). Braked wheels or tracks must not lock (stop rotation) during the deceleration portion of the test.

e) Record the maximum brake actuation force used in the conforming brake performance test.

**8.3.6 Performance Requirement.** Vehicles shall be capable of demonstrating an average braking deceleration of 0.46 g (4.5 $m/s^2$ or 14.8 $ft/s^2$) or greater.

**8.4 Service Brake Fade Performance.** This test of ten (10) rapid stops in succession measures the fade resistance of the service brakes.

**8.4.1 Test Operator.** A test operator meeting the requirements of 7.1 is required for this test.

**8.4.2 Test Vehicle Configuration.** The vehicle shall be tested in the GVWR Configuration as specified in 7.4.4(a) and (c).

**8.4.3 Test Course.** The test course shall meet the requirements of 7.5

**8.4.4 Required Tools, Instrumentation or Other Devices**

a) Speed-measuring devices as defined in 7.7.

b) A device or method to measure average deceleration g (or $m/s^2$ or $ft/s^2$ if based on measured stopping distance/time to stop).

c) A device or method to measure service brake pedal actuation force.

**8.4.5 Test Procedure.** All ten (10) required stops shall be made by applying only the service brakes. Nine (9) conditioning stops will be made to heat the

brakes and the tenth (10th) stop will be the measured performance requirement test. The minimum brake actuation force used in the nine (9) conditioning stops shall be the brake actuation force recorded in 8.3.5(f).

The test procedure shall be as follows:

a) Burnish the service brakes according to the procedure recommended by the manufacturer.

b) Adjust the brakes according to the manufacturer's recommendation.

c) Accelerate the vehicle to 25 mph (40.2 km/h). If the maximum forward speed of the loaded vehicle does not achieve 25 mph (40.2 km/h), test the vehicle at its maximum speed for this loaded condition.

d) For each of the nine (9) required conditioning stops, apply the service brake pedal using a brake actuation force that exceeds the force recorded in 8.3.5(f) but does not exceed 555 N (125 lbf).

e) Braked wheels or tracks must not lock (stop rotation) during the braking deceleration for the nine (9) stops. If the braked wheels or tracks lock while using the minimum brake actuation force, as required in 8.4.5(e), it is allowable to use a lower application force. The lower brake actuation force used shall be no lower than 44.5 N (10 lbf) below the level that causes brake lock**.**

f) Repeat steps (d) and (e) to perform nine (9) required conditioning stops within nine (9) minutes.

g) The final test run, stop number ten (10), shall begin within one (1) minute of the completion of the last of the nine (9) conditioning stops. No changes or adjustments to the service-brake system are permitted.

h) Accelerate the vehicle as rapidly as possible to the braking test speed and make a final stop**.**

i) For the final stop, there is no minimum brake actuation force requirement. Apply the service brake foot pedal using a brake actuation force that does not exceed 555 N (125 lbf).

**8.4.6 Performance Requirement.** For the final stop, the test vehicle shall demonstrate an average braking deceleration of no less than 0.30 g (2.9 $m/s^2$ or 9.7 $ft/s^2$).

## 8.5 Parking Brake/Parking Mechanism Performance

**8.5.1 Test Operator.** A test operator is not required for this test.

**8.5.2 Test Vehicle Configuration.** The vehicle shall be tested in the GVWR configuration as specified in 7.4.4(b) and (c).

**8.5.3 Test Course or Test Device.** The test shall be conducted on either:

a) A test course that is a concrete or asphalt surface, dry and free of loose material or surface contamination, having an 11.3-degree slope (20% grade) or greater.

b) A tilt table test platform as defined in 7.6.

**8.5.4 Required Tools, Instrumentation or Other Devices**

a) A device to measure the angle of the test surface with an accuracy of ±0.5 degree (0.87% grade).

b) A device or method to measure the parking brake/parking mechanism actuation force.

**8.5.5 Test Procedure for Testing on a Sloped Surface.** The test procedure shall be as follows:

a) Burnish the parking brakes according to the manufacturer's recommendation. Burnish the service brakes according to the manufacturer's recommendation, if the service brakes are part of the parking brake system.

b) Adjust the parking brake or parking mechanism according to the procedure recommended by the manufacturer.

c) Position the test vehicle. Drive the vehicle downhill to the portion of the slope that is at least 11.3 degrees (20% grade), with the longitudinal axis of the vehicle in the direction of the grade, as shown in figure 2. Apply the service brakes with a force not exceeding 555 N (125 lbf) to stop the vehicle and place the transmission in neutral or park.

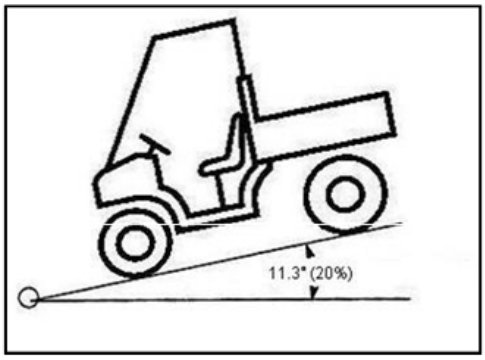


**Figure 2**

d) Apply the parking brake/parking mechanism.

i) *If testing a parking brake:* Apply the parking brake by making a single application of the parking brake control with a force not to exceed 225 N (50 lbf) for a hand grip (squeeze to apply) control, 334 N (75 lbf) for a hand (push, pull, or turn to apply) control, or 555 N (125 lbf) for a foot control.

ii) *If testing a parking mechanism:* Apply the parking mechanism (if not already activated by placing the transmission in park). The application force shall not exceed 225 N (50 lbf) for a hand grip (squeeze to apply) control, 334 N (75 lbf) for a hand (push, pull, or turn to apply) control, or 555 N (125 lbf) for a foot control.

e) Release the service brake and allow the vehicle to stabilize.

f) Mark the position of the vehicle in such a way that subsequent movement of the vehicle can be accurately measured.

g) Leave the vehicle undisturbed for five (5) minutes.

h) Measure and record the difference between the vehicle's position at the beginning of the test and the vehicle's position after the five (5) minute period.

i) This test procedure, 8.5.5(b) through (h), is to be repeated with the front of the vehicle facing uphill as shown in figure 3.

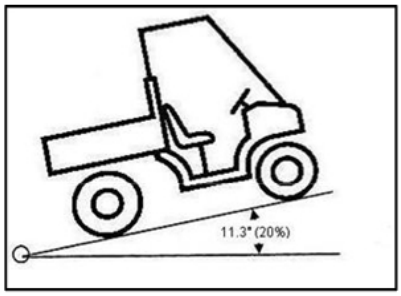


**Figure 3**

**8.5.6 Test Procedure for Testing on a Tilt Table Test Platform.** The test procedure shall be as follows:

a) Burnish the parking brakes according to the manufacturer's recommendation or burnish the service brakes according to the manufacturer's recommendation, if the service brakes are part of the parking brake system.

b) Adjust the parking brake or parking mechanism according to the procedure recommended by the manufacturer.

c) Position the vehicle on the test platform, perpendicular to the tilt axis, so the front of the vehicle will be facing downhill when the platform is raised. Place the transmission in neutral or park.

d) Apply the parking brake/parking mechanism.

   i) *If testing a parking brake:* Apply the parking brake by making a single application of the parking brake control with a force not to exceed 225 N (50 lbf) for a hand grip (squeeze to apply) control, 334 N (75 lbf) for a hand (push, pull, or turn to apply) control, or 555 N (125 lbf) for a foot control.

ii) *If testing a parking mechanism:* Apply the parking mechanism (if not already activated by placing the transmission in park). The application force shall not exceed 225 N (50 lbf) for a hand grip (squeeze to apply) control, 334 N (75 lbf) for a hand (push, pull, or turn to apply) control, or 555 N (125 lbf) for a foot control.

e) Tilt the test platform to at least 11.3 degrees (20% grade), from horizontal, as shown in figure 2. Allow the platform and vehicle to stabilize.

f) Mark the position of the vehicle in such a way that subsequent movement of the vehicle can be accurately measured.

g) Leave the vehicle undisturbed for five (5) minutes.

h) Measure and record the difference between the vehicle's position at the beginning of the test and the vehicle's position after the five (5) minute period.

i) This test procedure, 8.5.6(b) through (h), is to be repeated with the front of the vehicle facing uphill as shown in figure 3.

j) If the vehicle slides before the test angle is achieved, small 10-mm (0.4-in) and narrow 12.7-mm (0.5-in) metal, plastic or wood strips can be installed on the platform surface to engage the ~~tire~~ tread knobs.

**8.5.7 Performance Requirement.** Vehicle motion shall not exceed 25 mm (1 in) in five (5) minutes, when tested according to the procedure specified in 8.5.5 or 8.5.6.

## 8.6 Tilt Table Stability.

### 8.6.1 General test conditions and requirements

**8.6.1.1 Test Operator.** A test operator is not required for this test.

**8.6.1.2 Test Vehicle Configuration.** The vehicle shall be tested in two configurations:

a) The vehicle shall be tested in the curb weight plus a test operator and one passenger configuration, as defined in 7.4.3. Vehicles designed to transport only an operator shall be tested in the curb weight plus a test operator configuration, as defined in 7.4.2. The tires shall be inflated to the pressures recommended by the vehicle manufacturer for the vehicle test weight, as specified in the Owner's/Operator's Manual.

b) The vehicle shall be tested in the GVWR configuration, as defined in 7.4.4(b) and (c). The tires shall be inflated to the pressures recommended by the vehicle manufacturer for the vehicle test weight**,** as specified in the Owner's/Operator's Manual.

**8.6.1.3 Test Device.** The vehicle shall be tested on a tilt table test platform as defined in 7.6.

**8.6.1.4 Required Tools, Instrumentation or Other Devices**

a) A device to measure the angle of the test surface with an accuracy of ±0.~~5~~ 1 degree (0.~~87~~17% grade).

**8.6.1.5 Test Procedure**

a) The position of the vehicle on the test platform shall be maintained by the parking brakes/parking mechanism or a mechanical means to prevent wheel or track rotation, but not by use of wheel chocks.

b) Stability determination shall be tested under static conditions.

**8.6.2 Tilt Table Lateral Stability Tests.** The lateral stability testing requires two vehicle configurations, tested in both lateral directions. Vehicles shall meet the requirements of 8.6 and use the specific test procedures defined in this subclause.

**8.6.2.1 Test Procedure**

a) Place the vehicle on the test platform with the ~~two~~ most downhill tires or tracks positioned as close as possible to uphill side of the 1" rail, with maximum tire or track to rail contact.

b) The steerable wheels or tracks of the vehicle shall be placed in the position which provides maximum contact between the sidewall of the front tire or track and the 1" high rail, as shown in figure 4. Note, depending on the track width, the sidewall of the rear tire(s) or track may make point contact with the 1" rail. An appropriate restraint which does not affect the angle at which the vehicle lifts off the table should be provided to prevent the vehicle from rolling over.

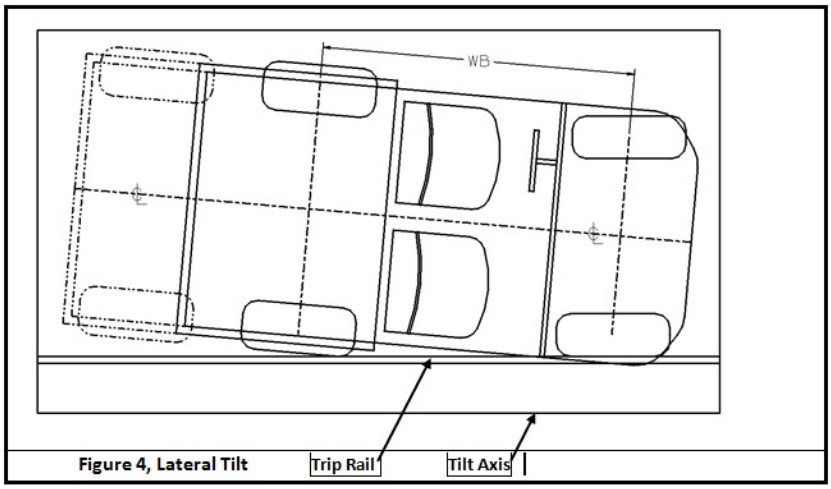


**Figure 4**

**8.6.2.1.1 Curb Weight Plus Operator/Passenger Test**

a) Slowly tilt platform ~~until lift off of all uphill tires is achieved. Lift off shall be determined by visual inspection.~~to 33 degrees to set the vehicle against the trip rail.

b) Lower tilt table to horizontal position.

c) Tilt the platform ~~to at least 33 degrees from horizontal (64.9 % grade)~~until lift off of all uphill tires or tracks is achieved. Lift off shall be determined by visual inspection. Record this value for use with the hang-tag requirements of section 5.18.

~~d) Allow the platform and vehicle to stabilize for at least 1 minute.~~

e. Repeat 8.6.2.1.1 a) and d) with the other side of the vehicle facing the platform axis.

**8.6.2.1.2 GVWR Test**. ~~Repeat 8.6.2.1.1 a) through e) except only tilt the platform to 24 degrees (44.5 % grade) from horizontal.~~
a) Slowly tilt platform to 24 degrees from horizontal.
b) Allow the platform and vehicle to stabilize for at least 1 minute.
c) Repeat 8.6.2.1.2 a) and b) with the other side of the vehicle facing the platform axis.

**Formatted:** Font: Not Bold

**8.6.2.2 Performance Requirement.** Acceptance of the tilt table lateral stability tests shall require that at least one of the supporting tires or tracks on the uphill side does not lift off the platform surface in either direction ~~at~~ before 33 degrees when the vehicle is tested in the test operator plus passenger configuration and at 24 degrees when the vehicle is tested in the GVWR configuration. Surface contact shall be determined by visual inspection.

**8.6.3 Tilt Table Longitudinal Stability Tests**. The longitudinal stability test conditions shall comply with 8.6.1, General Test Conditions and Requirements, except the vehicle will be tested only in one configuration and shall use the specific test procedure defined in this section.

**8.6.3.1 Test Vehicle Configuration.** Vehicle shall be tested in the GVWR configuration, as defined in 7.4.4(b) and (c).

**8.7.3.2 8.6.3.2 Test Procedure**

a) Position the vehicle on the tilt table test platform with the front or the rear of the vehicle facing the platform tilt axis, and with the vehicle longitudinal centerline perpendicular to the platform tilt axis, as shown in figure 5.

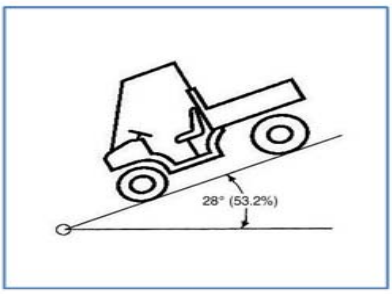

**Figure 5**

b) The steerable wheels or tracks of the vehicle shall be placed in the straight-ahead position, relative to the vehicle's centerline, as shown in figure 4.

c) Tilt the platform to at least 28 degrees from horizontal (53.2% grade).

d) If the vehicle slides before the test angle is achieved, small 10-mm (0.4-in) and narrow 12.7-mm (0.5-in) metal, plastic, or wood strips can be installed on the platform surface to engage the side of the ~~tire~~ tread knobs ~~on the downhill tires~~.

e) Allow the platform and vehicle to stabilize for at least 1 minute.

f) Repeat 8.6.3.2(b) through (g) to test the vehicle with the opposite end of the vehicle facing the platform tilt axis as shown in figure 6.

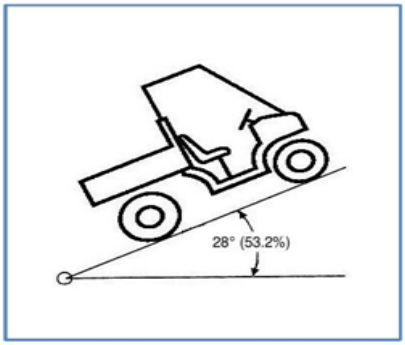


**Figure 6**

**8.6.3.3 Performance Requirement.** Acceptance of the tilt table longitudinal stability test shall require that at least one of the supporting tires or tracks on the uphill side does not lift off the platform surface when tested in each direction. Surface contact shall be determined by visual inspection.

## 8.7 Dynamic Stability

**8.7.1 Test Operator.** A test operator meeting the requirements of 7.1 is required for this test.

### 8.7.2 Test Vehicle Configuration

a) The vehicle shall be tested in the curb weight plus test operator and one passenger configuration, as defined in 7.4.3, except as noted in 8.7.2(b).

Note: Single seat vehicles shall also be tested using the test operator and passenger side test occupant equivalent weight, as defined in 7.4.3.

b) Outriggers (if used) and instrumentation weight shall subtract from and shall not exceed the passenger weight.

c) Instrumentation and passenger ballasts CG shall be located as close as possible to the passenger side test occupant equivalent weight as defined in 7.2.1. For vehicles designed to transport only an operator, the CG of the instrumentation and any ballast needed to achieve the test weight specified in 8.7.2(b) shall be placed as close to the test operator CG as possible.

d) Outrigger system weight shall not exceed 165 lb (70 kg), shall be attached longitudinally between the front and rear tires or tracks of the vehicle as close to the vehicle center of gravity as possible, and shall be symmetric about the vehicle centerline.

e) The vehicle shall be tested in the most open driveline configuration. If the vehicle controls allow the differential lock and four-wheel drive to be disengaged, the vehicle shall be tested with these features disengaged.

f) The tires and tracks shall be new and tires inflated to the manufacturer's recommended tire pressure for the test weight. Tires or tracks ~~used for the test~~ shall ~~have at least half the tread depth of a new tire.~~be replaced during the test and the test continued if wear exceeds half the tread depth of a new tire or track at any point during the test.

g) If the vehicle contains adjustable suspension components (e.g., spring preload, etc.), adjust them to the setting as recommended in the Owner's/Operator's Manual for the test weight.

### 8.7.3 Test Course

a) Vehicle shall be tested on a test course as defined in 7.5.2.

b) Test track ambient temperature shall be greater than 32°F (0°C).

c) Wind velocity shall not exceed 11.2 mph (18 km/h) in any direction during the test.

### 8.7.4 Required Tools, Instrumentation or Other Devices

a) Outrigger system as defined in 8.7.2(d), if used.

b) Weights for adjusting the occupant weight.

c) A vehicle speed measurement system meeting the requirements of 7.7.

d) A means to measure steering wheel input rate in degrees/second~~s~~.

### 8.7.5 Test Procedure

a) The tires or tracks shall be broken-in and warmed up by conducting at

least five (5) J-turn's in each turning direction at a speed and steering angle sufficient of achieving ~~two-wheel~~wheel lift.

b) The test speed shall be 20 +1.0/ -0 mph (32 +1.6/ -0 km/h) for vehicles with a maximum speed less than or equal to 30 mph (48.3 km/h) as determined by 8.1. The test speed shall be 30 + 1.0/-0 mph (48.3 km/h) for vehicles with a maximum speed greater than 30 mph (48.3 km/h) as determined by 8.1

c) Steering wheel input shall be 180 degrees for vehicles with a maximum speed less than or equal to 30 mph (48.3 km/h) as determined by 8.1. Steering wheel input shall be 110 degrees for vehicles with a maximum speed greater than 30 mph (48.3 km/h) as determined by 8.1. A steering stop may be installed to assist the test operator in meeting this requirement.

d) Accelerate the vehicle in a straight line slightly beyond the minimum speed as determined by 8.7.5(b) and release the throttle.

e) When the vehicle has decelerated to the test speed specified in 8.7.5(b), apply the steering wheel input as determined by 8.7.5(c) and maintain that turn angle for at least 3 seconds. Steering wheel input shall reach a peak angular velocity of 500 degrees/second. A passing test with a steering wheel input faster than 500 degrees/second, or an angle greater than required in 8.7.5(c), is allowed.

f) Outriggers shall not touch prior to ~~two-wheel~~wheel lift. If the outriggers touch prior to ~~two-wheel~~wheel lift, they shall be raised and the test repeated.

g) Perform the test for both left and right turns.

**8.7.6 Performance Requirement.** ~~Two-wheel~~Wheel lift, as defined in 3.3.~~35~~36, shall not occur.

## 8.8 Vehicle Handling

**8.8.1 Test Operator.** A test operator meeting the requirements of 7.1 is required for this test.

8.8.2 **Test Vehicle Configuration**. The vehicle shall be configured per 8.7.2.

**8.8.3 Test Course.**

a) A marked 100 ft diameter circle meeting the requirements of 7.5.2 is needed.

The test course diameter may be reduced to 50 ft if it can be determined that the machine will demonstrate understeer (Final Slope Ratio less than 1.0) throughout the lateral acceleration range required for the test.

b) Test track ambient temperature shall be greater than 32°F (0°C).

c) Wind velocity shall not exceed 11.2 mph (18 km/h) in any direction during the test.

**8.8.4 Required Tools, Instrumentation or Other Devices**

a) Outriggers as defined in 8.7.2 (d), if used.

b) Weights for adjusting loaded vehicle weight.

c) A vehicle speed measurement systems meeting the requirements of 7.7

d) A yaw velocity measurement device.

e) Data collection system capable of sampling data at 100 Hz or greater, with suitable anti-aliasing filters included in the data acquisition chain. Anti-aliasing shall be identical~~ly~~ across all acquired channels to avoid inter-channel phase delays.

**8.8.5 Test Procedure**

a) The tires or tracks shall be broken-in and warmed up by conducting at least five (5) J-turn's in each turning direction at a speed and steering angle sufficient of achieving ~~two-wheel~~wheel lift.

b) Follow the 100ft diameter circle at a speed less than 10mph until the mean steer angle required to maintain the circular path is established. Once the mean steer angle has been determined, bring the vehicle to a stop.

c) While the vehicle is stopped, lock the steering wheel at the angle determined in (b).

d) Steadily accelerate the vehicle at a rate not to exceed 1mph/second. The total time for one test run should not exceed 1 minute. The test end run ends when one of the following events occurs:

1) The vehicle no longer accelerates.

2) The vehicle achieves ~~two-wheel~~wheel lift.

Note, the vehicle may not follow the original 100ft diameter circular path.

e) Safely decelerate the vehicle to rest.

f) Repeat test procedure 8.8.5(a) – 8.8.5(e) until five consecutive runs to the left and five consecutive runs to the right have been completed. If it is believed that a test run is not valid (driver error, equipment malfunction, change in test track condition, etc.), additional runs may be added so as long as 5 consecutive runs in that direction are achieved. A total of 10 runs, 5 left and 5 right, shall be used in the computations.

**8.8.6 Computations**

a) Determine Data Regions for Analysis:

1) Filter all data channels using a low-pass Butterworth filter with a cut-off frequency of 1 Hz.

2) Calculate Estimated Lateral Acceleration with respect to the ground plane:

Ay (g) = [Yaw Velocity (rad/sec) * Vehicle Speed (m/s)] / 9.8 ($m/s^2$)

3) Use the estimated lateral acceleration, Ay, to determine the start and stop points for the following regions:

i) Initial Region from 0.1 to 0.2 g

ii) Final Region from 0.4 to 0.5 g

Note: Select the first continuous zone of data where the value increases from 0.4 to 0.5g (indicated by the black line in the figure 7 below) as opposed to any momentary value that crosses the 0.4g or 0.5g line.

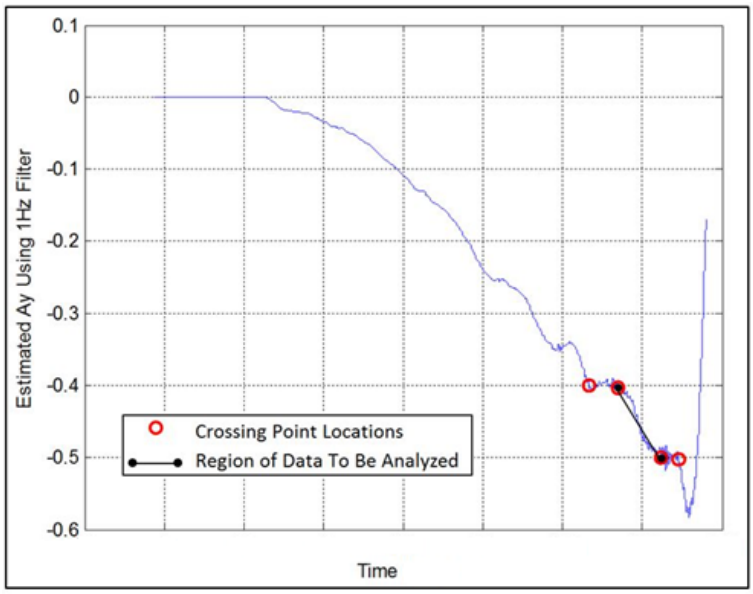


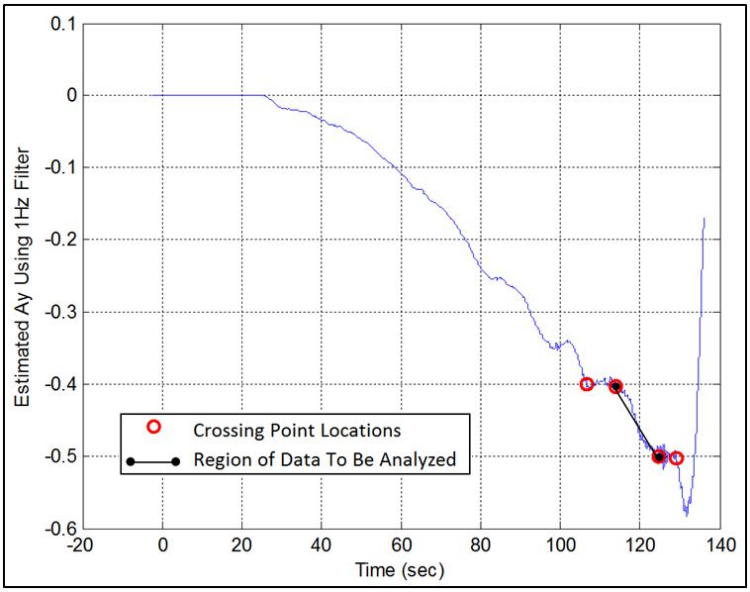


**Figure 7**

b) Determine Yaw Velocity and Speed Slopes. Using the unfiltered data, plot both the yaw velocity versus time and the vehicle speed vs. time for the first test run. Independently calculate the linear regressions below using the Initial and Final Regions derived in 8.8.6(a)(3).

Y1 = linear slope of the yaw velocity versus time plot for Initial Region
Y2 = linear slope of the yaw velocity versus time plot for Final Region
V1 = linear slope of the vehicle speed versus time plot for Initial Region
V2 = linear slope of the vehicle speed versus time plot for Final Region

c) Calculate the slope ratio (R) for the test run using the following equation:

R = (Y2/V2)/(Y1/V1)
Note: This value may be negative or positive.

d) Determine the Final Slope Ratio. Repeat steps 8.8.6(a) through 8.8.6(d) for all ten test runs. Calculate the final slope ratio value for left and right turning directions by averaging the absolute values of the 5 runs in each direction.

Final Slope Ratio Right = Average of the absolute values of the 5 right turn test runs.

Final Slope Ratio Left = Average of the absolute values of the 5 left turn test runs.

**8.8.7 Performance Requirements.** A vehicle passes this handling test if neither of the following occurs before 0.5g for 5 successive tests in each turning direction:

a) The vehicle achieves ~~TWL~~wheel lift; or
b) The vehicle's final slope ratio exceeds 4.5.

Vehicles with a maximum speed of less than or equal to 30 mph (48.3 km/h), as determined by 8.1, need not comply with this requirement.

**8.9 Occupant Protective Structure (OPS)**

**8.9.1 Test Operator.** A test operator is not required for this test.

**8.9.2 Test Vehicle Configuration.** A manufacturer may choose to test

a) either a complete vehicle, or

b) only a partial assembly of the vehicle that includes the vehicle frame and the complete OPS structure and all OPS structural components and attachments including mounts, and any bracing, and all attachment hardware. The engine and drive train, suspension, body, seats, and other components do not have to be tested, unless these are part of the OPS.

If the complete vehicle is used, it shall be tested in the curb weight configuration, as defined in 7.4.1, but all fluids may be drained or emptied. In addition, accessories shall be removed before testing.

**8.9.3 Test Devices.** This test requires a platen and an OPS Test Load Device to apply the required downward force on the OPS at the required angle and at the required rate, and a tie-down fixture to mount and hold the vehicle or partial assembly that is to be tested.

a) The platen shall have a rigid, unyielding lower surface formed as a flat rectangle. The platen dimensions shall have a minimum width of 762 mm (30 in) and a minimum length of 1829 mm (72 in), as shown in figures 9 through 12.

b) The OPS Test Load Device shall be capable of:

- securely positioning the platen, at the required angles; with the lateral axis of the test platen at a lateral outboard angle of 25 ± 2 degrees from horizontal, and with the longitudinal axis of the test platen at a forward or rearward down angle (side view) of 5 ± 1 degrees below the inclination angle of the top surface of the OPS, while exerting a downward force perpendicular to the platen load application surface equal to 1.5 times the curb weight of the test vehicle or 22,240 N (5000 lb), whichever is less, and
- applying the specified force in a linear direction, while maintaining the platen angles throughout the entire load application phase, at a required rate of speed no greater than 12.7 mm/s (0.5 in/s), and
- traveling more than 127 mm (5 in) after initial contact with the OPS.

c) OPS Test Tie-Down Fixture. The fixture shall be a rigid, horizontal surface and shall be capable of supporting the vehicle's weight plus the loads applied and preventing movement of the vehicle, or the partial assembly, during the test.

NOTE: Alternative OPS loading technologies to existing conventional roof crush testing machines may require the vehicle chassis to be positioned on a lateral and/or longitudinal incline, this is deemed to be an acceptable practice as long as the specified angles of 5 and 25 degrees are maintained with relationship to the OPS structure.

**8.9.4 Required Tools, Instrumentation or Other Devices**

a) Accurate scale(s) to determine the curb weight of a test vehicle within 1%.

b) Load measuring device to precisely measure the applied load within 1%.

c) Deflection measuring device to accurately measure the OPS deflection within 5 mm (0.2 in).

**8.9.5 Test Procedure.** A new vehicle and/or OPS partial assembly may be used for each test.

a) Weigh the test vehicle to an accuracy of within 1%. If the test will be conducted with only the partial assembly, an equivalent test vehicle shall be accurately weighed and that measurement shall be the basis for the test load.

b) The test load shall be 1.5 times the curb weight of a test vehicle or 22,240 N (5000 lb) whichever is less. Determine and record the test load.

c) Rigidly mount or secure the frame of the vehicle or the partial assembly on the tie-down fixture as shown in figure 8.

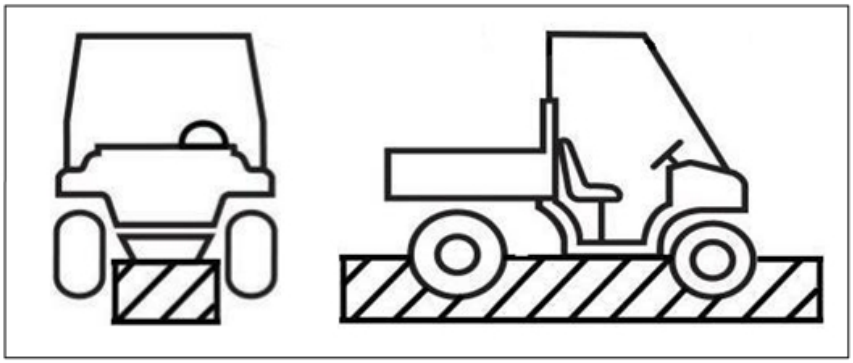

**Figure 8**

d) Position the test platen

i) *For Front-Corner Test*. To test either a front right or front left corner:

- Position the test platen longitudinally as shown in figure 9. The test platen longitudinal axis is at a forward down angle (side view) of 5 ± 1 degrees below the inclination angle of the top surface of the OPS and is parallel to the vertical plane through the vehicle's longitudinal centerline.

- Position the test platen laterally as shown in figure 10. The test platen lateral transverse axis is at an outboard angle, in the front view, of 25 ± 2 degrees below the inclination angle of the top surface of the OPS.

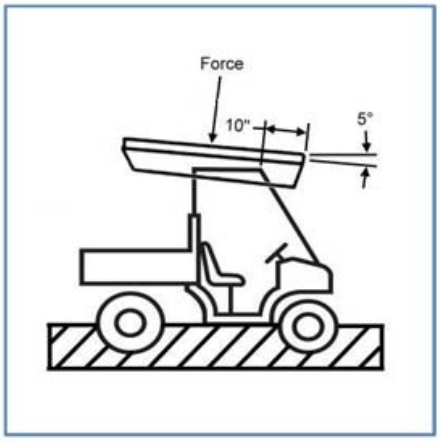


**Figure 9**

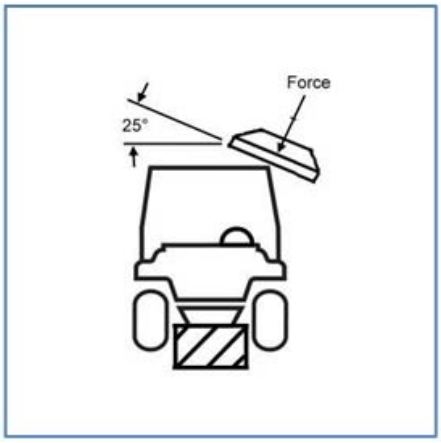


**Figure 10**

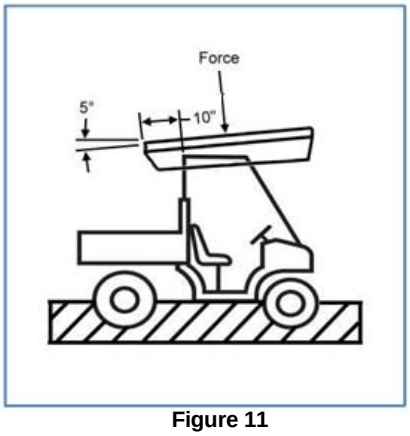


**Figure 11**

ii) *For Rear-Corner Test*. To test either a rear right or rear left corner:

- Position the test platen longitudinally as shown in figure 11. The test platen longitudinal axis is at a forward up angle (side view) of 5 ± 1 degrees above the inclination angle of the top surface of the OPS and is parallel to the vertical plane through the vehicle's longitudinal centerline.
- Position the test platen laterally as shown in figure 12. The test platen lateral transverse axis is at an outboard angle, in the front view, of 25 ± 2 degrees below the inclination angle of the top surface of the OPS.

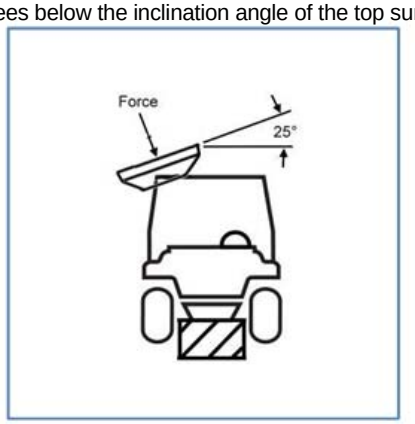


**Figure 12**

iii) The test platen lower surface is tangent to the surface of the vehicle.

e) Initial contact point of the test platen, or center of the initial contact area.

i) *For Front-Corner Test*. The initial contact point or center of the initial contact area shall be on the longitudinal centerline of the lower surface of the test platen and 254 mm + 25.4 mm (10 in + 1 in) from the forward-most point of that centerline.

ii) *For Rear-Corner Test*. The initial contact point or center of the initial contact area shall be on the longitudinal centerline of the lower surface of the test platen and 254 mm + 25.4 mm (10 in + 1 in) from the rearward-most point of that centerline.

f) Lower the test platen until there is contact with the OPS. Recheck all angles and the initial contact point. Measure and record the starting position of the test platen.

g) Application of force

i) Apply force in a downward direction perpendicular to the test platen at a rate not to exceed 12.7 mm/s (0.5 in/s) until reaching the force as determined in 8.9.5(b).

ii) The test platen shall be restricted throughout the test to only move downward, in a straight line in the direction of the applied force, without tilting or rotation, with the lower surface oriented as specified in 8.9.5(d) and (e).

iii) The test shall be completed within 120 seconds.

h) Stop applying force when one of the following conditions exists:

i) The force being applied to the OPS reaches the maximum applied force as determined in 8.9.5(b).

ii) The test platen travels more than 127 mm (5 in).

iii) The vehicle or the partial assembly has shifted or moved.

i) Measure the final position of the test platen. The test deflection, measured along the line of the applied force, shall be the difference between the starting position, as measured and recorded in 8.9.5(f), and the final position.

**8.9.6 Performance Requirements.** The measured test deflection of the OPS shall not exceed 127 mm (5 in) when subjected to the force, as determined in 8.9.5(b), and applied as required in 8.9.5(g). The left and right front sides and the left and right rear sides of the OPS shall be capable of meeting this requirement.

**8.10 Occupant Side Retention Devices.**

**8.10.1 Test Operator.** A test operator is not required for this test.

**8.10.2 Test Vehicle Configuration**. The vehicle shall be tested in the curb weight configuration as defined in 7.4.1, however all fluids may be drained or emptied. In addition, all accessories shall be removed before testing. Vehicles with factory installed accessory doors should not remove the doors for this test.

**8.10.3 Required Tools, Instrumentation or Other Devices.**

a) Test Probe. Test forces should be distributed using a test probe having a

circular, flat surface 76 mm (3 in) in diameter. The applicator's flat surface may be permitted to swivel to accommodate design characteristics, as well as elastic deformation, and need not remain perpendicular to the force direction. The test probe edges should have a radius of 6 mm (0.25 in) to avoid cutting test surfaces.

b) Force gauge.

**8.10.4 Test Procedure.** Apply an outward force of 725 N (163 lbf.) through the test probe at a Point R, perpendicular to the outside side plane of the occupant side retention device, 432mm (17 in) above the base of the seat and 152mm (6 in) forward of the seatback for 10 seconds. See Figure 13.

For vehicles with adjustable seats, or seats with multiple seating positions, Point R shall be determined and tested with the seat in both the forward-most and rearward-most positions.

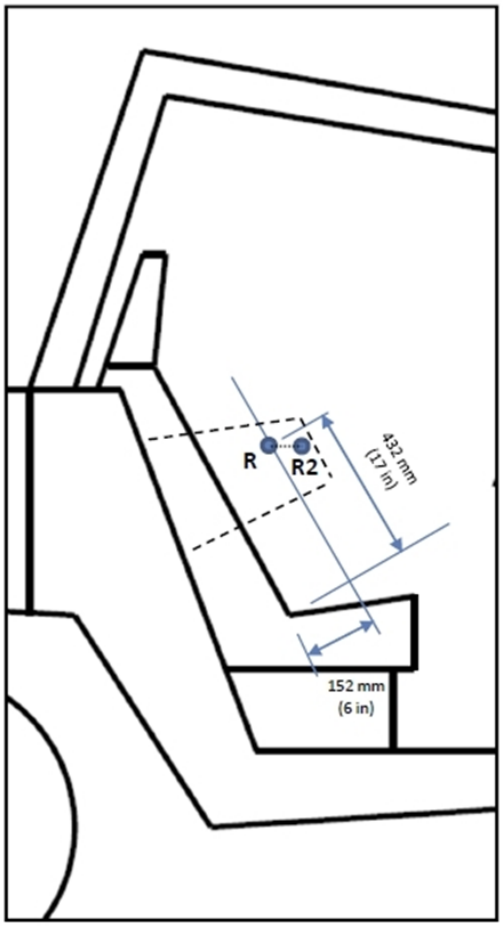


**Figure 13**

**8.10.5 Performance Requirements.** The occupant side retention device shall encompass Point R, and shall not deflect more than 100 mm (4 in) past the vehicle width as a result of the force applied in 8.10.4.

Vehicles with a maximum speed of less than or equal to 30 mph (48.3 km/h), as determined by 8.1, need not comply with this requirement.

**8.11 Sound Level**

**8.11.1 Test Procedure.** The sound level test shall be conducted according to SAE J1287-MAY08, *Measurement of Exhaust Sound Levels of Stationary Motorcycles*.

**8.11.2 Performance Requirement.** The sound level as measured from the sound level test shall be no more than 96 dB (A).

OUTDOOR POWER EQUIPMENT
INSTITUTE

341 South Patrick Street
Alexandria, VA 22314
(703) 549-7600
www.opei.org

# OPEI Standards Development Procedures

First Approved by ANSI Executive Standards Council: July 28, 2004 (Re-accreditation)
(With maintenance revisions discussed during OPEI ANSI Audit 2005, revised June 2006)
(With maintenance revisions discussed during OPEI ANSI Special Audit 2011, revised December 2011)
(Section 2.0 revised in accordance with revised Section 2.5 of ANSI Essential Requirements: Due process requirements for American National Standards, Edition: January 2013, revised February 2013)
(Section 13 added to provide for National Adoption of ISO and IEC Standards, revised February 2014)
(Section 13 inserted to add Antitrust Policy. Previous Section 13 renumbered to Section 14, revised January 2015)

# Table of Contents

1.0 GENERAL…….. ……..3

2.0 NOTIFICATION OF STANDARDS DEVELOPMENT AND COORDINATION…… 3

3.0 DEVELOPMENT OF CANVASS LIST…… 5

4.0 CONDUCT OF CANVASS…… 6

5.0 CONSIDERATION OF VIEWS AND OBJECTIONS……7

6.0 SUBMITTAL OF STANDARD……...7

7.0 APPEALS……7

8.0 REQUESTS FOR INTERPRETATION OF STANDARDS……...8

9.0 PATENT POLICY……8

10.0 METRIC POLICY…… 8

11.0 RECORDS……... 8

12.0 COMMERCIAL TERMS AND CONDITIONS……..…...9

13.0 ANTITRUST POLICY……9

14.0 ADOPTION OF AN ISO OR AN IEC STANDARD AS AN AMERICAN NATIONAL STANDARD…..... 9

# Procedures for Standards Development
# Outdoor Power Equipment Institute

## 1.0 General

These procedures describe the Outdoor Power Equipment Institute's ("OPEI") methods of developing evidence of consensus for the approval, reaffirmation, revision, or withdrawal of American National Standards. Standards committee activities shall be conducted in accordance with these procedures. Where these procedures are silent on an issue, the *ANSI Essential Requirements: Due process requirements for American National Standards* ("*ANSI Essential Requirements*") shall serve as the precedent document.

## 2.0 Notification of standards development and coordination

Notification of standards activity shall be announced in suitable media as appropriate to demonstrate the opportunity for participation by all directly and materially affected persons.

When warranted OPEI will consult any relevant international or regional guides that may impact the proposed standard and shall advise the relevant ANSI-Accredited U.S. TAG(s) if the standard is intended to be submitted for consideration as an ISO, IEC or ISO/IEC JTC-1 standard.

## 2.1 Project Initiation Notification (PINS)

At the initiation of a project to develop or revise an American National Standard, including the national adoption of ISO and IEC standards as American National Standards, but excluding actions set-forth in 2.1.1, notification shall be transmitted to ANSI using the Project Initiation Notification System (PINS) form, or its equivalent, for listing in *Standards Action*. Comments received in connection with a PINS announcement shall be handled in accordance with these procedures.

A statement shall be submitted and published as part of the PINS announcement that shall include:

(a) An explanation of the need for the project; including, if it is the case, a statement of intent to submit the standard for consideration as an ISO, IEC or ISO/IEC JTC-1 standard, and

(b) Identification of the stakeholders (e.g. telecom, consumer, medical, environmental, etc.) likely to be directly impacted by the standard.

If the response to sub-section (b) changes substantively as the standard is developed, a revised PINS shall be submitted and published.

### 2.1.1 PINS Exceptions

A PINS is not required for revisions of an American National Standard that is maintained under continuous maintenance and (1) is registered as such on the ANSI website, (2) has a notice in the standard that the standard is always open for comment and how to submit comments, and (3) has information on the developer's website that the standard is under continuous maintenance and how to submit comments. A PINS is also not required in connection with the decision to maintain an ANS under the stabilized maintenance option. A PINS form may be submitted, but is not required, at the initiation of a project to reaffirm or withdraw an American National Standard.

### 2.1.2 Assertions of conflict or duplication

If OPEI receives written comments within 30 days from the publication date of a PINS announcement in *Standards Action,* and said comments assert that a proposed standard duplicates or conflicts with an existing American National Standard or a candidate ANS that has been announced previously (or concurrently) in *Standards Action,* a mandatory deliberation of representatives from the relevant stakeholder groups shall be held within 90 days from the comment deadline. Such a deliberation shall be organized by OPEI and the commenter and shall be concluded before OPEI may submit a draft standard for public review. If the deliberation does not take place within the 90-day period and OPEI can demonstrate that it has made a good faith effort to schedule and otherwise organize it, then OPEI will be excused from compliance with this requirement. The purpose of the deliberation is to provide the relevant stakeholders with an opportunity to discuss whether there is a compelling need for the proposed standards project.

### 2.1.3 PINS Deliberation Report

The outcome of a PINS deliberation shall be conveyed in writing (the "Deliberation Report") within 30 days after the conclusion of the deliberation by OPEI to the commenter and to ANSI. Upon submission of the Deliberation Report, OPEI may continue with the submission of the draft standard for public review. If additional deliberations take place, they should not delay the submission of the draft for public review, and an updated Deliberation Report shall be conveyed within 30 days after each deliberation. Any actions agreed upon from the deliberations shall be carried out in a reasonably timely manner, but normally should not exceed 90 days following the deliberation. Subsequently, OPEI shall include all of the Deliberation Report(s) with the BSR-9 submittal to the ANSI Board of Standards Review (BSR) for consideration should the developer ultimately submit the subject standard to ANSI for approval. Stakeholders who were involved in the PINS deliberation process may also file separate Deliberation Report(s) with ANSI and OPEI within 30 days after conclusion of any deliberation for consideration by the BSR, if the standard is submitted to ANSI for approval.

In the case of ANSI Audited Designators, the Audited Designator shall provide a Deliberation Report to the commenter and to ANSI within 30 days after each deliberation. The Audited Designator shall review the results of the deliberation prior to designating a standard as an ANS.

While the outcome is not binding, unless binding provisions are agreed to by OPEI, participants are encouraged to develop a consensus on whether and how the standards development project should proceed. See also Section 4.3 – ANSI Essential Requirements; Due process requirements for American National Standards.

## 2.2 Public Review

In addition, proposals for new American National Standards and proposals to revise, reaffirm, or withdraw approval of existing American National Standards shall be transmitted to ANSI using the BSR-8 form, or its equivalent, for listing in *Standards Action* in order to provide an opportunity for public comment. If it is the case, then a statement of intent to submit the standard for consideration as an ISO, IEC or ISO/IEC JTC-1 standard shall be included as part of the description of the scope summary that is published in *Standards Action*. The comment period shall be one of the following:

- A minimum of thirty days if the full text of the revision(s) can be published in *Standards Action*;
- A minimum of forty-five days if the document is available in an electronic format,

deliverable within one day of a request, and the source (e.g., URL or an E-mail address) from which it can be obtained by the public is provided to ANSI for announcement in *Standards Action;* or

- A minimum of sixty days, if neither of the aforementioned options is applicable.

Such listing may be requested at any stage in the development of the proposal, at the option of OPEI, and may be concurrent with final balloting. However, any substantive change subsequently made in a proposed American National Standard requires listing of the change in *Standards Action*.

## 3.0 Development of canvass list

**3.1** The standards developer shall develop a list of potential canvassees consisting of those organizations, companies, government agencies, standards developers, individuals, etc., known to be, or who have indicated that they are, directly and materially affected by the standard. The standards developer shall meet the *ANSI Essential Requirements* 2.2 regarding lack of dominance and 2.3 regarding balance, assuring that no single interest category constitutes more than one-third of the membership of a consensus body dealing with safety-related standards. No individual shall represent more than one canvassee. Interest categories are:

a) general interest,
b) user and
c) producer

including but not limited to: consumer; directly-affected public; distributor or retailer; industrial/commercial; insurance; labor; manufacturer; professional society; regulatory agency; testing laboratory; or trade association.

**3.2** To determine if potential canvassees are interested in participating, the OPEI shall conduct a pre-canvass interest survey, in which the OPEI informs the potential canvassees in writing about the use of the canvass method for developing evidence of consensus, and, if the potential canvassees are interested in participating, obtains an appropriate interest category classification. OPEI's letter shall contain the title, designation, scope, description of the standard along with the history of its development, purpose and intended application of the standard, and an explanation of the ANSI function.

The time for response shall be at least thirty days from the date of the OPEI's letter and shall be so noted in the letter. All those who have agreed to participate shall be included on the canvass list, together with their agreed-upon interest categories in accordance with 2.2 and 2.3 of the *ANSI Essential Requirements*. In addition, the affiliation[1] and interest category of each member of the consensus body shall be made available to interested parties upon request.

Once an interest survey has been completed for a standard, it need not be repeated for subsequent balloting of the document. OPEI may conduct a single interest survey for a group or category of standards. A canvassee that has indicated a desire to be on the canvass list for a particular category or categories of standards shall receive the draft document(s), letter ballot(s), and any other appropriate information.

**3.3** OPEI shall remove any canvassee from the canvass list if that canvassee fails to submit

[1] Affiliation refers to the entity that the consensus body member represents (which may or may not be that person's employer). If the consensus body member is serving in an individual capacity, then the name of the individual, that person's employer and interest category should be available. Contact information is not required.

a vote in a timely manner for 4 consecutive ballots.

**3.4** Upon development of a list of potential canvassees, OPEI shall submit a BSR-8 form to ANSI to initiate the public review process.

## 4.0 Conduct of canvass

**4.1** The standards developer may begin to conduct the canvass at any time. Canvassees subsequently added to the canvass list shall have the same amount of time to respond, as do the other canvassees.

**4.2** OPEI shall transmit, at minimum, the following information to all canvassees and other interested parties so requesting unless the developer has previously supplied this information:

a) the purpose and intended application of the standard;

b) a brief history and explanation of how the standard was developed;

c) an explanation of ANSI's function and the use of the canvass method in the voluntary consensus standards system;

d) a copy of the canvass list, consisting of the name, affiliation, and category of interest of each canvassee;

e) a copy of the complete proposed American National Standard or the relevant portion under consideration when the canvassee has previously received the complete standard;

f) official letter ballot(s) to all canvassees; and

g) a method to indicate that the canvassee no longer wishes to be a voting member.

Upon request, OPEI shall provide to the canvassee a reasonable number of copies of the document being considered, to allow for a speedy determination of position by the canvassee. Should the document contain material that is not to be considered for approval as an American National Standard, such as an introduction or annex, a clear statement shall be included indicating those portions of the standard that are to be considered for approval by ANSI.

The ballot form OPEI shall provide opportunity for the canvassee to indicate its position (i.e., approval, objection (with reasons), abstention (with comment), or nonparticipation), with the advice that, in order to receive consideration, objections must be accompanied by supporting written reasons and, where possible, proposals for a solution to the problem raised. At least one follow-up shall be sent to canvassees not responding. The canvass ballot may be closed at the end of thirty days or sooner if all canvassees have responded. An extension of up to thirty days shall be granted upon request from any canvassee giving a reasonable explanation.

Those not on the canvass list that have a direct and material interest in the standard have an opportunity to participate in the review of the standard during the public review process, announced in *Standards Action*.

**4.3** Approval of a new standard, revision or reaffirmation of an existing standard, or an addendum to part or all of an existing standard shall require approval by at least a majority of the canvass list and at least two-thirds of those voting, excluding abstentions.

**4.4** Proposals for new American National Standards and proposals to revise, reaffirm, or withdraw existing American National Standards shall also be transmitted to ANSI for listing in

*Standards Action* for comment. The standards developer shall determine whether such listing shall be concurrent with the canvass and whether announcement of the proposed action in other suitable media is appropriate.

**4.5** Views and objections resulting from the canvass (4.2 and 4.3) shall be dealt with in accordance with clause 5.0.

## 5.0 Consideration of views and objections

Prompt consideration shall be given to the written views and objections of all participants, including those commenting on the PINS announcement or public comment listing in *Standards Action*.

In connection with an objection articulated during a public comment period, or submitted with a vote, an effort to resolve all expressed objections accompanied by comments related to the proposal under consideration shall be made, and each such objector shall be advised in writing (including electronic communications) of the disposition of the objection and the reasons therefore. If resolution is not achieved, each such objector shall be informed in writing that an appeals process exists within OPEI's procedures. Each objection resulting from public review or submitted by a member of the consensus body, and which is not resolved (see definition in *ANSI Essential Requirements*) must be reported to the ANSI BSR.

When this process is completed, OPEI may consider any comments received subsequent to the closing of the public review and comment period, or shall consider them in the same manner as a new proposal. Timely comments that are not related to the proposal under consideration shall be documented and considered in the same manner as submittal of a new proposal. The submitter of the comments shall be so notified.

Unresolved objections and attempt at resolution, and any substantive change made in a proposed American National Standard shall be reported to the consensus body in order to afford all members of the consensus body an opportunity to respond, reaffirm, or change their vote.

## 6.0 Submittal of standard

Upon completion of the procedures for canvass, for disposition of views and objections, and for appeals, the proposed standard may be submitted to ANSI for approval.

The information to be supplied to ANSI shall be in accordance with the submission of the BSR-9 form to ANSI PSA Department.

## 7.0 Appeals

Persons who have directly and materially affected interests, and who have been or will be adversely affected by a standard being canvassed or by the lack thereof, shall have the right to appeal any procedural actions or inactions of OPEI with regard to the development of a proposed American National Standard or the revision, reaffirmation, or withdrawal of an existing American National Standard. The burden of proof to show adverse effect shall be on the appellant.

Any appeal must be filed in writing with OPEI a copy sent to ANSI within 60 days after the date of notification of any action, or with respect to inaction. The complaint shall state the nature of the objection, the procedures or the section of the standard that are at issue, the action or inaction at issue, and the specific remedial action(s) that would satisfy the appellant's concerns.

OPEI shall provide or arrange for an appeals body composed of at least three individuals knowledgeable as to the policy or other concerns related to the appeal. Within 60 days after the receipt of the complaint, OPEI shall respond in writing to the appellant, specifically addressing each allegation in the complaint to the extent possible.

A summary of the nature of the appeal, and the decision and rationale thereof, shall be reported to the canvass list and ANSI. Appeals shall be addressed promptly and a decision made expeditiously. Consideration of appeals shall be fair and unbiased and shall fully address the concerns expressed.

## 8.0 Requests for interpretation of standards

Written inquiries requesting interpretation of the approved American National Standards shall be responded to in a reasonable time period. OPEI shall forward written requests to the appropriate standards committee chairman. Proposed interpretations shall be prepared by the chairman or any committee member with particular expertise on the subject in question. All proposed interpretations shall be approved by a majority of the appropriate standards committee. The official SDO response shall be in writing. Revisions to the standard resulting from requests for interpretations shall be processed in accordance with these procedures.

## 9.0 Patent Policy

The Standards Development Committees will strive to develop flexible performance-based standards that can with certainty be met through numerous different designs or mechanisms that are not subject to existing patent limitations. In those exceptional circumstances that a Committee must incorporate or rely on certain required design features or components then the Committee will work to ensure that the required designs or components can be readily used and applied by all affected manufactures. With regard to such circumstances, the OPEI will adhere to the ANSI Patent Policy, as described in section 3.1 of the *ANSI Essential Requirements*. Pursuant to that policy, there is no objection in principle to drafting a proposed American National Standard in terms that include the use of a patented item, if it is considered that technical reasons justify this approach.

**9.1** OPEI shall not be responsible for identifying all patents for which a license may be required for compliance with an American National Standard or for conducting inquiries into the legal validity or scope of those patents that are brought to its attention.

**9.2** Participants on standards committees, as a courtesy to the Committee, should disclose the existence of any known U.S. patents or pending U.S. patent applications for which a license may be required for compliance with the corresponding American National Standard as early in the standard development process as possible. OPEI shall solicit such disclosures during the standard development process. Disclosure of an existing U.S. patent must identify the patent holder, the patent's number, and information regarding precisely how it may relate to the standard being developed or modified.

## 10.0 Metric Policy

OPEI accepts ANSI's Metric Policy, which states, "International System of Units (SI) are the preferred units of measurement in American National Standards."

## 11.0 Records

Records shall be prepared and maintained to provide evidence of compliance with these procedures. Records concerning new, revised, or reaffirmed American National Standards

maintained under the periodic maintenance option described in 4.7.1 of the *ANSI Essential Requirements* shall be retained for one complete standards cycle, or until the standard is revised.

Records concerning actions on American National Standards, or a part of an American National Standard, maintained under the continuous maintenance option described in 4.7.2 of the *ANSI Essential Requirements*.

Records concerning withdrawals of all American National Standards shall be retained for at least five years from the date of withdrawal.

## 12.0 Commercial Terms and Conditions

Provisions involving business relations between buyer and seller such as guarantees, warranties, and other commercial terms and conditions shall not be included in an American National Standard. The appearance that a standard endorses any particular products, services or companies must be avoided. Therefore, it generally is not acceptable to include manufacturer lists, service provider lists, or similar material in the text of a standard or in an annex (or the equivalent). Where a sole source exists for essential equipment, materials or services necessary to comply with or to determine compliance with the standard, it is permissible to supply the name and address of the source in a footnote or informative annex as long as the words "or the equivalent" are added to the reference. In connection with standards that relate to the determination of whether products or services conform to one or more standards, the process or criteria for determining conformity can be standardized as long as the description of the process or criteria is limited to technical and engineering concerns and does not include what would otherwise be a commercial term.

## 13.0 Antitrust Policy

American National Standards shall be developed in accordance with applicable antitrust and competition laws and meetings amongst competitors to develop American National Standards are to be conducted in accordance with these laws.

## 14.0 Adoption of an ISO or an IEC Standard as an American National Standard

OPEI may initiate national adoption of an identical or modified version of an ISO or IEC Standard as an American National Standard. When OPEI chooses to nationally adopt an ISO or IEC standard it shall follow its accredited procedures for developing American National Standards. Procedures are set forth below for the option of following the expedited procedures when seeking to adopt an ISO or IEC standard as an identical adoption.

### 14.1 Requirements Associated with the Identical or Modified Adoption of an ISO or IEC *Standard as an American National Standard*

OPEI will clearly identify during the ANS development and submittal process that it is the intent of the standards project to adopt a specific ISO or IEC standard and provide notice in compliance with current ANSI requirements.

OPEI will designate and publish the final approved American National Standard in compliance with applicable ANSI procedures.

OPEI will comply with the *ANSI Policy Regarding Rights to Nationally Adopt IEC and ISO Standards or Otherwise Use IEC and ISO Material* and submit evidence of compliance (such

as a confirmation from the ANSI staff responsible for such contractual arrangements) as part of the formal submittal of the candidate American National Standard for approval.

### 14.2 Expedited Procedures for the Identical Adoption of an ISO or IEC standard as an American National Standard

The expedited procedures contained in this clause may be used only for the identical adoption of ISO or IEC standards for which the US TAG voted or will vote in the affirmative and for which no claims of conflict or duplication with an existing American National Standard have been made. For all other circumstances, OPEI's accredited procedures shall apply. The numerical requirements for consensus set forth in the OPEI's procedures apply.

The following provisions are applicable to the processes associated with the national adoption of identical ISO or IEC standards:

#### 14.2.1 Public notice and public review

When OPEI is proposing an identical national adoption of an ISO or IEC standard, the following apply:

a) Project Initiation Notice (PINS): The PINS provisions set-forth in the *ANSI Essential Requirements* apply. If a claim of conflict or duplication with an existing American National Standard is made, OPEI shall follow its accredited procedures and shall not utilize these expedited procedures.

b) Public Review: The public review announcement in *Standards Action* shall clearly indicate that the action pending is an identical adoption of an ISO or IEC standard. All comments received shall be provided to the consensus body for consideration in determining its position. The consensus body is not required to provide detailed responses to the comments unless a claim of conflict or duplication with an existing American National Standard is made. In that case, the OPEI shall follow its accredited procedures and shall not utilize these expedited procedures. OPEI shall inform public reviewers whether or not the identical adoption was approved for submission to ANSI.

#### 14.2.2 Minimum consensus body ballot period

OPEI, using these expedited procedures, may utilize the minimum ballot period established by OPEI's accredited procedures for American National Standards. Alternatively, the consensus body may vote to establish a ballot period that is not less than two weeks.

#### 14.2.3 Comment

OPEI shall clearly indicate to the consensus body that the ballot associated with the national adoption of an ISO or IEC standard only takes into consideration the identical adoption of the standard as an American National Standard. Thus, there is no opportunity for comment resolution unless a claim of conflict or duplication with an existing American National Standard is made. In that case, OPEI shall follow its accredited procedures and shall not utilize these expedited procedures. Any comments shall be provided to the members of the consensus body in order to provide them with the opportunity to respond, reaffirm, or change their vote within the time limits established by OPEI's accredited procedures; however, there shall be no attempt at resolution of the comments unless identical adoption under ANSI expedited procedures is abandoned and the consensus body decides to instead consider adoption (with or without national deviations) under its accredited procedures.

Comments received from either the consensus ballot or the public review period shall also be referred to the appropriate US TAG.

### 14.2.4 Notice of Action and Right to Appeal

Prior to the submittal to ANSI of a candidate American National Standard as an identical adoption following these expedited procedures, OPEI shall notify consensus body members and public commenters in writing of the intended final action on the standard and if there are unresolved objections, that an appeals process exists within the accredited procedures used by OPEI.

### 14.2.5 Approval of an ISO or IEC Standard as an American National Standard

A candidate American National Standard that is submitted as a result of the implementation of these expedited procedures shall be processed in the same manner as a standard that is submitted without objections. However, the right to appeal its approval as an ANS to ANSI is available.

### 14.2.6 Periodic Review

An ANS that is an identical adoption of an ISO or IEC standard may be reaffirmed at the same time that the corresponding ISO or IEC standard is reaffirmed by the respective organization.

If the ISO or IEC standard has been withdrawn, revised or superseded, similar action shall be considered by the OPEI within six months of the international action. If OPEI no longer has the rights under the *ANSI Policy Regarding Rights to Nationally Adopt IEC and ISO Standards or Otherwise Use IEC and ISO Material* with regard to the ISO or IEC standard, then the related ANS shall be withdrawn.