OFFICE OF THE CORONER

Washington County, Pennsylvania
S. Timothy Warco, Coroner

130313HCC1652 Exhibit A

100 W Beau Street - Suite 203
Washington, PA 15301

Telephone (724) 228-6785
Fax (724) 228-6745

Coroner's Summary Report

Incident Number: 57-5462-33503

Decedent ID:

DEMOGRAPHIC INFORMATION					
Decedent Name	(b)(3):Exemption 3 for 25(c)			Next of Kin	(b)(3):Exemption
Address				Relationship	Mother
C/S/Zip				Address	(b)(3):Exemption 3 for 25(c)
Municipality	(b)(3):Exemption 3 for 25(c)			C/S/Zip	
Date of Birth		Age	20 years	Primary Phone	
SSN	[redacted]	Sex	Female	Other Phone	
Marital Status		Race			

DATES / TIMES				LOCATION	
Incident Date	02/24/2013	Time	4:47 AM	Of Incident	Mon Valley Hospital
Found Date	02/24/2013	Time	4:24 AM	Municipality	
Coroner Notified Date	02/24/2013	Time	4:47 AM	County	Washington
Coroner Arrived Date	02/24/2013	Time	4:47 AM	Of Death	Hospital - ER/Outpatient
Pronounced Date	02/24/2013	Time	4:24 AM	Facility or Address	Monongahela Valley Hospital
Date of Death	02/24/2013	Time	4:24 AM	County	Washington

CAUSE / MANNER OF DEATH					
Primary Cause	Blunt Force Trauma of the Trunk				
Due To					
Due To					
Due To					
Manner of Death	Accidental				
Physicians					
Autopsy Date	02/24/2013	Injury at work	No	Core Temp	
Location	Washington Hospital Morgue	Transportation Injury	Yes	Rectal Temp	
Pathologist	Dr. A. Shakir/Tim M.			Ambient Temp	
Organ/Tissue Donor	No			BAC	
Procurement Org					

PRIMARY LAW ENFORCEMENT AGENCY			
Agency	Pennsylvania State Police - Belle Vernon		
Officer	Trooper Matthew Gavrish	Incident Number	

FUNERAL HOME			
Name	James C. Stump Funeral Home Inc.	Phone	724-929-7934
Address	P.O. Box 511, Belle Vernon, PA 15012-0511		

INVESTIGATOR INFORMATION			
Investigator	S. Timothy Warco	Title	Coroner

DRUGS / MEDICATIONS

Drug / Medication	Type	Date Prescribed	Physician	Dose	Regimen	# Collected

INCIDENT NARRATIVE

DECEDENT NARRATIVE

INVESIGATED AND FOUND THAT THE SAID (b)(3):Exemptio was pronounced dead at 4:47 A.M. on February 24, 2013 in Monongahela Valley Hospital, Carroll Township, County of Washington, Pennsylvania.

The Coroner's Office was notified by Monongahela Valley ER regarding the death of a 20-year-old female that was found unresponsive as a result of a Utility Vehicle Accident.

Victim was a passanger in a "rhino" utility vehicle riding in a wooded area. The driver of the vehicle lost control going up a steep hill and the vehicle flipped over. The victim was thrown from the vehicle and complained of ankle and back pain. Victim was then taken to a friend's house when she went unconscious. CPR was attempted by friends. Victim vomited but remained unconscious. Transported to Mon Valley E.R. and pronounced. Victim had been partying with friends and had consumed alcohol and used marijuana.

Under investigation by P.S.P Trooper Matthew Gavrish, Belle Vernon Barracks.

Transported by Deputy Coroner Tim Kegel to the Washington Hospital Morgue.
Under custody of Coroner Warco at the Washington Hospital Morgue.

VERDICT: DEATH WAS ATTRIBUTED TO Blunt Force Trauma to Trunk. (MANNER: Accidental)

U.S. Consumer Product Safety Commission

Task Number: 130313HCC1652

Date: 03/13/2013

Status of Missing Document(s)

The official records below were requested for this investigation report, but could not be obtained:

1. Pennsylvania State Police Report--pending
2. Washington County Autopsy report--pending Addendum added 4/11/2013
3.
4.
5.
6.

130313HCC1652

Contact List:

Captain Scott C. Price
Director, Operational Records Division
Pennsylvania State Police
Bureau of Records & Identification
1800 Elmerton Ave.
Harrisburg, PA 17110
Date of contact: March 14, 2013

Washington County Coroner's Office
100 W. Beau St., Suite 203
Washington, PA 15301
Ph: (724) 228-6785
Fx: (724) 228-6745
Date of contact: March 14, 2013

Trooper Matthew Gavrish
Pennsylvania State Police
560 Circle Drive
Belle Vernon, PA 15012-9654
724-929-6262 (P)
Date of contact: March 18, 2013

130313HCC1652 Exhibit E

OFFICE OF THE CORONER

Washington County, Pennsylvania

S. TIMOTHY WARCO
CORONER
TELEPHONE
(724) 228-6785
FAX
(724) 228-6745

ANTHONY J. SENECA
SOLICITOR

100 West Beau Street, Suite 203
Washington, Pennsylvania 15301

FACSIMILE TRANSMISSION

DATE: 4-9-13

TO: Marc Bernstein, Investigator

COMPANY: Consumer Product Safety Commission - CFIE Office

PHONE NO: (724) 591-5352

REFERENCE: Request for Reports - (b)(3):Exemption 3 for 25(c)

FAX NO: (866) 790-0002

ADDRESS: WASHINGTON COUNTY CORONER
100 WEST BEAU ST.-SUITE 203
WASHINGTON, PA 15301

PHONE: (724) 228-6785

FAX: (724) 228-6745

17 PAGES INCLUDING THIS COVER SHEET

PLEASE ADVISE IMMEDIATELY IF TRANSMISSION IS INCOMPLETE.

REMARKS:

UNITED STATES GOVERNMENT
Consumer Product Safety Commission-CFIE Office
111 Grand Ave. P.O. Box #834
Mars, PA 16046-9800
Phone 724-591-5352 & Fax 866-790-0002
mbernstein@cpsc.gov

130313HCC1652 Exhibit E

March 14, 2013

Washington County Coroner's Office
100 W. Beau St., Suite 203
Washington, PA 15301

Dear Jean:

The U.S. Consumer Product Safety Commission, a federal regulatory agency, is investigating the following incident:

Victim: (b)(3):Exemption 3

Date of incident: **02/24/2013**

Location: **New Hill Rd., Redstone Township**

Incident: **UTV incident**

Incident number: **Unknown**

Please send a copy of the complete coroner's and autopsy reports concerning this case, including the autopsy report and the investigation report. I understand that the fee for the report is waived for federal agencies.

The Commission's interest in this case is that we are conducting an ongoing study of incidents involving consumer products in order to determine if additional safety standards need to be addressed. The information obtained will be used for the official business of the Commission.

If you have any questions, do not hesitate to call me. Thank you for your assistance.

Please forward report(s) via fax or email as noted above.

Sincerely,

Marc Bernstein,
Investigator

OFFICE OF THE CORONER

130313HCC1652 Exhibit E

Washington County, Pennsylvania

S. TIMOTHY WARCO
CORONER
TELEPHONE
(724) 228-6785
FAX
(724) 228-6745

ANTHONY J. SENECA
SOLICITOR

Via fax

100 West Beau Street, Suite 203
Washington, Pennsylvania 15301

April 9, 2013

United States Government
Consumer Product Safety Commission-CFIE Office
111 Grand Ave., P.O. Box #834
Mars, PA 16046-9800

Attention: Marc Gernstein,
Investigator

Gentlemen:

Reference: (b)(3):Exemptio, Deceased
February 24, 2013, Date of Death

As requested in your letter dated March 14, 2013, please find enclosed the Coroner's Report and Autopsy Report on the above referenced deceased.

I trust this is in accordance with your request.

Very truly yours,

S. Timothy Warco

S. Timothy Warco
Coroner

STW/jla

OFFICE OF THE CORONER

130313HCC1652 Exhibit E

Washington County, Pennsylvania

S. TIMOTHY WARCO
CORONER
TELEPHONE
(724) 228-6785
FAX
(724) 228-6745

ANTHONY J. SENECA
SOLICITOR

100 West Beau Street, Suite 203
Washington, Pennsylvania 15301

Deceased: (b)(3):Exemption 3 for 25 Case No.: WIL13-015
Age: 20yrs Race: White Sex: Female
Date of Autopsy: 24 Feb 13 3:00 PM

ANATOMIC DIAGNOSES:

I. BLUNT FORCE TRAUMA OF THE TRUNK:
- A. Contusions of the right flank
- B. Laceration of the mesentery
- C. Laceration of the peritonium, posteriorly
- D. Herniation of loops of the small intestine to the retroperitoneal area
- E. Laceration of the left renal artery
- F. Retroperitoneal hemorrhage extensive
- G. Hemoperitoneum, 500 cc

II. POSTMORTEM TOXICOLOGY:
- A. Blood Alcohol Concentration: 0.082%
- B. Oxycodone Free blood level: 14 ng/ml
- C. Delta 9THC blood level: 5.3 ng/ml
- D. Delta 9 Carboxy THC: 17 ng/ml

OPINION:

(b)(3):Exemption 3 for 25, a 20 year old white female, died as a result of blunt force trauma of the abdomen.

MANNER OF DEATH: Accidental

A. Shakir, M.D., Forensic Pathologist

CORONER'S COPY

S. Timothy Warco, Coroner
amm

AUTOPSY REPORT

NARRATIVE SUMMARY:

The autopsy was performed on February 24, 2013, at 3:00 P.M., at Washington Hospital, pursuant to the request and authorization of S. Timothy Warco, Coroner, County of Washington

A. Shakir, M.D., Forensic Pathologist, Prosector

T. Manzewitsch, Autopsy Technician

In attendance from the commencement of the autopsy was Pennsylvania State Police Trooper Morrison

S. Timothy Warco, Coroner, was present and participated during the autopsy

EXTERNAL EXAMINATION:

The body is that of a well developed, adequately nourished white female, weighing approximately 170 pounds, measuring 64 inches, and appearing to be the stated age of 20 years.

The body is unembalmed.

The body is clad in orange/green underpants. The following articles of wearing apparel brought in with the body:

1. Blue jeans with a brown belt
2. Pink thermal underwear bottom
3. White socks
4. Camouflage hiking boots

AUTOPSY REPORT

The clothing is cut previously and partially soiled with dirt. A white metal ear stud is noted on the right ear.

The temperature of the body is cold to the touch. Rigor mortis is well developed and present to an equal extent in all joints. Purple, non-fixed, marked livor mortis is evident over the posterior parts of the body, except in areas exposed to pressure, where it is absent. The skin is clean, pale and dry.

The head is normocephalic.

The head and face exhibit no trauma. The head hair is brown and of a medium length. The eyes are brown with pale conjunctivae. The corneae and lenses are transparent. No petechial hemorrhages are noted in the conjunctivae. The pupils are regular, round, equal, central and measure 0.4 cm in diameter. The ears and external auditory canals are unremarkable. The skeleton of the nose is intact and no foreign material is present in the nostrils. No foreign material is present in the oral cavity. The upper and lower teeth are natural and in a good state of dental repair. The lips, oral mucosa and tongue reveal no evidence trauma.

The neck is symmetrical and unremarkable. No increased mobility on manipulation is detected.

The shoulders are symmetrical.

The chest is symmetrical and unremarkable.

AUTOPSY REPORT

The abdomen is bulging and no masses can be palpable through the abdominal wall.

The back is symmetrical and unremarkable.

The external genitalia and the anus are unremarkable. No injuries of the upper thighs, perineum, vagina and anus are detected. No foreign bodies or hemorrhages are noted in either the vaginal or anal canals.

The extremities are symmetrical and exhibit trauma, which will be described below. The fingernails are regular, covered by synthetic nails, long, painted and unremarkable. The toenails are clean, short, painted red and unremarkable. Pitting edema is not present in the ankles or legs. The soles of the feet are clean and unremarkable.

Manipulation of the neck, shoulders, elbows, wrists, fingers, hips, knees and ankles fails to elicit any bony crepitus or abnormal motion.

The body shows the following evidence of recent physical injury:

1. A 35 x 15 cm purple contusion is noted on the right flank extending to the right side of the abdomen and back.
2. A 5 cm red abrasion is noted in the suprapubic area.
3. A 15 x 5 cm purple contusion is noted antero-lateral of

the left hip region.

4. An ill-defined swelling and purple contusion is noted on the right ankle/foot region.

Evidence of recent medical/surgical treatment:

1. There is an endotracheal tube entering the oral cavity.
2. There are adhesive electrocardiogram electrodes on the chest.
3. There is an intravenous catheter in the right forearm.
4. There are needle puncture marks in the left side of the neck.
5. There is an intraosseous cannula in the left tibia.

Other identifying features:

Tattoos are noted on the lower back, right scapular region and both feet.

No fresh needle marks or punctiform scars are noted in either antecubital fossa, interphalangeal spaces of the hands or feet, under the tongue or on the gums.

AUTOPSY REPORT

INTERNAL EXAMINATION:

BODY CAVITIES:

The body is opened by a "Y" shaped incision. The abdominal fat pad is 4.0 cm thick at the umbilicus. The muscles of the chest and abdominal wall are normal in color and consistency. The ribs, sternum and spine exhibit fractures of the 2nd through 5th ribs anteriorly on both sides with minimal surrounding hematoma. Fractures of the right 11th and 12th ribs medially are noted surrounding by hemorrhage. The pleurae are smooth. Each pleural cavity is moist. The domes of the diaphragm are normally positioned. The peritoneum is smooth and thin. The peritoneal cavity contains about 500 cc of blood. The liver and spleen do not extend below the costal margins. The bladder lies below the symphysis pubis. The organs of the pleural and peritoneal cavities are in their usual positions in situ. The mesentery and omentum show lacerated mesentery. The pulmonary artery is opened in situ and no emboli are seen.

At this time representative samples of blood is taken for toxicological examination.

CARDIOVASCULAR SYSTEM:

The heart weighs 350 grams. The pericardium is thin, smooth and moist. The epicardial surface is smooth. There is moderate amount of epicardial fat. The external configuration of the heart

AUTOPSY REPORT

is unremarkable. The chambers of the heart are of normal size. The right and left ventricles are unremarkable. The endocardium and valve leaflets are smooth, transparent and exhibit no thrombi, vegetations or fibrosis. The circumferences of the valves are as follows: tricuspid: 12.0 cm, pulmonic: 6.5 cm, mitral: 8.0 cm and aortic: 6.5 cm. The trabeculae carneae and papillary muscles are unremarkable. The chordae tendineae are usual. The right ventricle is 0.3 cm thick, and the left ventricle is 1.4 cm thick. The septum is 1.5 cm thick. The coronary arteries have their usual distribution with a right predominance. The right and left coronary ostia are normal in patency. On sectioning, the coronary arteries display no significant degree of atherosclerosis or other pathological abnormality. The myocardium is of the usual consistency, red-brown and grossly homogeneous.

The aorta is lined by a smooth, tannish-yellow endothelium and is unremarkable.

The bifurcation of the iliacs is patent.

The venae cavae are unremarkable.

RESPIRATORY SYSTEM:

The right lung weighs 350 grams, and the left lung weighs 280 grams. The tracheal mucosa is unremarkable. The pleurae are smooth, delicate and glistening. The lungs are not distended and

are variegated pink-gray to dark purple. The lung parenchyma is of the usual consistency and mottled with a slight amount of anthracotic pigment. The lung tissue is mildly congested and edematous. No purulent exudate is expressed from the parenchyma on compression. No nodularity and no focal or diffuse lesions are seen.

The extra and intra-pulmonary bronchi are opened longitudinally, patent and contain white frothy fluid. The pulmonary arteries and veins exhibit no pathological change. The hilar and mediastinal lymph nodes are unremarkable.

HEPATOBILIARY SYSTEM:

The liver weighs 1930 grams. The capsule of Glisson is transparent. The external surface is smooth, glistening and brown. The borders are sharp. The parenchyma is of the usual consistency and brown with the usual lobular architecture and no focal or diffuse lesions.

The gallbladder has delicate walls, and contains a few cc of yellow-brown viscid bile and has a smooth mucosa. No stones are present.

The intra and extra-hepatic biliary ducts are patent. The hepatic and portal veins and the hepatic artery are unremarkable.

HEMOLYMPHATIC SYSTEM:

The spleen weighs 240 grams and is of usual consistency. The

AUTOPSY REPORT

capsule is glistening and thin. The internal architecture is clearly defined. The parenchyma is homogeneous.

There are no enlarged lymph nodes identified.

GASTROINTESTINAL SYSTEM:

The esophagus is empty and unremarkable. The stomach contains about 100 cc of fluid and partially digested food unrecognized to its type. There are no pills or capsules in the stomach. The stomach mucosa is pale with the usual rugal folds. The mesentery shows a 14 cm long tear. Loops of the small intestine are herniated through laceration of the posterior peritoneal wall on both sides of the lumbar vertebrae.

The vermiform appendix is identified.

The retroperitoneum show extensive lacerations involving the muscles of both sides of the lumbar vertebrae. Interstitial hemorrhage is noted on both sides of the vertebral column.

PANCREAS:

The pancreas weighs 160 grams. The parenchyma is tan and homogeneous.

UROGENITAL SYSTEM:

The kidneys are in the usual position and without malformation. The right kidney weighs 120 grams, and the left kidney weighs 160 grams. The surfaces are smooth and glistening. The capsules strip

easily, revealing a red-brown surface. The cortico-medullary junctions are well defined. The renal papillae have no hemorrhage or necrosis. The calyceal and collecting systems are not remarkable. The left renal artery and vein show laceration of the artery after its commencement from the aorta. The laceration is partially contained by the surrounding soft tissue that is hemorrhagic.

The ureters are not dilated or obstructed.

The bladder is empty. The bladder exhibits the usual tannish-pink mucosa with no focal lesions. The ureteral orifices are patent.

The vaginal canal is patent. The cervix is not remarkable. The uterus is not enlarged and is of the usual shape. The endometrial and endocervical cavities are not remarkable. The myometrium is uniform. The adnexae are not remarkable.

ADRENALS:

Both adrenals are of usual size and shape. The cut surface shows a thin yellow cortex and brown-gray medulla.

MUSCULOSKELETAL SYSTEM:

The muscles are well developed and of the usual color and consistency. No fractures, dislocations, compressions or hemorrhages are noted upon examination of the spine. The vertebral

bodies are not remarkable. No hemorrhages are noted in the paravertebral muscles. The sternum, ribs and spine exhibit the usual bone density and marrow.

NECK:

The soft tissues of the neck, the thyroid and cricoid cartilages, larynx, and the hyoid bone show no hemorrhages or evidence of traumatic injury. The thyroid gland weighs 25 grams. The parenchyma is pinkish-brown and homogeneous. The laryngeal mucosa is pink and smooth with no focal lesions. There are no paratracheal hemorrhages or masses. There is no food, vomitus or foreign material in the upper airway. The epiglottis and vocal cords are unremarkable. The neck has been examined at the conclusion of the autopsy, after the blood has drained and the tissues are dry.

CENTRAL NERVOUS SYSTEM:

The scalp is reflected from mastoid process to mastoid process, revealing no trauma. The calvarium is intact and when removed, there is no evidence of epidural or subdural hemorrhages. The dura mater is white, smooth and does not exhibit any stains or discolorations. The leptomeninges are not remarkable.

The brain weighs 1350 grams and is of usual consistency. The gyri occupy their usual position and the sulci exhibit a normal depth. The blood vessels at the base do not reveal any aneurysms,

AUTOPSY REPORT

arteriovenous malformations or atherosclerosis. The cranial nerves are grossly unremarkable. The cerebral and cerebellar hemispheres are symmetrical and the surface does not display any scar tissue. The ventricles contain the usual amount of colorless cerebrospinal fluid. The cerebellar tonsils are not herniated. The left and right unci and hippocampus are not herniated. Multiple sections through the cerebrum, cerebellum, pons, midbrain and medulla exhibit the usual internal pattern with no focal or diffuse lesions.

The pituitary gland is unremarkable.

The dura covering the vault and the base of the cranium is removed.

The basilar skull is intact.

Atlanto-occipital articulation is intact. The odontoid process shows no fractures or dislocations. The cervical spine appears to be intact.

130313HCC1652 Exhibit E

OFFICE OF THE CORONER

Washington County, Pennsylvania

S. Timothy Warco, Coroner

100 W Beau Street - Suite 203
Washington, PA 15301

Telephone (724) 228-6785
Fax (724) 228-6745

Coroner's Summary Report

Incident Number: 57-5462-33503

Decedent ID:

DEMOGRAPHIC INFORMATION

Decedent Name	(b)(3):Exemption 3 for 25(c)			Next of Kin	(b)(3):Exemption
Address				Relationship	Mother
C/S/Zip				Address	(b)(3):Exemption 3 for 25(c)
Municipality				C/S/Zip	
Date of Birth	(b)(3):Exemption	Age	20 years	Primary Phone	
SSN	[redacted]	Sex	Female	Other Phone	
Marital Status		Race			

DATES / TIMES				LOCATION	
Incident Date	02/24/2013	Time	4:47 AM	Of Incident	Mon Valley Hospital
Found Date	02/24/2013	Time	4:24 AM	Municipality	
Coroner Notified Date	02/24/2013	Time	4:47 AM	County	Washington
Coroner Arrived Date	02/24/2013	Time	4:47 AM	Of Death	Hospital - ER/Outpatient
Pronounced Date	02/24/2013	Time	4:24 AM	Facility or Address	Monongahela Valley Hospital
Date of Death	02/24/2013	Time	4:24 AM	County	Washington

CAUSE / MANNER OF DEATH

Primary Cause	Blunt Force Trauma of the Trunk				
Due To					
Due To					
Due To					
Manner of Death	Accidental				
Physicians					
Autopsy Date	02/24/2013	Injury at work	No	Core Temp	
Location	Washington Hospital Morgue	Transportation Injury	Yes	Rectal Temp	
Pathologist	Dr. A. Shakir/Tim M.			Ambient Temp	
Organ/Tissue Donor	No			BAC	
Procurement Org					

PRIMARY LAW ENFORCEMENT AGENCY

Agency	Pennsylvania State Police - Belle Vernon		
Officer	Trooper Matthew Gavrish	Incident Number	

FUNERAL HOME

Name	James C. Stump Funeral Home Inc.	Phone	724-929-7934
Address	P.O. Box 511, Belle Vernon, PA 15012-0511		

INVESTIGATOR INFORMATION

Investigator	S. Timothy Warco	Title	Coroner

CORONER'S COPY

Incident Number: 57-5462-33503

130313HCC1652 Exhibit E

Decedent ID:

INCIDENT NARRATIVE

DECEDENT NARRATIVE

INVESIGATED AND FOUND THAT THE SAID (b) was pronounced dead at 4:47 A.M. on February 24, 2013 in Monongahela Valley Hospital, Carroll Township, County of Washington, Pennsylvania.

The Coroner's Office was notified by Monongahela Valley ER regarding the death of a 20-year-old female that was found unresponsive as a result of a Utility Vehicle Accident.

Victim was a passanger in a "rhino" utility vehicle riding in a wooded area. The driver of the vehicle lost control going up a steep hill and the vehicle flipped over. The victim was thrown from the vehicle and complained of ankle and back pain. Victim was then taken to a friend's house when she went unconscious. CPR was attempted by friends. Victim vomited but remained unconscious. Transported to Mon Valley E.R. and pronounced. Victim had been partying with friends and had consumed alcohol and used marijuana.

Under investigation by P.S.P Trooper Matthew Gavrish, Belle Vernon Barracks.

Transported by Deputy Coroner Tim Kegel to the Washington Hospital Morgue.
Under custody of Coroner Warco at the Washington Hospital Morgue.

VERDICT: DEATH WAS ATTRIBUTED TO Blunt Force Trauma to Trunk. (MANNER: Accidental)

IDI #: 130313HCC1652

Exhibit #: D

Utility Vehicle Data Record Sheet

Front

A Driver	B Right Front Passenger
Left Rear Passenger	Right Rear Passenger
C	D, E

Cargo Bed

Rear

The Utility Vehicle

A:		
Age: 30	Height: Unknown	
Gender: M	Weight: Unknown	
Helmet (Y/N): N	Seatbelt (Y/N): Y	
Killed/Injured/Neither/Unknown: No injury		
Injury Description: None		
Did vehicle land on victim: No		
Ejected (Either partially or fully): No		

B:		
Age: 27	Height: Unknown	
Gender: F	Weight: Unknown	
Helmet (Y/N): N	Seatbelt (Y/N): Y	
Killed/Injured/Neither/Unknown: No injury		
Injury Description: None		
Did vehicle land on victim: No		
Ejected (Either partially or fully): No		

C:		
Age: 20	Height: Unknown	
Gender: F	Weight: Unknown	
Helmet (Y/N): N	Seatbelt (Y/N): N	
Killed/Injured/Neither/Unknown: Killed		
Injury Description: Blunt force trauma		
Did vehicle land on victim: No		
Ejected (Either partially or fully): Unknown		

D:		
Age: 16	Height: Unknown	
Gender: M	Weight: Unknown	
Helmet (Y/N): N	Seatbelt (Y/N): N	
Killed/Injured/Neither/Unknown: No injury		
Injury Description: None		
Did vehicle land on victim: No		
Ejected (Either partially or fully): No		

E:		
Age: 17	Height: Unknown	
Gender: M	Weight: Unknown	
Helmet (Y/N): N	Seatbelt (Y/N): N	
Killed/Injured/Neither/Unknown: No injury		
Injury Description: None		
Did vehicle land on victim: No		
Ejected (Either partially or fully): No		

F:		
Age:	Height:	
Gender:	Weight:	
Helmet (Y/N):	Seatbelt (Y/N):	
Killed/Injured/Neither/Unknown:		
Injury Description:		
Did vehicle land on victim:		
Ejected (Either partially or fully):		

*If victim(s) were injured/killed, please include the other relevant information requested in the assignment message in the text of the IDI

Using the figure on the left, please fill in where the occupants were in the vehicle at the time of the incident using A, B, C, etc. to identify the occupant(s)' location. Fill in the occupants' characteristics in the corresponding location on the right. For example, the driver could be assigned to the letter 'A' and the letter 'A' would be placed in the diagram in the box designated 'Driver', and the drivers' characteristics would be filled on the right. If there were more than six occupants (or more room is needed), please add the other passenger(s)' information (or any other information) as needed. If information is not available, please indicate by 'na'.

Note: Not all locations indicated on the diagram exist in all types of utility vehicles. Please only use the locations that correspond to the incident vehicle. Please place an 'X' over the area if the vehicle was not equipped with the component.

Save

EPIDEMIOLOGIC INVESTIGATION REPORT

1. Task Number	2. Investigator's ID	
130320HNE0001	2773	

3. Office Code	4. Date of Accident YR MO DAY	5. Date Initiated YR MO DAY
810	2013 03 19	2013 04 15

6. Synopsis of Accident or Complaint **UPC**

A six year old male and two passengers were ejected from the utility vehicle he was driving after it went over a bump in a pasture. The UTV rolled over and landed on top of the six year old. He was pronounced deceased at the hospital. The passengers received minor injuries. The victim was wearing a seatbelt. It is unknown if the passengers were wearing seatbelts. It is also unknown if all three riders were wearing helmets.

7. Location (Home, School, etc)	8. City	9. State
2 - FARM	ALMA	AR

10A. First Product	10B. Trade/Brand Name	10C. Model Number
5044 - UTILITY VEHICLES	POLARIS RANGER	UNKNOWN

10D. Manufacturer Name and Address
POLARIS INDUSTRIES INC.
2100 HIGHWAY 55
MEDINA, MN 55340

11A. Second Product	11B. Trade/Brand Name	11C. Model Number
0	NONE	NONE

11D. Manufacturer Name and Address
NONE

12A. Hispanic or Latino	12B. Race	12C. Race Source
2 - No	1 - White Other:	2 - Respondent-Other

13. Age of Victim	14. Sex	15. Disposition	16. Injury Diagnosis
6	1 - Male	8 - Death	54 - Crushing

17. Body Part(s) Involved	18. Respondent	19. Type of Investigation	20. Time Spent (Operational / Travel)
87 - N.S./UNK	3 - 2nd Hand Info Only	2 - Telephone	9.00 / 0.00

21. Attachment(s)	22. Case Source	23. Sample Collection Number
9 - Multiple Attachments	05 - Newspaper	

24. Permission to Disclose Name (Non NEISS Cases Only)

○ Yes ◉ No ○ Yes for Manuf. Only ○ Verbal ○ Written

25. Review Date	26. Reviewed By	27. Regional Office Director
06/24/2013	8978	Dennis R. Blasius

28. Distribution	29. Source Document Number
John C. Topping; Tanya L. Topka	X1331093A

This investigation was initiated in response to a news article obtained by the CPSC. The article indicated that a 6 year old male died after an All-Terrain Vehicle (ATV) flipped and landed on top of him. This investigation revealed that the incident involved a utility vehicle. Official reports were requested from the sheriff's office, fire department, Emergency Management Services (EMS) and the coroner's office. EMS required parental consent in order to release their report. No official reports could be obtained. (See Attachment 2 for missing documents form) Attempts to reach the next of kin were not successful. Information for this report was obtained from telephone contact with the fire department and sheriff's office.

The victim was born on March 24, 2006. According to fire department personnel, they responded to the scene of a four wheeler incident on the evening of March 19, 2013. The incident utility vehicle (UTV) was being driven by a 6 year old male. The victim's father and another passenger were also riding in the vehicle. The victim was wearing a seatbelt. It is unknown if the passengers were wearing seatbelts. It is also unknown if helmets were worn by any of the riders. (See Attachment 3 for data record sheet for UTV's)

Reportedly, the victim was driving the UTV in a pasture. It went over a large bump, rolled over and ejected all three riders. The UTV landed on top of the victim. The passengers received minor injuries. EMS responded to the scene and transported the victim to the hospital where he was pronounced deceased. It is unknown if an autopsy was performed.

PRODUCT IDENTIFICATION:

The product involved in this incident is a four wheeled Polaris Ranger utility vehicle, model # unknown. The manufacturer is Polaris Industries, 2100 Highway 55, Medina, MN 55340, phone #888-704-5290.

No additional information could be obtained.

ATTACHMENTS:

1. Contact List
2. Missing Documents
3. Data Record Sheet-utility vehicles

Crawford County Sheriff's Office
Records Department
409 Main St.
Van Buren, AR 72957
479-474-2581
Date Initiated: 4/15/2013

Crawford County Coroner
Pam Wells, Coroner
300 Main St.
Van Buren, AR 72956
479-806-5959
Date Initiated: 4/16/2013

Southwest EMS, Inc.
Billing Department
Mena, AR
877-760-5400
Date Initiated: 4/30/2013

Crawford County Rural Fire Department
Mr. Garcia
Alma, AR
479-883-7384
Date Initiated: 4/16/2013

[redacted]-victims parents
[redacted]
Date Initiated: 6/4/2013

U.S. Consumer Product Safety Commission

Task Number: _130320HNE0001_____

Date: _6/18/2013_____

Status of Missing Document(s)

The official records below were requested for this investigation report, but could not be obtained:

1. __Medical Examiner's Report-request letter attached_____

2. __Sheriff's Report-request letter attached_____

3. __EMS Report_____

4. ___Fire Report_____

5. _____

6. _____

U. S. CONSUMER PRODUCT SAFETY COMMISSION
P.O. [redacted]
Tel: [redacted]
Email: [redacted]

April 16, 2013

Crawford County Coroner
Pam Wells, Coroner
300 Main St.
Van Buren, AR 72956

Dear Supervisor of Records,

The U.S. Consumer Product Safety Commission, a federal regulatory agency, is investigating the following incident:

Victim: 6 year old male
Date of Incident: 3/19/2013
Location: [redacted]
Incident: ATV/UTV fatality
Report number: Unknown

On behalf of the Commission, I am requesting a copy of your coroner's report for this incident, along with any available supplemental report. I understand the fee for federal agencies is waived.

The Commission's interest in the case is that we are conducting an ongoing study of All-Terrain Vehicle deaths in order to determine if additional safety standards need to be addressed. CPSC has jurisdiction over ATV's under the Consumer Product Safety Act Section 15 (b). The information obtained will be used for the official business of the Commission, and the identity of the victim will remain confidential.

CPSC investigative staff are authorized to collect information such as law enforcement reports from state and local officials under Section 29 of the Consumer Product Safety Act, 15 USC §2078. Under Section 25(c) of the CPSA, 15 USC §2075(c), we safeguard information identifying victims. Further, the CPSC has the authority to withhold certain kinds of investigative files from requesters under the Freedom of Information Act.

If you have any questions, do not hesitate to call me. Thank you for your assistance.

[redacted]
Product Safety Investigator

U. S. CONSUMER PRODUCT SAFETY COMMISSION
P.O. [redacted]
Tel: [redacted]
Email: [redacted]

April 15, 2013

Crawford County Sheriff's Office
Records Department
409 Main St.
Van Buren, AR 72957

Dear Supervisor of Records:

The U.S. Consumer Product Safety Commission, a federal regulatory agency, is investigating the following incident:

Victim: 6 year old male
Date of Incident: 3/19/2013
Location: [redacted]
Incident: ATV/UTV roll-over
Report number: Unknown

On behalf of the Commission, I am requesting a copy of your sheriff's report for the incident, along with any available supplemental report. We would also like to obtain photographs of the incident area, if available. Please note that a photo CD is preferred over hard copy photographs. I understand the fee for federal agencies is waived.

The Commission's interest in the case is that we are conducting an ongoing study of All-Terrain Vehicle related deaths in order to determine if additional safety standards need to be addressed. CPSC has jurisdiction over All-Terrain Vehicles under the Consumer Product Safety Act Section 15 (b). The information obtained will be used for the official business of the Commission, and the identity of the victim will remain confidential.

CPSC investigative staff are authorized to collect information such as law enforcement reports from state and local officials under Section 29 of the Consumer Product Safety Act, 15 USC §2078. Under Section 25(c) of the CPSA, 15 USC §2075(c), we safeguard information identifying victims. Further, the CPSC has the authority to withhold certain kinds of investigative files from requesters under the Freedom of Information Act.

If you have any questions, do not hesitate to call me. Thank you for your assistance.

[redacted]

Product Safety Investigator

IDI #: 130320HNE0001
Exhibit #: 3

Utility Vehicle Data Record Sheet

Front

A Driver	B, C Right Front Passenger
unk Left Rear Passenger	unk Right Rear Passenger
unk	unk

Cargo Bed

Rear

The Utility Vehicle

A:		
Age: 6	Height: unk	
Gender: M	Weight: unk	
Helmet (Y/N): unk	Seatbelt (Y/N): Y	
Killed/Injured/Neither/Unknown: Killed		
Injury Description: crushed		
Did vehicle land on victim: Yes		
Ejected (Either partially or fully): Yes		

B:		
Age: unk	Height: unk	
Gender: M	Weight: unk	
Helmet (Y/N): unk	Seatbelt (Y/N): unk	
Killed/Injured/Neither/Unknown: Injured		
Injury Description: minor injury		
Did vehicle land on victim: no		
Ejected (Either partially or fully): fully		

C:		
Age: unk	Height: unk	
Gender: unk	Weight: unk	
Helmet (Y/N): unk	Seatbelt (Y/N): unk	
Killed/Injured/Neither/Unknown: Injured		
Injury Description: minor injury		
Did vehicle land on victim: no		
Ejected (Either partially or fully): fully		

D:		
Age:	Height:	
Gender:	Weight:	
Helmet (Y/N):	Seatbelt (Y/N):	
Killed/Injured/Neither/Unknown:		
Injury Description:		
Did vehicle land on victim:		
Ejected (Either partially or fully):		

E:		
Age:	Height:	
Gender:	Weight:	
Helmet (Y/N):	Seatbelt (Y/N):	
Killed/Injured/Neither/Unknown:		
Injury Description:		
Did vehicle land on victim:		
Ejected (Either partially or fully):		

F:		
Age:	Height:	
Gender:	Weight:	
Helmet (Y/N):	Seatbelt (Y/N):	
Killed/Injured/Neither/Unknown:		
Injury Description:		
Did vehicle land on victim:		
Ejected (Either partially or fully):		

*If victim(s) were injured/killed, please include the other relevant information requested in the assignment message in the text of the IDI

Using the figure on the left, please fill in where the occupants were in the vehicle at the time of the incident using A, B, C, etc. to identify the occupant(s)' location. Fill in the occupants' characteristics in the corresponding location on the right. For example, the driver could be assigned to the letter 'A' and the letter 'A' would be placed in the diagram in the box designated 'Driver', and the drivers' characteristics would be filled on the right. If there were more than six occupants (or more room is needed), please add the other passenger(s)' information (or any other information) as needed. If information is not available, please indicate by 'na'.

Note: Not all locations indicated on the diagram exist in all types of utility vehicles. Please only use the locations that correspond to the incident vehicle. Please place an 'X' over the area if the vehicle was not equipped with the component.

Save

IDI #: 130320HNE0001
Exhibit #:

Task Number 130320HNE0001

INTERVIEWER: When the response to a particular question is unknown, please leave blank.

Type of respondent:

Other, specify:

1. What type of vehicle was involved in the incident? (If vehicle is not an ATV, or if ATV has more than 4 wheels, politely thank respondent for her/his cooperation and terminate interview).

1. - 3 wheeled ATV
2. - 4 wheeled ATV
3. - ATV with unknown number of wheels
4. - 2 wheeled motorcycle
5. - Dune Buggy
6. - ATV with more than 4 wheels
✔7. - Utility Vehicle
8. - Other Vehicle
0. - Unknown

2. What is the manufacturer/brand name of the ATV(s) involved in the incident? If more than two ATVs, use an additional sheet.

ATV #1	ATV #2
Manufacturer:	**Manufacturer:**

3. What is the model name or number and/or vehicle identification number (VIN) of the ATV?

Model: / **VIN:**

4. What is the model year of the ATV? (Record last two digits of model year. For example 89,90).

Model Year:

5. What is the engine size (in CCs) of the ATV?

Engine Size:

6. Was there more than one death involved in this incident? If more than two individuals were killed use an additional sheet.

	Death #1	Death #2
Date of Death:	03/19/2013	
Age/Sex:	6 / 1 - Male	/
State of Death:		
City of Death:		
County of Death:		
Race:		
Race Other:		
Hispanic/Latino:		

7. Was the victim wearing a helmet at the time the incident occurred?

Death #1	Death #2
Yes No Unknown	Yes No Unknown

Task Number: 130320HNE0001

8. Describe how the incident occurred. (Use additional sheets if necessary).

A five year old male and two passengers were ejected from the utility vehicle he was driving after it went over a bump in a pasture. The UTV rolled over and landed on top of the five year old. He wasproncounced deceased at the hospital. The passengers received minor injuries. The victim was wearinga seatbelt. It is unknown if the passengers were wearing seatbelts. It is also unknown if all threeriders were wearing helmets.

9. Did the ATV overturn/tipover/rollover?

10. If ATV overturned/tipped over/rolled over, did it land on the victim?

Victim 1: Yes No Unknown

Victim 2: Yes No Unknown

11. Who was killed in the incident? Check all that apply.

1. - Driver
2. - Passenger
3. - Bystander
4. - Driver/Other Vehicle
8. - Other

12. How many riders (including the driver) were on the ATV at the time the incident occurred?

0. - Unknown
1. - One rider
2. - Two riders
3. - Three riders
4. - Four or more riders

13. List the following physical characteristics of the DRIVER of the ATV:

Age: **Height:** **(inches)**

Weight: **Sex:**

14. How did the driver learn to operate an ATV (READ LIST)

1. - Organized Program **Sponsor's Name:**
2. - Dealer/Salesperson **Arranged through dealer:**
3. - Friend/Relative **Friend/Relative Age:**
4. - Self
5. - Other (Specify)
9. - Don't Know

15. What was the type of terrain (ground surface) being travelled at the time the incident occurred?

16. Type of road being travelled by ATV when incident occurred?

17. Identify any other motor vehicle(s) involved in this incident.

18. Had the driver of the ATV used alcohol just prior to the incident?

19. Had the driver taken any drugs or medication just prior to the incident?

Additional Comments:

1. Task Number	2. Investigator's ID	EPIDEMIOLOGIC INVESTIGATION REPORT
130325HNE0001	4440	

3. Office Code	4. Date of Accident YR MO DAY	5. Date Initiated YR MO DAY
810	2013 02 26	2013 03 25

6. Synopsis of Accident or Complaint UPC

A 15 year old male was driving a six-wheel utility vehicle (UTV) with a 15 year old male in the passenger seat and neither of the two were wearing a seatbelt or helmet. The UTV passed a four wheel all-terrain vehicle (ATV) and the driver looked back at the ATV and lost control of the UTV. The UTV flipped and ejected the driver. The driver was transported to the hospital where he was pronounced dead the same day as the incident due to blunt force trauma. The passenger was described as having a non-fatal, non-incapacitating injury to the face.

MFR/PRVLBR NOTIFIED

COMMENTS: __YES ✓NO
__OVERRULED; __ATTACHED
✓EXCISIONS/FOIA EXS. 6b;
✓DO NOT RE-NOTIFY __RE-NOTIFY

1/16/14 [illegible]

7. Location (Home, School, etc)	8. City	9. State
4 - STREET OR HIGHWAY	LAURENS COUNTY	GA

10A. First Product	10B. Trade/Brand Name	10C. Model Number
5044 - UTILITY VEHICLES	POLARIS / VIN [redacted]	RANGER 6X6

10D. Manufacturer Name and Address
POLARIS INDUSTRIES INC.
2100 HIGHWAY 55
MEDINA, MN 55340

11A. Second Product	11B. Trade/Brand Name	11C. Model Number
0	NONE	NONE

11D. Manufacturer Name and Address
NONE

12A. Hispanic or Latino	12B. Race	12C. Race Source
2 - No	1 - White Other:	3 - Official Document

13. Age of Victim	14. Sex	15. Disposition	16. Injury Diagnosis
15	1 - Male	8 - Death	62 - Intern. Org. Inj.

17. Body Part(s) Involved	18. Respondent	19. Type of Investigation	20. Time Spent (Operational / Travel)
87 - N.S./UNK	3 - 2nd Hand Info Only	2 - Telephone	8.50 / 0.00

21. Attachment(s)	22. Case Source	23. Sample Collection Number
9 - Multiple Attachments	05 - Newspaper	

24. Permission to Disclose Name (Non NEISS Cases Only)

○ Yes ◉ No ○ Yes for Manuf. Only ○ Verbal ○ Written

25. Review Date	26. Reviewed By	27. Regional Office Director
04/25/2013	2147	Dennis R. Blasius

28. Distribution	29. Source Document Number
Sarah Garland; Tanya L. Topka	X1331168A

The information in this report was obtained through official report reviews of the local area Police Department, Emergency Medical Services (EMS), and Coroner. The medical records were requested, but not available at the time of this investigation.

On February 26, 2013, a 15-year-old boy was driving a six-wheel side-by-side utility vehicle (UTV). There was a 15-year-old boy riding as a passenger in the UTV and neither of the two were wearing a helmet or using the UTV's three-point seat belt.

The boys were traveling down a dirt road at an unknown rate of speed when they passed an all-terrain vehicle (ATV). The driver looked back and over-corrected to the right causing him to lose control. The vehicle overturned and ejected the driver, but the passenger was not ejected. The EMS Report (Exhibit 4) and Coroner's Report (Exhibit 5) show that the UTV rolled over the driver, but the UTV came to a final rest away from the driver.

Someone called 9-1-1 at approximately 12:47 P.M. and EMS arrived on the scene at approximately 12:53 P.M. EMS personnel started cardiopulmonary resuscitation (CPR) and transported the driver to the hospital. The driver was pronounced dead at the hospital approximately one hour later. The manner and cause of death were ruled to be accidental blunt force trauma (Exhibit 5). There was no toxicology performed so it is unknown if the boy was under the influence of alcohol, drugs, or medication.

The passenger was described as having a non-fatal, non-incapacitating injury to the face. According to the Police Report (Exhibit 3), he was taken for treatment at an unknown location. The EMS personnel did not transport the boy so no EMS Report is available. No further information regarding his injuries is available.

The road the boys were operating the UTV on was described as a dry, dirt road. It is unknown if the road was flat or sloped. The weather was described as clear and the light condition was described as daylight. A sketch of the incident scene can be viewed in the Police Report (Exhibit 3).

There were no obstacles in the path of travel of the vehicle. The driver was not making a turn at the time of the incident. The driver had just accelerated to pass an ATV and was looking backward when he over-corrected and lost control of the UTV. The UTV overturned on to its left side during the incident.

DATA RECORD SHEET

The "Appendix 91: All-Terrain Vehicles" Utility Vehicle Data Record Sheet is included as Exhibit 9 with this investigation.

The following questions from the UTV section of the UTV Appendix are unknown:
2, 4, 9, 12, 17

PRODUCT IDENTIFICATION

The incident unit is a 2011 Polaris Ranger 800 EFI 6x6. It is red in color with a complete model number of R11HR76AR 6X6. The UTV Vehicle Identification Number (VIN) is 4XAHR76A3B4200682. A copy of the UTV Owner's Manual is included as Exhibit 6 and a UTV product brochure can be seen as Exhibit 7.

ATTACHMENTS

Exhibit

1. Identity of Respondents (1 Page)
2. Five Photos from Police Department (5 Pages)
3. Police Report (3 Pages)
4. EMS Report (4 Pages)
5. Coroner's Report (2 Pages)
6. UTV Owner's Manual (132 Pages)
7. UTV Brochure (1 Page)
8. CPSC Missing Document Form (1 Page)
9. UTV Data Record Sheet (1 Page)

IDENTITY OF RESPONDENTS

Georgia State Patrol
533 Southern Pines Rd
Dublin, GA 31021
Phone: 478-275-6630
Contacted 3-25-13

Laurens County EMS
646 County Farm Rd
Dublin, GA 31040
Phone: 478-272-0199
Contacted 3-28-13

Laurens County Coroner's Office
PO Box 1999
Dublin, GA 31040
Phone: 478-275-1135
Contacted 4-2-13

Fairview Park Hospital
PO Box 1408
Dublin, GA 31040
Phone: 478-275-2000
Contacted 3-25-13

Photo 1: Incident Unit Utility Vehicle (UTV)

Photo 2: Front of Incident Unit UTV

Photo 3: Underside of Incident Unit UTV

Photo 4: Incident unit UTV

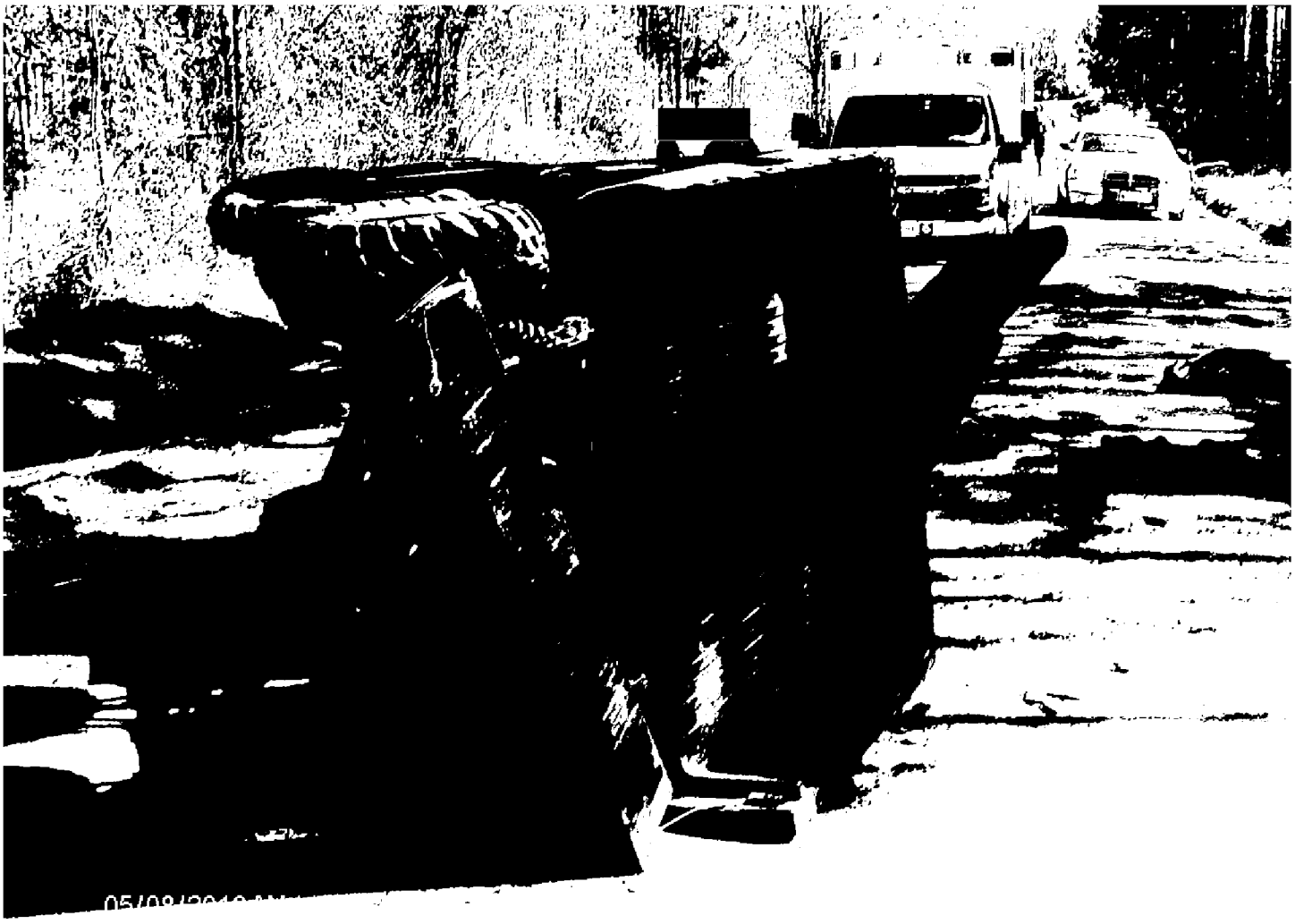

Photo 5: Interior of Incident Unit UTV

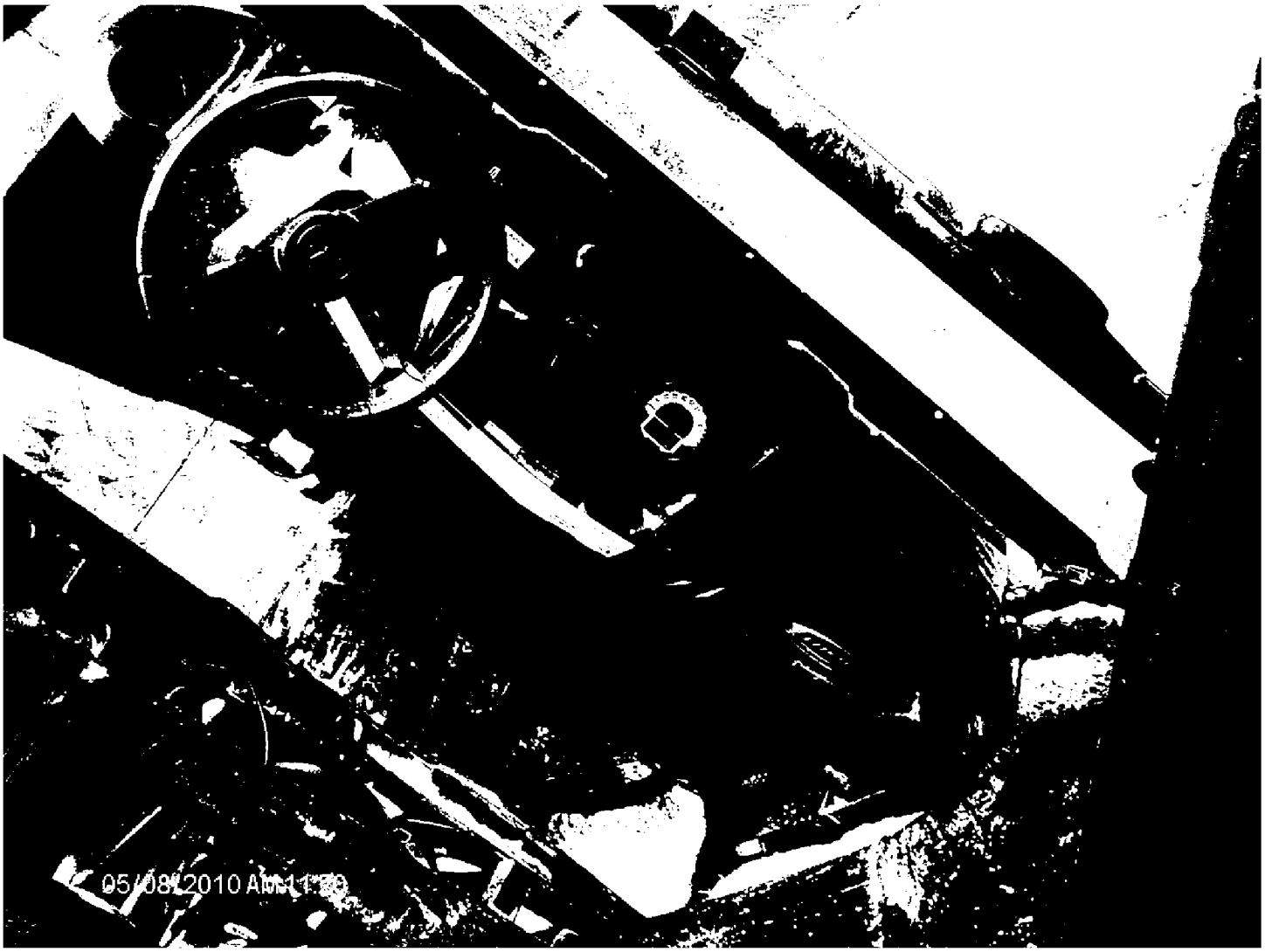

STATE OF GEORGIA TRAFFIC CRASH REPORT

Georgia State Patrol
Georgia Department of Public Safety
P.O. Box 1456
Atlanta, Georgia 30371-1456

Crash Number	Reporting Agency	Reporting Agency Case Number	Reporting Agency CAD Number
C000154553-01	GEORGIA DEPARTMENT OF PUBLIC SAFETY		GSPF13CAD009494

CRASH IDENTIFIERS

County of Crash	City or Place of Crash	☐ City Limits	Crash Date/Time	Reported Date/Time	Dispatched Date/Time
LAURENS			02/26/2013 12:44 PM	02/26/2013 12:51 PM	02/26/2013 12:52 PM

On Scene Date/Time	Cleared Scene Date/Time	Complete Date/Time	Reason (if Investigation Not Complete)	Source of Information
02/26/2013 01:08 PM	02/26/2013 02:05 PM	02/26/2013 03:00 PM		LAW ENFORCEMENT AGENCY

ROADWAY INFORMATION

Roadway Description for Location of Occurrence	Distance to City or Place of Crash	Latitude	Longitude
ALCORN ROAD		N 32 23.0961	W 83 5.0559

Intersecting Roadway Description for Location of Occurrence	Distance / Direction from Crash Location	☑ Roadway Blocked	Roadway Cleared Date/Time
.2 MILES WEST OF DUBLIN EASTMAN RD			2/26/2013 1:50:00 PM

Part of National Highway System	Roadway Functional Class Type	Roadway Functional Class Detail
NO	RURAL	LOCAL

Type of Shoulder	Roadway Lighting	Roadway Bikeway Facility	Signed Bicycle Route
UNPAVED	NO LIGHTING	NONE	NOT APPLICABLE

Traffic Control Type at Intersection	Mainline Number of Lanes at Intersection	Side Road Number of Lanes at Intersection
NO CONTROL		

CRASH INFORMATION

Light Condition	Weather Condition	Roadway Surface Condition	☑ Crash Pictures Taken
DAYLIGHT	CLEAR	DRY	

First Harmful Event Type	First Harmful Event Detail
NON-COLLISION	OVERTURN/ROLLOVER

Total Counts	Vehicles	CMV	Motorists	Non-Motorists	Injured	Fatalities	Witnesses	Other Persons	Businesses	Violations
	1	0	2	0	1	1	1	0	0	0

First Harmful Event's Relation to Junction	Is First Harmful Event within Interchange Area	Type of Intersection
NON-JUNCTION	NO	NOT AT INTERSECTION

Contributing Circumstances: Environment	Contributing Circumstances: Environment	Contributing Circumstances: Environment
NONE	NONE	NONE

Contributing Circumstances: Road	Contributing Circumstances: Road	Contributing Circumstances: Road
NONE	NONE	NONE

School Bus Related	Work Zone Related	Crash Location in Work Zone
NO	NO	

VEHICLE V01

▶ V01	Motor Vehicle Type	State	License Number	Registration Expires	☐ Permanent Registration	Color
	MOTOR VEHICLE IN TRANSPORT	GA	(b)(3)			(b)(3):Exempti

Year	Make	Model	Style	Color	Body Type Category
2011	POLARIS	(b)(3):Exem	ATV	RED	ALL TERRAIN VEHICLE (ATV)

Special Function of Motor Vehicle in Transport	Emergency Motor Vehicle Use	Type of Bus Use
NO SPECIAL FUNCTION	NO	NOT A BUS

(b)(3):Exemption 3 for 25(c)

Owner Name	Owner Suffix	Owner Business (if not Person)
(b)(3):Exemp		

Owner Address	Address Other	City	State	Zip
(b)(3):Ex		(b)(3):Exemption 3 for 25(c)		

Owner Phone Number	Owner Phone Number (other)	Insurance Company	Insurance Policy Number
		NO INSURANCE	NONE

Vehicle Removal	Vehicle Towed By	Wrecker Selection Method
TOWED DUE TO DISABLING DAMAGE	LINDSEY'S WRECKER	ROTATION

Direction of Travel Before Crash	Speed: Estimated	Posted	Roadway Type	Total Lanes	Roadway Horizontal Alignment	Roadway Grade
WESTBOUND		35	UNDIVIDED HIGHWAY	1	STRAIGHT	DOWNHILL

Trafficway Description	Traffic Control Device Type	Working Property
TWO-WAY NOT DIVIDED	NO CONTROLS	

Roadway Description for Vehicle Travel
ALCORN ROAD

Vehicle Maneuver Action (by this vehicle)	Hit & Run (by this vehicle)	Damage Extent (for this vehicle)
OVERTAKING/PASSING	NO DID NOT LEAVE SCENE	DISABLING DAMAGE

1st Sequence of Events Type (this vehicle)	1st Sequence of Events Detail (this vehicle)
NON-COLLISION	OVERTURN/ROLLOVER

Most Harmful Event Type (this vehicle)	Most Harmful Event Detail (this vehicle)
NON-COLLISION	OVERTURN/ROLLOVER

Contributing Circumstances 1 (this vehicle)	Contributing Circumstances 2 (this vehicle)
NONE	NONE

Area of Initial Impact
- ☐ Non Collision
- ☑ Top
- ☐ Undercarriage
- ☐ Unknown

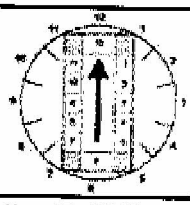

Most Damaged Area
- ☐ Non Collision
- ☑ Top
- ☐ Undercarriage
- ☐ Unknown

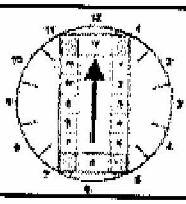

Occupant Type	Person Name (First Middle Last Suffix)	Injury Status
DRIVER	(b)(3):Exemption 3 for 25(c)	FATAL INJURY (K)
PASSENGER		NON FATAL INJURY

DRIVER V01

▶ Person Type	NM#	Vehicle#	Person Type Detail
DRIVER		V01	

First Name	Middle Name	Last Name	Suffix	Date of Birth	Age	Sex
(b)(3):Exemption 3 for 25(c)				997	15	M

Address	Address Other	City	State	Zip
(b)(3):Exemptio		(b)(3):Exemption 3 for 25(c)		

Phone Number	Phone Number (other)	Condition at Time of Crash
		APPARENTLY NORMAL

Driver License Number	Class	Expires	State	Jurisdiction	Type	Status
[redacted]	CP	014	GA	02	NON-CDL DRIVER'S LICENSE	VALID LICENSE

Drivers License Restrictions 1	Drivers License Restrictions 2	Drivers License Restrictions 3
NONE	NONE	NONE

Crash Number	Reporting Agency	Reporting Agency Case Number	Reporting Agency CAD Number
C000154553-01	GEORGIA DEPARTMENT OF PUBLIC SAFETY		GSPF13CAD009494

Driver Distracted By: EXTERNAL DISTRACTION (OUTSIDE THE VEHICLE)
Driver Vision Obstructions: VISION NOT OBSCURED
Driver Actions at Time of Crash 1 (based on judgement of investigation officer): OVER-CORRECTING/OVER-STEERING
Driver Actions at Time of Crash 2 (based on judgement of investigation officer): NO CONTRIBUTING ACTION
Driver Actions at Time of Crash 3 (based on judgement of investigation officer): NO CONTRIBUTING ACTION
Driver Actions at Time of Crash 4 (based on judgement of investigation officer): NO CONTRIBUTING ACTION
Motor Vehicle Seating Position: Row: FRONT
Motor Vehicle Seating Position: Seat: LEFT
Motor Vehicle Seating Position: Other: NOT APPLICABLE
☐ Seating Position Unknown
Restraint Systems: NONE USED - MOTOR VEHICLE OCCUPANT
Helmet Use: NO HELMET
Air Bag Deployed: NOT APPLICABLE
Ejection: EJECTED TOTALLY
Trapped Extrication: NOT TRAPPED
Injury Severity Level Type: FATAL INJURY (K)
Injury Severity Level Detail:
Primary or Most Obvious of Body Area Injured During Crash: UNSPECIFIED
Source of Transport to Medical Facility: EMS GROUND
EMS Agency Name or ID: LAURENS COUNTY EMS
EMS Run Number: 1163
Medical Facility Transported To: FAIRVIEW PARK HOSPITAL
Law Enforcement Suspected Alcohol Use: NO
Alcohol Test Type:
Alcohol Tested: TEST NOT GIVEN
Alcohol Test Result:
BAC:
Law Enforcement Suspected Drug Use: NO
Drug Test Type:
Drug Tested: TEST NOT GIVEN
Drug Test Result:

PASSENGER V01

Person Type: PASSENGER
NM#:
Vehicle#: V01
Person Type Detail:
(b)(3):Exemption 3 for 25(c)
Suffix:
Date of Birth: 998
Age: 15
Sex: M
(b)(3):Exe
Address Other:
(b)(3):Exemption 3 for 25(c)
(b)(3):Ex
Phone Number (other):
Condition at Time of Crash: APPARENTLY NORMAL
Motor Vehicle Seating Position: Row: FRONT
Motor Vehicle Seating Position: Seat: RIGHT
Motor Vehicle Seating Position: Other: NOT APPLICABLE
☐ Seating Position Unknown
Restraint Systems: NONE USED - MOTOR VEHICLE OCCUPANT
Helmet Use: NO HELMET
Air Bag Deployed: NOT APPLICABLE
Ejection: NOT EJECTED
Trapped Extrication: NOT TRAPPED
Injury Severity Level Type: NON FATAL INJURY
Injury Severity Level Detail: NON-INCAPACITATING (B)
Primary or Most Obvious of Body Area Injured During Crash: FACE
Source of Transport to Medical Facility: OTHER
EMS Agency Name or ID:
EMS Run Number:
Medical Facility Transported To:
Injury Description (Type of Injury inflicted to Primary or Most Obvious Body Area Injured during Crash. Can come from EMS / Hospital records):
Passenger was taken for treatment to an unknown location at an unknown date and time.
Law Enforcement Suspected Alcohol Use: NO
Alcohol Test Type:
Alcohol Tested: TEST NOT GIVEN
Alcohol Test Result:
BAC:
Law Enforcement Suspected Drug Use: NO
Drug Test Type:
Drug Tested: TEST NOT GIVEN
Drug Test Result:

WITNESS

Person Type: WITNESS
NM#:
Vehicle#:
Person Type Detail:
First Name: (b)(3):
Middle Name:
Last Name: (b)(3):E
Suffix:
Date of Birth: .997
Age: 15
Sex: M
Address: (b)(3):Exempti
Address Other:
(b)(3):Exemption 3 for 25(c)
Phone Number: (b)(3):Ex
Phone Number (other):
Condition at Time of Crash: APPARENTLY NORMAL

NARRATIVE: C000154553

Vehicle #1, a Polaris Ranger, was traveling west on Alcom Road. Vehicle #1 and the witness vehicle, also an all-terrain-vehicle, were traveling parallel. Vehicle #1 traveled from near the center of the roadway and passed the witness vehicle on the left. The driver of the witness vehicle stated the driver of vehicle #1 was looking back towards him. The driver of vehicle #1 over-corrected to the right, which caused the driver to lose control. Vehicle #1 yawed in a clockwise manner for approximately 76 feet, and overturned onto its left side. After initial impact, Vehicle # 1 traveled an additional 32 feet to an uncontrolled final rest on its right side facing east. The driver of vehicle #1 was ejected from the vehicle. The width of the roadway is approximately 25 feet.

Note: This crash investigation was recorded on DVD #434-007-2013 along with the witness statements. The scene was digitally photographed by the investigating trooper.

REPORTING OFFICER			APPROVING OFFICER (SUPERVISOR)		
Reporting Officer Name: HARRISON, CHAD T.		Signature	Approving Officer Name: BRYANT, D. M.		Signature
ID Number: 0434	Rank: TFC		ID Number: 0431	Rank: CORPORAL	
Org / Unit: F-20			Org / Unit: F-20		

Crash Number	Reporting Agency	Reporting Agency Case Number	Reporting Agency CAD Number
C000154553-01	GEORGIA DEPARTMENT OF PUBLIC SAFETY		GSPF13CAD009494

DIAGRAM OF ACCIDENT

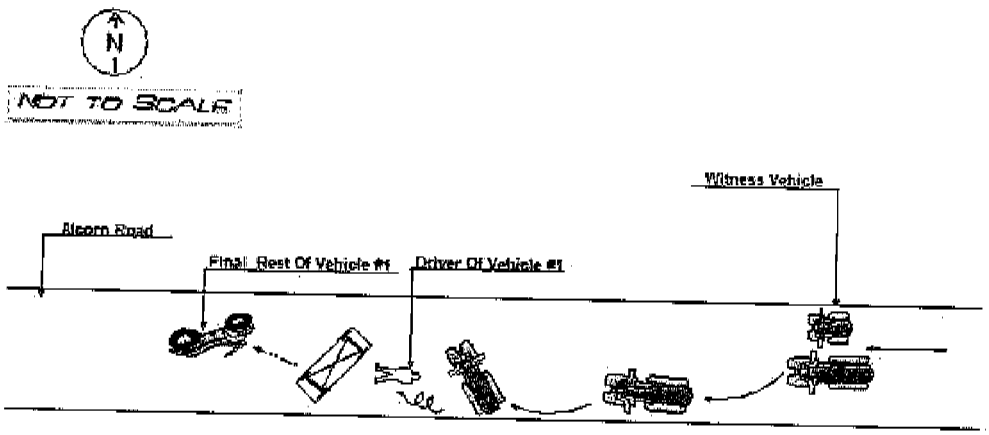

Patient Care Report
(Standard)

LAURENS COUNTY EMS
646 COUNTY FARM RD
DUBLIN , GA 31021
Phone: (478)272-0199 Fax: (478)277-2929

Page No: 1/4
Report Date: 02/26/2013

Trip Number: 13-1163 **D.O.S.** 02/26/13 12:47:00 **Shift:** B **Call Sign:** SQUAD3 **Station:** 003

Name: (b)(3):Exemption 3 for 25(c) **Unit:** 008 **Call Type:**

Patient

Name: (b)(3):Exemption 3 for 25(c)
Address
City:
State:
Phone:

Age: 15 **Race:** White
Birth Date: (b)(3):Exemp
SSN#:
Gender: Male

Complaint

Chief Complaint: CARDIAC CARDIORESPIRATORY ARREST
Secondary Complaint:

Patient History / Notes

Description: Not Known

Drug Allergies / Notes

Drug Name:

Current Medications

Drug Code	Drug Name	Dose	Units	Route

Patient Insurance

Medicare # **Medicaid #**

Insurance Company	Policy #	Group Id	Insured Name	Relationship

Incident / Scene

Incident Location: SCENE
Address: ALCORN RD NEAR DUBLIN EASTMAN
City: Dublin
State: GA Zip: 31021

Dispatch Complaint: Traumatic Injury
Dispatch Priority: Emergency
Response Mode: Lights and Sirens
Department:
Grid/Zone: 3

Outcome / Disposition

Patient Disposition: Treated, Transported by EMS
Destination Type: Hospital

Transport Mode: No Lights or Sirens
Referring MD:

Trip Number: 13-1163 **D.O.S.** 02/26/13 12:47:00 **Name:** (b)(3):Exemption 3 for 25(c) Page No: 2/4

Reason:	Patients Physicians Choice	Department:	
Destination Name:	FAIRVIEW PARK HOSPITAL	Facility ID:	510
Address:	200 INDUSTRIAL BLVD	Treating Phys:	MILLER JERI
City:	Dublin		
State: GA	Zip: 31021-2981		

Call Times / Mileage

Times

Incident:	2/26/2013 12:47:00	Arrived Patient:	2/26/2013 12:53:00	Back At Zone:	2/26/2013 15:00:00
Received:	2/26/2013 12:47:00	Transferred:			
Dispatch Notified:	2/26/2013 12:47:00	Left Scene:	2/26/2013 13:24:00		
Unit Notified:	2/26/2013 12:47:00	Arrived Dest:	2/26/2013 13:42:00		
Unit Enroute:	2/26/2013 12:48:00	Back In Service:	2/26/2013 15:00:00		
Arrived Scene:	2/26/2013 12:53:00	Cancelled:			

Odometer Reading

Beginning:	405.3	Scene:	410.2
Destination:	424.4	End:	424.4

Total Miles

To Scene:	4.90	Total:	19.10
Loaded Miles:	14.20		

Assessment

Time:		Provider:	STACY KITCHENS

Skin

Skin Color:	Ashen
Skin Temperature:	Cool
Skin Moisture:	Dry
Skin Turgor:	< 2 seconds
Dependent Lividity:	N/A
Rigor Mortis:	

Head / Face / Neck

Head:	No Abnormalities Noted
Face:	No Abnormalities Noted
Nose:	No Abnormalities Noted
Ears:	No Abnormalities Noted
Neck:	No Abnormalities Noted
Neck Veins:	Flat
Trachea:	Midline
Devices:	None

Left Eye

Reactivity:	Non-Reactive
Description:	Clear
Pupil Size:	5

Right Eye

Reactivity:	Non-Reactive
Description:	Clear
Pupil Size:	5

Chest

Back

Trip Number: 13-1163 **D.O.S.** 02/26/13 12:47:00 **Name:** (b)(3):Exemption 3 for 95(c)

Chest Left:	Contusion, Subcutaneous Emphysema	Cervical:	No Abnormalities Noted
Chest Right:	Contusion, Subcutaneous Emphysema	Thoracic:	No Abnormalities Noted
Breath Sounds Lf.	Normal	Lumbar:	No Abnormalities Noted
Breath Sounds Rt.	Normal		
Heart Sounds:	Not Assessed		

Abdomen

Left Upper:	No Abnormalities Noted
Right Upper:	No Abnormalities Noted
Left Lower:	No Abnormalities Noted
Right Lower:	No Abnormalities Noted
Bowel Sounds:	Present

Vitals

Time	PTA	EKG	BP/S	BP/D	Pulse	Resp Rate	Sa02	Gluc.	Temp	Pain	GCS
02/26/13 12:53:00	0	Agonal/Idioventricular, Asystole	0	0	0	0					3

Est. Body Weight in KG: Browslow / Luten Color: [Not Applicable]

Treatment

Time	Treatment Given	Details	Medic	Assistant
02/26/13 12:53:00	Spinal Immobilization - Long Back Board	Spine Initiated By:Responding EMS Agency C-Collar:True CID:False KED:False LSB/Strap:True Re-immobilizd prior to departure:True Secured to LS Stretcher:True	3190	
02/26/13 12:53:00	Venous Access-Intraosseous Adult	Iv Site:Tibia IO-Left Fluid:NS Gauge: Rate:Wide Tube Size:10	3190	
02/26/13 12:53:00	Airway - Endotracheal Intubation	Tube Size:7 (mm) Secured At:22 (cm) Secured With:Tie Breath Sounds Left:Normal Right:Normal ET C02: Placement Initial:Visualization of Tube Passing Through the Cords, Auscultation of Bilateral Breath Sounds, Negative Auscultation of the Epigastrium, Visualization of the Chest Rising with ventilation Destination:	3190	
02/26/13 16:24:51	Cardiac Monitor		3190	
02/26/13 16:24:52	Assessment-Adult		3190	
02/26/13 16:25:01	Cervical Spinal Immobilization - Rigid Collar		3190	
02/26/13 16:25:03	Stretcher		3190	

Narrative

ALS ASSESSMENT. VITALS: BLOOD PRESSURE 0/0 , PULSE 0 REGULAR, RESPIRATIONS 0 NORMAL, PULSE OX , AND GCS OF 3 , PATIENT REPORT CALLED INTO THE HOSPITAL PRIOR TO ARRIVAL. EMS CALLED TO PT INVOLVED IN A MVC ATV ROLLED OVER ON TO PT ON A

Trip Number: 13-1163 D.O.S. 02/26/13 12:47:00 Name: (b)(3):Exemption 3 Page No: 4/4

DIRT ROAD ,ARRIVED TO FIND A 15 Y/O MALE PT LAYING IN THE ROAD WAY WITH A ATV LAYING NEAR PT ,PT WAS FACE DOWN ,NOTED A POOL OF BLOOD FROM PT MOUTH AREA APROX 1000 CC ,PT WAS PULSELESS AND APANIC ,NOTED SUB Q EMPHYSEMA TO BACK NEAR HIS SHOULDER BLADES AREA ,PT ROLLED OVER ONTO A SPINE BOARD ,PLACED PT ONTO CARDIAC MON AT AGONAL/PEA RATE OF 10-20 ,EMS STARTED CPR ,HEAVY JACKET CUT OFF PT ,NOTED BRUISING TO FRONT CHEST WALL ON BOTH SIDES ,WHEN EMS STARTED COMPRESSIONS NOTED LARGE AMOUNT OF BLOOD COMING FROM PT MOUTH ,SUCTION ABOUT 500 CC OF BLOOD OUT PT A/W ,INTUBATED PT WITH 7.0 ETT SECURE WITH HOLDER ,NOTED TUBE PASSING BETWEEN CORDS AND EQUAL CHEST RISE AND BREATH SOUNDS ,NO SOUND IN ABDOMINAL AREA,NOTED LARGE AMOUNT OF BLOOD IN A/W AGAIN SUCTIONED ABOUT 500 CC OF BLOOD AGAIN FROM A/W ,PT SECURE TO SPINE BOARD WITH STRAPS AND PLACED C COLLAR ONTO PT ,NOTED BLOOD COMING OUT OF ETT TUBE ,UNABLE TO HOOK UP CAPNOGRAPHY DUE TO BLOOD BEING PULLED UP INTO CARDIAC MON ,NOTED POSS RIB FX IN MULTIPLE PLACES ON BOTH SIDES OF HIS CHEST ,MOVED TO UNIT PLACED A I/O TO LEFT TIBIA WITH 1000 CC WIDE OPEN ,CARDIAC MON NOW SHOWING ASYSTOLE ,CPR CONT ,PARAMEDIC F JONES CALLED TO FPH-ER AND SPOKE WITH DR MILLER EXPLAINED THE CONDITION OF PT ,SHE GAVE ORDERS TO STOP CPR AND STOP Resuscitation PT ,ASYSTOLE RECORDED IN 2 LEADS ,AND TIME OF DEATH WAS 1313 HRS ,CALLED TO 74R AND HE WANTED TO HAVE PT TRANSPORTED TO FPH-MORGUE ,PT WAS NOTED TO HAVE NON LIFE Sustaining CHEST INJURIES FOR POSS BLUNT FORCE TRAUMA ,POSS Appeared TO HAVE HAD A LARGE ATV/SIDE BY SIDE ROLL OVER HIM ,ATV WAS OFF PT LAYING OFF TO THE SIDE ,PT WAS TRANSPORTED TO FPH PER 74R

Completed By: skitchens

Signatures

CREW

CREW

Secondary Care Giver

18341 - MELINDA DELOACH 2/26/2013

Received By

Primary Care Giver

3190 - STACY KITCHENS 2/26/2013

Physician Ord. Treatment

RN 2/26/2013

Tony Johnson

MILLER JERI 2/26/2013

Deputy Coroner
Richard Nathan Stanley, IV
lccoroner74rdc1@siscons.com

Deputy Coroner
A. O. Pearson, Jr.
lccoroner74rdc2@siscons.com

Coroner Richard N. Stanley, III

Laurens County Coroner's Office

P.O. Box 1999
Dublin, Georgia 31040
(478) 275-1135 Fax (478) 275-2807
lccoroner@siscons.com

Coroner's Report

Date:

Decedent Information

Name: (b)(3):Exemption 3 for 25(c) [redacted]
Address:
State/Zip:
Municipality:
Date of Birth: (b)(3):Exemption 3 for 25(c) [redacted]
Age: 15
Soc. Sec.: [redacted]
Sex: Male
Mar. Status: Single
Race: White

Date of Birth: (b)(3):Exemption 3 for 25(c) [redacted]
Name of Kin:
Relationship:
Address:
City/State/Zip:
Home Phone:
Other Phone:

Case Details

Date of Death: Feb. 26, 2013
Time: 12:44 P.M.
Place: Fairview Park Hospital E.R.
Announced: Richard Stanley
Time: 1:55 P.M.
Date of Death:
Time:
Injury or Wound: Yes X No
Cause: Blount force Trama
Due to: ATV Accident
SAC
Due to:
COD
Due to:
Manner: Natural XX Accidental Suicide Homicide Pending Undetermined
Physician: Dr. Teresa Hatten M.D. come to E.R.
Autopsy: Yes XX No
Autopsy Date:
Location:
Performed by:
Police Dept: Georgia State Patrol Chad Harrison
Officer:

Decedent Medications / Drugs

2 Tenths of a mile from Dublin/Eastman Road on Alcohron Road. Polaris Ranger overturned on top of Mr. (b)(3):Exempti[redacted].
No Autoposy No Tox

Description of Incident Leading to Death

Townsend Funeral Home per (b)(3):Exemption 3 for 25(c) [redacted]

Comments

Coroner/Deputy Information

Signed by: RO N. [signature]
Printed: LAURENS COUNTY CORON

GEORGIA DEATH CERTIFICATE

A. BIRTH CERTIFICATE NUMBER

B. STATE FILE NUMBER

DECEDENT'S INFORMATION

1. DECEDENT'S LEGAL FULL NAME (FIRST, MIDDLE, LAST): (b)(3):Exemption 3 for

1a. LAST NAME AT BIRTH (IF FEMALE):

2. SEX: Male

2a. DATE OF DEATH (MO/DAY/YR): February 26, 2013

3. SOCIAL SECURITY NUMBER: [redacted]

4a. AGE (YEARS): 15

4b. UNDER 1 YEAR: MONTHS / DAYS

4c. UNDER 1 DAY: HOURS / MINUTES

5. DATE OF BIRTH (MO/DAY/YR): (b)(3):Exempt

6. BIRTHPLACE (CITY AND STATE OR FOREIGN COUNTRY): (b)

7a. STREET AND NUMBER OF RESIDENCE: (b)(3):Exemption

7b. ZIP CODE: (b)(3):Exemptio

7c. CITY OR TOWN OF RESIDENCE

7d. COUNTY OF RESIDENCE: Laurens

7e. STATE OF RESIDENCE: Georgia

7f. COUNTRY: United States

7g. INSIDE CITY LIMITS: ☐ Yes ☒ No ☐ Unknown

8. ARMED FORCES: ☐ Yes ☒ No ☐ Unknown

8a. OCCUPATION: Student

8b. NATURE OF BUSINESS: N/A

8c. EMPLOYER: N/A

9. MARITAL STATUS: ☐ Married ☐ Married, but separated ☐ Widowed ☐ Divorced ☒ Never Married ☐ Unknown

10. SPOUSE'S NAME (IF WIFE, GIVE NAME PRIOR TO FIRST MARRIAGE)

11. FATHER'S NAME (FIRST, MIDDLE, LAST): (b)(3):Exemption 3 for 25(c)

12. MOTHER'S NAME PRIOR TO FIRST MARRIAGE (FIRST, MIDDLE, LAST): (b)(3):Exemption 3 for 25(c)

13. DECEDENT'S EDUCATION (HIGHEST LEVEL): ☐ 8th grade or less ☒ 9th - 12th grade; no diploma ☐ High school graduate or GED completed ☐ Some college credit, but no degree ☐ Associate degree (e.g., AA, AS) ☐ Bachelor's degree (e.g., BA, AB, BS) ☐ Master's degree (e.g., MA, MS, MEng, Med, MSW) ☐ Doctorate (e.g., PhD, EdD) or Professional degree (e.g., MD, DDS, DVM, LLB, JD) ☐ Unknown

14a. INFORMANT'S NAME (FIRST, MIDDLE, LAST): (b)(3):Exemptio

14b. RELATIONSHIP TO DECEDENT: Father

14c. MAILING ADDRESS (STREET AND NUMBER, CITY, STATE, ZIP CODE): (b)(3):Exemption 3 for 25(c)

15b. HISPANIC ORIGIN: ☒ No, not Spanish/Hispanic/Latino ☐ Yes, Puerto Rican ☐ Yes, Mexican, Mexican American, Chicano ☐ Yes, Cuban ☐ Yes, other Spanish/Hispanic/Latino (Specify) ☐ Unkown

16. DECEDENT'S RACE: ☒ White ☐ Japanese ☐ Asian Indian ☐ Chinese ☐ Filipino ☐ Black/African American ☐ Korean ☐ Vietnamese ☐ Native Hawaiian ☐ Guamanian/Chamorro ☐ Samoan ☐ American Indian/Alaska Native ☐ Other Asian ☐ Other ☐ Unknown

17a. IF DEATH OCCURRED IN HOSPITAL: ☐ Inpatient ☒ Emergency Room/Outpatient ☐ Dead on Arrival

17b. IF DEATH OCCURRED OTHER THAN HOSPITAL: ☐ Hospice Facility ☐ Nursing Home/Long Term Care Facility ☐ Decedent's Home ☐ Other ☐ Unknown

DISPOSITION

18. FACILITY NAME: Fairview Park Hospital

19. FACILITY ADDRESS (STREET AND NUMBER, CITY, STATE, ZIP CODE): 200 Industrial BLVD/Dublin, GA 31021 (Laurens)

20. COUNTY OF DEATH

21. METHOD OF DISPOSITION: ☒ Burial ☐ Donation ☐ Removal from State ☐ Cremation ☐ Entombment ☐ Other

22. PLACE OF DISPOSITION (NAME AND COMPLETE ADDRESS): Dexter Baptist Church Cemetery, Hwy 338 Dexter,GA 31019

23. DATE OF DISPOSITION (MO/DAY/YR): March 2, 2013

24a. EMBALMER'S NAME & CERTIFIED INITIALS: James E. Townsend, Jr. JET

24b. LICENSE NUMBER: 2865

25. FUNERAL HOME NAME: Townsend Brothers Funeral Home, Inc.

25a. FUNERAL HOME ADDRESS (STREET AND NUMBER, CITY, COUNTY, STATE, ZIP CODE): 215 West Jackson Street, Dublin, GA Laurens, 31021

26. FUNERAL DIRECTOR'S NAME (PRINT): Robert Michael Vestal

26a. SIGNATURE OF FUNERAL DIRECTOR

26b. LICENSE NUMBER: 3241

PRONOUNCER

27. DATE PRONOUNCED DEAD (MO/DAY/YR): Feb. 26, 2013

28. TIME PRONOUNCED DEATH: 1:55 P.M.

29a. PRONOUNCER'S NAME AND TITLE (PRINT): Richard N. Stanley, III- Coroner

29b. PRONOUNCER'S LICENSE NUMBER: #09004456

30. ACTUAL OR PRESUMED TIME OF DEATH: 12:44 P.M.

CAUSE OF DEATH

31. Part I. Enter the chain of events-diseases, injuries, or complications-that directly caused the death. DO NOT enter terminal events such as cardiac arrest, respiratory arrest, or ventricular fibrillation without showing the etiology. DO NOT ABBREVIATE.

IMMEDIATE CAUSE (Final disease or condition resulting in death)

A Blount Force Trauma

Due to, or as a consequence of

Sequentially list conditions, if any, leading to the cause listed on line a. Enter the UNDERLYING CAUSE (disease or injury that initiated the events resulting in death) LAST.

B ATV Accident

Due to, or as a consequence of

C

Due to, or as a consequence of

D

Approximate interval between onset and death

Part II. Enter other significant conditions contributing to death but not resulting in the underlying cause given in Part I

32. WAS AUTOPSY PERFORMED: ☐ Yes ☒ No ☐ Unknown

33. WERE AUTOPSY FINDINGS AVAILABLE TO COMPLETE THE CAUSE OF DEATH? ☐ Yes ☒ No ☐ Unknown

33a. WAS AN INJURY OF ANY KIND INDICATED IN THE CAUSE OF DEATH FOR PART I OR PART II WITH THE DECEDENT: ☒ Yes ☐ No ☐ Unknown

34. WAS CASE REFERRED TO MEDICAL EXAMINER OR CORONER: ☒ Yes ☐ No ☐ Unknown

35. TOBACCO USE CONTRIBUTE TO DEATH: ☐ Yes ☒ No ☐ Unknown ☐ Probably

36. IF FEMALE: ☐ Not Applicable ☐ Not pregnant within past year ☐ Not pregnant, but pregnant within 42 days of death ☐ Not pregnant, but pregnant 43 days to 1 year before death ☐ Pregnant at the time of death ☐ Unknown if pregnant within the past year

37. MANNER OF DEATH: ☒ Accident ☐ Natural ☐ Could not be determined ☐ Pending Investigation ☐ Homicide ☐ Suicide

38. DATE OF INJURY (MO/DAY/YR): Feb. 26, 2013

39. TIME OF INJURY: 12:44 P.M.

40. PLACE OF INJURY (e.g., Decedent's home, construction site, restaurant wooded area): County Road

41. INJURY AT WORK: ☐ Yes ☒ No ☐ Unknown

42. LOCATION OF INJURY (STREET AND NUMBER, CITY, STATE, COUNTY, ZIP CODE): Two Tenths of a mile from Dublin Eastman Road on Acorn Road/Dexter, GA 31019 (Laurens)

43. DESCRIBE HOW INJURY OCCURRED: Polaris Ranger Overturned

44. IF TRANSPORTATION INJURY: ☒ Driver/Operator ☐ Passenger ☐ Pedestrian ☐ Other

CERTIFICATION

45. To the best of my knowledge death occurred at the time, date, place, and due to the cause(s) stated. **Medical Certifier (Name, Title, License No.) (PRINT AND SIGN)**

46. On the basis of examination and/or investigation, in my opinion death occurred at the time date, place, and due to the cause(s) stated. **Medical Examiner/Coroner (Name, Title, License No.) (PRINT AND SIGN)**: Coroner Richard N. Stanley, III- Coroner #09004456

45a. DATE SIGNED (MO/DAY/YR)

45b. HOUR OF DEATH

46a. DATE SIGNED (MO/DAY/YR): March 4, 2013

46b. HOUR OF DEATH: 12:44 P.M.

47. PERSON COMPLETING CAUSE OF DEATH (NAME, ADDRESS, COUNTY, ZIP CODE): Coroner Richard N. Stanley, III P.O. Box 1999/Dublin, GA 31040 (Laurens)

48. REGISTRAR SIGNATURE **(PRINT AND SIGN)**

49. DATE FILED (REGISTRAR) (MO/DAY/YR)

Form 3903 (Rev. 09/2009)

This certificate does not constitute a certified copy without the appropriate certification on the back.

PMS 419

polaris®

The Way Out.

RANGER 800 XP®
RANGER 800 HD®
RANGER 800 6X6
RANGER 800 CREW®

Owner's Manual
for Maintenance and Safety

⚠ WARNING

Read, understand, and follow all of the instructions and safety precautions in this manual and on all product labels.

Failure to follow the safety precautions could result in serious injury or death.

⚠ WARNING

The engine exhaust from this product contains chemicals known to the State of California to cause cancer, birth defects or other reproductive harm.

The text is printed on 100% recycled
with 40% post-consumer waste (PCW).

PMS 419

⚠WARNING

Improper vehicle use can result in SEVERE INJURY or DEATH.

NEVER Operate:

- **At speeds too fast for your skills or the conditions.**
- **After or while using Alcohol or Drugs.**
- **On hills steeper than 15 degrees ∠ 15°.**
- **On public roads. A collision can occur with another vehicle.**
- **With more than two passengers on the 4X4 or 6X6, with more than 5 passengers on the CREW, or with passengers under age twelve or who cannot comfortably reach the floor and hand holds.**
- **On paved surfaces - pavement may seriously affect handling and control.**
- **With non-Polaris approved accessories - they may seriously affect stability.**

ALWAYS:

- **Wear your seat belt. Vehicle rollover could cause severe injury or death.**
- **Wear a helmet and eye protection and keep hands and feet in vehicle at all times. Use the cab nets.**
- **Reduce speed and use extra caution when carrying passengers.**
- **Avoid sharp turns or turns while applying heavy throttle.**
- **Operate slowly in reverse - avoid sharp turns or sudden braking.**
- **Make sure passenger reads and understands all safety labels.**
- **Watch for branches or other hazards that could enter vehicle.**

READ OWNER'S MANUAL.
FOLLOW ALL INSTRUCTIONS AND WARNINGS.

POLARIS®
The Way Out.

For your nearest Polaris dealer,
call 1-800-POLARIS
or visit www.polarisindustries.com
Polaris Sales Inc.,
2100 Hwy. 55, Medina, MN 55340
Phone 1-888-704-5290
Part No. 9923125 Rev 01
Printed in USA

WELCOME

Thank you for purchasing a POLARIS vehicle, and welcome to our world-wide family of POLARIS owners. We proudly produce an exciting line of utility and recreational products.

- Snowmobiles
- All-terrain vehicles (ATVs)
- *RANGER*® utility vehicles
- Victory Motorcycles®
- Low Emission Vehicles (LEVs)

We believe POLARIS sets a standard of excellence for all utility and recreational vehicles manufactured in the world today. Many years of experience have gone into the engineering, design, and development of your POLARIS vehicle, making it the finest machine we've ever produced.

For safe and enjoyable operation of your vehicle, be sure to follow the instructions and recommendations in this owner's manual. Your manual contains instructions for minor maintenance, but information about major repairs is outlined in the POLARIS Service Manual and should be performed only by a Factory Certified Master Service Dealer® (MSD) Technician.

Your POLARIS dealer knows your vehicle best and is interested in your total satisfaction. Be sure to return to your dealership for all of your service needs during, and after, the warranty period.

We also take great pride in our complete line of apparel, parts and accessories, available through our online store at www.purepolaris.com. Have your accessories and clothing delivered right to your door!

POLARIS®
The Way Out.

POLARIS, THE WAY OUT, *RANGER* and *RANGER* CREW are registered trademarks of POLARIS Industries Inc.

Copyright 2010 POLARIS Sales Inc. All information contained within this publication is based on the latest product information at the time of publication. Due to constant improvements in the design and quality of production components, some minor discrepancies may result between the actual vehicle and the information presented in this publication. Depictions and/or procedures in this publication are intended for reference use only. No liability can be accepted for omissions or inaccuracies. Any reprinting or reuse of the depictions and/or procedures contained within, whether whole or in part, is expressly prohibited.

The original instructions for this vehicle are in English. Other languages are provided as translations of the original instructions.

Printed in U.S.A.

2011 *RANGER* 800 4X4 / 6X6 / CREW Owner's Manual

P/N 9923125

TABLE OF CONTENTS

Introduction 4
Safety 7
Features and Controls 20
Operation 40
Emission Control Systems 56
Maintenance 57
Specifications 104
POLARIS Products 110
Troubleshooting 111
Declaration of Conformity 115
Warranty 116
Maintenance Log 123
Index 125

INTRODUCTION

The *RANGER* is an off-road vehicle. Familiarize yourself with all laws and regulations concerning the operation of this vehicle in your area.

The following signal words and symbols appear throughout this manual and on your vehicle. Your safety is involved when these words and symbols are used. Become familiar with their meanings before reading the manual.

The safety alert symbol indicates a potential personal injury hazard.

WARNING

A WARNING indicates a hazardous situation which, if not avoided, may result in death or serious injury.

CAUTION

A CAUTION indicates a hazardous situation which, if not avoided, may result in minor or moderate injury.

NOTICE

A NOTICE indicates a situation that may result in property damage.

The Prohibition Safety Sign indicates an action NOT to take in order to avoid a hazard.

The Mandatory Action Sign indicates an action that NEEDS to be taken to avoid a hazard.

INTRODUCTION

⚠ WARNING

Failure to follow the warnings contained in this manual can result in severe injury or death.

A POLARIS *RANGER* is not a toy and can be hazardous to operate. This vehicle handles differently than other vehicles, such as motorcycles and cars. A collision or rollover can occur quickly, even during routine maneuvers like turning, or driving on hills or over obstacles, if you fail to take proper precautions.

- Read this owner's manual. Understand all safety warnings, precautions and operating procedures before operating the vehicle. Keep this manual with the vehicle.
- This vehicle is an ADULT VEHICLE ONLY. NEVER operate this vehicle if you are under age 16 and NEVER operate without a valid driver's license.
- No person under the age of 12 may ride as a passenger in this vehicle. Any passenger must be able to comfortably reach the floor and hand holds.
- Never permit a guest to operate this vehicle unless the guest has read this manual and all product labels.
- Always use the cab nets while riding in this vehicle.
- Always keep hands and feet inside the vehicle at all times.

INTRODUCTION
Vehicle Identification Numbers

Record your vehicle's identification numbers and key number in the spaces provided. Remove the spare key and store it in a safe place. An ignition key can be duplicated only by ordering a POLARIS key blank (using your key number) and mating it with one of your existing keys. The ignition switch must be replaced if all keys are lost.

VIN (4X4, 6X6)

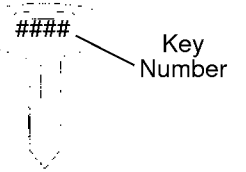

Engine Serial Number

VIN (CREW)

Vehicle Model Number: _____

Frame VIN: _____

Engine Serial Number: _____

Key Number _____

Safety Labels and Locations

Warning labels have been placed on the vehicle for your protection. Read and follow the instructions of the labels on the vehicle carefully. If any of the labels depicted in this manual differ from the labels on your vehicle, always read and follow the instructions of the labels *on the vehicle*.

If any label becomes illegible or comes off, contact your POLARIS dealer to purchase a replacement. Replacement *safety* labels are provided by POLARIS at no charge. The part number is printed on the label.

Container/Passenger/Tire Pressure Warning (4X4, 6X6)

WARNING

Remove flammable material containers from box before filling.

- Passengers can be thrown off. This can cause serious injury or death.
- Never carry passengers in cargo box.

Maximum 4X4 Box Load 1000 lbs. (455 kg)*

Maximum 6X6 Box Load 1250 lbs. (567 kg), Storage Box Load 250 lbs. (113 kg)

IMPROPER TIRE PRESSURE OR OVERLOADING can cause loss of control resulting in SEVERE INJURY OR DEATH.

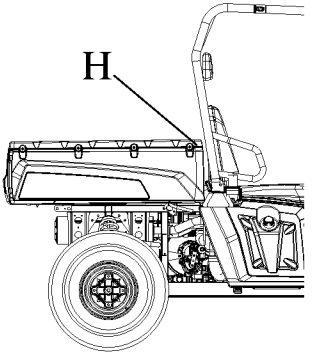

TIRE PRESSURE IN PSI (KPa):

RANGER - 4X4 FRONT 10 (69) REAR 10 (69)

RANGER - 6X6 FRONT 10 (69) CENTER 10 (69) REAR 10 (69)

MAXIMUM WEIGHT CAPACITY INCLUDES WEIGHT OF OPERATOR, PASSENGER, CARGO, AND ACCESSORIES.

RANGER 4X4 is 1500 LBS. (682 KG)*

RANGER 6X6 is 2000 LBS. (907 KG)

Reduce speed and allow greater distance for braking when carrying cargo. Overloading or carrying tall, off-center, or unsecured loads will increase your risk of losing control. Loads should be centered and carried as low as possible in box. For stability on rough or hilly terrain, reduce speed and cargo. Be careful if load extends over the side of the box.

Read Owner's Manual for more detailed loading information.

7176334

*** *RANGER* 4X4 models sold in California are designed and rated for a box capacity of 600 lbs. (272 kg). The maximum weight capacity for these vehicles is 1100 lbs. (499 kg).**

SAFETY
Safety Labels and Locations
Container/Passenger/Tire Pressure Warning (CREW)

WARNING

Remove flammable material containers from box before filling.

WARNING

Passengers can be thrown off. This can cause serious injury or death.

Never carry passengers in cargo box.

WARNING

Multi-Passenger Maximum Box Load 1000 lbs. (455 kg)

WARNING

IMPROPER TIRE PRESSURE OR OVERLOADING can cause loss of control resulting in SEVERE INJURY OR DEATH.

TIRE PRESSURE IN PSI (KPa):

MULTI-PASSENGER - FRONT 12 (83) REAR 16 (110)

MAXIMUM WEIGHT CAPACITY INCLUDES WEIGHT OF OPERATOR, PASSENGERS, CARGO, AND ACCESSORIES.

MULTI-PASSENGER is 1750 LBS. (795 KG)

Reduce speed and allow greater distance for braking when carrying cargo. Overloading or carrying tall, off-center, or unsecured loads will increase your risk of losing control. Loads should be centered and carried as low as possible in box. For stability on rough or hilly terrain, reduce speed and cargo. Be careful if load extends over the side of the box.

Read Owner's Manual for more detailed loading information.

7175214

Safety Labels and Locations

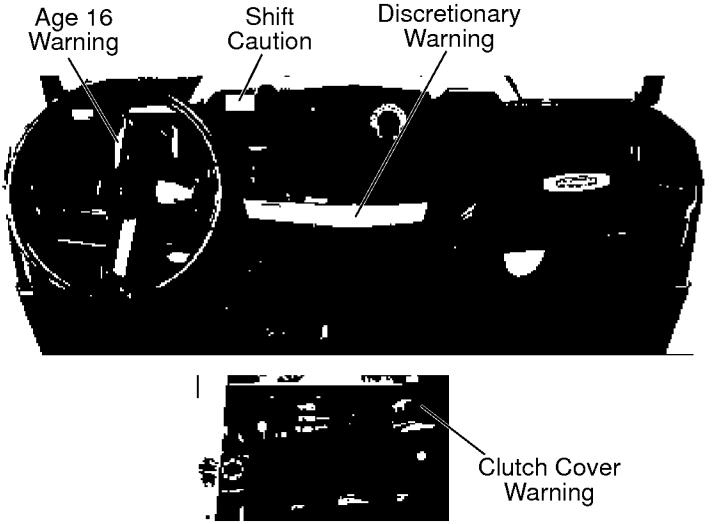

Clutch Cover Warning

WARNING

NO STEP

- Moving parts hazard under belt-clutch guard. To prevent serious injury, do not operate vehicle with guard removed.
- Do not modify engine or clutch. Doing so can cause part failure, possible imbalance, and excessive engine RPM which can result in serious injury or death.

7172563

Age 16 Warning

Operating this vehicle if you are under the age of 16 increases your chance of severe injury or death.

NEVER operate this vehicle if you are under age 16 and NEVER operate this vehicle without a valid driver's license.

7175566

Shift Caution

CAUTION

To avoid transmission damage, shift only when vehicle is stationary and at idle.

7172674

SAFETY
Safety Labels and Locations
Discretionary Warning (4X4/6X6)

WARNING

Improper vehicle use can result in Severe Injury or Death.

NEVER Operate:

- At speeds too fast for your skills or the conditions.
- After or while using Alcohol or Drugs.
- On hills steeper than 15 degrees ∠ 15°.
- On public roads, a collision can occur with a another vehicle.
- With more than two passengers, or passengers under age twelve or who cannot comfortably reach the floor and hand holds.
- On paved surfaces - pavement may seriously affect handling and control.
- With non-POLARIS approved accessories - they may seriously affect stability.

ALWAYS:

- Wear your seat belt. Vehicle rollover could cause severe injury or death.
- Wear a helmet and eye protection and keep hands and feet in vehicle at all times.
- Reduce speed and use extra caution when carrying passengers.
- Avoid sharp turns or turns while applying heavy throttle.
- Operate slowly in reverse - avoid sharp turns or sudden braking.
- Make sure passenger reads and understands all safety labels.
- Watch for branches or other hazards that could enter vehicle.

LOCATE AND READ OWNER'S MANUAL. FOLLOW ALL INSTRUCTIONS AND WARNINGS.

7176128

Safety Labels and Locations

Discretionary Warning (CREW)

WARNING

Improper vehicle use can result in SEVERE INJURY or DEATH.

NEVER Operate:

- At speeds too fast for your skills or the conditions.
- After or while using Alcohol or Drugs.
- On hills steeper than 15 degrees ∠ 15°.
- On public roads, a collision can occur with a another vehicle.
- With more than five passengers, or passengers under age twelve or who cannot comfortably reach the floor and hand holds.
- On paved surfaces - pavement may seriously affect handling and control.
- With non-POLARIS approved accessories - they may seriously affect stability.

ALWAYS:

- Wear your seat belt. Vehicle rollover could cause severe injury or death.
- Wear a helmet and eye protection and keep hands and feet in vehicle at all times.
- Reduce speed and use extra caution when carrying passengers.
- Avoid sharp turns or turns while applying heavy throttle.
- Operate slowly in reverse - avoid sharp turns or sudden braking.
- Make sure passenger reads and understands all safety labels.
- Watch for branches or other hazards that could enter vehicle.

LOCATE AND READ OWNER'S MANUAL. FOLLOW ALL INSTRUCTIONS AND WARNINGS

7176321

SAFETY
Operator Safety

⚠ WARNING

Serious injury or death can result if you do not follow these instructions and procedures, which are outlined in further detail within your owner's manual.

- Read this manual and all labels carefully. Follow the operating procedures described.
- Never allow anyone under age 16 to operate this vehicle and never allow anyone without a valid driver's license to operate this vehicle.
- Do not carry a passenger until you have at least two hours of driving experience with this vehicle.
- No person under the age of 12 may ride as a passenger in this vehicle. Any passenger must be able to comfortably reach the floor and hand holds.
- The driver and all passengers must wear helmet, eye protection and seat belt at all times.
- Always use the cab nets while riding in this vehicle.
- Always keep hands and feet inside the vehicle at all times.
- Always keep both hands on the steering wheel and both feet on the floorboards of the vehicle during operation.
- Never permit a guest to operate this vehicle unless the guest has read this manual and all product labels.
- To reduce tipover risk, be especially careful when encountering obstacles and slopes and when braking on hills or during turns.
- This vehicle is for off road use only. Never operate on public roads. Always avoid paved surfaces.
- Never consume alcohol or drugs before or while operating this vehicle.
- Never operate at excessive speeds. Always travel at a speed proper for the terrain, visibility and operating conditions, and your experience.
- Never attempt jumps or other stunts.

Operator Safety

- Always inspect the vehicle before each use to make sure it's in safe operating condition. Always follow the inspection procedures described in this manual.
- Always travel slowly and use extra caution when operating on unfamiliar terrain. Be alert to changing terrain.
- Never operate on excessively rough, slippery or loose terrain.
- Always follow proper procedures for turning. Practice turning at slow speeds before attempting to turn at faster speeds. Never turn at excessive speeds.
- Always have this vehicle checked by an authorized POLARIS dealer if it has been involved in an accident.
- Never operate this vehicle on hills too steep for the vehicle or for your abilities. Practice on smaller hills before attempting larger hills.
- Always follow proper procedures for climbing hills as described in this manual. Check the terrain carefully before attempting to climb a hill. Never climb hills with excessively slippery or loose surfaces. Never open the throttle suddenly or make sudden gear changes. Never go over the top of a hill at high speed.
- Always follow the proper procedures outlined in this manual for traveling downhill and for braking on hills. Check the terrain carefully before descending a hill. Never travel downhill at high speed. Avoid going downhill at an angle, which would cause the vehicle to lean sharply to one side. Travel straight down the hill where possible.
- Always check for obstacles before operating in a new area. Never attempt to operate over large obstacles such as rocks or fallen trees. Always follow the proper procedures outlined in this manual when operating over obstacles.
- Always be careful of skidding or sliding. On slippery surfaces such as ice, travel slowly and exercise caution to reduce the chance of skidding or sliding out of control.

SAFETY

Operator Safety

- Never operate your vehicle in fast-flowing water or in water deeper than that specified in this manual. Wet brakes may have reduced stopping ability. Test your brakes after leaving water. If necessary, apply them lightly several times to let friction dry out the pads.
- Always be sure there are no obstacles or people behind your vehicle when operating in reverse. When it's safe to proceed in reverse, move slowly. Avoid turning at sharp angles in reverse.
- Always use the proper size and type of tires specified in this manual. Always maintain proper tire pressure as specified on safety labels.
- Never modify this vehicle through improper installation or use of accessories.
- Never exceed the stated load capacity for this vehicle. Cargo should be properly distributed and securely attached. Reduce speed and follow the instructions in this manual for hauling cargo or pulling a trailer. Allow a greater distance for braking.
- Always engage the park brake before getting out of the vehicle. See page 27.
- Always apply the brakes before engaging or releasing the park brake.
- Always stop the engine before refueling. Remove flammable material containers from the box before filling them with fuel. Make sure the refueling area is well ventilated and free of any source of flame or sparks. Gasoline is extremely flammable. See page 17 for fuel safety warnings.
- Always remove the ignition key when the vehicle is not in use to prevent unauthorized use or accidental starting.

FOR MORE INFORMATION ABOUT SAFETY, call POLARIS at 1-800-342-3764.

Operator Safety

Equipment Modifications

We strongly recommend that consumers do not install on a POLARIS *RANGER* any equipment that may increase the speed or power of the vehicle, or make any other modifications to the vehicle for these purposes. Any modifications to the original equipment of the vehicle create a substantial safety hazard and increase the risk of bodily injury.

The warranty on your POLARIS *RANGER* is terminated if any equipment has been added to the vehicle, or if any modifications have been made to the vehicle, that increase its speed or power.

The addition of certain accessories, including (but not limited to) mowers, blades, tires, sprayers, or large racks, may change the handling characteristics of the vehicle. Use only POLARIS-approved accessories, and familiarize yourself with their function and effect on the vehicle.

SAFETY
Operator Safety

⚠ WARNING

Failure to operate the *RANGER* properly can result in a collision, loss of control, accident or overturn, which may result in serious injury or death. Heed all safety warnings outlined in this section of the owner's manual. See the OPERATION section of the owner's manual for proper operating procedures.

Age Restrictions

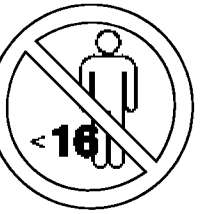

This vehicle is an ADULT VEHICLE ONLY. NEVER operate this vehicle if you are under age 16 and NEVER operate without a valid driver's license.

No person under the age of 12 may ride as a passenger in this vehicle. Any passenger must be able to comfortably reach the floor and hand holds.

Operating Without Instruction

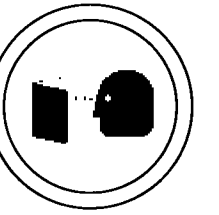

Operating this vehicle without proper instruction increases the risk of an accident. The operator must understand how to operate the vehicle properly in different situations and on different types of terrain.

All operators must read and understand the Owner's Manual and all warning and instruction labels before operating the vehicle.

Using Alcohol or Drugs

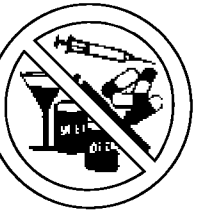

Operating the vehicle after consuming alcohol or drugs could adversely affect operator judgment, reaction time, balance and perception.

Never drink alcohol or use drugs or medications before or while operating this vehicle.

Seat Belts

Riding in this vehicle without wearing the seat belt increases the risk of serious injury in the event of an accident or sudden stop. Riders *must* wear seat belts at all times. Seat belts reduce the severity of injury in the event of a sudden stop or accident. Always make sure the seat belts are secured for both the operator and passenger before riding.

Operator Safety

Cab Nets

Riding in this vehicle without using the cab nets increases the risk of serious injury or death in the event of an accident or overturn. Always use the cab nets while riding in this vehicle. *Always keep hands and feet inside the vehicle at all times.*

Failure to Inspect Before Operating

Failure to inspect and verify that the vehicle is in safe operating condition before operating increases the risk of an accident. Always inspect your *RANGER* before each use to make sure it's in safe operating condition. Always follow all inspection and maintenance procedures and schedules described in the owner's manual.

Handling Gasoline

Gasoline is highly flammable and explosive under certain conditions.

- Always exercise extreme caution whenever handling gasoline.
- Always stop the engine when refueling.
- Always refuel outdoors or in a well ventilated area.
- Remove flammable material containers from the box before filling them with fuel.
- Do not smoke or allow open flames or sparks in or near the area where refueling is performed or where gasoline is stored.
- Do not overfill the tank. Do not fill the tank neck.
- If gasoline spills on your skin or clothing, immediately wash it off with soap and water and change clothing.

Exposure to Exhaust

Engine exhaust fumes are poisonous and can cause loss of consciousness or death in a short time. Never start the engine or let it run in an enclosed area.

The engine exhaust from this product contains chemicals known to cause cancer, birth defects or other reproductive harm. Operate this vehicle only outdoors or in well-ventilated areas.

Operating a Damaged Vehicle

Operating a damaged vehicle can result in an accident. After any overturn or accident, have a qualified service dealer inspect the entire machine for possible damage, including (but not limited to) brakes, throttle and steering systems.

SAFETY
Operator Safety

Operating at Excessive Speeds

Operating this vehicle at excessive speeds increases the operator's risk of losing control. Always operate at a speed that's appropriate for the terrain, the visibility and operating conditions, your skills and your passenger's skills.

Operating on Pavement

This vehicle's tires are designed for off-road use only, not for use on pavement. Operating this vehicle on paved surfaces (including sidewalks, paths, parking lots and driveways) may adversely affect the handling of the vehicle and could result in loss of control and accident or overturn. Avoid operating the vehicle on pavement. If it's unavoidable, travel slowly and avoid sudden turns or stops.

Operating on Public Roads

Operating this vehicle on public streets, roads or highways could result in a collision with another vehicle. Never operate this vehicle on any public street, road or highway, including dirt and gravel roads. In some areas it's unlawful to operate this vehicle on public streets, roads and highways.

Turning Improperly

Turning improperly could cause loss of traction, loss of control, accident or overturn. Always follow proper procedures for turning. Never turn abruptly or at sharp angles. Never turn at high speeds. Practice turning at slow speeds before attempting to turn at faster speeds.

Jumps and Stunts

Attempting wheelies, jumps and other stunts increases the risk of an accident or overturn. Never attempt wheelies, jumps, or other stunts. Avoid exhibition driving.

Operating in Unfamiliar Terrain

Failure to use extra caution when operating on unfamiliar terrain could result in an accident or overturn. Unfamiliar terrain may contain hidden rocks, bumps, or holes that could cause loss of control or overturn. Travel slowly and use extra caution when operating on unfamiliar terrain. Always be alert to changing terrain conditions.

Operating on Slippery Terrain

Failure to use extra caution when operating on excessively rough, slippery or loose terrain could cause loss of traction, loss of control, accident or overturn. Do not operate on excessively slippery surfaces. Always reduce speed and use additional caution when operating on slippery surfaces.

Operator Safety

Improper Hill Climbing

Climbing hills improperly can cause loss of control or vehicle overturn. Always follow proper procedures for climbing hills as described in the owner's manual. See page 46.

Stalling While Climbing a Hill

Stalling or rolling backwards while climbing a hill could cause an overturn. Always maintain a steady speed when climbing a hill.

If all forward speed is lost:

- Apply the brakes.
- Place the transmission in reverse and slowly allow the vehicle to roll straight downhill while applying light brake pressure to control speed.

If you begin rolling downhill:

- Never apply engine power.
- Apply the brakes gradually until the vehicle is fully stopped.
- Place the transmission in reverse and slowly allow the vehicle to roll straight downhill while applying light brake pressure to control speed.

Improper Tire Maintenance

Operating this vehicle with improper tires or with improper or uneven tire pressure could cause loss of control or accident. Always use the size and type of tires specified for your vehicle. Always maintain proper tire pressure as described in the owner's manual and on safety labels.

Operating on Frozen Bodies of Water

Severe injury or death can result if the vehicle and/or the operator fall through the ice. Never operate the vehicle on a frozen body of water unless you have first verified that the ice is sufficiently thick to support the weight and moving force of the vehicle, you and your passengers, and your cargo, together with any other vehicles in your party. Always check with local authorities and residents to confirm ice conditions and thickness over your entire route. Vehicle operators assume all risk associated with ice conditions on frozen bodies of water.

Unauthorized Use of the Vehicle

Leaving the keys in the ignition can lead to unauthorized use of the vehicle, which could result in an accident or overturn. Always remove the ignition key when the vehicle is not in use.

Hot Exhaust Systems

Exhaust system components are very hot during and after use of the vehicle. Hot components can cause burns and fire. Do not touch hot exhaust system components. Always keep combustible materials away from the exhaust system. Use caution when traveling through tall grass, especially dry grass.

FEATURES AND CONTROLS

Component Locations

Your vehicle is equipped with cab nets on both sides of the vehicle. Cab nets must be used by both operator and passengers at all times. Any illustrations without cab nets are only to allow component identification. Always use the cab nets.

Not all models come with all features. Refer to the specifications section beginning on page 104.

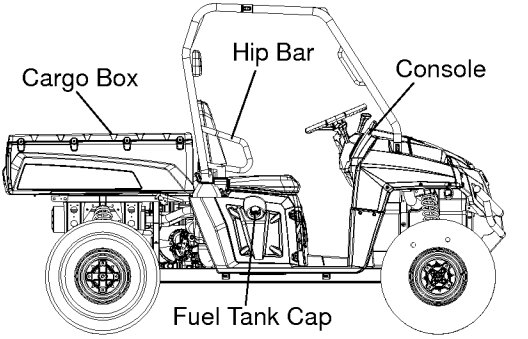

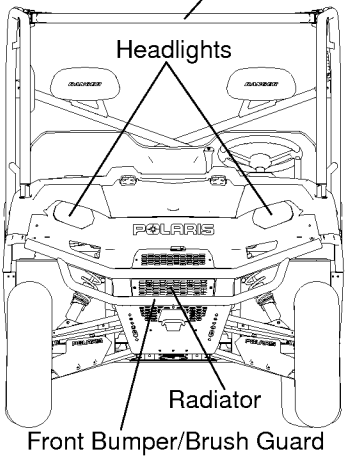

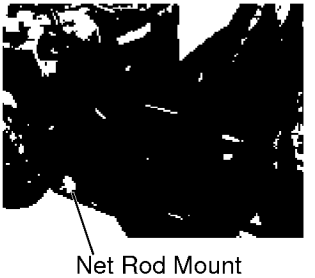

Component Locations

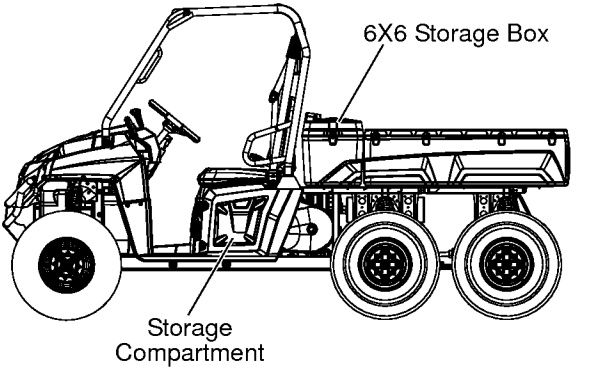

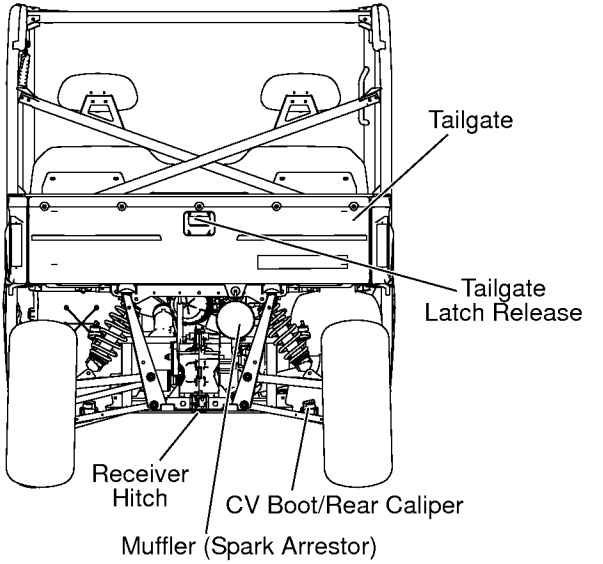

FEATURES AND CONTROLS

Console

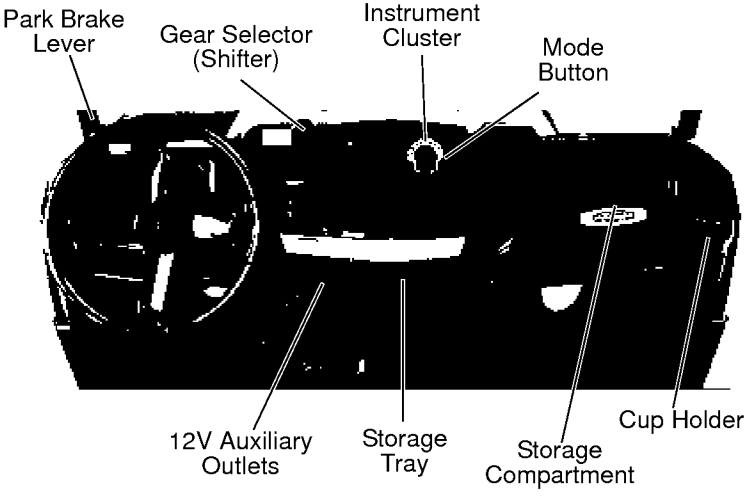

Auxiliary Outlets

The 12-volt receptacles have spade connections on the back that may be used to power an auxiliary light or other optional accessories or lights. The connections are behind the console, under the dash.

On CREW models, an additional receptacle is located on the rear of the driver's seat.

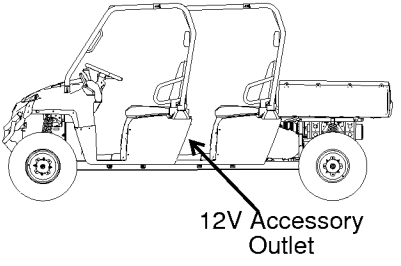

Console

Mode Button

The MODE button is located on the instrument cluster. Use the MODE button to toggle through mode options available in the instrument cluster. See pages 33-39.

Gear Selector

H: High Gear

L: Low Gear

N: Neutral

R: Reverse

Low gear is the primary driving range for the *RANGER*. High gear is intended for use on hard-packed surfaces with light loads.

To shift gears, brake to a complete stop. When the engine is idling, move the lever to the desired gear.

NOTICE: Shifting gears with the engine speed above idle or while the vehicle is moving could cause transmission damage. Always shift when the vehicle is stationary and the engine is at idle.

Tip: Maintaining shift linkage adjustment is important to assure proper transmission function. See your dealer if you experience any shifting problems.

FEATURES AND CONTROLS
Switches

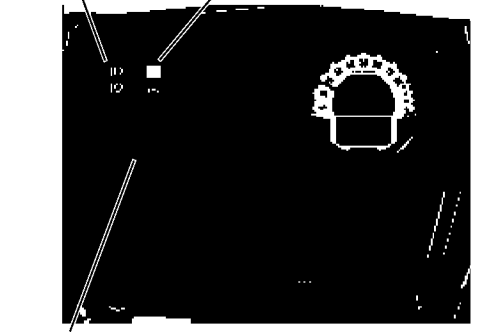

Ignition Switch

The ignition switch is a three-position, key-operated switch. The key can be removed from the switch when it is in the OFF position.

OFF	The engine is off. Electrical circuits are off, except Acc, 12V.
ON	Electrical circuits are on. Electrical equipment can be used.
START	Turn the key to the START position to engage the electric starter. The key returns to the ON position when released.

Light Switch

The ignition switch key must be in the ON/RUN position to operate the headlights. Press the top of the rocker switch toward the dash to place the headlights on high beam. Move the rocker switch to the center position to place the headlights on low beam. Press the bottom of the rocker switch to turn off the headlights.

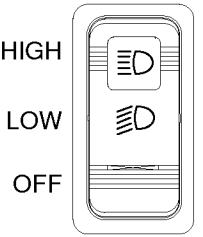

Switches

AWD/Differential Lock Switch

The AWD/Differential Switch has three positions:

- All Wheel Drive (AWD)
- Differential Lock (2WD)
- Differential Unlock

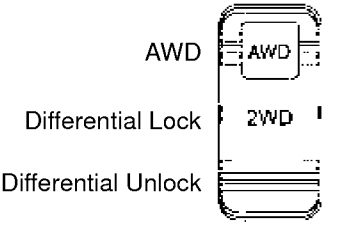

Press the top of the rocker switch to engage All Wheel Drive (AWD). See page 54 for operating instructions.

Move the rocker switch to the center position to lock the differential and operate in rear wheel drive. Press the bottom of the switch to unlock the differential and allow the two rear drive wheels to operate independently. See page 55 for differential lock operating instructions.

FEATURES AND CONTROLS

Trailer Hitch Bracket

This vehicle is equipped with a receiver hitch bracket for a trailer hitch. To avoid injury and property damage, always heed the warnings and towing capacities outlined on pages 50-52.

Brake Pedal

Depress the brake pedal to slow or stop the vehicle. Apply the brakes while starting the engine.

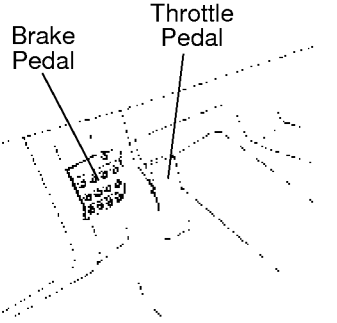

Throttle Pedal

Push the throttle pedal down to increase engine speed. Spring pressure returns the pedal to the rest position when released. Always check that the throttle pedal returns normally before starting the engine. Make sure there's adequate throttle pedal freeplay. See page 83 for throttle pedal adjustment procedures.

Adjustable Steering Wheel

The steering wheel can be tilted upward or downward for rider preference.

Lift and hold the adjustment lever toward you while moving the steering wheel upward or downward. Release the lever when the steering wheel is at the desired position.

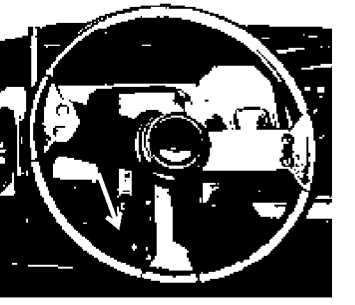

Park Brake Lever

To help prevent the vehicle from rolling, engage the park brake when parking the vehicle. When the park brake is fully engaged, "BRAKE" appears in the rider information display. Engine speed is limited to 1300 RPM in all gears, except neutral. If throttle is applied, this limiting feature prevents operation, which protects the park brake pads from excessive wear.

Tip: This feature will not operate properly if the park brake connector or switch (under the hood) malfunctions or becomes disconnected, or if the switch has moved. Check for disconnection, then see your dealer promptly if this feature fails to operate properly.

Inspect and adjust park brake cable tension after the first 25 hours of operation and every 100 hours thereafter to ensure proper cable tension. See page 86.

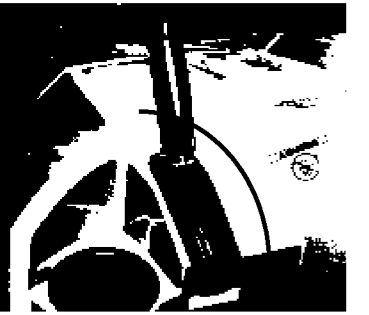

Always apply the service brakes before engaging or releasing the park brake.

1. Apply the brakes.
2. Pull the park brake lever downward as far as possible.
3. To release the park brake, apply the brakes. Press the park brake release inward and move the lever upward as far as possible.

WARNING! Operating the vehicle while the park brake is engaged could cause loss of control and result in serious injury or death. Always disengage the park brake before operating the vehicle.

FEATURES AND CONTROLS

Seat Removal

Pull up on the front of the seat and slide it toward the front of the vehicle. Install the seat by sliding the tabs into the rear of the seat base. Push down firmly on the front of the seat until the pins are fully seated into the grommets.

Fuel Cap

The fuel tank filler cap is located on the right-hand side of the vehicle near the passenger seat. When refueling, always use either leaded or unleaded gasoline with a minimum pump octane number of 87 R+M/2 octane. *Do not use fuel with ethanol content greater than 10 percent, such as E-85 fuel.*

Electronic Power Steering (EPS)

Electronic power steering (if equipped) engages when the ignition key is turned to the ON position. EPS remains engaged whether the vehicle is moving or idle. See page 33 for EPS Warning Indicator information.

Cab Nets

Riding in this vehicle without using the cab nets increases the risk of serious injury or death in the event of an accident or overturn. Cab nets must be used by both operator and passengers at all times. Make sure all latches are secure before operating the vehicle.

Always inspect cab nets for tightness, wear and damage before each use of the vehicle. Use the strap adjusters to tighten any loose straps. Promptly replace worn or damaged cab nets with new cab nets, available from your authorized Polaris dealer.

Securing a Net

1. After entering the vehicle, insert the lower net rod into the net mount on the floor. Make sure the ball at the end of the rod is properly secured in the mount.
2. Connect the latch at the top edge of the net to the receiver latch mounted on the front frame.

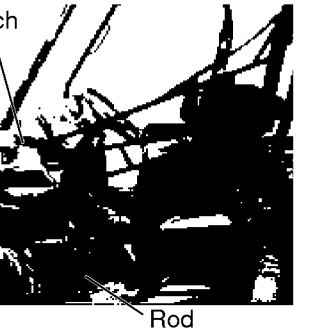

Opening a Net

1. To exit the vehicle, release the latch at the top front edge of the cab net.
2. Rotate the net rearward and pull upward on the lower net rod to remove it from the mount.
3. Allow the net to hang freely outside the vehicle while dismounting.

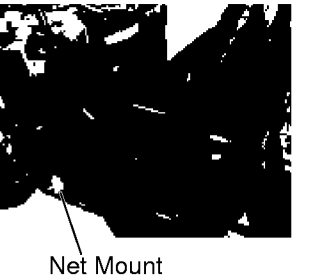

FEATURES AND CONTROLS

Seat Belts

This POLARIS vehicle is equipped with three-point lap and diagonal seat belts on all external seats.The center seat is equipped with a lap-style seat belt. Always make sure the seat belts are secured for all riders before operating.

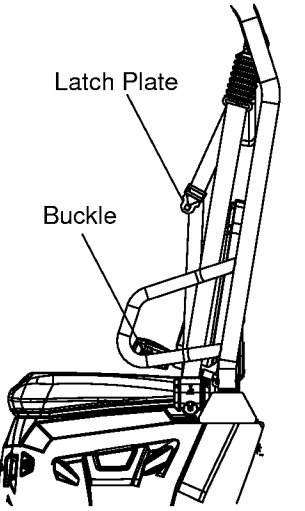

WARNING! Falling from a moving vehicle could result in serious injury or death. Always fasten your seat belt securely before operating or riding in the *RANGER*.

To wear the seat belt properly, follow this procedure:

1. For 3-point belts, pull the seat belt latch downward and across your chest toward the buckle at the inner edge of the seat. The belt should fit snugly across your hips and diagonally across your chest. Make sure the belt is not twisted. For lap style belts, place the belt across your lap as low on your hips as possible. Make sure that the belt is not twisted.
2. Push the latch plate into the buckle until it clicks.
3. Release the strap, it will self-tighten.

Tip: The center belt must be tightened manually by pulling on the strap.

4. To release the seat belt, press the square red button in the buckle's center.

Seat Belts

Seat Belt Inspection

Inspect all seat belts for proper operation before each use of the vehicle.

1. Push the latch plate into the buckle until it clicks. The latch plate must slide smoothly into the buckle. A click indicates that it's securely latched.
2. Push the red release latch in the middle of the buckle to make sure it releases freely.
3. Pull each seat belt completely out and inspect the full length for any damage, including cuts, wear, fraying or stiffness. If any damage is found, or if the seat belt does not operate properly, have the seat belt system checked and/or replaced by an authorized POLARIS dealer.
4. To clean dirt or debris from the seat belts, sponge the straps with mild soap and water. Do not use bleach, dye or household detergents.

FEATURES AND CONTROLS

Rollover Protective Structure (ROPS)

The Rollover Protective Structure (ROPS) on this vehicle meets OSHA 1928.53 rollover performance requirements. Always have your authorized POLARIS dealer thoroughly inspect the ROPS if it ever becomes damaged in any way.

No device can assure occupant protection in the event of a rollover. Always follow all safe operating practices outlined in this manual to avoid vehicle rollover.

WARNING! Vehicle rollover could cause severe injury or death. Always avoid operating in a manner that could result in vehicle rollover.

Storage Compartments

A storage compartment is located under the driver's seat, and on CREW models, under the left rear seat. On 6X6 models, a lockable storage box is located behind the ROPS. Always make sure the cover is securely latched before operating. The box is accessible from both sides of the vehicle.

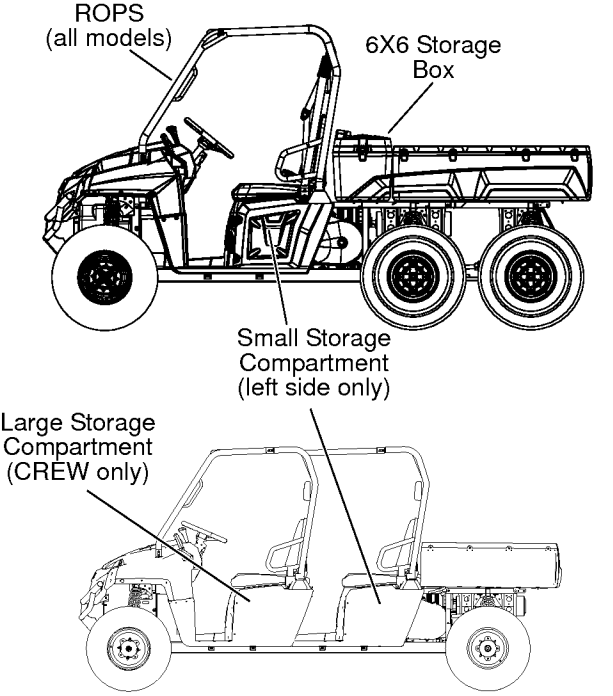

FEATURES AND CONTROLS

Instrument Cluster

High water pressure may damage components. Wash the vehicle by hand or with a garden hose using mild soap. Do not use alcohol to clean the instrument cluster. Do not allow insect sprays to contact the lens.

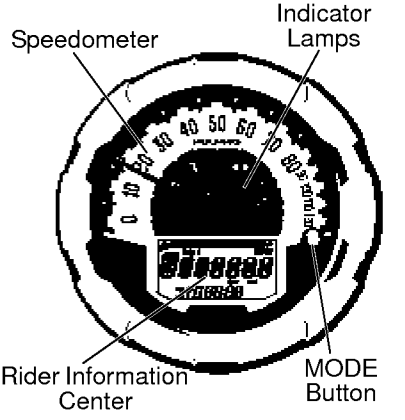

Speedometer

The speedometer displays vehicle speed in either miles per hour (MPH) or kilometers per hour (km/h). See page 36.

Indicator Lamps

Lamp	Indicates	Condition
MPH	Vehicle Speed	When standard mode is selected, speed displays in miles per hour.
KM/H		When metric mode is selected, speed displays in kilometers per hour.
	Over Temperature	This lamp illuminates to indicate an overheated engine. If the indicator flashes, the overheating condition remains, and the system will automatically reduce engine power.
	EPS Warning	This indicator illuminates briefly when the key is turned to the ON position. If the light remains on, the EPS system is inoperative. See your authorized POLARIS dealer for service.
N	Neutral	This lamp illuminates when the transmission is in neutral and the ignition key is in the ON position.
	High Beam	This lamp illuminates when the headlamp switch is set to high beam.
	Helmet/Seat Belt	This lamp flashes for several seconds when the key is turned to the ON position. The lamp is a reminder to the operator to ensure all riders are wearing helmets and seat belts before operating.
	Check Engine	This indicator appears if an EFI-related fault occurs. Do not operate the vehicle if this warning appears. Serious engine damage could result. See your dealer.

FEATURES AND CONTROLS

Instrument Cluster

Rider Information Center

The rider information center is located in the instrument cluster. All segments will light up for one second at start-up. If the instrument cluster fails to illuminate, a battery over-voltage may have occurred and the instrument cluster may have shut off to protect the electronic speedometer. If this occurs, take the vehicle to your POLARIS dealer for proper diagnosis.

The information center is set to display standard units of measurement and a 12-hour clock at the factory. To change to metric and/or a 24-hour clock, see page 37.

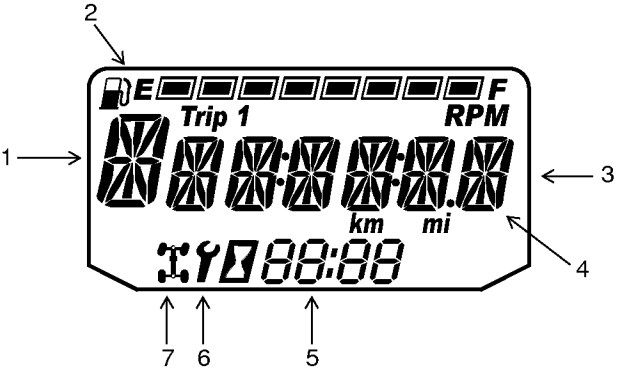

1. **Gear Indicator** - This indicator displays gear shifter position.
   H = High Gear
   L = Low Gear
   N = Neutral
   R = Reverse Gear
   -- = Gear Signal Error (or shifter between gears)

Instrument Cluster

Rider Information Center

2. **Fuel Gauge** - The segments of the fuel gauge show the level of fuel in the fuel tank. When the last segment clears, a low fuel warning is activated. All segments including the fuel icon will flash. Refuel immediately.

Tip: If the fuel icon fails to display, an open or short circuit has occurred in the fuel sensor circuit. See your dealer.

3. **Information Display Area** - This area displays odometer, trip meter, engine hour meter and programmable service hour interval.
4. **Under / Over Voltage** - This warning usually indicates that the vehicle is operating at an RPM too low to keep the battery charged. It may also occur when the engine is at idle and high electrical load (lights, cooling fan, accessories) is applied. Drive at a higher RPM or recharge the battery to clear the warning.
5. **Clock** - The clock displays time in a 12-hour or 24-hour format. See page 37 for resetting instructions.
6. **Service Indicator** - A flashing wrench symbol alerts the operator that the preset service interval has been reached. The vehicle should be brought to your dealer for scheduled maintenance. See page 37 for resetting instructions.
7. **4X4 Indicator** - This indicator illuminates when the 4X4 system is engaged (switch is on 4X4).

FEATURES AND CONTROLS

Instrument Cluster

Rider Information Center

Use the MODE button to toggle through the information area options.

Display Units (Standard/Metric)

The display can be changed to display either standard or metric units of measurement.

Tip: To exit the set-up mode at any time, wait 10 seconds.The display automatically exits and returns to the odometer display.

	Standard Display	Metric Display
Distance	Miles	Kilometers
Fuel	U.S. Gallons	Liters, Imperial Gallons
Temperature	Fahrenheit	Celsius
Time	12-Hour Clock	24-Hour Clock

1. Turn the key to the OFF position.
2. Press and *hold* the MODE button while turning the key to the ON position.
3. When the display flashes the distance setting, tap the MODE button to advance to the desired setting.
4. Press and *hold* the MODE button to save the setting and advance to the next display option.
5. Repeat the procedure to change remaining display settings.

Instrument Cluster

Rider Information Center

Clock Mode

Tip: The clock must be reset any time the battery has been disconnected or discharged.

1. Turn the key to the ON position. Use the MODE button to toggle to the odometer display.
2. Press and *hold* the MODE button until the hour segment flashes. Release the button.
3. With the segment flashing, tap the MODE button to advance to the desired setting.
4. Press and *hold* the MODE button until the next segment flashes. Release the button.
5. Repeat steps 3-4 twice to set the 10-minute and 1-minute segments. After completing the 1-minute segment, step 4 will save the new settings and exit the clock mode.
6. Turn the key to the OFF position.

Odometer Mode

The odometer records and displays the distance traveled by the vehicle.

Trip Meter Mode

The trip meter records the distance traveled by the vehicle if reset before each trip. To reset, select the trip meter mode. Press and hold the MODE button until the meter resets to zero. In the Rider Information Center, the trip meter display contains a decimal point, but the odometer displays without a decimal point.

Hour Meter Mode

This mode logs the total hours the engine has been in operation.

Tachometer Mode

The engine RPM is displayed digitally.

Tip: Small fluctuations in the RPM from day to day may be normal because of changes in humidity, temperature and elevation.

FEATURES AND CONTROLS

Instrument Cluster

Rider Information Center

Programmable Service Interval

When the hours of engine operation equal the programmed service interval setting, the wrench icon will flash for 5 seconds each time the engine is started. When this feature is enabled, it provides a convenient reminder to perform routine maintenance. The service interval is programmed at 50 hours at the factory. Use the following procedure to change the service interval.

1. Press the MODE button until remaining service hours display.
2. Press and hold the MODE button.
3. When the service hours flash, press and release the MODE button to advance the hours to the desired setting (including OFF). Press and hold the MODE button to set the new service hour interval.

Diagnostic Display Mode

The EFI diagnostic display mode is for informational purposes only. Please see your POLARIS dealer for all major repairs.

The diagnostic mode is accessible only when the check engine warning indicator activates after the key has been turned on. Leave the key on if you want to view the active code (failure code).

The diagnostic mode becomes inaccessible if the key is turned off and on and the warning indicator is no longer active. This allows the determination of persistent as well as intermittent faults.

Inactive codes are stored in the history of the unit.

Instrument Cluster

Rider Information Center

Engine Error Codes

The error screen displays only when the CHECK ENGINE light is on or when it goes on and off during one ignition cycle. Error codes are not stored. When the key is turned OFF, the code and message is lost, but will reappear if the fault reoccurs after restarting the engine.

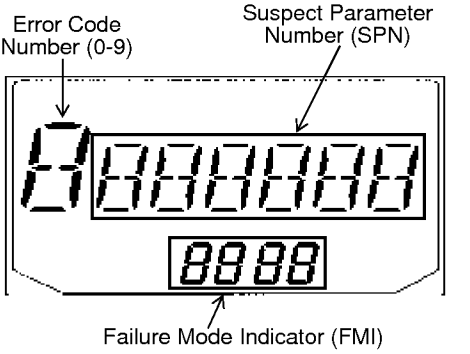

If the CHECK ENGINE light illuminates, retrieve the error codes from the display.

1. If the error codes are not displayed, use the MODE button to toggle until “Ck ENG” displays on the main line of the display.
2. Press and hold the MODE button to enter the diagnostics code menu.
3. Record the three numbers displayed in the gear position, clock and odometer displays.
4. Press the MODE button to advance to the next error code.
5. Press and hold the MODE button to exit the diagnostics code menu.
6. See an authorized POLARIS dealer for code details and diagnosis.

OPERATION

⚠ WARNING

Failure to operate the vehicle properly can result in a collision, loss of control, accident or overturn, which may result in serious injury or death. Read and understand all warnings outlined in the safety section of this manual.

Break-In Period

The break-in period for your new *RANGER* is the first twenty hours of operation, or the time it takes to use the first two tanks full of fuel. No single action on your part is as important as a proper break-in period. Careful treatment of a new engine will result in more efficient performance and longer life for the engine. Perform the following procedures carefully.

NOTICE: Excessive heat build-up during the first three hours of operation will damage close-fitted engine parts. Do not operate at full throttle or high speeds for extended periods during the first three hours of use.

Engine and Drivetrain Break-in

1. Fill the fuel tank with fuel. Review the fuel warnings on page 17.
2. Check the oil level. Add the recommended oil as needed to maintain the oil level in the normal (safe) operating range.
3. Drive slowly at first. Select an open area that allows room to familiarize yourself with vehicle operation and handling.
4. Vary throttle positions. Do not operate at sustained idle.
5. Perform regular checks on fluid levels, controls and areas outlined on the daily pre-ride inspection checklist. See page 41. During the break-in period, change both the oil and the filter at 25 hours.
6. Pull only light loads.
7. Inspect and adjust park brake cable tension after the first 25 hours of operation and every 100 hours thereafter to ensure proper cable tension. See page 86.

PVT Break-in (Clutches/Belt)

A proper break-in of the clutches and drive belt will ensure a longer life and better performance. Break in the clutches and belt by operating at slower speeds during the break-in period as recommended. Pull only light loads. Avoid aggressive acceleration and high speed operation during the break-in period.

Pre-Ride Inspection

Failure to inspect and verify that the vehicle is in safe operating condition before operating increases the risk of an accident. Always inspect the vehicle before each use to make sure it's in safe operating condition.

Item	Remarks	Page
Brake system/pedal travel	Ensure proper operation	26 84
Brake fluid	Ensure proper level	84
Front suspension	Inspect, lubricate if necessary	61
Rear suspension	Inspect, lubricate if necessary	61
Steering	Ensure free operation	86
Tires	Inspect condition and pressure	88
Wheels/fasteners	Inspect, ensure fastener tightness	88
Frame nuts, bolts, fasteners	Inspect, ensure tightness	-
Fuel and oil	Ensure proper levels	35 63
Coolant level	Ensure proper level	74 75
Coolant hoses	Inspect for leaks	-
Throttle	Ensure proper operation	82
Indicator lights/switches	Ensure operation	24
Air filter, pre-filter	Inspect, clean	79
Air box sediment tube	Drain deposits whenever visible	79
Headlamp	Check operation, apply POLARIS dielectric grease when lamp is replaced	90
Brake light/tail lamp	Check operation, apply POLARIS dielectric grease when lamp is replaced	90
Seat Belts	Check length of belt for damage, check latches for proper operation	31
Cab Nets	Check for wear or damage, ensure proper installation	29

OPERATION

Starting the Engine

1. Always start the engine outdoors or in a well-ventilated area.
2. Sit in the driver's seat and fasten the seat belt. Secure the cab nets.
3. Apply the brakes. Engage the park brake.
4. Shift the transmission to neutral.
5. Do not press the throttle pedal while starting the engine. Turn the ignition key past the ON/RUN position to START. Engage the starter for a maximum of five seconds. Release the key when the engine starts.
6. If the engine does not start within five seconds, release the ignition switch and wait five seconds. Repeat steps 5 and 6 until the engine starts.
7. Vary the engine RPM slightly with the throttle to aid in warm up until the engine idles smoothly.

NOTICE: Operating the vehicle immediately after starting could cause engine damage. Allow the engine to warm up for several minutes before operating the vehicle.

Stopping the Engine

1. Release the throttle pedal completely and brake to a complete stop.
2. Turn the engine off.
3. Engage the park brake.

WARNING! A rolling vehicle can cause serious injury. Always engage the park brake after stopping the engine.

Braking

1. Release the throttle pedal completely.
2. Press on the brake pedal evenly and firmly.
3. Practice starting and stopping (using the brakes) until you're familiar with the controls.

Tip: When the throttle pedal is released completely and the engine speed drops near an idle, the vehicle has no engine braking.

Driving Procedure

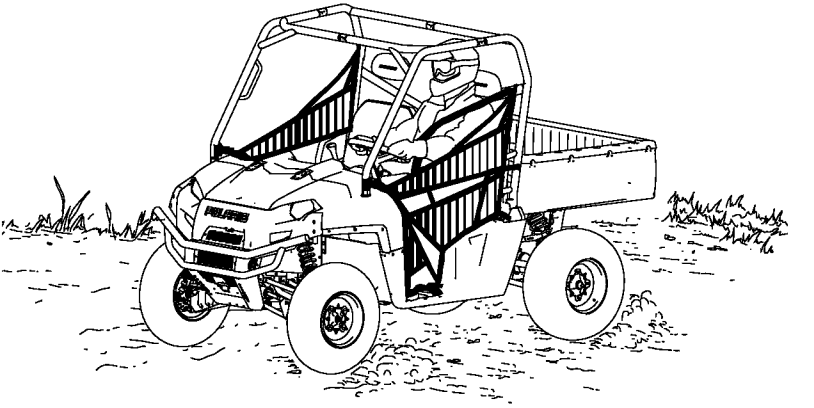

1. Wear a helmet and eye protection.
2. Perform the pre-ride inspection. See page 41.
3. Sit in the driver's seat and fasten the seat belt.
4. Always use the cab nets while riding in this vehicle.
5. Start the engine and allow it to warm up.
6. Apply the service brakes and shift the transmission into gear.
7. Check your surroundings and determine your path of travel.
8. Release the park brake.
9. Keeping both hands on the steering wheel, slowly release the brakes and depress the throttle with your right foot to begin driving.
10. Drive slowly. Practice maneuvering and using the throttle and brakes on level surfaces.
11. Do not carry a passenger until you have at least two hours of driving experience with this vehicle.

OPERATION

Driving with a Passenger

1. Perform the pre-ride inspection. See page 41.
2. Make sure all passengers are at least 12 years of age and tall enough to comfortably and safely sit in a passenger seat with the seat belt secured, put both feet on the floor and grasp the hand hold.
3. Make sure all passengers are wearing an approved helmet and eye protection.
4. Make sure all passengers secure their seat belt.
5. Make sure all cab nets are properly secured.
6. Do not carry more than the recommended number of passengers for your vehicle. See pages 7-8.
7. Allow a passenger to ride only in a passenger seat.
8. Slow down. Always travel at a speed appropriate for your skills, your passengers' skills, and operating conditions. Avoid unexpected or aggressive maneuvers that could cause discomfort or injury to a passenger.
9. Vehicle handling may change with a passenger and/or cargo on board. Allow more time and distance for braking.
10. Always follow all operating guidelines as outlined on safety labels and in this manual.

Driving on Slippery Surfaces

⚠ WARNING

Skidding or sliding can cause loss of control or overturn (if tires regain traction unexpectedly). When operating on slippery surfaces such as ice or loose gravel, reduce speed and use extra caution to reduce the chance of skidding or sliding out of control. Do not operate on excessively slippery surfaces.

Whenever riding on slippery surfaces such as wet trails or loose gravel, or during freezing weather, follow these precautions:

1. Do not operate on excessively rough, slippery or loose terrain.
2. Slow down before entering slippery areas.
3. Maintain a high level of alertness, reading the trail and avoiding quick, sharp turns, which can cause skids.
4. Engage all-wheel drive before wheels begin to lose traction.

NOTICE: Severe damage to the drive train may occur if the AWD is engaged while the wheels are spinning. Always allow the wheels to stop spinning before engaging AWD.

5. Correct a skid by turning the steering wheel in the direction of the skid. *Never apply the brakes during a skid.*

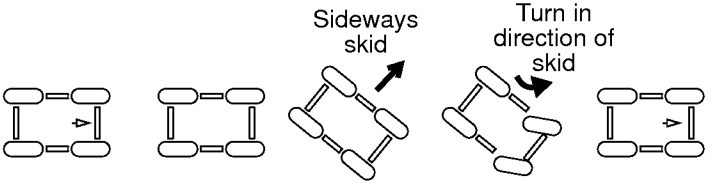

OPERATION

Driving Over Obstacles

Follow these precautions when operating over obstacles:

1. Always check for obstacles before operating in a new area.
2. Look ahead and learn to read the terrain. Be constantly alert for hazards such as logs, rocks and low hanging branches.
3. Travel slowly and use extra caution when operating on unfamiliar terrain. Not all obstacles are immediately visible.

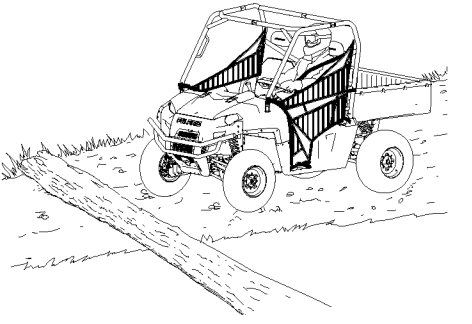

Driving Uphill

Whenever traveling uphill, follow these precautions:

1. Always travel straight uphill.
2. Avoid steep hills (15° maximum).
3. Keep both feet on the floor.
4. Always check the terrain carefully before ascending any hill.
5. Never climb hills with excessively slippery or loose surfaces.

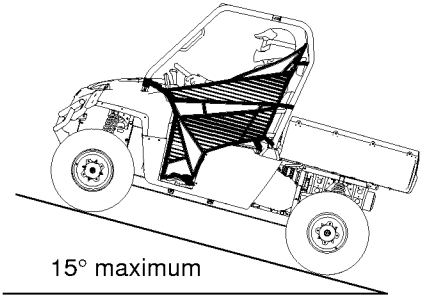

6. Proceed at a steady rate of speed and throttle opening. Never open the throttle suddenly.
7. Never go over the crest of a hill at high speed. An obstacle, a sharp drop, or another vehicle or person could be on the other side of the hill.

Driving on a Sidehill (Sidehilling)

Driving on a sidehill is not recommended. Improper procedure could cause loss of control or overturn. Avoid crossing the side of any hill unless absolutely necessary.

If crossing a sidehill is *unavoidable*, follow these precautions:

1. Slow down.
2. Exercise extreme caution.
3. Avoid crossing the side of a steep hill (15° maximum).

Driving Downhill

When driving downhill, follow these precautions:

1. Avoid steep hills (15° maximum).
2. Drive straight downhill. Avoid descending a hill at an angle, which would cause the vehicle to lean sharply to one side. Travel straight downhill when possible.
3. Slow down.
4. Apply the brakes *slightly* to aid in slowing.

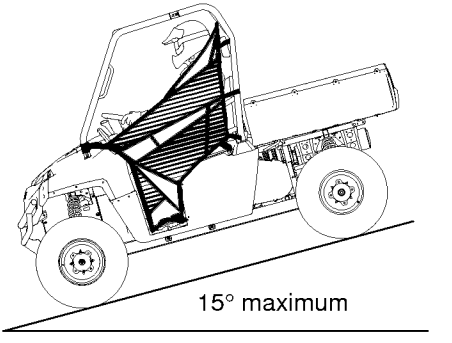

OPERATION
Driving Through Water

Your POLARIS *RANGER* can operate through water up to a maximum recommended depth equal to the floorboards.

NOTICE: Immersion can result in major damage if the vehicle isn't serviced correctly and promptly. After immersion, always take the vehicle to your dealer service. Do not start the engine! If it's impossible to bring the vehicle to your dealer before starting the engine, perform the service outlined on page 78, and take the vehicle to your dealer at the first opportunity.

Follow these procedures when operating through water:

1. Determine water depths and current before entering water.
2. Choose a crossing where both banks have gradual inclines.
3. Proceed slowly, avoiding rocks and obstacles.
4. Avoid operating through deep or fast-flowing water.

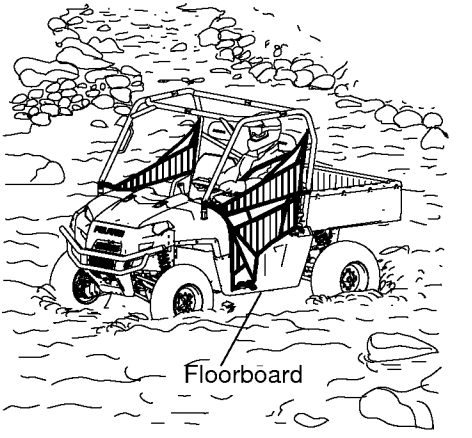

WARNING! The large tires on your *RANGER* may cause the vehicle to float in deep or fast-flowing water, which could result in loss of control and lead to serious injury or death. Never cross deep or fast-flowing water with your *RANGER*.

5. After leaving water, always dry the brakes by applying light pressure to the pedal repeatedly until braking action is normal.

NOTICE: After running your vehicle in water, it's critical that you perform the services outlined in the Periodic Maintenance Chart beginning on page 57. Give special attention to engine oil, transmission oil, all gearcase fluids, and all grease fittings.

Driving in Reverse

Follow these precautions when operating in reverse:

1. Always check for obstacles or people behind the vehicle. Always inspect left and right fields of vision before backing.
2. Always avoid backing downhill.
3. Back slowly.
4. Apply the brakes *lightly* for stopping.
5. Avoid turning at sharp angles.
6. Never open the throttle suddenly.

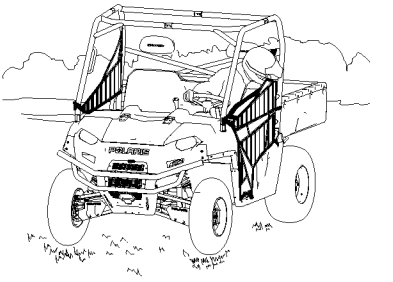

Parking the Vehicle

1. Apply the brakes. Stop the vehicle on a level surface.
2. When parking inside a garage or other structure, be sure that the structure is well ventilated and that the vehicle is not close to any source of flame or sparks, including any appliance with pilot lights.
3. Turn the engine off.
4. Engage the park brake.
5. Remove the ignition switch key to prevent unauthorized use.

Parking on an Incline

Avoid parking on an incline if possible. If it's unavoidable, follow these precautions:

1. Apply the brakes.
2. Place the transmission in gear.
3. Engage the park brake.
4. Turn the engine off.
5. Block the rear wheels on the downhill side.

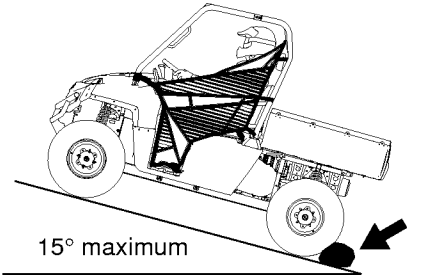

OPERATION
Hauling Cargo

⚠ WARNING

Hauling cargo improperly can alter vehicle handling and may cause loss of control or brake instability, which can result in serious injury or death. Always follow these precautions when hauling cargo:

Never exceed the maximum weight capacity of the vehicle. When determining the weight you are adding to the vehicle, include the weight of the operator, passenger, accessories, loads in the rack or box and the load on the trailer tongue. The combined weight of these items must not exceed the maximum weight capacity.

REDUCE SPEED AND ALLOW GREATER DISTANCES FOR BRAKING WHEN HAULING CARGO.

Always load the cargo box with the load as far forward and as low as possible.

When operating over rough or hilly terrain, reduce speed and cargo to maintain stable driving conditions.

Always operate the vehicle with extreme care when hauling or towing loads.

Slow down and drive in the lowest gear available.

SECURE ALL LOADS BEFORE OPERATING. Unsecured loads can create unstable operating conditions, which could result in loss of control of the vehicle.

OPERATE ONLY WITH STABLE AND SAFELY ARRANGED LOADS. When handling off-centered loads that cannot be centered, securely fasten the load and operate with extra caution. Always attach the tow load to the hitch point designated for your vehicle.

HEAVY LOADS CAN CAUSE BRAKING AND CONTROL PROBLEMS. Use extreme caution when applying brakes with a loaded vehicle. Avoid terrain or situations that may require backing downhill.

USE EXTREME CAUTION when operating with loads that extend over the rack sides. Stability and maneuverability may be adversely affected, causing the vehicle to overturn.

DO NOT TRAVEL FASTER THAN THE RECOMMENDED SPEEDS. Vehicle should never exceed 10 mph (16 kph) while towing a load on a level grass surface. Vehicle speed should never exceed 5 mph (8 kph) when towing loads in rough terrain, while cornering, or while ascending or descending a hill.

Hauling Cargo

The *RANGER* has been designed to carry or tow specific capacities. Always read and understand the load distribution warnings listed on the warning labels. The total load (operator, passenger, accessories, cargo and weight on hitch) must not exceed the maximum weight capacity of the vehicle. Never exceed the following capacities.

Model	Maximum Total Weight Capacity (Level Ground)	Maximum Cargo Box Weight Capacity
RANGER 4X4	1500 lbs. (681 kg) *	1000 lbs. (454 kg)*
RANGER 6X6	2000 lbs. (907 kg)	1250 lbs. (567 kg) Cargo Box 250 lbs. (113 kg) Storage Box
RANGER CREW	1750 lbs. (794 kg)	1000 lbs. (454 kg)

WARNING! Driving with passengers in the cargo box can result in severe injury or death. Never allow passengers to ride in the cargo box. Passengers must always ride in the cab with seat belts fastened securely.

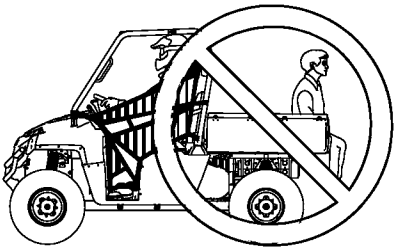

*** *RANGER* 4X4 models sold in California are designed and rated for a box capacity of 600 lbs. (272 kg). The maximum weight capacity for these vehicles is 1100 lbs. (499 kg).**

OPERATION

Towing Loads

Towing improperly can alter vehicle handling and may cause loss of control or brake instability. Always follow these precautions when towing:

1. Never load more than 150 lbs. (68.1 kg) tongue weight on the towing bracket.
2. Do not operate the vehicle faster than 10 mph (16 km/h) when towing. See page 50. Towing a trailer increases braking distance.
3. Do not tow more than the recommended weight for the vehicle. See the towing capacity chart below and the specifications charts beginning on page 104.
4. Attach a trailer to the trailer hitch bracket only. Do not attach a trailer to any other location or you may lose control of the vehicle.
5. Never tow a trailer on a grade steeper than 15°.

Model	Total Towed Load Weight (Level Ground)	Total Towed Load Weight (15° grade)	Total Hitch Vertical Weight	Maximum Towing Speed
RANGER 4x4	2000 lbs. (907 kg)	850 lbs. (386 kg)	150 lbs. (68.1 kg)	10 mph (16 kph)
RANGER 6x6	2000 lbs. (907 kg)	850 lbs. (386 kg)	150 lbs. (68.1 kg)	10 mph (16 kph)
RANGER CREW	2000 lbs. (907 kg)	850 lbs. (386 kg)	150 lbs. (68.1 kg)	10 mph (16 kph)

Belt Life

To extend belt life, use the lowest gear possible when hauling or towing heavy cargo.

Dumping the Cargo Box

1. Select a level site to dump the cargo box. Do not attempt to dump or unload the vehicle while parked on an incline.
2. Apply the brakes.
3. Place the transmission in gear.
4. Engage the park brake.
5. Dismount the vehicle.
6. Ensure that the cargo is positioned evenly or toward the front of the cargo box.
7. Release the tailgate by pulling up on the tailgate latch.

WARNING! If the weight distribution on the box is located toward the rear of the box when the release lever is pulled forward, the box may dump unexpectedly and cause serious injury to the operator or bystanders. Never operate the dump lever without ensuring that the load is positioned evenly or at the front of the box.

8. Stand clear and pull up on the cargo box release lever.
9. Lift the front of the cargo box to dump the cargo.
10. Lower the cargo box and push down securely to latch.

WARNING! Operating the vehicle while the cargo box is raised could result in severe injury. The box could close unexpectedly and cause injury to the driver or passenger. The rear tires will also catch the rear of a raised box, damaging the vehicle and creating hazardous driving conditions. Never operate this vehicle with the cargo box in the raised position.

OPERATION

All Wheel Drive (AWD)

Engaging AWD

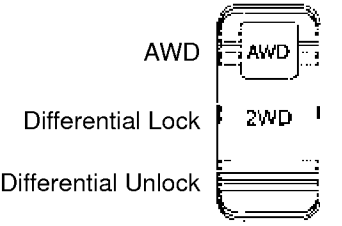

Press the top of the switch to engage All Wheel Drive (AWD). The 4X4 indicator illuminates in the rider information center to indicate that the vehicle is in AWD. See page 35.

When the AWD switch is on, the front wheels will automatically engage any time the rear wheels lose traction. When the rear wheels regain traction, the front wheels will automatically disengage. There is no limit to the length of time the vehicle may remain in AWD.

Tip: The AWD switch may be turned on or off while the vehicle is moving.

Engage the AWD before getting into conditions where front wheel drive may be needed. If the rear wheels are spinning, release the throttle before switching to AWD.

NOTICE: Switching to AWD while the rear wheels are spinning may cause severe drive shaft and clutch damage. Always switch to AWD while the rear wheels have traction or are at rest.

Disengaging AWD

Move the AWD switch to the center or bottom position to disengage AWD. If the switch is turned off while the front hubs are driving, they will not release until the rear wheels regain traction.

In some situations, the front gearcase may remain locked after turning the AWD switch off. If this occurs, you may notice increased steering effort and some vehicle speed restriction. Perform the following procedure to unlock the front gearcase.

1. Stop the vehicle.
2. Operate in reverse for at least 10 feet (3 m).
3. Stop completely.
4. Shift into low gear and drive forward.
5. If the front gearcase remains locked after following these instructions, see your dealer for service.

All Wheel Drive (AWD)

Locking the Differential

NOTICE: Damage to the differential can occur if it is engaged while the vehicle is traveling at high speeds or while the rear wheels are spinning. Slow the vehicle to nearly stopped before engaging the differential.

Locking the differential in slippery or low traction conditions helps improve traction. Move the rocker switch to the center position (2WD) to lock the differential and operate in rear wheel drive. On 6X6 models, *all four rear wheels will be drive wheels.*

Press the bottom of the switch to unlock the differential and allow the rear drive wheels to operate independently. This mode of operation is well suited to turf driving or whenever aggressive traction is not required. On 6X6 models, *the center wheels will remain drive wheels.*

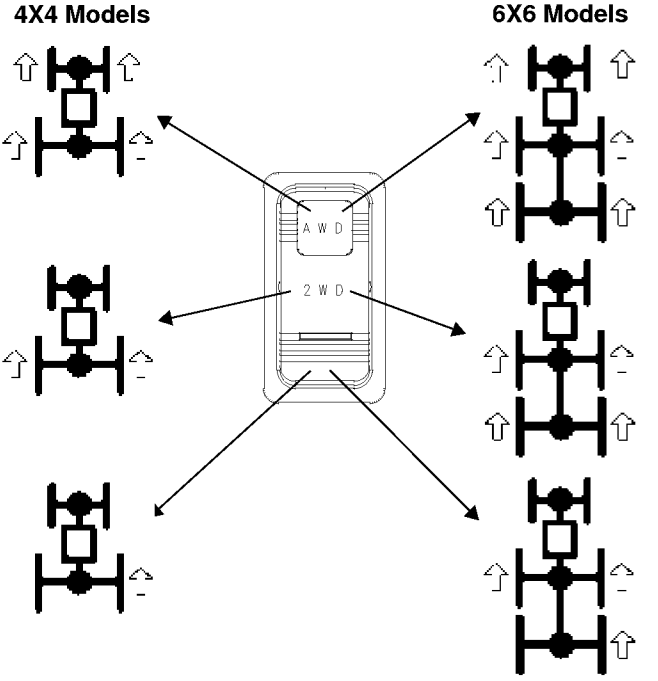

EMISSION CONTROL SYSTEMS

Noise Emission Control System

Do not modify the engine, intake or exhaust components, as doing so may affect compliance with U.S.A. EPA noise control requirements (40 CFR 205) and local noise level requirements.

Operation on Public Lands in the U.S.A.

Your POLARIS vehicle has a spark arrestor that was tested and qualified to be in accordance with the USFS standard 5100-1c. Federal law requires that this spark arrestor be installed and functional when the vehicle is operated on public lands.

Operation of off-road vehicles on public lands in the U.S.A. is regulated by 43 CFR 420. Violations are subject to monetary penalties. Federal regulations can be viewed online at www.gpoaccess.gov/ecfr/.

Crankcase Emission Control System

This engine is equipped with a closed crankcase system. Blow-by gases are forced back to the combustion chamber by the intake system. All exhaust gases exit through the exhaust system.

Exhaust Emission Control System

Exhaust emissions are controlled by engine design. An electronic fuel injection (EFI) system controls fuel delivery. The engine and EFI components are set at the factory for optimal performance and are not adjustable.

The emissions label is located on the frame under the seat.

Electromagnetic Interference

This spark ignition system complies with Canadian ICES-002.

This vehicle complies with the EMC requirements of European directives 97/24/EC and 2004/108/EC.

Non-ionizing Radiation: This vehicle emits some electromagnetic energy. People with active or non-active implantable medical devices (such as heart monitoring or controlling devices) should review the limitations of their device and the applicable electromagnetic standards and directives that apply to this vehicle.

Periodic Maintenance Chart

Careful periodic maintenance will help keep your vehicle in the safest, most reliable condition. Inspection, adjustment and lubrication of important components are explained in the periodic maintenance chart.

Inspect, clean, lubricate, adjust and replace parts as necessary. When inspection reveals the need for replacement parts, use genuine POLARIS parts available from your POLARIS dealer.

Record maintenance and service in the Maintenance Log beginning on page 123.

Tip: Service and adjustments are important for proper vehicle operation. If you're not familiar with safe service and adjustment procedures, have a qualified dealer perform these operations.

Maintenance intervals in the following chart are based upon average riding conditions and an average vehicle speed of approximately ten (10) miles per hour. Vehicles subjected to severe use must be inspected and serviced more frequently.

Severe Use Definition

- Frequent immersion in mud, water or sand
- Racing or race-style high RPM use
- Prolonged low speed, heavy load operation
- Extended idle
- Short trip cold weather operation

Pay special attention to the oil level. A rise in oil level during cold weather can indicate contaminants collecting in the oil sump or crankcase. Change oil immediately if the oil level begins to rise. Monitor the oil level, and if it continues to rise, discontinue use and determine the cause or see your dealer.

MAINTENANCE
Periodic Maintenance Chart
Maintenance Chart Key

▶ Perform these operations more often for vehicles subjected to severe use.

E Emission-related service (Failure to conduct this maintenance will not void the emissions warranty but may affect emissions.)

n Have an authorized POLARIS dealer perform these services.

WARNING! Improperly performing the procedures marked with a n could result in component failure and lead to serious injury or death. Have an authorized POLARIS dealer perform these services.

Perform all services at whichever maintenance interval is reached first.

Item		Maintenance Interval (whichever comes first)			Remarks
		Hours	Calendar	Miles (Km)	
n	Steering	-	Pre-Ride	-	Make adjustments as needed. See Pre-Ride Checklist on page 41.
▶	Front suspension	-	Pre-Ride	-	
▶	Rear suspension	-	Pre-Ride	-	
	Tires	-	Pre-Ride	-	
▶	Brake fluid level	-	Pre-Ride	-	
▶	Brake pedal travel				
	Brake system	-	Pre-Ride	-	
	Wheels/fasteners	-	Pre-Ride	-	
	Frame fasteners	-	Pre-Ride	-	
▶	Engine oil level	-	Pre-Ride	-	
▶ E	Air filter, pre-filter	-	Daily	-	Inspect; clean often; replace as needed
▶ E	Air box sediment tube	-	Daily	-	Drain deposits when visible
	Coolant (if applicable)	-	Daily	-	Check level daily, change coolant every 2 years
▶	Power steering unit (if equipped)	-	Daily	-	Inspect daily; clean often
	Headlamp/tail lamp	-	Daily	-	Check operation; apply dielectric grease if replacing
▶ E	Air filter, main element	-	Weekly	-	Inspect; replace as needed

Periodic Maintenance Chart

Perform all services at whichever maintenance interval is reached first.

Item		Maintenance Interval (whichever comes first)			Remarks
		Hours	Calendar	Miles (Km)	
▶ n	Brake pad wear	10 H	Monthly	-	Inspect periodically
	Battery	20 H	Monthly	-	Check terminals; clean; test
▶	Front Gearcase Oil (if equipped)	25 H	Monthly	-	Inspect level; change yearly
▶	Middle Gearcase Oil (if equipped)	25 H	Monthly	-	Inspect level; change yearly
▶	Rear gearcase oil (if equipped)	25 H	Monthly	-	Inspect level; change yearly
▶	Transmission oil	25 H	Monthly	-	Inspect level; change yearly
▶ E	Engine breather filter (if equipped)	25 H	Monthly	-	Inspect; replace if necessary
▶	Engine oil change (break-in)	25 H	1 M	-	Perform a break-in oil change at one month
	Park brake cable tension	25 H	1 M	-	Check tension, adjust
▶	General lubrication	50 H	3 M	-	Lubricate all fittings, pivots, cables, etc.
	Shift Linkage	50 H	6 M	-	Inspect, lubricate, adjust
n	Steering	50H	6 M	-	Lubricate
▶	Front Suspension	50 H	6 M	-	Lubricate
▶	Rear Suspension	50 H	6 M	-	Lubricate
nE	Throttle cable/ ETC switch	50 H	6 M	-	Inspect; adjust; lubricate; replace if necessary
E	Throttle body air intake ducts/flange	50 H	6 M	-	Inspect duct for proper sealing/air leaks
	Drive belt	50 H	6 M	-	Inspect; adjust; replace as needed
	Cooling system (if applicable)	50 H	6 M	-	Inspect coolant strength seasonally; pressure test system yearly
	Park brake cable tension	100 H	6 M	-	Check tension, adjust
▶	Engine oil change	100 H	6 M	-	Perform a break-in oil change at one month
▶	Oil filter change	100 H	6 M	-	Replace with oil change

▶ Perform these procedures more often for vehicles subjected to severe use.
E Emission-Related Service
n Have an authorized POLARIS dealer perform these services.

MAINTENANCE
Periodic Maintenance Chart

	Item	Maintenance Interval (whichever comes first)			Remarks
		Hours	Calendar	Miles (Km)	
nE	Fuel system	100 H	12 M	-	Check for leaks at tank cap, lines, fuel valve, filter, pump, throttle body; replace lines every two years
n	Fuel filter	100 H	12 M	-	Replace yearly
▶	Radiator (in applicable)	100 H	12 M	-	Inspect; clean external surfaces
▶	Cooling Hoses	100 H	12 M	-	Inspect for leaks
▶	Engine mounts	100 H	12 M	-	Inspect
	Exhaust muffler/ pipe	100 H	12 M	-	Inspect
▶ E	Spark plug	100 H	12 M	-	Inspect; replace as needed
n	Ignition timing	100 H	12 M	-	Inspect
▶	Wiring	100 H	12 M	-	Inspect for wear, routing, security; apply dielectric grease to connectors subjected to water, mud, etc.
n	Clutches (drive and driven)	100 H	12 M	-	Inspect; clean; replace worn parts
n	Front wheel bearings	100 H	12 M	-	Inspect; replace as needed
n	Brake fluid	200 H	24 M	-	Change every two years
	Spark arrestor	300 H	36 M	-	Clean out
	Idle speed	-			Adjust as needed
n	Toe adjustment	-			Inspect periodically; adjust when parts are replaced
n ▶	Auxiliary brake (if equipped)	-			Inspect daily; adjust as needed
	Headlight aim	-			Adjust as needed

▶ Perform these procedures more often for vehicles subjected to severe use.
E Emission-Related Service
n Have an authorized POLARIS dealer perform these services.

Lubrication Recommendations

Check and lubricate all components at the intervals outlined in the Periodic Maintenance Chart beginning on page 57, or more often under severe use, such as wet or dusty conditions. Items not listed in the chart should be lubricated at the general lubrication interval.

Item	Lube	Method
Engine Oil	PS-4 PLUS 2W-50	Add to proper level on dipstick. See page 63.
Brake Fluid	DOT 4	Maintain level between fill lines. See page 84.
Main Gearcase Oil (Transmission)	AGL PLUS Transmission Fluid	See page 68 (6X6). See page 67 (4X4/CREW).
Front Gearcase Oil	Demand Drive Plus Fluid	See page 69.
Middle Gearcase Oil (6X6)	Premium ATV Angle Drive Fluid	See page 70.
Rear Gearcase Oil (6X6)	Premium ATV Angle Drive Fluid	See page 71.
Prop Shaft U-joints (6X6)	POLARIS Premium U-Joint Lube	Locate fittings and grease.
Front Prop Shaft Yoke	POLARIS Premium U-Joint Lube	Locate fittings and grease (3 pumps maximum).

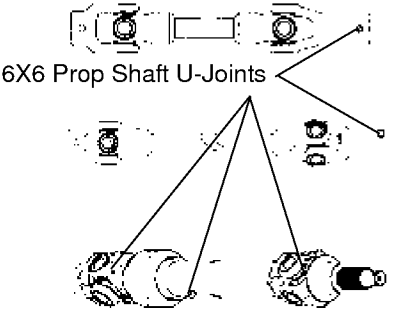

MAINTENANCE

Engine Intake Restrictor Plate

Some *RANGER* 800 models are equipped with an intake restrictor plate in order to meet vehicle class regulations. This plate MUST NOT be removed for any reason. *Removal of the intake restrictor plate will void the warranty on the vehicle.*

Engine Oil

Always check and change the engine oil at the intervals outlined in the Periodic Maintenance Chart beginning on page 57. Always change the oil filter whenever changing oil.

WARNING! Vehicle operation with insufficient, deteriorated, or contaminated engine oil will cause accelerated wear and may result in engine seizure, accident, and injury. Always perform the maintenance procedures as outlined in the Periodic Maintenance Chart.

Oil Recommendations

POLARIS recommends the use of POLARIS PS-4 *PLUS Performance* Synthetic 2W-50 4-cycle oil or a similar oil. See page 110 for the part numbers of POLARIS products.

NOTICE: Mixing brands or using a non-recommended oil may cause serious engine damage. Always use the recommended oil. Never substitute or mix oil brands.

Engine Oil

Always check and change the oil at the intervals outlined in the Periodic Maintenance Chart beginning on page 57. Always use the recommended engine oil.

Oil Check

The oil dipstick and fill tube is located on the engine.

1. Position the vehicle on a level surface.
2. Lift the lever lock to remove the dipstick. Wipe it dry with a clean cloth.
3. Reinstall the dipstick completely, but do not lock it. The dipstick must be screwed completely in to keep the angle and depth of the stick consistent.
4. Remove the dipstick and check the oil level. Maintain the oil level in the safe range. Do not overfill.

Tip: Due to the dipstick entry angle into the crankcase, the oil level will read higher on the bottom side of the dipstick. Always read the level on the upper surface of the dipstick.

5. After reinstalling the dipstick, be sure to seat the lever lock.

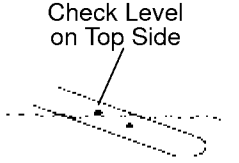

MAINTENANCE

Engine Oil

Oil and Filter Change

Always change the oil and filter at the intervals outlined in the Periodic Maintenance Chart beginning on page 57. Always change the oil filter whenever changing oil.

1. Position the vehicle on a level surface.
2. Run the engine for two to three minutes until warm. Stop the engine.
3. Clean the area around the drain plug.
4. Place a drain pan beneath engine crankcase.

CAUTION! Hot oil can cause burns to skin. Do not allow hot oil to contact skin.

5. Remove the drain plug.
6. Allow the oil to drain completely.
7. Reinstall the sealing washer on the drain plug. The sealing surfaces on drain plug and crankcase should be clean and free of burrs, nicks or scratches.
8. Reinstall the drain plug. Torque to 20 ft. lbs. (27 Nm).
9. Place shop towels beneath the oil filter. Using an oil filter wrench, turn the filter counter-clockwise to remove it.
10. Using a clean dry cloth, clean the filter sealing surface on the crankcase.
11. Lubricate the o-ring on the new filter with a film of fresh engine oil. Check to make sure the o-ring is in good condition.
12. Install the new filter and turn by hand until the filter gasket contacts the sealing surface, then turn and additional 1/2 turn.

Engine Oil

Oil and Filter Change

13. Remove the dipstick and fill the sump with two quarts (1.9 l) of recommended oil.
14. Shift the transmission to neutral.
15. Apply the brakes. Engage the park brake.
16. Start the engine. Allow it to idle for one to two minutes.
17. Stop the engine. Inspect for leaks.
18. Check the oil level on the dipstick and add oil as necessary to bring the level to the upper mark on the dipstick.
19. Dispose of used filter and oil properly.

MAINTENANCE
Gearcases
Gearcase Specification Chart

RANGER 4X4 Gearcase Specifications				
Gearcase	**Lubricant**	**Capacity**	**Fill Plug Torque**	**Drain Plug Torque**
Main Gearcase (Transmission)	AGL PLUS Transmission Fluid	34 oz. (1000 ml)	12 ft. lbs. (16.3 Nm)	12 ft. lbs. (16.3 Nm)
Front Gearcase	Demand Drive Plus Fluid	9.3 oz. (275 ml)	8-10 ft. lbs. (11-13.6 Nm	11 ft. lbs. (15 Nm)

RANGER 6x6 Gearcase Specifications				
Gearcase	**Lubricant**	**Capacity**	**Fill Plug Torque**	**Drain Plug Torque**
Main Gearcase (Transmission)	AGL PLUS Transmission Fluid	43.6 oz. (1290 ml)	12 ft. lbs. (16.3 Nm)	12 ft. lbs. (16.3 Nm)
Front Gearcase	Demand Drive Plus Fluid	9.3 oz. (275 ml)	8-10 ft. lbs. (11-13.6 Nm	11 ft. lbs. (15 Nm)
Middle Gearcase	Premium ATV Angle Drive Fluid	6.75 oz. (200 ml)	14 ft. lbs. (19.4 Nm)	14 ft. lbs. (19.4 Nm)
Rear Gearcase	Premium ATV Angle Drive Fluid	18 oz. (532 ml)	14 ft. lbs. (19.4 Nm)	14 ft. lbs. (19.4 Nm)

RANGER CREW Gearcase Specifications				
Gearcase	**Lubricant**	**Capacity**	**Fill Plug Torque**	**Drain Plug Torque**
Main Gearcase (Transmission)	AGL PLUS Transmission Fluid	34 oz. (1000 ml)	12 ft. lbs. (16.3 Nm)	12 ft. lbs. (16.3 Nm)
Front Gearcase	Demand Drive Plus Fluid	9.3 oz. (275 ml)	8-10 ft. lbs. (11-13.6 Nm	11 ft. lbs. (15 Nm)

Gearcases

Transmission (Main Gearcase) (4X4/CREW)

Always check and change the transmission oil at the intervals outlined in the Periodic Maintenance Chart beginning on page 57. Maintain the oil level even with the bottom of the fill plug hole threads.

Refer to the Gearcase Specifications Chart on page 66 for recommended lubricants, capacities and torque specifications. See page 110 for the part numbers of POLARIS products.

Oil Check

The fill plug is located on the side of the gearcase.

1. Position the vehicle on a level surface.
2. Remove the fill plug.
3. Check the oil level. Add the recommended oil as needed.
4. Reinstall the fill plug. Torque to specification.

Oil Change

The drain plug is located near the bottom of the gearcase.

1. Remove the fill plug.
2. Place a drain pan under the gearcase.
3. Remove the drain plug. Allow the oil to drain completely.
4. Clean and reinstall the drain plug. Torque to specification.
5. Add the recommended oil.
6. Reinstall the fill plug. Torque to specification.
7. Check for leaks. Dispose of used oil properly.

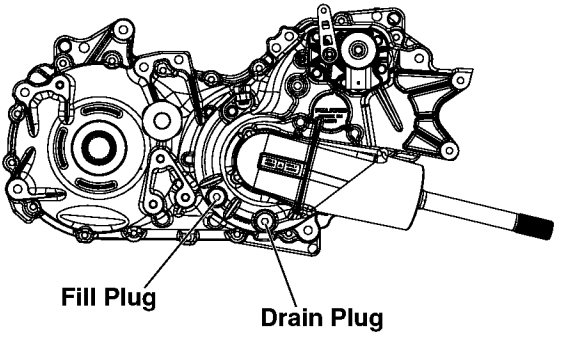

MAINTENANCE

Gearcases

Transmission (Main Gearcase) (6X6)

Always check and change the transmission oil at the intervals outlined in the Periodic Maintenance Chart beginning on page 57. Maintain the oil level even with the bottom of the fill plug hole.

Refer to the Gearcase Specifications Chart on page 66 for recommended lubricants, capacities and torque specifications. See page 110 for the part numbers of POLARIS products.

Oil Check

The fill plug is located at the rear of the vehicle.

1. Position the vehicle on a level surface.
2. Remove the fill plug.
3. Check the oil level.
4. Add the recommended oil as needed.
5. Reinstall the fill plug. Torque to specification.

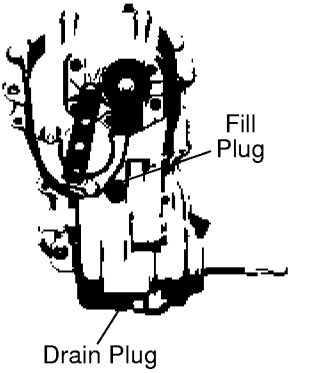

Oil Change

The drain plug is located on the bottom of the transmission. Access the drain plug through the drain hole in the skid plate.

1. Remove the fill plug.
2. Place a drain pan under the drain plug. Remove the drain plug. Allow the oil to drain completely.
3. Wipe the magnetic end of the drain plug clean to remove accumulated metallic filings. Install a new sealing washer.
4. Reinstall the drain plug. Torque to specification.
5. Add the recommended oil. Do not overfill.
6. Reinstall the fill plug. Torque to specification.
7. Check for leaks. Dispose of used oil properly.

Gearcases

Front Gearcase

Always check and change the front gearcase oil at the intervals outlined in the Periodic Maintenance Chart beginning on page 57. Maintain the oil level even with the bottom thread of the fill plug hole.

Refer to the Gearcase Specifications Chart on page 66 for recommended lubricants, capacities and torque specifications. See page 110 for the part numbers of POLARIS products.

Oil Check

The front gearcase fill plug is located on the right side of the front gearcase.

1. Position the vehicle on a level surface.
2. Remove the fill plug. Check the oil level.
3. Add the recommended oil as needed.
4. Reinstall the fill plug. Torque to specification.

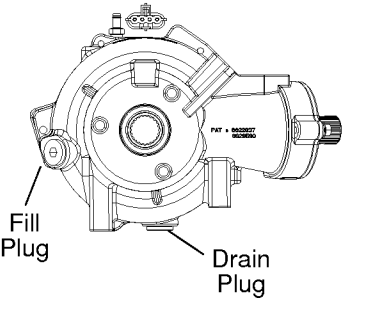

Oil Change

1. Support the vehicle securely with a jackstand.
2. Remove the front tire on the driver's side.
3. Remove the fill plug.
4. Place a drain pan under the drain plug on the bottom right-hand side.
5. Remove the drain plug. Allow the oil to drain completely.
6. Clean and reinstall the drain plug. Torque to specification.
7. Add the recommended oil.
8. Reinstall the fill plug. Torque to specification.
9. Check for leaks. Dispose of used oil properly.

MAINTENANCE

Gearcases

Middle Gearcase (6X6)

Always check and change the middle gearcase oil at the intervals outlined in the Periodic Maintenance Chart beginning on page 57. Maintain the oil level even with the bottom thread of the fill plug hole.

Refer to the Gearcase Specifications Chart on page 66 for recommended lubricants, capacities and torque specifications. See page 110 for the part numbers of POLARIS products.

The middle gearcase fill plug is located on the side of the gearcase.

Oil Check

1. Position the vehicle on a level surface.
2. Remove the fill plug. Check the oil level.
3. Add the recommended oil as needed.
4. Reinstall the fill plug. Torque to specification.

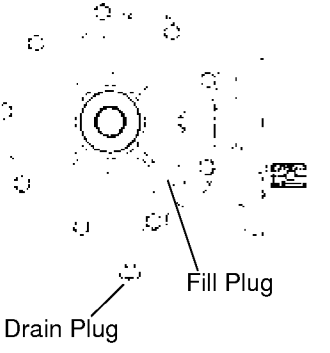

Oil Change

1. Remove the fill plug.
2. Place a drain pan under the drain plug.
3. Remove the drain plug. Allow the oil to drain completely.
4. Clean and reinstall the drain plug. Torque to specification.
5. Add the recommended fluid.
6. Reinstall the fill plug. Torque to specification.
7. Check for leaks. Discard used oil properly.

Gearcases

Rear Gearcase (6X6)

Always check and change the rear gearcase oil at the intervals outlined in the Periodic Maintenance Chart beginning on page 57.

Refer to the Gearcase Specifications Chart on page 66 for recommended lubricants, capacities and torque specifications. See page 110 for the part numbers of POLARIS products.

The rear gearcase fill plug is on the driver's side of the rear gearcase.

Oil Check

Maintain the oil level even with the bottom thread of the fill plug hole.

1. Position the vehicle on a level surface.
2. Remove the fill plug. Check the oil level.
3. Add the recommended oil as needed.
4. Reinstall the fill plug. Torque to specification.

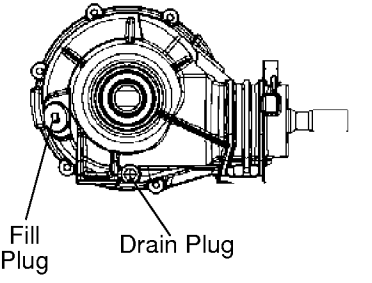

Oil Change

1. Remove the fill plug.
2. Place a drain pan under the drain plug.
3. Remove the drain plug. Allow the oil to drain completely.
4. Clean and reinstall the drain plug. Torque to specification.
5. Add the recommended oil.
6. Reinstall the fill plug. Torque to specification.
7. Check for leaks. Dispose of used oil properly.

MAINTENANCE

Spark Plugs

Spark Plug Recommendations

Refer to the specifications section beginning on page 104 for the recommended spark plug type for your vehicle. Always torque spark plugs to specification.

NOTICE: Using non-recommended spark plugs can result in serious engine damage. Always use POLARIS-recommended spark plugs.

Spark Plug Gap/Torque

Model	Electrode Gap	New Plug Torque	Used Plug Torque
All	.035" (.9 mm)	18 ft. lbs. (24 Nm)	18 ft. lbs. (24 Nm)

Spark Plug Inspection

Spark plug condition is indicative of engine operation. The spark plug firing end condition should be read after the engine is warmed up and the vehicle is driven at higher speeds. Immediately check the spark plug for correct color.

CAUTION! A hot exhaust system and engine can cause burns. Wear protective gloves when removing a spark plug for inspection.

1. Remove the seat. Remove the spark plug cap.
2. Using the spark plug wrench provided in the tool kit, remove the plug by rotating it counterclockwise.
3. Reverse the procedure for spark plug installation. Torque to specification.

Normal Plug

The normal insulator tip is gray, tan or light brown. There will be few combustion deposits. The electrodes are not burned or eroded. This indicates the proper type and heat range for the engine and the service.

The tip should not be white. A white insulator tip indicates overheating, caused by use of an improper spark plug or incorrect throttle body adjustments.

Wet Fouled Plug

The wet fouled insulator tip is black. A damp oil film covers the firing end. There may be a carbon layer over the entire nose. Generally, the electrodes are not worn. General causes of fouling are excessive oil, use of non-recommended oil or incorrect throttle body adjustments.

Cooling System

The engine coolant level is controlled or maintained by the recovery system. The recovery system components are the overflow bottle, radiator filler neck, radiator pressure cap and connecting hose.

As coolant operating temperature increases, the expanding (heated) excess coolant is forced out of the radiator, past the pressure cap, and into the overflow bottle. As engine coolant temperature decreases, the contracting (cooled) coolant is drawn back up from the tank, past the pressure cap, and into the radiator.

Some coolant level drop on new vehicles is normal as the system is purging itself of trapped air. Observe coolant levels and maintain as recommended by adding coolant to the overflow bottle.

Adding or Changing Coolant

To ensure that the coolant maintains its ability to protect the engine, we recommend that the system be completely drained every two years and a fresh mixture of antifreeze and water added. POLARIS recommends the use of POLARIS Premium 60/40 anti-freeze/coolant or a 50/50 mixture of high quality aluminum compatible anti-freeze/coolant and distilled water. POLARIS Premium 60/40 is already premixed and ready to use. Do not dilute with water. See page 110 for the part numbers of POLARIS products.

Always follow the manufacturer's mixing recommendations for the freeze protection required in your area.

Any time the cooling system has been drained for maintenance or repair, replace the coolant. If the recovery bottle has run dry, the level in the radiator should be inspected. Add coolant as needed.

MAINTENANCE

Cooling System

Radiator and Cooling Fan

Always check and clean the screen and radiator fins at the intervals outlined in the Periodic Maintenance Chart beginning on page 57. Do not obstruct or deflect air flow through the radiator by installing unauthorized accessories in front of the radiator or behind the cooling fan. Interference with the radiator air flow can lead to overheating and consequent engine damage.

NOTICE: Washing the vehicle with a high-pressure hose could damage the radiator fins and impair the radiator's effectiveness. Using a high-pressure system is not recommended.

Overflow Bottle Coolant Level

Always check and change the coolant at the intervals outlined in the Periodic Maintenance Chart beginning on page 57. Maintain the coolant level between the minimum and maximum marks on the bottle (when the fluid is cool).

The overflow bottle is located in front of the right front wheel.

1. Position the vehicle on a level surface.
2. View the coolant level in the overflow bottle.
3. If the coolant level is below the safe operating range, lift the hood and locate the overflow bottle lid. Remove the cap and use a funnel to add coolant through the filler opening. Reinstall the cap.

Tip: If coolant must be added often, or if the overflow bottle runs completely dry, there may be a leak in the system. Have the cooling system inspected by your POLARIS dealer.

Cooling System

Radiator Coolant Level

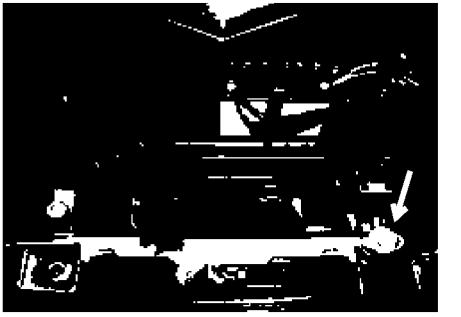

1. Lift the hood.

CAUTION! Escaping steam can cause burns. Never remove the pressure cap while the engine is warm or hot. Always allow the engine to cool before removing the pressure cap.

2. Slowly remove the radiator cap.
3. View the coolant level through the opening.
4. Use a funnel and slowly add coolant as needed.

Tip: This procedure is required only if the cooling system has been drained for maintenance and/or repair. But if the overflow bottle has run dry, the level in the radiator should also be inspected.

5. Reinstall the pressure cap. Use of a non-standard pressure cap will not allow the recovery system to function properly. See your dealer for the correct replacement part.

Power Steering Unit

If your model is equipped with power steering, frequently clean the areas around and on the power steering unit to allow proper cooling. Clean these areas thoroughly.

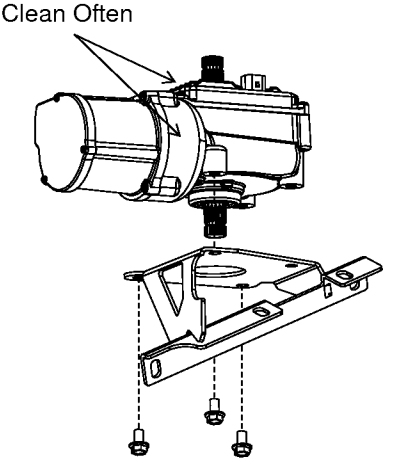

MAINTENANCE
POLARIS Variable Transmission (PVT) System

⚠ WARNING

Failure to comply with the instructions in this warning can result in severe injury or death.

Do not modify any component of the PVT system. Doing so may reduce its strength so that a failure may occur at a high speed. The PVT system has been precision balanced. Any modification will cause the system to be out of balance, creating vibration and additional loads on components.

The PVT system rotates at high speeds, creating large amounts of force on clutch components. Extensive engineering and testing has been conducted to ensure the safety of this product. However, as the owner, you have the following responsibilities to make sure this system remains safe:

- Always follow all recommended maintenance procedures. See your dealer as outlined in the owner's manual.
- This PVT system is intended for use on POLARIS products only. Do not install it in any other product.
- Always make sure the PVT housing is securely in place during operation.

When To Use Low Range and High Range

Belt slip is responsible for creating excessive heat that destroys belts, wears clutch components and causes outer clutch covers to fail. Switch to low range while operating at slower speeds to extend the life of the PVT components (belt, cover, etc.).

Condition	Range to Use
Operating at speeds less than 7 MPH (11 km/h)	Low
Towing heavy loads	Low
Operating in rough terrain (swamps, mountains, etc.)	Low
Operating at speeds greater than 7 MPH (11 km/h)	High

PVT System

PVT Drying

There may be some instances when water is accidently ingested into the PVT system. Use the following instructions to dry it out before operating.

1. Position the vehicle on a level surface.
2. Remove the drain plug. Allow the water to drain completely. Reinstall the drain plug.
3. Apply the brakes. Start the engine.
4. Engage the park brake.
5. Shift the transmission to neutral.
6. Apply varying throttle for 10-15 seconds to expel the moisture and air-dry the belt and clutches. Do not hold the throttle wide open for more than 10 seconds.
7. Allow the engine RPM to settle to idle speed. Apply the service brakes. Release the park brake and shift the transmission to the lowest available range.
8. Test for belt slippage. If the belt slips, repeat the process.
9. Take the vehicle to your dealer for service as soon as possible.

MAINTENANCE
Vehicle Immersion

NOTICE: If your vehicle becomes immersed, major engine damage can result if the machine is not thoroughly inspected. Take the vehicle to your dealer before starting the engine.

If it's impossible to take your *RANGER* to a dealer before starting it, follow the steps outlined below.

1. Move the vehicle to dry land or at the very least, to water below the footrests.
2. Dry any water present in the air box. Filter replacement is required if water is present.
3. Thoroughly dry the air pre-cleaner located under the hood.
4. Remove the spark plugs. Turn the engine over several times using the electric start.
5. Dry the spark plugs and reinstall, or replace with new plugs.
6. Attempt to start the engine. If necessary, repeat the drying procedure.
7. Take the vehicle to your dealer for service as soon as possible, whether you succeed in starting it or not.
8. If water has been ingested into the PVT follow the procedure on page 77 for drying.

Filter Systems

Air Filter

Always change the air filter at the intervals outlined in the Periodic Maintenance Chart beginning on page 57. Service the air filter more frequently if the vehicle is operated in wet conditions or at high throttle openings for extended periods.

1. Lift the cargo box to access the air box.
2. Remove the air box cover and inspect the gasket. It should adhere tightly to the cover and seal all the way around.

Tip: Grasp the filter end to prevent damage to the filter paper.

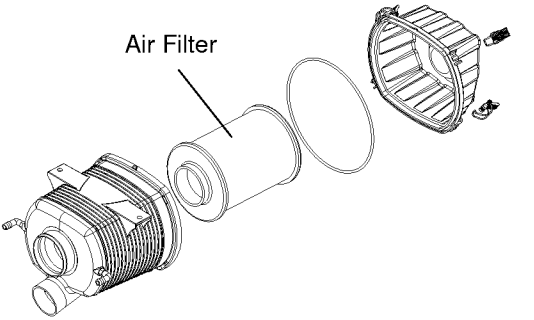

3. Remove the air filter.
4. Do not attempt to clean the main element. Install a new air filter.

Tip: Apply a small amount of general purpose grease to the sealing edges of the filter before installing.

5. Inspect the air box for oil or water deposits. If present, drain into a suitable container.

Fuel Filter

Your POLARIS vehicle is equipped with an in-line fuel filter. Have your dealer replace it after every 100 hours of operation. Do not attempt to clean the fuel filter.

MAINTENANCE
Spark Arrestor

⚠ WARNING

Failure to heed the following warnings while servicing the spark arrestor could result in serious injury or death.

Do not perform service on the spark arrestor while the system is hot. Exhaust system temperatures can reach 1000° F. Allow components to cool sufficiently before proceeding.

Remove any combustible materials from the area.

Wear eye protection and gloves.

Do not stand behind or in front of the vehicle while purging.

Never run the engine in an enclosed area. Exhaust contains poisonous carbon monoxide gas that can cause loss of consciousness or death in a very short time.

Never go under the vehicle while it's inclined.

Spark Arrestor

Use the following procedure to periodically purge accumulated carbon from the exhaust pipe.

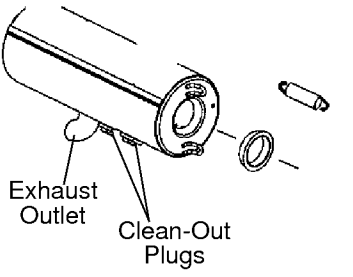

1. Remove the arrestor clean-out plugs located on the bottom of the muffler.
2. Place the transmission in neutral.
3. Engage the park brake.
4. Start the engine.
5. Purge accumulated carbon from the system by momentarily revving the engine several times.
6. If carbon is expelled, cover or plug the exhaust outlet and rap on the pipe around the clean-out plugs while revving the engine several more times.
7. If particles are still suspected to be in the muffler, elevate the rear of the vehicle one foot higher than the front. Block the wheels.
8. Repeat steps 5 and 6 until no more particles are expelled when the engine is revved.
9. Stop the engine. Allow the arrestor to cool.
10. Reinstall the arrestor plugs and remove the outlet cover or plug.

MAINTENANCE
Throttle System

⚠ WARNING

Failure to check or maintain proper operation of the throttle system can result in an accident and lead to serious injury or death if the throttle pedal sticks during operation.

Always check the pedal for free movement and return before starting the engine and occasionally during operation. Never start or operate this vehicle if it has a sticking or improperly operating throttle pedal. Immediately contact your dealer for service if throttle problems arise.

Throttle Freeplay

If the throttle pedal has excessive play due to cable stretch or misadjustment, it will cause a delay in throttle response, especially at low engine speed. The throttle may also not open fully. If the throttle pedal has no freeplay, the throttle may be hard to control, and the idle speed may be erratic.

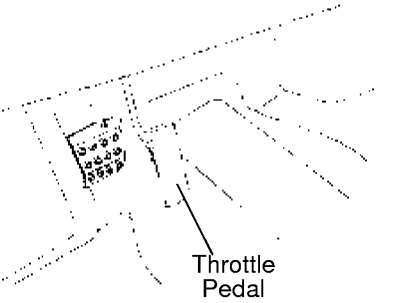

Check the throttle pedal freeplay at the intervals outlined in the Periodic Maintenance Chart beginning on page 57. Adjust the freeplay if necessary.

Throttle Freeplay Inspection

1. Apply the brakes. Engage the park brake. Shift the transmission to neutral.
2. Start the engine. Allow it to warm up thoroughly.
3. Measure the distance the throttle pedal moves before the engine begins to pick up speed. Freeplay should be 1/16 to 1/8 inches (1.6-3.2 mm).

Throttle System

Throttle Body/Idle RPM

Idle RPM is preset by the manufacturer. If the engine idle speed is not satisfactory, please see your POLARIS dealer for adjustment.

Throttle Freeplay Adjustment

1. Remove the seat.
2. Locate the throttle cable adjuster.
3. Squeeze the end of the rubber boot and slide it far enough to expose the end of the inline cable adjuster.
4. Loosen the adjuster lock nut.
5. Rotate the boot to turn the adjuster until 1/16" to 1/8" (1.5-3 mm) of freeplay is achieved at the throttle pedal. See page 82.

Tip: While adjusting, lightly flip the throttle pedal up and down.

6. Tighten the lock nut.
7. Squeeze the end of the rubber boot and slide it over the cable adjuster to its original position.

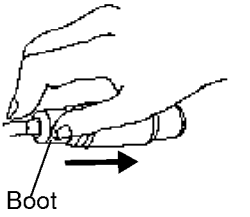

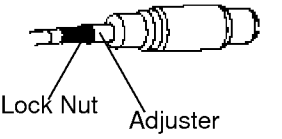

MAINTENANCE

Brakes

The front and rear brakes are hydraulic disc type brakes activated by the brake pedal. See page 26.

Brake Fluid

Inspect the brake system routinely. Inspect the level of the brake fluid before each operation.

WARNING! After opening a bottle of brake fluid, always discard any unused portion. Never store or use a partial bottle. Brake fluid is hygroscopic, meaning it rapidly absorbs moisture from the air. The moisture causes the boiling temperature of the brake fluid to drop, which can lead to early brake fade and the possibility of accident or severe injury.

Change the brake fluid every two years and any time the fluid becomes contaminated, the fluid level is below the minimum, or if the type and brand of the fluid in the reservoir are unknown.

1. Position the vehicle on a level surface.
2. View the brake fluid level at the reservoir in the driver's side wheel well.
3. The level should be between the upper (MAX) and lower (MIN) level lines.
4. If the fluid level is lower than the upper level line, add brake fluid to the upper (MAX) line.
5. Apply the brake forcefully for a few seconds and check for fluid leakage around the fittings.

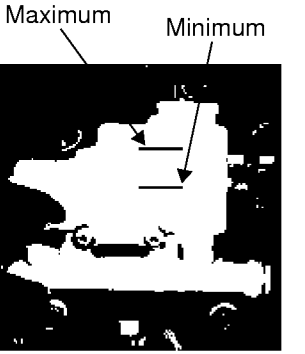

Brakes

Brake Inspection

1. Check the brake system for fluid leaks.
2. Check the brake pedal for excessive travel or a spongy feel.
3. Check the friction pads for wear, damage and looseness.
4. Inspect the brake disc spline and pad wear surface for excessive wear.
5. Change pads when worn to 3/64" (1 mm).

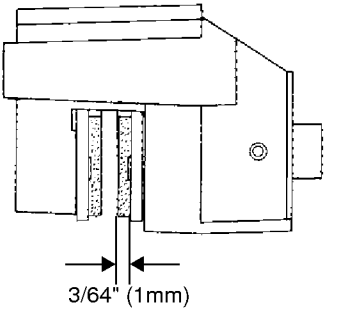

Park Brake Inspection

1. Apply the brakes.
2. Pull the park brake lever downward as far as possible.
3. Check the vehicle for movement. The vehicle should not roll while parked. If the vehicle moves, adjust the park brake.

Park Brake Release

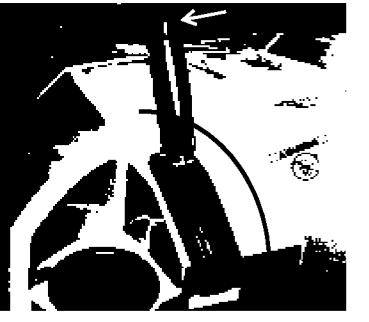

MAINTENANCE

Brakes

Park Brake Adjustment

Inspect and adjust park brake cable tension after the first 25 hours of operation and every 100 hours thereafter to ensure proper cable tension. Loss of tension in the park brake cable may cause “BRAKE” to display in the rider information center, along with activation of the limiting feature. If this occurs, move the park brake lever to the forward-most position, then inspect and adjust park brake cable tension.

Tip: If performing this service is difficult due to conditions or location, open the hood and temporarily disconnect the park brake connector. This will inactivate the limiting function. Reconnect the connector as soon as possible, and adjust the park brake cable to proper tension.

1. Position the vehicle on a level surface.
2. Shift the transmission to neutral.
3. Loosen or tighten the nuts on the lever end of the park brake cable as needed.

Steering Wheel Inspection

Check the steering wheel for specified freeplay and smooth operation at the intervals outlined in the Periodic Maintenance Chart beginning on page 57.

1. Position the vehicle on level ground.
2. Lightly turn the steering wheel left and right.
3. There should be 0.8"-1.0" (20-25 mm) of freeplay.
4. If there is excessive freeplay or strange noises, or the steering feels rough or "catchy," have the steering system inspected by an authorized POLARIS dealer.

Suspension Adjustments

The front and rear suspensions can be adjusted to provide a stiffer suspension, if necessary.

1. Remove the top shock mounting bolts from the inside mounting holes.
2. Reposition the shocks to the outside mounting holes.
3. Reinstall the shock mounting bolts. Torque to 30 ft. lbs. (40 Nm).

Spring Adjustment

Adjust the front and rear shock absorber springs by rotating the adjustment cam either clockwise or counterclockwise to increase or decrease spring tension.

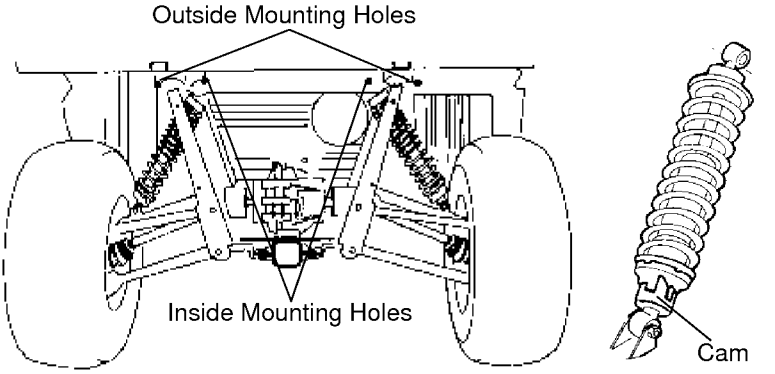

Rear Suspension Shown
Adjustment is similar for Front Suspension

MAINTENANCE
Tires

⚠ WARNING

Operating your vehicle with worn tires, improperly inflated tires, non-standard tires or improperly installed tires will affect vehicle handling and could cause an accident resulting in serious injury or death. Always follow all tire maintenance procedures as outlined in this manual and on the labels on the vehicle. Always use original equipment size and type when replacing tires.

Tire Tread Depth

Always replace tires when tread depth is worn to 1/8" (3 mm) or less.

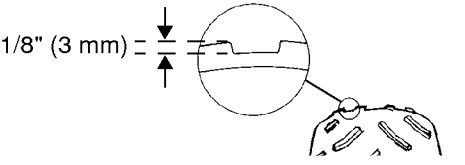

Axle and Wheel Nut Torque Specifications

Inspect the following items occasionally for tightness, and if they've been loosened for maintenance service.

Do not lubricate the stud or the lug nut.

Nut Type	Location	Nut Torque
Lug Nut (Aluminum Wheels)	Front and Rear	30 ft. lbs. (41 Nm) PLUS 1/4 TURN
Nut and Washer (Steel Wheels)	Front and Rear	35 ft. lbs. (47 Nm)
Spindle Nut	Front	70 ft. lbs. (95 Nm)
Hub Retaining Nuts	Center and Rear	110 ft. lbs. (150 Nm)

Tires

Wheel Removal

1. Apply the brakes. Engage the park brake.
2. Stop the engine. Place the transmission in gear.
3. Loosen the wheel nuts slightly.
4. Elevate the side of the vehicle by placing a suitable stand under the frame.
5. Remove the wheel nuts and washers. Remove the wheel.

Wheel Installation

1. Apply the brakes.
2. Place the transmission in gear.
3. Engage the park brake.
4. Place the wheel in the correct position on the wheel hub. Be sure the valve stem is toward the outside and rotation arrows on the tire point toward forward rotation.

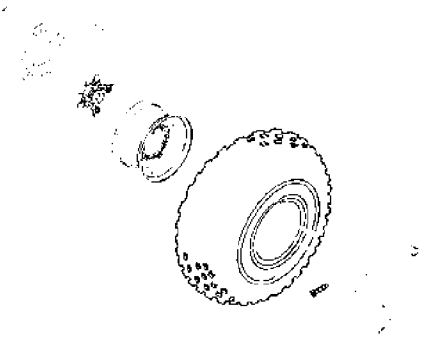

WARNING! Improperly installed wheels can adversely affect tire wear and vehicle handling, which can result in serious injury or death. Always ensure that all nuts are torqued to specification. Do not service axle nuts that have a cotter pin installed. See your POLARIS dealer.

5. Attach the wheel nuts and washers and finger tighten.
6. Carefully lower the vehicle to the ground.
7. Torque the wheel nuts to specification. See page 88.

MAINTENANCE

Lights

Poor lighting can result in reduced visibility when driving. Headlight and taillight lenses become dirty during normal operation. Clean lights frequently and replace burned out lamps promptly. Always make sure lights are adjusted properly for best visibility.

When servicing a halogen lamp, don't touch the lamp with bare fingers. Oil from your skin leaves a residue, causing a hot spot that will shorten the life of the lamp.

Headlight Lamp Replacement

1. Open the hood.

CAUTION! Hot components can cause burns to skin. Allow lamps to cool before servicing.

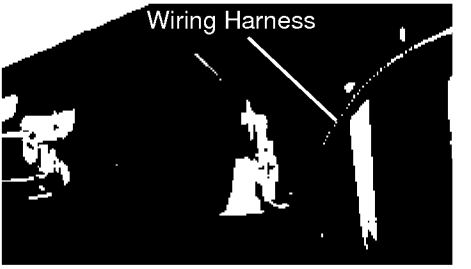

2. Unplug the headlamp from the wiring harness. Be sure to pull on the connector, not on the wiring.
3. Turn the lamp counter-clockwise to remove it.
4. Install the new lamp.

Tip: Make sure the tab on the lamp locates properly in the housing.

5. Reinstall the harness assembly into the headlight assembly.

Brake Lights

When the brake pedal is depressed, the console brake light comes on. Check the brake light before each ride.

1. Turn the ignition switch to the ON position.
2. Depress the brake pedal. The brake light should come on after about 10 mm (0.4 in.) of pedal travel. If the light doesn't come on, check the bulb.

Lights

Headlight Beam Adjustment

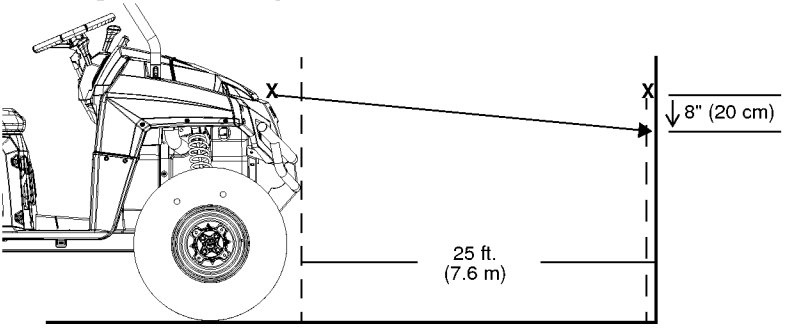

1. Place the vehicle on a level surface with the headlight approximately 25 ft. (7.6 m) from a wall.
2. Place the transmission in gear. Engage the park brake.
3. Measure the distance from the floor to the center of the headlight and make a mark on the wall at the same height.
4. Apply the brakes. Start the engine. Turn on the headlights.
5. Observe the headlight aim. The most intense part of the headlight beam should be aimed 8" (20 cm) below the mark placed on the wall. Include the weight of a rider on the seat while performing this step.
6. If a headlight needs adjustment, locate the adjustment screw at the back of the headlight.
7. Loosen the screw, adjust the headlight, and tighten the screw.
8. Repeat steps 5-7 until the lamp is properly adjusted.

MAINTENANCE
Fuses

If the engine stops or will not start, or if you experience other electrical failures, a fuse may need replacement. Locate and correct any short circuits that may have caused the blown fuse, then replace the fuse. Spare fuses are provided in the fuse box.

If you suspect that a fuse or relay may not be working properly, please see your POLARIS dealer.

Tip: The 120 ohm resistor (if equipped) is used by your POLARIS dealer for power steering diagnostics.

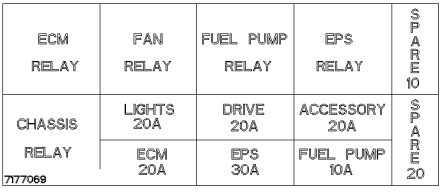

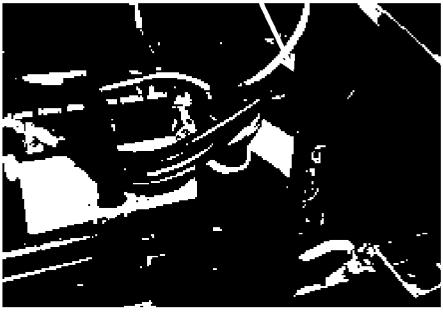

Fuse	Feature Supported
20A	Accessories, 12V Power Receptacle
10A	Electronic Fuel Injection
20A	Engine Control Module
20A	Lights
20A	Main Fuse - Ignition, Instrument Cluster
30A	Power Steering (if equipped)

Battery

⚠ WARNING

Battery electrolyte is poisonous. It contains sulfuric acid. Serious burns can result from contact with skin, eyes or clothing.

Antidote:

External: Flush with water.

Internal: Drink large quantities of water or milk. Follow with milk of magnesia, beaten egg, or vegetable oil. Call physician immediately.

Eyes: Flush with water for 15 minutes and get prompt medical attention.

Batteries produce explosive gases. Keep sparks, flame, cigarettes, etc. away. Ventilate when charging or using in an enclosed space. Always shield eyes when working near batteries. KEEP OUT OF REACH OF CHILDREN.

Your vehicle may have either a sealed battery, which requires little maintenance, or a conventional battery. A sealed battery can be identified by its flat covers on the top of the battery. A conventional battery has six filler caps on the top of the battery.

Always keep battery terminals and connections free of corrosion. If cleaning is necessary, remove the corrosion with a stiff wire brush. Wash with a solution of one tablespoon baking soda and one cup water. Rinse well with tap water and dry off with clean shop towels. Coat the terminals with dielectric grease or petroleum jelly. Be careful not to allow cleaning solution or tap water into the battery.

Battery Fluid (Conventional Battery)

A poorly maintained battery will deteriorate rapidly. Check the battery fluid level often. Maintain the fluid level between the upper and lower level marks.

Add only distilled water. Tap water contains minerals that are harmful to a battery.

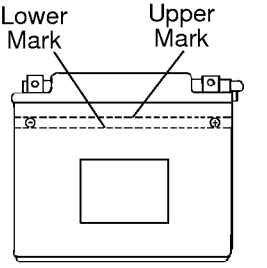

MAINTENANCE
Battery
Battery Removal

⚠ WARNING

Improperly connecting or disconnecting battery cables can result in an explosion and cause serious injury or death. When removing the battery, always disconnect the negative (black) cable first. When reinstalling the battery, always connect the negative (black) cable last.

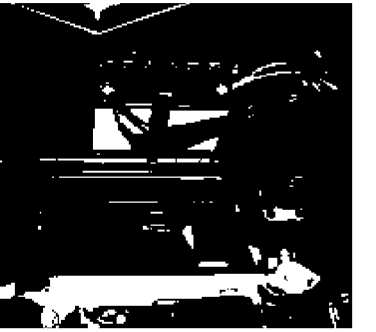

1. Open the hood.
2. On conventional batteries, remove the battery vent tube.
3. Disconnect the black (-) battery cable first.
4. Disconnect the red (+) battery cable last.
5. Lift the battery out of the vehicle. Be careful not to tip a conventional battery sideways, which could spill electrolyte.

NOTICE: If electrolyte spills, immediately wash it off with a solution of one tablespoon baking soda and one cup water to prevent damage to the vehicle.

Battery

Battery Installation

Using a new battery that has not been fully charged can damage the battery and result in a shorter life. It can also hinder vehicle performance. Follow the battery charging instructions on page 96 before installing the battery.

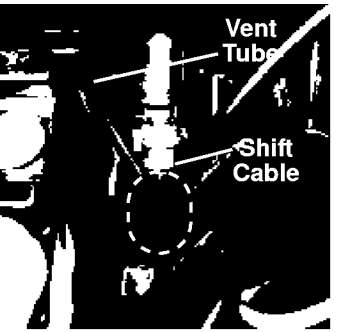

1. Ensure that the battery is fully charged.
2. Place the fully charged battery in the battery holder. Make sure the positive terminal is toward the driver's side of the vehicle.
3. With conventional batteries, install the battery vent tube and route it down in front of the shift cable, into the left front wheel well.
4. Route the vent tube through the hole in the frame support from the back side and place it behind the wheel well panel.

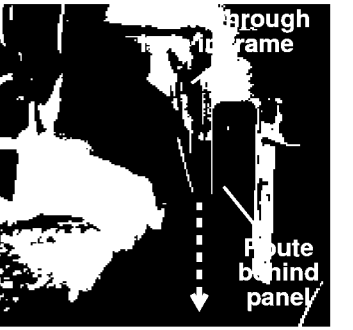

NOTICE: Route vent tube as shown to prevent electrolyte from damaging critical components (such as wire harness, brake lines, throttle cable).

WARNING! Battery gases could accumulate in an improperly installed vent tube and cause an explosion, resulting in serious injury or death. Always ensure that the vent tube is free of obstructions and is securely installed as recommended.

5. On conventional batteries, coat the terminals with dielectric grease or petroleum jelly.
6. Connect and tighten the red (+) cable first. Connect and tighten the black (-) cable last.
7. Verify that cables are properly routed and install the hold-down strap.

MAINTENANCE

Battery

Battery Storage

Whenever the vehicle is not used for a period of three months or more, remove the battery from the vehicle, ensure that it's fully charged, and store it out of the sun in a cool, dry place. Check battery voltage each month during storage and recharge as needed to maintain a full charge. See page 96.

POLARIS recommends maintaining battery charge by using a POLARIS Battery Tender charger or by charging about once a month to make up for normal self-discharge. Battery Tender can be left connected during the storage period, and will automatically charge the battery if the voltage drops below a pre-determined point. See page 110 for the part numbers of POLARIS products.

Battery Charging (Conventional Battery)

1. Remove the battery from the vehicle to prevent damage from leaking or spilled electrolyte during charging. See page 94.
2. Charge the battery with a charging output no larger than 1/10 of the battery's amp/hr rating. Charge as needed to raise the specific gravity to 1.270 or greater.
3. Reinstall the battery. See page 95. Make sure the positive terminal is toward the front of the vehicle.

Battery Charging (Sealed Battery)

The following battery charging instructions apply only to the installation of a sealed battery. Read all instructions before proceeding with the installation of this battery.

The sealed battery is already filled with electrolyte and has been sealed and *fully charged* at the factory. *Never* pry the sealing strip off or add any other fluid to this battery.

Battery

Battery Charging (Sealed Battery)

The single most important thing about maintaining a sealed battery is to keep it fully charged. Since the battery is sealed and the sealing strip cannot be removed, you must use a voltmeter or multimeter to measure DC voltage.

WARNING! An overheated battery may explode, causing severe injury or death. Always watch charging times carefully. Stop charging if the battery becomes very warm to the touch. Allow it to cool before resuming charging.

For a refresh charge, follow all instructions carefully.

1. Check the battery voltage with a voltmeter or multimeter. A fully charged battery will register 12.8 V or higher.
2. If the voltage is less than 12.8 volts, recharge the battery at 1.2 amps or less until battery voltage is 12.8 or greater.
3. When using an automatic charger, refer to the charger manufacturer's instructions for recharging. When using a constant current charger, use the guidelines on the next page for recharging.

Always verify battery condition before and 1-2 hours after the end of charging.

State of Charge	Voltage	Action	Charge Time (Using constant current charger @ standard amps specified on top of battery)
100%	12.8-13.0 volts	None, check at 3 mos. from date of manufacture	None required
75%-100%	12.5-12.8 volts	May need slight charge, if no charge given, check in 3 months	3-6 hours
50%-75%	12.0-12.5 volts	Needs charge	5-11 hours
25%-50%	11.5-12.0 volts	Needs charge	At least 13 hours, verify state of charge
0%-25%	11.5 volts or less	Needs charge with desulfating charger	At least 20 hours

MAINTENANCE

Cleaning and Storage

Washing the Vehicle

Keeping your POLARIS vehicle clean will not only improve its appearance but it can also extend the life of various components.

NOTICE: High water pressure may damage components. POLARIS recommends washing the vehicle by hand or with a garden hose, using mild soap.

NOTICE: Certain products, including insect repellents and chemicals, will damage plastic surfaces. Do not allow these types of products to contact the vehicle.

The best and safest way to clean your POLARIS vehicle is with a garden hose and a pail of mild soap and water.

1. Use a professional-type washing cloth, cleaning the upper body first and the lower parts last.
2. Rinse with clean water frequently.
3. Dry surfaces with a chamois to prevent water spots.

Washing Tips

- Avoid the use of harsh cleaners, which can scratch the finish.
- Do not use a power washer to clean the vehicle.
- Do not use medium to heavy duty compounds on the finish.
- Always use clean cloths and pads for cleaning and polishing. Old or reused cloths and pads may contain dirt particles that will scratch the finish.

Cleaning and Storage

Washing the Vehicle

If a high pressure water system is used for cleaning (not recommended), exercise extreme caution. The water may damage components and could remove paint and labels. Avoid directing the water stream at the following items:

- Wheel bearings
- Radiator
- Transmission seals
- Brakes
- Cab and body panels
- Labels and decals
- Switches and controls
- Electrical components and wiring

If an informational or graphic label becomes illegible or comes off, contact your POLARIS dealer to purchase a replacement. Replacement *safety* labels are provided by POLARIS at no charge.

Grease all zerk fittings immediately after washing. Allow the engine to run for a while to evaporate any water that may have entered the engine or exhaust system.

Polishing the Vehicle

POLARIS recommends the use of common household aerosol furniture polish for polishing the finish on your POLARIS vehicle. Follow the instructions on the container.

Polishing Tips

- Avoid the use of automotive products, some of which can scratch the finish of your vehicle.
- Always use clean cloths and pads for cleaning and polishing. Old or reused cloths and pads may contain dirt particles that will scratch the finish.

MAINTENANCE

Cleaning and Storage

Chrome Wheel Care (if equipped)

Proper maintenance will protect chrome wheels from corrosion, preserve wheel life and ensure a “like new” appearance for many years. Chrome wheels exposed to road salt (or salt in the air in coastal areas) are more susceptible to corrosion if not properly cleaned. Clean chrome wheels more often if they're exposed to salt or other corrosive elements.

1. Wash chrome wheels frequently. Use a mild detergent. Never use abrasive cleaners on plated or painted surfaces.
2. Rinse well with clear water. Soap, detergents, salt, dirt, mud and other elements can cause corrosion.
3. Polish the clean chrome wheels periodically. Use an automotive grade chrome polish.
4. Routinely and liberally apply a weather resistant wax to each polished chrome wheel. Choose a product suitable for chrome finishes. Read and follow the product labels and instructions.

Removing Corrosion

If light rust is found on the chrome finish, use steel wool (#0000-OTT grade) to remove it. Gently rub the affected areas with the steel wool until the corrosion has been removed. Clean and polish the wheel as outlined above.

Cleaning and Storage

Storage Tips

NOTICE: Starting the engine during the storage period will disturb the protective film created by fogging and damage could occur. Never start the engine during the storage period.

Clean the Exterior

Make any necessary repairs and clean the vehicle as recommended. See page 98.

Stabilize the Fuel

1. Fill the fuel tank.
2. Add POLARIS Carbon Clean Fuel Treatment or POLARIS Fuel Stabilizer. Follow the instructions on the container for the recommended amount. Carbon Clean removes water from fuel systems, stabilizes fuel and removes carbon deposits from pistons, rings, valves and exhaust systems.
3. Allow the engine to run for 15-20 minutes to allow the stabilizer to disperse through the entire fuel delivery system.

Oil and Filter

Change the oil and filter. See page 64.

Air Filter / Air Box

1. Inspect and clean or replace the pre-cleaner and air filter. See page 79.
2. Clean the air box.
3. Drain the sediment tube.

Inspect and Lubricate

Inspect all cables and lubricate all areas of the vehicle as recommended in the Periodic Maintenance Chart beginning on page 57.

Battery Maintenance

See page 96 for storage and charging procedures.

MAINTENANCE
Cleaning and Storage
Storage Tips
Fluid Levels

Inspect the fluid levels. Add or change fluids as recommended in the Periodic Maintenance Chart beginning on page 57.

- Front gearcase fluid
- Rear and Middle gearcase fluids (6X6)
- Transmission fluid
- Brake fluid (change every two years and any time the fluid looks dark or contaminated)
- Coolant (test strength/fill)

Fog the Engine

1. Treat the fuel system with POLARIS Carbon Clean. Follow the instructions on the container. Start the engine. Allow it to idle for several minutes so the Carbon Clean reaches the injectors. Stop the engine.
2. Remove the spark plugs and add 2-3 tablespoons of engine oil. To access the plug holes, use a section of clear 1/4" hose and a small plastic squeeze bottle filled with the pre-measured amount of oil. *Do this carefully!* If you miss the plug holes, oil will drain from the spark plug cavities into the hole at the front of the cylinder head, and appear to be an oil leak.
3. Reinstall the spark plugs. Torque to specification. See page 72.
4. Apply dielectric grease to the inside of each spark plug cap and reinstall the caps onto the plugs.
5. Turn the engine over several times. Oil will be forced in and around the piston rings and ring lands, coating the cylinder with a protective film of fresh oil.
6. If POLARIS fuel system additive is not used, fuel tank, fuel lines, and injectors should be completely drained of gasoline.

Storage Area/Covers

Be sure the storage area is well ventilated. Cover the vehicle with a genuine POLARIS cover. Do not use plastic or coated materials. They do not allow enough ventilation to prevent condensation, and may promote corrosion and oxidation.

Removal from Storage

1. Check the battery electrolyte level and charge the battery if necessary. Install it in the vehicle. Make sure the battery vent hose is routed properly and that it's not pinched or restricted in any way.
2. Make sure the spark plug is tight.
3. Fill the fuel tank with fuel.
4. Check all the points listed in the Daily Pre-Ride Inspection section on page 41. *Tightness of the bolts, nuts and other fasteners should be checked by an authorized POLARIS dealer.*
5. Lubricate at the intervals outlined in the Periodic Maintenance Chart beginning on page 57.

Transporting the *RANGER*

Follow these procedures when transporting the vehicle.

1. Apply the brakes. Engage the park brake.
2. Stop the engine.
3. Place the transmission in gear.
4. Secure the fuel cap, oil cap and seat.
5. Always tie the frame of the *RANGER* to the transporting unit securely with suitable straps or rope. Do not attach tie straps to the front A-arm bolt pockets.
6. Remove the key to prevent loss during transporting.

SPECIFICATIONS

RANGER 4X4	
Maximum Weight Capacity*	1500 lbs. (681 kg) (includes weight of operator, passenger, cargo, accessories)
Dry Weight	1237 lbs. (561 kg)
Fuel Capacity	8.8 gal. (33.3 l)
Engine Oil Capacity	1.9 qts. (1.8 l)
Coolant Capacity	3.25 qts. (3 l)
Towing Capacity	2000 lbs. (907 kg)
Hitch Tongue Capacity	150 lbs. (68 kg)
Max. Cargo Box Load*	1000 lbs. (454 kg)
Overall Length	114 in. (289.6 cm)
Overall Width (box)	60 in. (152.4 cm)
Overall Width (tires)	58 in. (147.3 cm)
Overall Height	76 in. (193 cm)
Wheelbase	76 in. (193 cm)
Cargo Box Dimensions (Inside)	36.5 x 54 x 11.5 in. (93 x 137 x 29 cm)
Ground Clearance	12 in. (30.5 cm)
Min. Turning Radius	158 in. (401 cm)
Engine	4 valve 4 stroke twin cylinder with counter balance
Displacement	760 cc
Bore x Stroke	80 x 76.5
Alternator Output	500 W @ 3000 RPM
Compression Ratio	10.0:1
Starting System	Electric
Fuel System	Electronic Fuel Injection
Ignition System	Bosch EFI ECU Controlled
Spark Plug / Gap	RC7YC3 /.035 in. (0.9 mm)
Front Suspension	Dual A-arm w/9.6 in. (24.4 cm) of travel
Rear Suspension	Independent w/9 in. (23 cm) of travel

*** *RANGER* 4X4 models sold in California are designed and rated for a box capacity of 600 lbs. (272 kg). The maximum weight capacity for these vehicles is 1100 lbs. (499 kg).**

SPECIFICATIONS

RANGER 4X4	
Lubrication System	Pressurized Wet Sump
Engine Oil	POLARIS 2W-50
Driving System Type	PVT, 4-wheel independent shaft, lockable differential
Shift Type	Single Lever (H/L/N/R)
Gear Reduction - Low	7.70:1
Gear Reduction - Reverse	7.00:1
Gear Reduction - High	3.6:1
Drive Ratio - Front:	3.818:1
Drive Ratio - Rear	3.105:1
Tire Size - Front	25 x 8 - 12
Tire Size - Rear	25 x 11 - 12
Tire Pressure - Front	8-12 psi (69 KPa)
Tire Pressure - Rear	8-12 psi (69 KPa)
Brakes, Front/Rear	Foot Activated, 4 wheel hydraulic disc
Brake, Park	Hand activated, mechanical
Hood Headlight	2 single beam, 50W, quartz/halogen
Taillights	10 L.E.D. (.28W)
Brake Light	10 L.E.D. (3.1W)

Clutching

See your POLARIS dealer for clutching specifications.

SPECIFICATIONS

RANGER 6X6	
Maximum Weight Capacity	2000 lbs. (907 kg) (includes weight of operator, passenger, cargo, accessories)
Dry Weight	1551 lbs. (703.5 kg)
Fuel Capacity	8.8 gal. (33.3 l)
Engine Oil Capacity	2 qts. (1.9 l)
Coolant Capacity	3.25 qts. (3 l)
Towing Capacity	2000 lbs. (907 kg)
Max. Cargo Box Load	1250 lbs. (567 kg)
Overall Length	137 in. (348 cm)
Overall Width (box)	60 in. (152.4 cm)
Overall Width (tires)	58 in. (147.3 cm)
Overall Height	76 in. (193 cm)
Wheelbase	105 in. (267 cm)
Cargo Box Dimensions (Inside)	42.5 x 54 x 11.5 in. (108 x 137 x 29 cm)
Ground Clearance	12 in. (30.5 cm)
Min. Turning Radius	243 in. (617 cm)
Engine	4 valve 4 stroke twin cylinder with counter balance
Displacement	760 cc
Bore x Stroke	80 x 76.5
Alternator Output	500 W @ 3000 RPM
Compression Ratio	10.0:1
Starting System	Electric
Fuel System	Electronic Fuel Injection
Ignition System	Bosch EFI ECU Controlled
Spark Plug / Gap	RC7YC3 /.035 in. (0.9 mm)
Front Suspension	Dual a-arm w/9.6 in. (24.4 cm) of travel
Center Suspension	Independent w/9 in. (23 cm) of travel
Rear Suspension	Independent w/9 in. (23 cm) of travel

SPECIFICATIONS

RANGER 6X6	
Lubrication System	Pressurized Wet Sump
Engine Oil	POLARIS 2W-50
Driving System Type	PVT
Shift Type	Single Lever, Console (H/L/N/R)
Gear Reduction - Low	8.71:1
Gear Reduction - Reverse	7.91:1
Gear Reduction - High	3.85:1
Drive Ratio - Front:	3.818:1
Drive Ratio - Final	3.70:1
Tire Size - Front	25 x 10 - 12
Tire Size - Center/Rear	25 x 11 - 12
Tire Pressure - Front	8-12 psi (55-82 kPa)
Tire Pressure - Rear	8-12 psi (55-82 kPa)
Brakes, Front/Rear	Foot Activated, 4 wheel hydraulic disc
Brake, Park	Hand activated, mechanical
Hood Headlight	2 single beam, 50W, quartz/halogen
Taillights	10 L.E.D. (.28W)
Brake Light	10 L.E.D. (3.1W)

Clutching

See your POLARIS dealer for clutching specifications.

SPECIFICATIONS

RANGER CREW	
Maximum Weight Capacity	1750 lbs. (795 kg) (includes weight of operator, passengers, cargo, accessories)
Dry Weight	1495 lbs. (678 kg)
Fuel Capacity	8.8 gal. (33.3 l)
Engine Oil Capacity	2 qts. (1.9 l)
Coolant Capacity	1.6 gal. (6 l)
Towing Capacity	2000 lbs. (907 kg)
Hitch Tongue Capacity	150 lbs. (68 kg)
Max. Cargo Box Load	1000 lbs. (454 kg)
Overall Length	145 in. (368 cm)
Overall Width (box)	60 in. (152.4 cm)
Overall Width (tires)	58 in. (147.3 cm)
Overall Height	76 in. (193 cm)
Wheelbase	108 in. (274 cm)
Cargo Box Dimensions (Inside)	36.5 x 54 x 11.5 in. (93 x 137 x 29 cm)
Ground Clearance	11.5 in. (29 cm)
Min. Turning Radius	255 in. (648 cm)
Engine	4 valve 4 stroke twin cylinder with counter balance
Displacement	760 cc
Bore x Stroke	80 x 76.5
Alternator Output	500 W @ 3000 RPM
Compression Ratio	10.0:1
Starting System	Electric
Fuel System	Electronic Fuel Injection
Ignition System	Bosch EFI ECU Controlled
Spark Plug / Gap	RC7YC3 /.035 in. (0.9 mm)
Front Suspension	Dual a-arm w/9.6 in. (24.4 cm) of travel
Rear Suspension	Independent w/9 in. (23 cm) of travel

SPECIFICATIONS

RANGER CREW	
Lubrication System	Pressurized Wet Sump
Engine Oil	POLARIS 2W-50
Driving System Type	PVT, 4-wheel independent shaft, lockable differential
Shift Type	Single Lever (H/L/N/R)
Gear Reduction - Low	7.70:1
Gear Reduction - Reverse	7.0:1
Gear Reduction - High	4.63:1
Drive Ratio - Front:	3.818:1
Drive Ratio - Final	3.105:1
Tire Size - Front	26 x 9 - 12
Tire Size - Rear	26 x 11 - 12
Tire Pressure - Front	12 psi (83 KPa)
Tire Pressure - Rear	16 psi (110 KPa)
Brakes, Front/Rear	Foot Activated, 4 wheel hydraulic disc
Brake, Park	Hand activated, mechanical
Hood Headlight	2 single beam, 50W, quartz/halogen
Taillights	10 L.E.D. (.28W)
Brake Light	10 L.E.D. (3.1W)

Clutching

See your POLARIS dealer for clutching specifications.

POLARIS PRODUCTS

Part Number	Description
	Engine Lubricant
2870791	Fogging Oil (12 oz./355 ml Aerosol)
2876244	PS-4 PLUS Performance Synthetic 2W-50 4-Cycle Oil (qt./.95 l)
2876245	PS-4 PLUS Performance Synthetic 2W-50 4-Cycle Oil (gal./3.8 l)
	Gearcase / Transmission Lubricants
2878068	AGL PLUS Transmission Fluid (qt./.95 l)
2878069	AGL PLUS Transmission Fluid (gal./3.8 l)
2877922	Demand Drive Plus Fluid (qt./.95 l)
2877923	Demand Drive Plus Fluid (gal./3.8 l)
2871653	Premium ATV Angle Drive Fluid (8 oz./237 ml)
2872276	Premium ATV Angle Drive Fluid (2.5 gal./9.5 l)
2870465	Pump for Gallon (3.8 l) Jug
	Coolant
2871323	60/40 Coolant (gal./3.8 l)
2871534	60/40 Coolant (qt./.95 l)
	Grease / Specialized Lubricants
2871312	Grease Gun Kit, Premium All Season
2871322	Premium All Season Grease (3 oz./89 ml cartridge)
2871423	Premium All Season Grease (14 oz./414 ml cartridge)
2871460	Starter Drive Grease
2871515	Premium U-Joint Lube (3 oz./89 ml cartridge)
2871551	Premium U-Joint Lube (14 oz./414 ml cartridge)
2871329	Dielectric Grease (Nyogel™)
2872073	Chain Lube, Aerosol (6.25 oz.)
2872348	Chain Lube, Aerosol (16 oz.)
	Additives / Miscellaneous
2871326	Carbon Clean Plus
2872189	DOT 4 Brake Fluid
2871956	Loctite™ 565 Thread Sealant
2871076	POLARIS Battery Tender™ Charger

Drive Belt Wear/Burn

Possible Cause	Solution
Driving onto a pickup or tall trailer in high range	Use low range during loading.
Starting out going up a steep incline	Use low range. See warnings on page 46.
Driving at low RPM or ground speed (3-7 MPH)	Drive at a higher speed or use low range more frequently. See page 76.
Insufficient warm-up at low ambient temperatures	Warm the engine at least 5 minutes. With the transmission in neutral, advance the throttle to about 1/8 throttle in short bursts, 5 to 7 times. The belt will become more flexible and prevent belt burning.
Slow/easy clutch engagement	Use the throttle quickly and effectively.
Towing/pushing at low RPM/low ground speed	Use low range only.
Utility use/plowing	Use low range only.
Stuck in mud or snow	Shift the transmission to low range and carefully use fast, aggressive throttle application to engage clutch. **WARNING**: Excessive throttle may cause loss of control and vehicle overturn.
Climbing over large objects from a stopped position	Shift the transmission to low range and carefully use fast, brief, aggressive throttle application to engage clutch. **WARNING**: Excessive throttle may cause loss of control and vehicle overturn.
Belt slippage from water or snow ingestion into the PVT system	Dry out the PVT. See page 77. Inspect clutch seals for damage if repeated leaking occurs.
Clutch malfunction	See your POLARIS dealer.
Poor engine performance	Check for fouled plugs or foreign material in gas tank or fuel lines. See your dealer.
Slippage from failure to warm up belt	Always warm up the belt by operating below 30 mph for one mile (5 miles or more when temperature is below freezing).
Wrong or missing belt	Install the recommended belt.
Improper break-in	Always break in a new belt and/or clutch. See pages 40 and 76.

TROUBLESHOOTING

Park Brake Engine Limiting Feature Fails to Disengage

Possible Cause	Solution
Park brake is not completely disengaged	Ensure lever is in forward-most position
Park brake connector malfunction or switch movement or failure	Disconnect the connector if temporary continued operation is necessary, see your dealer promptly for service

Engine Doesn't Turn Over

Possible Cause	Solution
Low battery voltage	Recharge the battery to 12.8 VDC
Loose battery connections	Check all connections and tighten
Loose solenoid connections	Check all connections and tighten
Loose electronic control box connections	Inspect, clean, reinstall connectors

Engine Turns Over, Fails to Start

Possible Cause	Solution
Out of fuel	Refuel
Clogged fuel filter	Inspect and clean or replace
Water is present in fuel	Drain the fuel system and refuel
Old or non-recommended fuel	Replace with fresh recommended fuel
Fouled or defective spark plugs	Inspect plugs and replace if necessary
No spark to spark plug	Inspect plugs and replace if necessary
Water or fuel in crankcase	Immediately see your POLARIS dealer
Low battery voltage	Recharge the battery to 12.8 VDC
Mechanical failure	See your dealer

Engine Backfires

Possible Cause	Solution
Weak spark from spark plug	Inspect, clean and/or replace spark plugs
Incorrect spark plug gap or heat range	Set gap to specs or replace plugs
Old or non-recommended fuel	Replace with fresh recommended fuel
Incorrectly installed spark plug wires	See your dealer
Incorrect ignition timing	See your dealer
Mechanical failure	See your dealer
Loose ignition connections	Check all connections and tighten
Water present in fuel	Replace with fresh recommended fuel

Engine Pings or Knocks

Possible Cause	Solution
Poor quality or low octane fuel	Replace with recommended fuel
Incorrect ignition timing	See your dealer
Incorrect spark plug gap or heat range	Set gap to specs or replace plugs

Engine Runs Irregularly, Stalls or Misfires

Possible Cause	Solution
Fouled or defective spark plugs	Inspect, clean and/or replace spark plugs
Worn or defective spark plug wires	See your dealer
Incorrect spark plug gap or heat range	Set gap to specs or replace plugs
Loose ignition connections	Check all connections and tighten
Water present in fuel	Replace with new fuel
Low battery voltage	Recharge battery to 12.8 VDC
Kinked or plugged fuel tank vent line	Inspect and replace
Incorrect fuel	Replace with recommended fuel
Clogged air filter	Inspect and clean or replace
Other mechanical failure	See your dealer
Possible Lean Fuel Cause	**Solution**
Low or contaminated fuel	Add or change fuel, clean the fuel system
Low octane fuel	Replace with recommended fuel
Clogged fuel filter	Replace filter
Possible Rich Fuel Cause	**Solution**
Fuel is very high octane	Replace with lower octane fuel

TROUBLESHOOTING

Engine Stops or Loses Power

Possible Cause	Solution
Out of fuel	Refuel
Kinked or plugged fuel vent line	Inspect and replace
Water is present in fuel	Replace with new fuel
Fouled or defective spark plugs	Inspect, clean and/or replace spark plug
Worn or defective spark plug wires	See your dealer
Incorrect spark plug gap or heat range	Set gap to specs or replace plug
Loose ignition connections	Check all connections and tighten
Low battery voltage	Recharge the battery to 12.8 VDC
Incorrect fuel	Replace with fresh recommended fuel
Clogged air filter	Inspect and clean or replace
Other mechanical failure	See your dealer
Overheated engine	Clean radiator screen and core, clean engine exterior, see your dealer

DECLARATION OF CONFORMITY

Polaris Industries Inc.,
2100 Hwy 55, Medina, MN 55340 U.S.A.
Telephone 763-542-0500
April 22, 2010

We, Polaris Industries Inc., declare that the vehicles listed below conform to the essential health and safety requirements applicable to off-road all-terrain vehicles.

APPLICABLE EUROPEAN DIRECTIVES	TEST / EVALUATION METHODS	
2006/42/EC as amended (Machinery Directive)	EN 1050 hazard analysis prEN 15997 driver-perceived noise level prEN 15997 vibration	
2004/108/EC as amended (EMC Directive)	CISPR 12:2009 CAN/CSA-C108.4-M92	EN 55012:2007 EN 61000-6-2:2005

PRODUCT IDENTIFICATION

VEHICLE SERIES	TRADE NAME	MODEL YEARS
__KA05__ / __KA09__	OUTLAW 50 / 90	2008, 2009, 2010, 2011
__FA09__	SPORTSMAN 90	2008, 2009, 2010, 2011
__VA17__	RZR 170	2009, 2010, 2011
__PB20__	PHOENIX 200	2008, 2009, 2010, 2011
__BA32__, __NA32__	TRAIL BLAZER 330	2008, 2009, 2010, 2011
__CA32__, __EA32__	TRAIL BOSS 330	2008, 2009, 2010, 2011
__BA50__, __BG50__	SCRAMBLER 500	2008, 2009, 2010, 2011
__GJ45__	OUTLAW 450	2008, 2009, 2010, 2011
__GJ52__, __GP52__	OUTLAW 525 / 525 S	2008, 2009, 2010, 2011
__LH46__	SPORTSMAN 400	2008, 2009, 2010, 2011
__MH50__	SPORTSMAN 500 HO	2008, 2009, 2010, 2011
__DH50__	SPORTSMAN 500 HO TOURING	2010, 2011
__ZN55__ __ZX55__	SPORTSMAN 550 EFI	2009, 2010, 2011
__TN55__, __TX55__	SPORTSMAN 550 X2	2010, 2011
__DN55__, __DX55__	SPORTSMAN 550 TOURING	2010, 2011
__MN76__	SPORTSMAN 800	2008, 2009, 2010, 2011
__CL76__, __CF76__	SPORTSMAN 800 6X6	2009, 2010, 2011
__ZN85__, __ZX85__	SPORTSMAN 850 EFI	2009, 2010, 2011
__TN85__, __TX85__	SPORTSMAN 850 X2	2010, 2011
__DN85__, __DX85__	SPORTSMAN 850 TOURING	2010, 2011
__RH45__	RANGER 400	2010, 2011
__WH45__	RANGER 400 CREW	2011
__RH50__	RANGER 500 4X4	2010, 2011
__TH76__	RANGER 800 EFI 4X4	2010, 2011
__WH76__	RANGER 800 EFI CREW	2010, 2011
__HR76__	RANGER 800 6X6	2010, 2011
__HY76__, __TY76__	RANGER HD 800 4X4	2010, 2011
__TH90__	RANGER DIESEL	2011
__WH90__	RANGER DIESEL CREW	2011
__VH76__, __VY76__	RANGER RZR / RZR S	2008, 2009, 2010, 2011
__XH76__	RANGER RZR 4	2011

European Community Person Authorized to Compile the Technical File:	Authorized Manufacturer Signatory Empowered to Draw up the EC Declaration of Conformity:
Ross Clifford, General Manager Polaris Britain Ltd Forge Mills Park, Station Road Coleshill, Warwickshire B46 1HT	Lawrence E. Keller, Product Compliance Manager 7290 East Viking Blvd. Wyoming, MN 55092

WARRANTY

LIMITED WARRANTY

POLARIS Sales Inc., 2100 Highway 55, Medina, MN 55340, gives a SIX MONTH LIMITED WARRANTY on all components of the POLARIS *RANGER* against defects in material or workmanship. POLARIS also gives a one year limited warranty on the final drive chain (if equipped) for failure due to defects. This warranty covers the parts and labor charges for repair or replacement of defective parts which are covered by this warranty. This warranty begins on the date of purchase. This warranty is transferable to another consumer during the warranty period through a POLARIS dealer.

REGISTRATION

At the time of sale, the Warranty Registration Form must be completed by your dealer and submitted to POLARIS within ten days. Upon receipt of this registration, POLARIS will record the registration for warranty. No verification of registration will be sent to the purchaser as the copy of the Warranty Registration Form will be the warranty entitlement. If you have not signed the original registration and received the customer copy, please contact your dealer immediately. NO WARRANTY COVERAGE WILL BE ALLOWED UNLESS YOUR VEHICLE IS REGISTERED WITH POLARIS.

Initial dealer preparation and set-up of your vehicle is very important in ensuring trouble-free operation. Purchasing a machine in the crate or without proper dealer set-up will void your warranty coverage.

WARRANTY COVERAGE AND EXCLUSIONS: LIMITATIONS OF WARRANTIES AND REMEDIES

The POLARIS limited warranty excludes any failures that are not caused by a defect in material or workmanship. This warranty does not cover accidental damage, normal wear and tear, abuse or improper handling. This warranty also does not cover any vehicle that has been altered structurally, modified, neglected, improperly maintained, used for racing, or used for purposes other than for which it was manufactured, or for any damages which occur during trailer transit or as a result of unauthorized service or the use of unauthorized parts. In addition, this warranty does not cover physical damage to paint or finish, stress cracks, tearing or puncturing of upholstery material, corrosion, or defects in parts, components or the vehicle due to fire, explosions or any other cause beyond POLARIS' control.

Warranty does not apply to parts exposed to friction surfaces, stresses, environmental conditions and/or contamination for which they were not designed or not intended, including but not limited to the following items:

- Wheels and tires
- Suspension components
- Brake components
- Seat components
- Clutches and components
- Steering components
- Batteries
- Light bulbs/Sealed beam lamps
- Finished and unfinished surfaces
- Carburetor/Throttle body components
- Engine components
- Drive belts
- Hydraulic components
- Circuit breakers/Fuses
- Electronic components

LIMITATIONS OF WARRANTIES AND REMEDIES

Warranty applies to the product only and does not allow for coverage of personal loss. Some items are considered "consumable," meaning they are considered part of normal maintenance or part of completing an effective repair. The following items are excluded from warranty coverage in the event of a warranty claim:

- Spark Plugs
- Filters
- Fuel
- Sealants
- Hotel fees
- Towing charges
- Mileage
- Rentals/Loss of product use
- Lubricants such as oil, grease, etc.
- Batteries (unless defective)
- Cosmetic damage/repair
- Coolants
- Meals
- Shipping/ handling fees
- Product pick-up/delivery
- Loss of vacation/personal time

This warranty also excludes failures resulting from improper lubrication; improper engine timing; improper fuel; surface imperfections caused by external stress, heat, cold or contamination; operator error or abuse; improper component alignment, tension, adjustment or altitude compensation; failure due to snow, water, dirt or other foreign substance ingestion/contamination; improper maintenance; modified components; use of aftermarket components resulting in failure; unauthorized repairs; repairs made after the warranty period expires or by an unauthorized repair center; use of the product in competition or for commercial purposes. Warranty will not apply to any product which has been damaged by abuse, accident, fire or any other casualty not determined a defect of materials or workmanship.

This warranty does not cover the use of unauthorized lubricants, chemicals, or fuels that are not compatible with the vehicle. The exclusive remedy for breach of this warranty shall be, at POLARIS' exclusive option, repair or replacement of any defective materials, or components or products. THE REMEDIES SET FORTH IN THIS WARRANTY ARE THE ONLY REMEDIES AVAILABLE TO ANY PERSON FOR BREACH OF THIS WARRANTY. POLARIS SHALL HAVE NO LIABILITY TO ANY PERSON FOR INCIDENTAL, CONSEQUENTIAL OR SPECIAL DAMAGES OF ANY DESCRIPTION, WHETHER ARISING OUT OF EXPRESS OR IMPLIED WARRANTY OR ANY OTHER CONTRACT, NEGLIGENCE, OR OTHER TORT OR OTHERWISE. THIS EXCLUSION OF CONSEQUENTIAL, INCIDENTAL, AND SPECIAL DAMAGES IS INDEPENDENT FROM AND SHALL SURVIVE ANY FINDING THAT THE EXCLUSIVE REMEDY FAILED OF ITS ESSENTIAL PURPOSE. Some states do not permit the exclusion or limitation of incidental or consequential damages or implied warranties, so the above limitations or exclusions may not apply to you if inconsistent with controlling state law.

California Residents

The model year 2011 *RANGER* 800 4X4 is available in 49-state and 50-state versions. Only the 50-state models are certified for sale in California. The 50-state models available for sale in California are identified by the letter "C" in the 10th digit of the model name (e.g., R11TH76A_C).

The 50-state *RANGER* 800 4X4 models are designed and built with a 600-pound (272-kg) cargo box capacity. Any modifications to the factory-built suspension system, or any other means of altering the cargo box capacity, may be a violation of the applicable California regulations and may void all warranty offered by the manufacturer.

WARRANTY

LIMITATIONS OF WARRANTIES AND REMEDIES

ALL IMPLIED WARRANTIES (INCLUDING BUT NOT LIMITED TO THE IMPLIED WARRANTIES OF MERCHANTABILITY AND FITNESS FOR A PARTICULAR PURPOSE) ARE LIMITED IN DURATION TO THE ABOVE SIX MONTH WARRANTY PERIOD. POLARIS FURTHER DISCLAIMS ALL EXPRESS WARRANTIES NOT STATED IN THIS WARRANTY. Some states do not allow limitations on how long an implied warranty lasts, so the above limitation may not apply to you if inconsistent with controlling state law.

HOW TO OBTAIN WARRANTY SERVICE

If your vehicle requires warranty service, you must take it to a POLARIS Servicing Dealer. When requesting warranty service you must present your copy of the Warranty Registration form to the dealer. (THE COST OF TRANSPORTATION TO AND FROM THE DEALER IS YOUR RESPONSIBILITY). POLARIS suggests that you use your original selling dealer; however, you may use any POLARIS Servicing Dealer to perform warranty service.

Please work with your dealer to resolve any warranty issues. Should your dealer require any additional assistance they will contact the appropriate person at POLARIS.

This warranty gives you specific legal rights, and you may also have other rights which vary from state to state.

If any of the above terms are void because of state or federal law, all other warranty terms will remain in effect.

Lubricants

1. Mixing oil brands or using non-recommended oil may cause engine damage. We recommend the use of POLARIS engine oil.

2. Damage resulting from the use of non-recommended lubricants may not be covered by warranty.

SPARK ARRESTOR

POLARIS warrants that the spark arrestor in this vehicle will meet the efficiency requirements of USFS standard 5100-1c for at least 1000 hours when subjected to normal use and when maintenance and installation are in accordance with POLARIS recommendations.

Exported Vehicles

EXCEPT WHERE SPECIFICALLY REQUIRED BY LAW, THERE IS NO WARRANTY OR SERVICE BULLETIN COVERAGE ON THIS VEHICLE IF IT IS SOLD OUTSIDE THE COUNTRY OF THE SELLING DEALER'S AUTHORIZED LOCATION.

This policy does not apply to vehicles that have received authorization for export from POLARIS Industries. Dealers may not give authorization for export. You should consult an authorized dealer to determine this vehicle's warranty or service bulletin coverage if you have any questions.

This policy does not apply to vehicles registered to government officials or military personnel on assignment outside the country of the selling dealer's authorized location.

This policy does not apply to Safety Bulletins.

How to Get Service

In the Country where your vehicle was purchased:

Warranty or Service Bulletin repairs must be done by an authorized POLARIS dealer. If you move or are traveling within the country where your vehicle was purchased, Warranty or Service Bulletin repairs may be requested from any authorized POLARIS dealer who sells the same line as your vehicle.

Outside the Country where your vehicle was purchased:

If you are traveling temporarily outside the country where your vehicle was purchased, you should take your vehicle to an authorized POLARIS dealer. You must show the dealer photo identification from the country of the selling dealer's authorized location as proof of residence. Upon residence verification, the servicing dealer will be authorized to perform the warranty repair.

If You Move:

If you move to another country, be sure to contact POLARIS Customer Assistance and the customs department of the destination country before you move. Vehicles importation rules vary considerably from country to country. You may be required to present documentation of your move to POLARIS Industries in order to continue your warranty coverage. You may also be required to obtain documentation from POLARIS Industries in order to register your vehicle in your new country. You should warranty register your vehicle at a local POLARIS dealer in your new country immediately after you move to continue your warranty coverage and to ensure that you receive safety information and notices regarding your vehicle.

WARRANTY

How to Get Service

If Purchased From A Private Party:

If you purchase a POLARIS product from a private citizen, to be kept and used outside of the country in which the vehicle was originally purchased, all warranty coverage will be denied. You must nonetheless warranty register your vehicle under your name and address with a local POLARIS dealer in your country to ensure that you receive safety information and notices regarding your vehicle.

Notice

If your vehicle is registered outside of the country where it was purchased, and you have not followed the procedure set out above, your vehicle will no longer be eligible for warranty or service bulletin coverage of any kind, other than *safety* bulletins. (Vehicles registered to Government officials or military personnel on assignment outside of the country where the vehicle was purchased will continue to be covered by the basic warranty.)

For questions call POLARIS Customer Assistance:

United States: 1-888-704-5290

Canada: 1-204-925-7100

U.S.A. EPA Emissions Limited Warranty

This emissions limited warranty is in addition to the POLARIS standard limited warranty for your vehicle. POLARIS Industries Inc. warrants that at the time it is first purchased, this emissions-certified vehicle is designed, built and equipped so it conforms with applicable U.S. Environmental Protection Agency emission regulations. POLARIS warrants that the vehicle is free from defects in materials and workmanship that would cause it to fail to meet these regulations.

The warranty period for this emissions-certified vehicle starts on the date the vehicle is first purchased and continues for a period of 500 hours of engine operation, 5000 kilometers (3100 miles) of vehicle travel, or 30 calendar months from the date of purchase, whichever comes first.

This emissions limited warranty covers components whose failure increases the vehicle's regulated emissions, and it covers components of systems whose only purpose is to control emissions. Repairing or replacing other components not covered by this warranty is the responsibility of the vehicle owner. This emissions limited warranty does not cover components whose failure does not increase the vehicle's regulated emissions.

For exhaust emissions, emission-related components include any engine parts related to the following systems:

- Air-induction system
- Fuel system
- Ignition system
- Exhaust gas recirculation systems

The following parts are also considered emission-related components for exhaust emissions:

- Aftertreatment devices
- Crankcase ventilation valves
- Sensors
- Electronic control units

The following parts are considered emission-related components for evaporative emissions:

- Fuel Tank
- Fuel Cap
- Fuel Line
- Fuel Line Fittings
- Clamps*
- Pressure Relief Valves*
- Control Valves*
- Control Solenoids*
- Electronic Controls*
- Vacuum Control Diaphragms*
- Control Cables*
- Control Linkages*
- Purge Valves
- Vapor Hoses
- Liquid/Vapor Separator
- Carbon Canister
- Canister Mounting Brackets
- Carburetor Purge Port Connector

*As related to the evaporative emission control system.

WARRANTY

U.S.A. EPA Emissions Limited Warranty

The exclusive remedy for breach of this limited warranty shall be, at the exclusive option of POLARIS, repair or replacement of any defective materials, components or products. THE REMEDIES SET FORTH IN THIS LIMITED WARRANTY ARE THE ONLY REMEDIES AVAILABLE TO ANY PERSON FOR BREACH OF THIS WARRANTY. POLARIS SHALL HAVE NO LIABILITY TO ANY PERSON FOR INCIDENTAL, CONSEQUENTIAL OR SPECIAL DAMAGES OF ANY DESCRIPTION,WHETHER ARISING OUT OF EXPRESS OR IMPLIED WARRANTY OR ANY OTHER CONTRACT, NEGLIGENCE OR OTHER TORT OR OTHERWISE. THIS EXCLUSION OF CONSEQUENTIAL, INCIDENTAL, AND SPECIAL DAMAGES IS INDEPENDENT FROM AND SHALL SURVIVE ANY FINDING THAT THE EXCLUSIVE REMEDY FAILED OF ITS ESSENTIAL PURPOSE.

ALL IMPLIED WARRANTIES (INCLUDING BUT NOT LIMITED TO ANY IMPLIED WARRANTIES OF MERCHANTABILITY AND FITNESS FOR A PARTICULAR PURPOSE) ARE LIMITED IN DURATION TO THE WARRANTY PERIOD DESCRIBED HEREIN. POLARIS DISCLAIMS ALL EXPRESS WARRANTIES NOT STATED IN THIS WARRANTY. Some states do not allow limitations on how long an implied warranty lasts, so the above limitation may not apply if it is inconsistent with the controlling state law.

This limited warranty excludes failures not caused by a defect in material or workmanship.This limited warranty does not cover damage due to accidents, abuse or improper handling, maintenance or use. This limited warranty also does not cover any engine that has been structurally altered, or when the vehicle has been used in racing competition. This limited warranty also does not cover physical damage, corrosion or defects caused by fire, explosions or other similar causes beyond the control of POLARIS.

Owners are responsible for performing the scheduled maintenance identified in the owner's manual. POLARIS may deny warranty claims for failures that have been caused by the owner's or operator's improper maintenance or use, by accidents for which POLARIS has no responsibility, or by acts of God.

Any qualified repair shop or person may maintain, replace, or repair the emission control devices or systems on your vehicle. POLARIS recommends that you contact an authorized POLARIS dealer to perform any service that may be necessary for your vehicle. POLARIS also recommends that you use only Pure POLARIS parts. It is a potential violation of the Clean Air Act if a part supplied by an aftermarket parts manufacturer reduces the effectiveness of the vehicle's emission controls. Tampering with emission controls is prohibited by federal law.

If you have any questions regarding your warranty rights and responsibilities, please contact the POLARIS Warranty Department at 1-888-704-5290.

MAINTENANCE LOG

Use the following chart to record periodic maintenance.

DATE	MILES (KM) OR HOURS	TECHNICIAN	SERVICE PERFORMED / COMMENTS

MAINTENANCE LOG

DATE	MILES (KM) OR HOURS	TECHNICIAN	SERVICE PERFORMED / COMMENTS

INDEX

A

Accessory Outlets 22
Air Filter 79
Air Filter Cleaning 79
All Wheel Drive 54-55
Disengaging AWD 54
Engaging AWD. 54
Locking the Differential 55
All Wheel Drive Switch 25
Arrestor, Spark, Purging 81
Arrestor, Spark, Warning 80
Auxiliary Outlets. 22
Axle Nut Inspection 88
Axle Nut Torque 88

B

Battery 93-97
Charging (Conventional) 96
Charging (Sealed) 96-97
Fluid 93
Installation 95
Removal 94
Storage 96
Battery Warnings 93
Beam Adjustment, Headlight 91
Belt Burning 111
Belt Life 52
Belt Wear 111
Brake Fluid 84
Brake Inspection 85
Brake Light Inspection 90
Brake Pedal 26
Brake, Park 27
Brake, Park, Adjustment. 86
Brake, Park, Inspection. 85
Brakes 84-86
Braking 42
Break-In Period. 40

C

Cab Frame, ROPS. 32
Cab Nets 29
Capacity, Weight 51
Cargo. 50-51
Cargo Box, Dumping 53

C

Charts
Gearcase Specifications 66
Periodic Maintenance 57-60
Check Engine Indicator 39
Chrome Wheel Care 100
Cleaning and Storage 98-102
Clutching, 4X4 105
Clutching, 6X6 107
Clutching, CREW 109
Component Locations. 20-21
Console 22-23
Coolant Level, Overflow Bottle 74
Coolant Level, Radiator 75
Coolant, Adding or Changing. 73
Cooling Fan 74
Cooling System. 73-75
Corrosion Removal, Chrome 100
Crankcase Emission Control System 56

D

Differential Lock Switch 25
Differential Locking 55
Disengaging AWD 54
Display Units, Standard/Metric 36
Drive Belt Wear 111
Drivetrain Break-In. 40
Driving Downhill 47
Driving in Reverse 49
Driving on a Sidehill. 47
Driving on Slippery Surfaces 45
Driving Over Obstacles 46
Driving Procedure. 43
Driving Through Water 48
Driving Uphill. 46
Driving with a Passenger 44
Driving, After Driving in Water. . . . 77
Drying the Transmission. 77
Dumping the Cargo Box. 53

E

Electromagnetic Interference 56
Electronic Power Steering 28
Emission Control, Crankcase 56
Emission Control, Exhaust 56

INDEX

E

Emission Control, Noise 56
Emissions Limited Warranty . . 121-122
Engaging AWD 54
Engine Break-In. 40
Engine Fogging 102
Engine Idle Speed 83
Engine Intake Restrictor Plate 62
Engine Oil 62-65
Engine Starting 42
Engine Stopping. 42
EPS 28
Equipment Modifications 15
Error Codes, Engine. 39
Exhaust Emission Control System. . 56
Exhaust System Purging 81
Exhaust System Warning. 80

F

Fan, Cooling 74
Filter Cleaning, Air 79
Filter Cleaning, Fuel 79
Filter Systems 79
Filter, Air 79
Filter, Fuel 79
Fluid, Battery 93
Fluid, Brake 84
Fluid Change
Engine Oil 64-65
Front Gearcase. 69
Main Gearcase (4X4/CREW) . 67
Main Gearcase (6X6). 68
Middle Gearcase (6X6) 70
Rear Gearcase 71
Transmission (4X4/CREW) . . 67
Transmission (6X6) 68
Fluid Level
Engine Oil 63
Front Gearcase. 69
Main Gearcase (4X4/CREW) . 67
Main Gearcase (6X6). 68
Middle Gearcase (6X6) 70
Rear Gearcase 71
Transmission (4X4/CREW) . . 67
Transmission (6X6) 68

F

Fluid Levels During Storage 102
Fluid Part Numbers 110
Fogging the Engine 102
Fouled Plugs 72
Front Gearcase. 69
Fuel Cap. 28
Fuel Filter 79
Fuel Safety. 17
Fuel Stabilizer 101
Fuel Tank Filler Cap 28
Fuses 92

G

Gap, Spark Plug. 72
Gasoline Handling 17
Gear Selector 23
Gearcase Specification Chart. 66
Gearcase, Front 69
Gearcase, Middle (6X6) 70
Gearcase, Rear (6X6) 71
Gearcases. 66-71
Gears, Shifting. 23

H

Hauling Cargo 50-51
Headlight Beam Adjustment 91
Headlight Lamp Replacement 90
Hitch 26
Hitch Weight 52

I

Idle Speed 83
Ignition Switch 24
Indicator Lamps. 33
Inspection, Pre-Ride 41
Instrument Cluster 33-39
Intake Restrictor Plate 62
Interference, Electromagnetic 56

K

Key, Periodic Maintenance Chart . . . 58

INDEX

L

Lamp Replacement, Headlight 90
Light Switch 24
Lights 90-91
Load Capacity 51
Lubrication Recommendations 61

M

Main Gearcase (6X6) 68
Maintenance Log 123-124
Maintenance, Periodic 57-60
Metric Display 36
Middle Gearcase (6X6) 70
Mode Button 23
Modifications to Vehicle 15

N

Noise Emission Control System 56

O

Obstacles 46
Oil, Engine 62-65
Oil and Filter Care During Storage. 101
Oil Change
Engine 64-65
Front Gearcase 69
Main Gearcase (4X4/CREW) .. 67
Main Gearcase (6X6) 68
Middle Gearcase (6X6) 70
Rear Gearcase 71
Transmission (4X4/CREW) ... 67
Transmission (6X6) 68
Oil Level
Engine 63
Front Gearcase 69
Main Gearcase (4X4/CREW) .. 67
Main Gearcase (6X6) 68
Middle Gearcase (6X6) 70
Rear Gearcase 71
Transmission (4X4/CREW) ... 67
Transmission (6X6) 68
Oil Recommendation, Engine 62
Operation on Public Lands 56
Operator Safety 12-19
Outlets, Auxiliary 22

P

Park Brake 27
Park Brake Adjustment 86
Park Brake Inspection 85
Parking on an Incline 49
Parking the Vehicle 49
Part Numbers 110
Periodic Maintenance Chart 57-60
Plug Gap 72
Plug Torque 72
Plug, Accessory 22
Plugs, Fouled 72
Plugs, Spark 72
Polaris Products 110
Polishing the Vehicle 99
Power Steering 28
Power Steering Unit (Cleaning) 75
Pre-Ride Inspection 41
Product Part Numbers 110
Public Lands 56
PVT Break-In 40
PVT Drying 77
PVT System 76
PVT Warning 76

R

Radiator 74
Radiator Coolant Level 75
Rear Gearcase (6X6) 71
Rear Suspension Adjustment 87
Receiver Hitch 26
Removing the Vehicle from Storage 103
Reverse Operation 49
Rider Information Center 34-39
Rollover Protective Structure 32
ROPS Cab Frame 32

S

Safety Labels 7-11
Safety Symbols 4
Seat Belts 30-31
Seat Removal 28
Severe Use Definition 57
Shifter 23

INDEX

S

Shifting Gears 23
Shock Spring Adjustment 87
Signal Words 4
Spark Arrestor Purging 81
Spark Arrestor Warning. 80
Spark Plug Gap 72
Spark Plug Inspection 72
Spark Plug Recommendations. 72
Spark Plug Torque 72
Spark Plugs 72
Spark Plugs, Fouled. 72
Specifications, 4X4 104-105
Specifications, 6X6 106-107
Specifications, CREW. 108-109
Specifications, Gearcase 66
Speed, Towing 52
Speedometer 33
Spring, Shock, Adjustment 87
Stabilizing the Fuel 101
Starting the Engine 42
Steering Wheel Inspection. 86
Steering Wheel, Adjustment 26
Stopping the Engine. 42
Storage 98-102
Storage Area 102
Storage Compartments. 32
Storage, Battery 96
Storage, Covers 102
Storage, Fluid Levels. 102
Storage, Oil and Filter 101
Storage, Removal. 103
Suspension Adjustment, Rear 87
Switches
AWD Switch 25
Differential Lock Switch 25
Ignition. 24
Light. 24
Mode Button 23

T

Tachometer 37
Throttle Body. 83
Throttle Freeplay 82
Throttle Freeplay Adjustment 83
Throttle Freeplay Inspection 82
Throttle Pedal 26
Throttle System 82-83
Tilt Steering 26
Tire Tread Depth 88
Tires 88-89
Torque, Axle Nuts 88
Torque, Spark Plug 72
Torque, Wheel Nut 88
Towing Loads 52
Towing Speed 52
Trailer Hitch 26
Transmission (4X4/CREW) 67
Transmission (6X6) 68
Transmission Operation. 76
Transmission System. 76-77
Transmission Warning. 76
Transmission, Drying 77
Transporting the Vehicle 103
Tread Depth 88

V

Vehicle Identification Numbers. 6
Vehicle Immersion 78
Vehicle Transport 103

W

Warning Symbols 4
Warning, Transmission Modification 76
Washing the Vehicle 98-99
Water, Immersion of Vehicle 78
Weight Capacity 51
Wheel Installation 89
Wheel Nut Inspection 88
Wheel Nut Torque 88
Wheel Removal 89

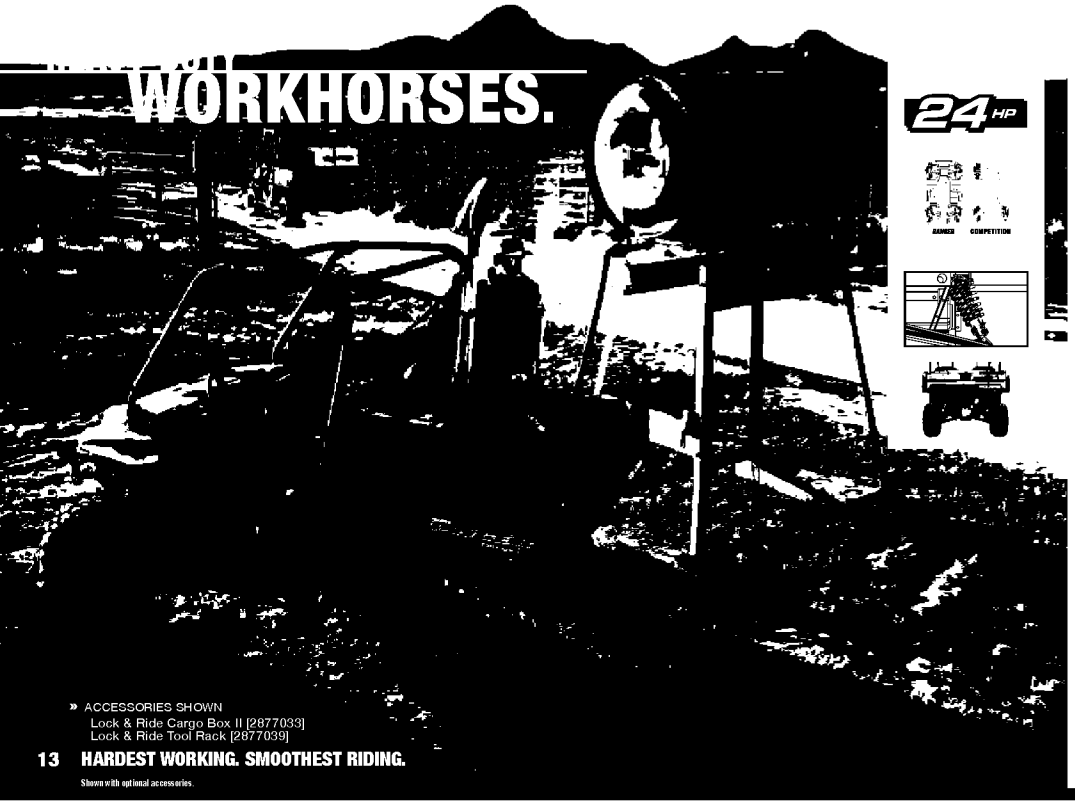

» ACCESSORIES SHOWN
Lock & Ride Cargo Box II [2877033]
Lock & Ride Tool Rack [2877039]

Shown with optional accessories.

24 HP

NEW! *RANGER* DIESEL
DIESEL FUEL OPTION

HARDEST WORKING

DIESEL POWER
All of the features of *RANGER* XP, but with an ISO-mounted YANMAR®[1] diesel powerplant for low vibration and lower-speed torque. Plus a fully sealed transmission and plenty of horsepower to get the job done.

ON-DEMAND TRUE ALL-WHEEL DRIVE (AWD) WITH VERSATRAC TURF MODE
True AWD keeps you moving, automatically engaging all four wheels when you need more forward traction and reverting back to 2WD when you don't. When in 2WD, the VersaTrac Turf Mode switch unlocks the rear differential for easier, tighter turns that won't tear up your grass.

SMOOTHEST RIDING

FULLY ADJUSTABLE SUSPENSION
The only 4-corner adjustable suspension system. Dual A-Arm with exclusive top mounting-point adjustability. Adjust to softer setting for trail riding or stiffer for heavy-duty work. Front: 9.6" suspension travel. Rear: 9" suspension travel.

INDEPENDENT REAR SUSPENSION (IRS) AND HIGH GROUND CLEARANCE
In rough terrain, our legendary smooth IRS and a full 12" of ground clearance combine to keep the ride smooth for you and your passengers, as well as your gear and equipment.

Best Application:

More Features:
- **55-amp Alternator to Run Many Hard-Working Electrical Accessories**
- **40% More Fuel Range Than Comparable Gas Model (*RANGER* XP)***
- **Headlight Adjustability With High/Low Switch Operation (60/55 W)**
- **Driver and Passenger Side Nets**
- **90% of Peak Torque Available at 1,600 RPM for Low-Speed Pulling**

*Actual range improvements might vary by consumer and depend on driving style, terrain, tire pressures, and installed accessories.

SAGE GREEN

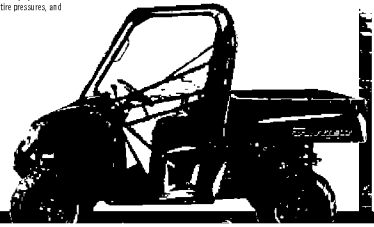

RANGER HD 800 EPS
HEAVY-DUTY WORKHORSE

SAGE GREEN

HARDEST WORKING

ACCESSORY LIFT & CARRY
The accessory Lift & Carry hydraulic system lets you move, plow, or grapple up to 500-lb. loads. Fully remove the hard-working accessories in less than one minute.

SMOOTHEST RIDING

SELF-LEVELING SUSPENSION
When the *RANGER* HD—loaded with up to 1,000 lbs. in the box—starts moving, the Nivomat®[1] rear shocks automatically lift the loaded box to near its unloaded height, maximizing suspension travel and ground clearance, for a smooth ride in heavy-duty work applications.

Best Application:

More Features:
- **800 Twin Electronic Fuel Injection Engine, 40 HP**
- **On-Demand True All-Wheel Drive (AWD) With VersaTrac Turf Mode**
- **Electronic Power Steering**
- **NEW! 20% More Headlight Power With High/Low Switch Operation (60/55 W)**
- **NEW! 20% Better Fuel Range Than Previous Year's Model***

*Actual range improvements might vary by consumer and depend on driving style, terrain, tire pressures, and installed accessories.

RANGER 6X6 800
UNMATCHED TRACTION AND CAPACITY

SAGE GREEN SOLAR RED

HARDEST WORKING

ON-DEMAND TRUE SIX-WHEEL DRIVE (6WD)
True AWD keeps you moving, automatically engaging all six wheels when you need more forward traction and reverting back to the rear four wheels when you don't.

MONSTROUS 1-TON TOWING
The strength to tow 2,000 lbs., far more than the competition, means you can tackle the toughest jobs with confidence. Features a standard 2" hitch receiver.

Best Application:

More Features:
- **800 Twin Electronic Fuel Injection Engine, 40 HP**
- **Six-Wheel Independent Suspension With 12" Ground Clearance**
- **Big, Lockable Job Box**
- **NEW! 20% More Headlight Power With High/Low Switch Operation (60/55 W)**

U.S. Consumer Product Safety Commission

Task Number: 130325HNE0001

Date: 02/26/2013

Status of Missing Document(s)

The official records below were requested for this investigation report, but could not be obtained:

1. Medical Records
2.
3.
4.
5.
6.

IDI #: 130325HNE0001

Exhibit #: 9

Utility Vehicle Data Record Sheet

Front

A Driver	B Right Front Passenger
X Left Rear Passenger	X Right Rear Passenger
Cargo Bed	

Rear

The Utility Vehicle

A:		
Age: 15	Height: na	
Gender: M	Weight: na	
Helmet (Y/N): N	Seatbelt (Y/N): N	
Killed/Injured/Neither/Unknown: Killed		
Injury Description: Blunt force trauma		
Did vehicle land on victim: Yes		
Ejected (Either partially or fully): Fully		

B:		
Age: 15	Height: na	
Gender: M	Weight: na	
Helmet (Y/N): N	Seatbelt (Y/N): N	
Killed/Injured/Neither/Unknown: Injured		
Injury Description: na		
Did vehicle land on victim: No		
Ejected (Either partially or fully): No		

C:		
Age:	Height:	
Gender:	Weight:	
Helmet (Y/N):	Seatbelt (Y/N):	
Killed/Injured/Neither/Unknown:		
Injury Description:		
Did vehicle land on victim:		
Ejected (Either partially or fully):		

D:		
Age:	Height:	
Gender:	Weight:	
Helmet (Y/N):	Seatbelt (Y/N):	
Killed/Injured/Neither/Unknown:		
Injury Description:		
Did vehicle land on victim:		
Ejected (Either partially or fully):		

E:		
Age:	Height:	
Gender:	Weight:	
Helmet (Y/N):	Seatbelt (Y/N):	
Killed/Injured/Neither/Unknown:		
Injury Description:		
Did vehicle land on victim:		
Ejected (Either partially or fully):		

F:		
Age:	Height:	
Gender:	Weight:	
Helmet (Y/N):	Seatbelt (Y/N):	
Killed/Injured/Neither/Unknown:		
Injury Description:		
Did vehicle land on victim:		
Ejected (Either partially or fully):		

*If victim(s) were injured/killed, please include the other relevant information requested in the assignment message in the text of the IDI

Using the figure on the left, please fill in where the occupants were in the vehicle at the time of the incident using A, B, C, etc. to identify the occupant(s)' location. Fill in the occupants' characteristics in the corresponding location on the right. For example, the driver could be assigned to the letter 'A' and the letter 'A' would be placed in the diagram in the box designated 'Driver', and the drivers' characteristics would be filled on the right. If there were more than six occupants (or more room is needed), please add the other passenger(s)' information (or any other information) as needed. If information is not available, please indicate by 'na'.

Note: Not all locations indicated on the diagram exist in all types of utility vehicles. Please only use the locations that correspond to the incident vehicle. Please place an 'X' over the area if the vehicle was not equipped with the component.

Save

(b)(6)

EPIDEMIOLOGIC INVESTIGATION REPORT

1. Task Number	2. Investigator's ID	
130326HCC1688	8919	

3. Office Code	4. Date of Accident YR MO DAY	5. Date Initiated YR MO DAY
810	2012 07 04	2013 03 27

6. Synopsis of Accident or Complaint **UPC**

A 20 year old male was operating a utility vehicle with two passengers when he drove over a water pump pipe, lost control of the vehicle and struck a wooden fence and a water container. The victim suffered blunt force trauma to his thorax resulting in a ruptured spleen and internal bleeding. The victim died at his home later that day. The passengers were not injured.

7. Location (Home, School, etc)	8. City	9. State
1 - HOME	PRINCE WILLIAM COUNT	VA

10A. First Product	10B. Trade/Brand Name	10C. Model Number
5044 - UTILITY VEHICLES	POLARIS	RANGER

10D. Manufacturer Name and Address
POLARIS
1225 HIGHWAY 165 NORTH
MINNEAPOLIS, MN 55441

11A. Second Product	11B. Trade/Brand Name	11C. Model Number
1871 - FENCES OR FENCE POS	UNKNOWN	UNKNOWN

11D. Manufacturer Name and Address
UNKNOWN

12A. Hispanic or Latino	12B. Race	12C. Race Source
2 - No	1 - White Other:	3 - Official Document

13. Age of Victim	14. Sex	15. Disposition	16. Injury Diagnosis
20	1 - Male	8 - Death	62 - Intern. Org. Inj.

17. Body Part(s) Involved	18. Respondent	19. Type of Investigation	20. Time Spent (Operational / Travel)
31 - UPPER TRUNK	3 - 2nd Hand Info Only	2 - Telephone	23.00 / 0.00

21. Attachment(s)	22. Case Source	23. Sample Collection Number
9 - Multiple Attachments	14 - Death Certificate	

24. Permission to Disclose Name (Non NEISS Cases Only)

○ Yes ◉ No ○ Yes for Manuf. Only ○ Verbal ○ Written

25. Review Date	26. Reviewed By	27. Regional Office Director
05/15/2013	8930	Dennis R. Blasius

28. Distribution	29. Source Document Number
Sarah Garland; Tanya L. Topka	X1330636A

A 20 year old male was operating a utility vehicle with two passengers when he drove over a water pump pipe, lost control of the vehicle and struck a wooden fence and a water container. The victim suffered blunt force trauma to his thorax, a ruptured spleen and internal bleeding. He victim died at his home later that day.

The information in this report was obtained from the Prince William County Police Department and the Office of the Chief Medical Examiner for Manassas, VA. This in-depth investigation was initiated by a MECAP report. The owners of the utility vehicle could not be reached for an on-site.

According to the Autopsy report, Exhibit 1, the victim is a 20 year old male who was 75 ½ inches tall and weighed 205 pounds. The Toxicology Report, Exhibit 2, indicates that ethanol and marijuana were found in the victim's blood. The victim was not wearing a helmet or seatbelt at the time of the incident. It is not known if the victim had any previous experience driving utility or off-road vehicles (Question 9).

The Police Report, Exhibit 3, states that the 20 year old victim left home on July 3, 2012 around 10:00 p.m. to attend a party. The party was at a house on several acres of land with a horse stable. The report states that the homeowners were away and their son was overseeing the property. The homeowners' son invited about 15 people over and he told police after the incident that everyone at the party was drinking and "somewhat intoxicated."

The report states that a green "4 x 4" (utility vehicle) that resembled a golf cart with a cage was parked in a shed on the property. The reporting detective stated that the vehicle had a seatbelt. It is unknown if there were other aftermarket modifications (Question 2). (Refer to photos 1 and 2 in Exhibit 4.)

At approximately 4:00 a.m. on July 4, 2012, the 20 year old victim found the ignition key for the UTV. The report states that the homeowners' son hid the key in the left side console hoping that no one would find it.

The report states that two other people did loops around the shed on the UTV before the victim drove the vehicle.

At the time of the incident, the victim was driving the UTV with two passengers. One passenger was seated on the far right side of the front bench seat and the other was in the middle. (The age, gender, height, and weight of the passengers are not available - Question 5). Neither the operator nor the passengers were wearing helmets. The report states that the victim was doing "donuts" in the mud prior to the incident. The report states that it was dark outside but a light from the stable and the UTV's headlights allowed the victim to see where he was going.

Passengers told police that the victim made a turn behind the shed and was heading towards the stable when he veered to the right and struck a wooden fence at a 45 degree angle. The UTV was travelling approximately 30 mph at the time of the incident. After the incident, the passengers found the victim lying on the ground, holding his chest and complaining that he was having difficulty breathing. The victim was not bleeding. The passengers said they did not know how the victim sustained his injury.

The passengers went to the house and told the homeowner's son that the victim had crashed the UTV into the fence. The homeowner's son went down to the field to examine the damage and discovered that the victim appeared to be in pain. The homeowner's son and the passengers helped the victim back to the house and asked him if he needed to go to the hospital. The victim stated that he did not want to go to the hospital and asked them to call his parents.

The victim's parents picked him up 45 minutes later. They arrived home with the victim between 5:30 - 6:30 a.m., and layed him down on the couch. The report states that the victim's family planned to take him to the hospital later in the day when his mother returned from work.

A family member checked on the victim at 9:00 a.m. and found him lying on the bathroom floor with the toilet seat ripped off the toilet bowl. They took the victim back to couch and checked on him again at 10:00 a.m. The report states that the victim seemed, "Ok" but was warm to the touch. The victim was checked on again at approximately 11:00 a.m. at which time he was found unresponsive and not breathing. The victim's family immediately called 911 and performed CPR until paramedics arrived at 11:26 a.m. The EMS report, Exhibit 5, states that paramedics discontinued CPR en route to the hospital. The victim was pronounced dead at the hospital on July 4, 2012 at 11:36 a.m.

The autopsy report states the victim had blunt force trauma to his thorax with resultant injuries to his left lung and his spleen. The victim's injures caused severe bleeding within his abdominal cavity. The cause of death was blunt force trauma to the thorax and the manner was accident.

Detectives visited the incident scene on July 4, 2012. They determined that the utility vehicle was driven from the house past the horse stable and into the fence. The UTV struck a water pipe protruding from the ground and continued to travel until it collided with the fence and a water container. Part of the fence broke the windshield and struck the back right passenger seat, damaging the seat back (see Photos 1 and 2 in Exhibit 4).

During a May 8, 2013 telephone interview, the reporting detective stated that scene recreation photos show the house in background and the general path the victim was on prior to running over the water pump pipe and striking the fence. He stated that the victim was ejected from the UTV and that the vehicle did not roll, flip, or tip over, and did not land on the victim. He stated that the grassy field where the incident occurred was flat.

PRODUCT IDENTIFICATION:

Utility Vehicle: Product Code (5044)

Model:	Ranger
VIN#:	Not available
Model Year:	Not available
Manufacturer:	Polaris 1225 Highway 169 North Minneapolis, MN 55441
Retailer:	Not available

The date of manufacture and purchase, serial number, cost are not available and it is unknown if the vehicle was bought new, used, or was rented (Question 1). The vehicle had a seatbelt but photos of the seat belt are not available and the type of belt is not known (Question 3). The odometer measure is also not available (Question 4).

EXHIBITS:

1. Autopsy Report
2. Toxicology Report *Eqphkf gpvkcn/"Gzenwf gf +
3. Police Report "*Eqphkf gpvkcn/"Gzenwf gf +
4. Photographs (2)
5. EMS Report
6. Respondent List
7. UTV Data Record Sheet

130326HCC1688

PRINCE WILLIAM COUNTY POLICE DEPARTMENT - PRINCE WILLIAM, VA
INCIDENT INFORMATION

Case Number	Beat	RD	Shift	Date Reported	Time	Investigator Assigned	Code #	Gang Related	Original Report / Supplement
[redacted]	A13	1414	DAY	07/04/2012	1111	D. HARRIS		☐ Yes ☒ No	☒ / ☐

Occured	Date	Time	DOW	AND	Date	Time	DOW	Offense Location
☒ On ☐ Between	07/04/2012	1136	WED					[redacted]

Offense	UCR Code	Offense Description		# Premises Entered	Type Security	Type Weapon/Force
1	111	[redacted]	☐ (A) Attempted ☒ (C) Completed			

Hate/Bias	Type of Premise	Criminal Activity	Offender Used	Entry	Exit	How Offender Left Scene
No	20		A			

Offense	UCR Code	Offense Description		# Premises Entered	Type Security	Type Weapon/Force
			☐ (A) Attempted ☐ (C) Completed			

Hate/Bias	Type of Premise	Criminal Activity	Offender Used	Entry	Exit	How Offender Left Scene

Victim #	Name (Last, First, Middle)	Race	Sex	Date of Birth	Social Security #
1	[redacted]	[redacted]	[redacted]	[redacted]	[redacted]

Address (Number, Street)	Apt	Resident Status	Ethnicity	Employer/Occupation/School
[redacted]		☐ R ☐ N ☐ U	☐ H ☐ N ☐ U	[redacted]

City	State	Zip	Home Phone Number	Business Phone Number	Cellular Phone Number
[redacted]	[redacted]	[redacted]			[redacted]

Victim Related to Offense #	Victim Related to Offender #	Victim Injury(ies)	Victim Type	Justifiable Homicide
☒ 1 ☐ 2 ☐ 3 ☐ 4 ☐ 5	VO	I	I	

Victim #	Name (Last, First, Middle)	Race	Sex	Date of Birth	Social Security #

Address (Number, Street)	Apt	Resident Status	Ethnicity	Employer/Occupation/School
		☐ R ☐ N ☐ U	☐ H ☐ N ☐ U	

City	State	Zip	Home Phone Number	Business Phone Number	Cellular Phone Number

Victim Related to Offense #	Victim Related to Offender #	Victim Injury(ies)	Victim Type	Justifiable Homicide
☐ 1 ☐ 2 ☐ 3 ☐ 4 ☐ 5				

☒ Reporting Person # 1 (If different from Victim) ☐ Witness # ☐ Other #

Name (Last, First, Middle)	Race	Sex	Date of Birth	Social Security #	Employer/Occupation/School
[redacted]	[redacted]	[redacted]	[redacted]		

Address (Number, Street)	Apt	City	State	Zip	Home Phone	Business Phone	Cellular Phone
[redacted]		[redacted]	[redacted]	[redacted]			[redacted]

☐ Reporting Person # (If different from Victim) ☐ Witness # ☐ Other #

Name (Last, First, Middle)	Race	Sex	Date of Birth	Social Security #	Employer/Occupation/School

Address (Number, Street)	Apt	City	State	Zip	Home Phone	Business Phone	Cellular Phone

Veh #	Vehicle Status	Year	Make	Model	Style	Color	License Plate	State
	☐ Stolen ☐ Recovered ☐ Target ☐ Suspect							

VIN	Other Identifying Marks	Stolen Value	Date Recovered	Recovered Value

Entered / Cleared	Date	Vehicle Owner Name (Last, First, Middle)
☐ Yes ☐ No ☐ NCIC ☐ VCIN / ☐ Yes ☐ No ☐ NCIC ☐ VCIN		

Address (Number, Street)	Apt	City	State	Zip

Reporting Member/Code#	Date	Clerk #/Date Entered
Buckley, Brian P. / 2348	07/04/2012	NGX 11/12/2012

Original to Records / After Copy Made for CID	CID Supervisor Name	Patrol Supervisor Name	Case Disposition	Basis for Exception
	BG/1413	[illegible]/1383	Active ☒	Death of Suspect ☐
			Inactive ☐	Prosecution Declined ☐
			Unfounded ☐	Extradition Declined ☐
	Date 7-5-12	Date 7/4/12	Arrest A ☐ J ☐	Refused to Cooperate ☐
			Exception A ☐ J ☐	Juvenile, No Custody ☐

Case Number	Victim 1	Victim 2
[redacted]	[redacted]	

☒ Offender # ☐ Arrestee #

Additional Description: [redacted] For juvenile offenders, list parents names, address, home and work phone numbers.

Name (Last, First, Middle)	AKA	Race	Sex	Ethnicity	Social Security #
[redacted]		[redacted]	[redacted]	[redacted]	[redacted]

Address (Number, Street)	Apt	Resident Status	Employer/Occupation/School
[redacted]		[redacted]	[redacted]

City	State	Zip	Home Phone	Business Phone	Cellular Phone
[redacted]	[redacted]	[redacted]			[redacted]

Date of Birth	Exact Age	Age Range	Height	Weight	Hair Color	Eye Color	Scars, Marks, Tattoos
[redacted]		to	6'4"	210	[redacted]	[redacted]	[redacted]

Hair	Hair Style	Facial Hair	Build	Complexion	Appearance	Demeanor	Speech	Hands	Place of Birth	Arrest/Petition Date
4	5	2	MUSC	2	14	14	1	UK	UNK	

MANDATORY INQUIRY ON PHYSICAL CUSTODIAL ARREST

These three questions shall be asked of all persons who are under physical custodial arrest.

What is your place of birth? (City & County)	Of what country are you a citizen and/or national?	Are you legally present in the United States?
		☐ Yes ☐ No

☐ Offender # ☐ Arrestee #

Additional Description: For juvenile offenders, list parents names, address, home and work phone numbers.

Name (Last, First, Middle)	AKA	Race	Sex	Ethnicity	Social Security #
				☐ H ☐ N ☐ U	

Address (Number, Street)	Apt	Resident Status	Employer/Occupation/School
		☐ R ☐ N ☐ U	

City	State	Zip	Home Phone	Business Phone	Cellular Phone

Date of Birth	Exact Age	Age Range	Height	Weight	Hair Color	Eye Color	Scars, Marks, Tattoos
		to					

Hair	Hair Style	Facial Hair	Build	Complexion	Appearance	Demeanor	Speech	Hands	Place of Birth	Arrest/Petition Date

MANDATORY INQUIRY ON PHYSICAL CUSTODIAL ARREST

These three questions shall be asked of all persons who are under physical custodial arrest.

What is your place of birth? (City & Country)	Of what country are you a citizen and/or national?	Are you legally present in the United States?
		☐ Yes ☐ No

Type Loss	Property Code	Qty	Description	Serial Number	Vic #	Stolen/Damaged Value	Recovered Date	Recovered Value	Entered NCIC/VCIN
									☐ Y ☐ N
									☐ Y ☐ N
									☐ Y ☐ N

Total Number of Vehicles Stolen	Total Number of Vehicles Recovered	Total Amount of Property Stolen/Damage	Total Amount of Property Recovered

Suspected Drug Type	Estimated Quantity	Measurement/Estimate	Estimated Value
Suspected Drug Type	Estimated Quantity	Measurement/Estimate	Estimated Value

Office Applied Type Activity	Type Assignment	Malicious Wounding/Homicide Circumstances	Method of Entry	Offenders Actions	Condition of Premise	Tools Used

Narrative

See attached narrative sheet.

PRINCE WILLIAM COUNTY POLICE DEPARTMENT - PRINCE WILLIAM, VIRGINIA
NARRATIVE INFORMATION

CASE NUMBER: [redacted]	BEAT: A13	PAGE: 3 OF 3
OFFENSE(S): Unattended Death		
VICTIM(S) NAME: [redacted]		

On 07/04/2012 at 1111hrs, I was dispatched to [redacted]2 in reference to DOA. Once on scene I saw the ambulance loading the victim, [redacted] into the medical vehicle. I made minimal contact with [redacted], for [redacted] was in a hurry to follow the ambulance. I got [redacted] brief information and entered the residence where I began my investigation.

[redacted] took charge and spoke for all of them. He stated that they did not know where [redacted] was at the previous night. To their knowledge, the [redacted] left and picked [redacted] up at an unknown location, and returned around 0500 hrs. At this point they informed me that [redacted] went to rest on the couch where [redacted] slept. They all awoke around 1100 hrs to [redacted] screaming. [redacted] called 911 and [redacted] was given instructions to begin and sustain CPR until EMS arrived. [redacted] and his medical crew of Medical Vehicle 507 arrived on scene and took over CPR. Lt. [redacted] stated that CPR continued until [redacted] was in the ambulance. They stopped CPR in route to the hospital. Following their explanation, I secured the scene, made our supervisor direct, and requested CID. I took pictures of the family room and couch where [redacted] was, as well as [redacted] bedroom. The pictures have been submitted into the TRAQ system. I then left for Prince William County Hospital, where [redacted] had been taken.

Once at the hospital, I was immediately informed by nurse [redacted] that [redacted] was confirmed dead at 1136 hrs [redacted]. I then spoke to the [redacted] could not recall the exact residence where [redacted] was. He only remembered that it was located down [redacted] and had a sign in front stating "[redacted]". He stated that [redacted] called them around 0500 hrs to be picked up [redacted], left and picked [redacted] up. [redacted] admitted to drinking, but there was no drug usage. [redacted] also complained of broken ribs, but did not want to go to the hospital. [redacted] stated that [redacted] had sustained the injury during a crash of a four wheeler [redacted] said it was a caged four wheeler looking like a golf cart. [redacted] confirmed that they arrived back at the residence around 0530 hrs. They laid [redacted] on the couch and [redacted] left for work. They had plans to take him to the hospital later in the day [redacted] checked on [redacted] at 0900 hrs and [redacted] was in the bathroom laying on the ground with the toilet seat ripped off and a broken picture. [redacted] took [redacted] back to the couch and laid him back down. [redacted] again checked on [redacted] at 1000 hrs, and [redacted] seemed ok, but was warm. The last time [redacted] checked was 1100 hrs and [redacted] was not breathing. [redacted] reported that he heard gurgling but thought it was a joke and went back to bed. [redacted] screamed and 911 was called. He attempted to perform CPR until the medical units arrived.

[redacted] informed me that the residence where [redacted] was is [redacted], [redacted] retrieved that address off the GPS that they used. [redacted] said that the parents of the house were gone, and that their son [redacted], was overseeing the residence. [redacted] stated that when they arrived, there were approximately 15 vehicles. [redacted] encountered [redacted] who confirmed the drinking and stated that [redacted] had crashed into a fence.

Det. Harris showed up on scene and assumed the investigation.

Case Status : TOT Det. Harris D. P.

REPORTING OFFICER	CODE	INVESTIGATING OFFICER/DETECTIVE	DATE
Buckley, Brian P.	2 3 4 8	D HARRIS	07/04/2012

CID SUPERVISOR / DATE	PATROL SUPERVISOR / DATE	CASE DISPOSITION	BASIS FOR EXCEPTION
BG/1413	[illegible]/1383	ACTIVE [X]	DEATH OF SUSPECT [ ]
7-5-12	7/4/12	INACTIVE [ ]	PROSECUTION DECLINED [ ]
		UNFOUNDED [ ]	EXTRADITION DECLINED [ ]
		ARREST A [ ] J [ ]	REFUSED TO COOPERATE [ ]
		EXCEPTION A [ ] J [ ]	JUVENILE, NO CUSTODY [ ]

JUL 9 2012

PRINCE WILLIAM COUNTY POLICE DEPARTMENT - PRINCE WILLIAM, VIRGINIA
NARRATIVE INFORMATION

CASE NUMBER: [redacted]	BEAT:	PAGE: 1 OF 1
OFFENSE(S): ATTENDED DEATH		
VICTIM(S) NAME: [redacted]		

This is a supplemental report for the above case number.

On 07-04-12, I interviewed [redacted] in reference to the above case number.

[redacted] told me that he attended a party yesterday (07-03-12) at a friends' house ([redacted]'s residence [redacted] located somewhere [redacted] and he arrived there close to 2200 hrs with his girlfriend [redacted] was there as well with his girlfriend [redacted] saw [redacted] drinking alcohol ([redacted] beer and [redacted]) and probably smoked some marijuana [redacted] went to sleep at 0200 hrs because he had to get up early for work and didn't see [redacted] drive an ATV during the time he was up [redacted] was not aware of [redacted]'s accident and he's just been told that [redacted] had died. [redacted] was known "to do crazy stuff" and that one time he smashed a "glass to his head and was walking with a piece of the broken glass stuck to his head and yelling and screaming yeah, look at me". There were other kids in the party but [redacted] didn't know them because they're [redacted]'s friends.

CASE STATUS- TOT Det Harris D.

REPORTING OFFICER	CODE	INVESTIGATING OFFICER/DETECTIVE	DATE
Det. Pinedo G.M	1 6 1 4	Det. Pinedo	07-04-12

CID SUPERVISOR / DATE	PATROL SUPERVISOR / DATE	CASE DISPOSITION	BASIS FOR EXCEPTION
MAG		ACTIVE [X]	DEATH OF SUSPECT [ ]
7/10/12		INACTIVE [ ]	PROSECUTION DECLINED [ ]
		UNFOUNDED [ ]	EXTRADITION DECLINED [ ]
		ARREST A [ ] J [ ]	REFUSED TO COOPERATE [ ]
		EXCEPTION A [ ] J [ ]	JUVENILE, NO CUSTODY [ ]

PD 213/Revised 02/08/2011

PRINCE WILLIAM COUNTY POLICE DEPARTMENT - PRINCE WILLIAM, VIRGINIA
NARRATIVE INFORMATION

JUL 12 2012

CASE NUMBER: [redacted]	BEAT: A13	PAGE: 1 OF 3

OFFENSE(S): UNATTENDED DEATH

VICTIM(S) NAME: [redacted]

This is a supplement to the original report.

On 07/04/2012, I assisted Detective D.HARRIS in this case.
I responded to [redacted]Dr and met Officer YUNG and 1st Sgt PEAK. They advised me that the family of the victim were at the Prince William Hospital and no one was home. The Officers did not have any information about what happened and advised me that the Medic unit had already transported the victim prior to their arrival. Officer YUNG showed me the couch where the victim was found lying on. She stated that she took photos of the couch and the scene.
I advised her to stay at the residence and keep it secure while Detective HARRIS was interviewing the family members at the Hospital. I told her that as soon as we determine that the residence was not needed, I will call her and advise her to clear the scene. I contacted Detective HARRIS and he stated that the victim was at a party last night at [redacted] where he was involved in an ATV accident. He stated that the victim's parents picked him up in the early morning hours and took him home. The victim lied down on the couch where he was found unresponsive later.

1st Sgt PEAK and myself responded to [redacted] is a single family home located on several acres that include a horse stable. I made contact with three white males at the residence. A[redacted] was the owners son ([redacted]). He stated that they had few friends over last night for a get together. I saw empty cans of beer in the residence and I smelled the odor of alcoholic beverage on [redacted] breath. I asked them if [redacted] was at the party last night and they said yes. They asked me if he was ok because he had an accident and I advised them that he passed away at the Hospital. They were very upset and distraught about the news. I began interviewing them.

INTERVIEW WITH [redacted]

[redacted]

[redacted] stated that he invited about 15 friends over last night. He said that everyone was drinking and somewhat intoxicated. He took me down to the utility shed where the ATV was parked. I saw a green Polaris 4X4 RANGER in the shed. I saw that the windshield was broken and the back rest of the right side of the seat was torn. He then showed me the fence to the right side of the horse barn. I saw three sections of the fence torn (approx 8 feet each). I saw one ground 4x4 post completely broken off from the surface. I saw a water pump pipe bent towards the fence. I saw a broken large water container on the other side of the post. I saw tire marks in the grass from the direction of the house towards the fence. Looking at all these signs, I concluded that the Polaris was driven from the direction of the house past the horse stable and into the fence. The Polaris struck the water pipe protruding from the ground causing it to bend. The Polaris then continued and collided into the fence causing the complete destruction of one 8 foot section and the partial destruction of two other

REPORTING OFFICER	CODE	INVESTIGATING OFFICER/DETECTIVE	DATE
DETECTIVE JOSEPH MEDAWAR	1 0 8 0	MEDAWAR	07/06/2012

CID SUPERVISOR / DATE	PATROL SUPERVISOR / DATE	CASE DISPOSITION	BASIS FOR EXCEPTION
MAG		ACTIVE ☒	DEATH OF SUSPECT ☐
7/10/12		INACTIVE ☐	PROSECUTION DECLINED ☐
		UNFOUNDED ☐	EXTRADITION DECLINED ☐
		ARREST A ☐ J ☐	REFUSED TO COOPERATE ☐
		EXCEPTION A ☐ J ☐	JUVENILE, NO CUSTODY ☐

PRINCE WILLIAM COUNTY POLICE DEPARTMENT - PRINCE WILLIAM, VIRGINIA
NARRATIVE INFORMATION

CASE NUMBER: [redacted]	BEAT: A13	PAGE: 2 OF 3

OFFENSE(S): UNATTENDED DEATH

VICTIM(S) NAME: [redacted]

sections. The Polaris then struck the water container and came to a stop. Pieces of the fence projected towards the windshield causing it to break from the passenger side. The fence piece than struck the far passenger back seat causing the indentation in the leather that resembles the wood board.
After observing the scene, I asked [redacted] if he saw the accident. He said no but he was told about it by the two passengers that were riding with [redacted]. He identified them as [redacted] and [redacted]. He did not know where they exactly live but stated that they live in [redacted]. He said that in the early morning hours, approx 0400 hrs, [redacted] told him that [redacted] crashed the ATV into the fence. [redacted] went down to the field and examined the damage. He saw [redacted] who appeared to be in pain. He asked him if he needed to go to the hospital and [redacted] said no. They helped [redacted] back to the house. [redacted] asked them to call his parents and they did. [redacted]'s parents came in after 45 min and picked him up.
[redacted] said that he did not see any blood and he did not think that [redacted] was hurt bad enough to cause his death. He said that [redacted] was holding his abdomen and moaning. He said that they offered him medical attention but he refused.
I asked him if [redacted] was drinking or intoxicated. He said, "Yes sir, we were all drinking and pretty drunk."
I asked him if [redacted] was drunk and he said yes.
I asked him if he gave them permission to drive the Polaris.
He said that he placed the ignition key in the left side console hoping that they won't find it but apparently they found it and drove it.
I asked him if he saw [redacted] driving the ATV.
He said, "Yes, but I didn't stop them because I figured they were just going to drive it around for few minutes".

INTERVIEW WITH [redacted]

[redacted]

[redacted] said that he picked up [redacted] from his home at around 2030 hrs. They came to [redacted]'s house for a get together for some drinks. He said that [redacted] was driving the Polaris with [redacted] and [redacted] and was doing "donuts" in the mud. He said that it was dark but the light from the stable and the headlights from the Polaris were sufficient to be able to see.
[redacted] said that he saw the accident because he was standing by the shed with [redacted]. He said that he saw [redacted] was driving and [redacted] sitting in the middle and [redacted] to the far right side. He saw [redacted] loop around the shed and come down from the direction of the house towards the fence. He saw the Polaris collide with the fence head on. He said that no one was ejected and he rushed in to check on them. [redacted] said that they were not hurt. [redacted] was holding his abdomen and moaning. He asked him if he was ok and he said yes. He helped him walk up to the house and asked him if he needed to go to the Hospital. [redacted] said no and to just call his parents and [redacted] did.
[redacted] said that he did not see any blood and he did not appear to be hurt bad. He figured that his parents would check on him and take him to a doctor later. He said that [redacted] parents came over and took him.
I asked [redacted] was intoxicated and he said yes. He said they were all intoxicated from drinking beer and [redacted].
[redacted] brother [redacted]) said that he was asleep at the time of the accident and did not see anything.

REPORTING OFFICER	CODE	INVESTIGATING OFFICER/DETECTIVE	DATE
DETECTIVE JOSEPH MEDAWAR	1 0 8 0	MEDAWAR	07/06/2012

CID SUPERVISOR / DATE	PATROL SUPERVISOR / DATE	CASE DISPOSITION	BASIS FOR EXCEPTION
		ACTIVE ☐	DEATH OF SUSPECT ☐
		INACTIVE ☐	PROSECUTION DECLINED ☐
		UNFOUNDED ☐	EXTRADITION DECLINED ☐
		ARREST A ☐ J ☐	REFUSED TO COOPERATE ☐
		EXCEPTION A ☐ J ☐	JUVENILE, NO CUSTODY ☐

PRINCE WILLIAM COUNTY POLICE DEPARTMENT - PRINCE WILLIAM, VIRGINIA
NARRATIVE INFORMATION

CASE NUMBER: [redacted]	BEAT: A13	PAGE: 3 OF 3

OFFENSE(S): UNATTENDED DEATH

VICTIM(S) NAME: [redacted]

INTERVIEW WITH [redacted]

[redacted]

[redacted] stated that he was standing next to [redacted] when the accident took place. He said that he and [redacted] drove the ATV before [redacted] did and did loops around the shed. I asked him who was driving when the accident took place. He said [redacted] was driving [redacted] was in the middle and [redacted] was on the far right. He saw the [redacted] driving down towards the horse stable and saw it collide with the fence. He rushed in to check on his friends and saw [redacted] in pain. He did not see any blood and saw him holding his abdomen and moaning. He asked him if he needed to go to the hospital and [redacted] said no. They helped walk to the house where [redacted] called his parents to come pick him up and they did.

INTERVIEW WITH [redacted]

On 07/06/2012, Detective HARRIS and I responded to [redacted] and interviewed [redacted] They both confirmed that everyone at [redacted] house was intoxicated the night the incident took place. [redacted] said they all took turns driving the ATV around the field. He said that [redacted] found the key to the ATV in a console in the dashboard. [redacted] said that [redacted] was driving, [redacted] was in the middle and he was on the far right side. He said that [redacted] made the turn around behind the utility shed and was heading down towards the stable when he veered to the right and struck the fence at a 45 degree angle. He said that the speed was approximately [redacted]0 mph when they struck the fence. He recall seeing [redacted] on the ground holding his chest and complaining of pain. [redacted] and [redacted] could not recall how did [redacted] receive his injury. They both said that he was not bleeding but was complaining of pain in his chest and difficulty breathing. [redacted] ran up to the house and told [redacted] that they just crashed his ATV into the fence and that they should call 911. He said that [redacted] told him not to and ran down to the field to look. [redacted] was then assisted back to the house and placed on the couch. [redacted] asked him if he wants them to call 911 for him and [redacted] said no and to just call his parents for him. [redacted] called [redacted] at 0457 hrs. He spoke to [redacted]'s mother and told her that [redacted] was involved in an accident and she needs to come pick him up. She asked for directions and he gave the phone to [redacted] to give her directions to his house. [redacted] said that [redacted] parents were having difficulty finding the residence and he dialed several numbers for [redacted]'s parents between 0457 hrs and 0516 hrs and [redacted] spoke to them. The numbers were [redacted] and [redacted] The last number dialed was [redacted] and [redacted] talked to his parents for 5 minutes. [redacted] said that [redacted] parents eventually made it to the house at approximately 0600 hrs. He said that they took [redacted] and left. [redacted] and [redacted] assumed that [redacted] parents were taking him to the hospital and were shocked that they did not do that.

This case is T.O.T Detective D.HARRIS.
Cc Detective D.HARRIS.

REPORTING OFFICER	CODE	INVESTIGATING OFFICER/DETECTIVE	DATE
DETECTIVE JOSEPH MEDAWAR	1 0 8 0	MEDAWAR	07/06/2012

CID SUPERVISOR / DATE	PATROL SUPERVISOR / DATE	CASE DISPOSITION	BASIS FOR EXCEPTION
		ACTIVE ☐	DEATH OF SUSPECT ☐
		INACTIVE ☐	PROSECUTION DECLINED ☐
		UNFOUNDED ☐	EXTRADITION DECLINED ☐
		ARREST A ☐ J ☐	REFUSED TO COOPERATE ☐
		EXCEPTION A ☐ J ☐	JUVENILE, NO CUSTODY ☐

987 / date

PRINCE WILLIAM COUNTY POLICE DEPARTMENT - PRINCE WILLIAM, VIRGINIA
NARRATIVE INFORMATION

CASE NUMBER: [redacted]	BEAT: A14	PAGE: 1 OF 3

OFFENSE(S): UNATTENDED DEATH

VICTIM(S) NAME: [redacted]

On July 4, 2012 at approximately 1206, Sergeant Grantham directed me to respond to Prince William Hospital reference a 20 year old male who had reportedly been involved in an ATV accident during the early morning hours in Stafford County and was later discovered deceased at his residence. First Sergeant Peak advised the victim had been transported to the hospital and the residence was secured by a patrol officer. All family members present at the residence responded to the hospital. Detective Medawar responded to the residence and later to [redacted] where the accident occurred.

Decedent's Discovered Condition

[redacted]n discovered his son lying supine on the main level couch unresponsive and cold to the touch at approximately 1100 and called 9-1-1. (9-1-1 call was received at 1107) Medic 507 arrived on the scene at 1114 to find basic life support units performing CPR which they had assumed from Mr. [redacted] AED was put in place and advised "no shock" and the ECG monitor revealed the victim's heart rhythm was in asystole. BLS staff reported the victim's jaw was stiff and difficult to manipulate for ventilations.

Medic 507 administered resuscitative medications per protocol but no change was ever noted in the heart rhythm and Dr. [redacted] advised termination of resuscitative efforts and pronounced the victim dead at 1136.

Timeline of Events

0430 ATV utility vehicle collision into fence.

0500 Mr. and Mrs. [redacted] reporte[redacted] called them at approximately 0500 and stated, "Mom, I messed up. I've been drinking and broke my ribs." When [redacted] asked for the locatio[redacted]n put the property owner on the phone.

0600 [redacted]old me it was daylight when she arrived at 9[redacted] and [redacted] was able to walk to the car. Mr. and Mrs. [redacted] reported [redacted] moaned and appeared in pain but they did not see any obvious injury.

(Sunrise was recorded at 0548 on July 4, 2012)

0630 Mrs. [redacted]old me they arrived at their residence and [redacted] was able to walk on his own. He laid supine on the couch on the main level.

0730 [redacted]n leaves for work and observes [redacted] sitting on the toilet in the main level bathroom.

0800 [redacted] discovers [redacted] on the bathroom floor. The toilet seat is broken and a picture had been knocked off the wall. [redacted] tells [redacted]e needs to get back on the couch and assists him there.

0900 [redacted] looks down to main level and observes [redacted] sleeping on his back on the couch with his hands tucked into the waistband of his athletic shorts.

REPORTING OFFICER	CODE	INVESTIGATING OFFICER/DETECTIVE	DATE
Detective Daniel P. Harris	0 5 2 3	D. P. Harris	07/10/2012

CID SUPERVISOR / DATE	PATROL SUPERVISOR / DATE	CASE DISPOSITION	BASIS FOR EXCEPTION
MAF		ACTIVE ☐	DEATH OF SUSPECT ☐
		INACTIVE ☒	PROSECUTION DECLINED ☐
		UNFOUNDED ☐	EXTRADITION DECLINED ☐
07/11/2012		ARREST A ☐ J ☐	REFUSED TO COOPERATE ☐
		EXCEPTION A ☐ J ☐	JUVENILE, NO CUSTODY ☐

PD 213/Revised 02/06/2011

PRINCE WILLIAM COUNTY POLICE DEPARTMENT - PRINCE WILLIAM, VIRGINIA
NARRATIVE INFORMATION

CASE NUMBER: [redacted]	BEAT: A14	PAGE: 2 OF 3

OFFENSE(S): UNATTENDED DEATH

VICTIM(S) NAME: [redacted]

1000 Mr. [redacted] checks on [redacted] and noted he was warm but commented, "I didn't think to check if he was breathing."

1100 Mr. [redacted] checks on [redacted] and noticed he was cold. Discovers [redacted] is unresponsive and 9-1-1 is called.

1136 [redacted] is pronounced dead.

Mr. & Mrs. [redacted] Interview

Mrs. [redacted] stated when they picked [redacted] up on [redacted], "He wanted to go to the hospital and we were going to take him at 1pm when I got off work." When I asked what made them think [redacted] wanted to go to the hospital, Mrs. [redacted] replied, "He asked us to take him to the hospital." When I asked Mrs. [redacted] what kept them from taking [redacted] to the hospital, she replied, "I had to go to work; and [redacted] e's always been a dramatic kid." Mrs. [redacted] continued, "We didn't know it was that serious" at which point Mr. [redacted] stated, "I guess we were wrong."

I asked the [redacted] if [redacted] was intoxicated and they stated, "He didn't seem drunk."

Mrs. [redacted] re-emphsized, "I was going to meet him and his father at [redacted] Hospital when I got off at 1 o'clock."

Mr. [redacted] appeared disturbed and grieved but Mrs. [redacted] demeanor was apathetic and indifferent and she did not voice any regret for not seeking care for [redacted] although he requested it.

When I contacted Mrs. [redacted] on July 5, 2012 after the autopsy and explained [redacted] spleen was ruptured and he hemorrhaged in his abdomen, she replied, "Oh, Ok. Then there was nothing we could do." When I questioned [redacted] statement, she explained they had talked to a "doctor friend" who told them "it sounded like a ruptured spleen and you would only have 30 minutes." When I mentioned the autopsy report may differ, she replied, "I don't want to know that."

ATV Accident Summary

According to several of the decedent's friends, he was known "for doing crazy things" and had been consuming [redacted] beer, [redacted] and smoking marijuana during the party on July 3 and into the early morning hours of July 4, 2012. The decedent located the keys to a Polaris "Ranger" all-terrain utility vehicle and began driving it around the property and "doing donuts" in the field. The decedent was driving the ATV with [redacted] s seated with him on the bench seat of the vehicle and they estimated the speed to be approximately 30mph. [redacted] stated he knew they were going to collide with the 3-board fence which struck the right side of the ATV where [redacted] was seated. Neither [redacted] knew if the decedent was ejected but they first noticed him after the collision lying on his back on the ground with both arms holding his torso. The decedent was lying parallel with the broken fence in front of the ATV.

REPORTING OFFICER	CODE	INVESTIGATING OFFICER/DETECTIVE	DATE
Detective Daniel P. Harris	0 5 2 3	D. P. Harris	07/10/2012

CID SUPERVISOR / DATE	PATROL SUPERVISOR / DATE	CASE DISPOSITION	BASIS FOR EXCEPTION
MAF		ACTIVE ☐	DEATH OF SUSPECT ☐
		INACTIVE ☒	PROSECUTION DECLINED ☐
		UNFOUNDED ☐	EXTRADITION DECLINED ☐
07/11/2012		ARREST A ☐ J ☐	REFUSED TO COOPERATE ☐
		EXCEPTION A ☐ J ☐	JUVENILE, NO CUSTODY ☐

PRINCE WILLIAM COUNTY POLICE DEPARTMENT - PRINCE WILLIAM, VIRGINIA
NARRATIVE INFORMATION

CASE NUMBER: [redacted]	BEAT: A14	PAGE: 3 OF 3

OFFENSE(S): UNATTENDED DEATH

VICTIM(S) NAME: [redacted]

View of the Decedent

The decedent had a linear contusion approximately 3 inches in length that ran across his left side beneath his arm pit. The injury would be consistent with striking a board fence and ran from his back toward his nipple line. A minor abrasion to the left knee and minor contusion inside the right ankle were also noted but no other visible injuries were observed. The decedent was wearing athletic shorts and boxer briefs.

Office of the Chief Medical Examiner Notification

On July 4, 2012 at approximately 1400, I contacted OCME Investigator Kim and apprised her of the circumstances which surrounded this death and she advised the decedent would remain at Prince William Hospital and be transported to the OCME on July 5, 2012 for an autopsy.

On July 5, 2012, Dr. Chittenden performed the autopsy which revealed the decedent's spleen had ruptured and he hemorrhaged internally. Dr. Chittenden described the injury to the spleen as severe and stated it would require immediate surgery but he believed it was potentially survivable. The cause of death will be listed as "blunt force trauma to the thorax" and the manner of death is "Accident." The final autopsy report will pend the toxicology analysis.

I request inactive status on this case pending the final autopsy report.

CASE STATUS: Inactive

REPORTING OFFICER	CODE	INVESTIGATING OFFICER/DETECTIVE	DATE
Detective Daniel P. Harris	0 5 2 3	D. P. Harris	07/10/2012

CID SUPERVISOR / DATE	PATROL SUPERVISOR / DATE	CASE DISPOSITION	BASIS FOR EXCEPTION
MAF		ACTIVE ☐	DEATH OF SUSPECT ☐
07/11/2012		INACTIVE ☒	PROSECUTION DECLINED ☐
		UNFOUNDED ☐	EXTRADITION DECLINED ☐
		ARREST A ☐ J ☐	REFUSED TO COOPERATE ☐
		EXCEPTION A ☐ J ☐	JUVENILE, NO CUSTODY ☐

PRINCE WILLIAM COUNTY POLICE DEPARTMENT - PRINCE WILLIAM, VIRGINIA
NARRATIVE INFORMATION

CASE NUMBER: [redacted]	BEAT: A14	PAGE: OF 3

OFFENSE(S): UNATTENDED DEATH

VICTIM(S) NAME: [redacted]

DOMESTIC INCIDENT INFORMATION

INJURIES SUSTAINED BY VICTIM:

TREATING HOSPITAL/FACILITY:

TREATING PHYSICIAN:

AUTHORIZATION FOR RELEASE OF MEDICAL INFORMATION SIGNED? ☐ Yes ☐ No

MEDICAL CHART OBTAINED? ☐ Yes ☐ No

CALLS FOR SERVICE TAPE BEING REQUESTED? ☐ Yes ☐ No

PHOTOS TAKEN OF: ☐ VICTIM ☐ SUSPECT ☐ SCENE PHOTOGRAPHER:

WRITTEN STATEMENT OBTAINED FROM: ☐ VICTIM ☐ WITNESS(ES) ☐ NONE

DAMAGE CAUSED TO PROPERTY FROM THIS INCIDENT? ☐ Yes ☐ No

WAS EMERGENCY PROTECTIVE ORDER REQUESTED? ☐ Yes ☐ No

WAS DOMESTIC VIOLENCE PAMPHLET PROVIDED? ☐ Yes ☐ No

DESCRIBE:

REPORTING OFFICER	CODE	INVESTIGATING OFFICER/DETECTIVE	DATE
Detective Daniel P. Harris	0 5 2 3	D. P. Harris	07/10/2012

CID SUPERVISOR / DATE	PATROL SUPERVISOR / DATE	CASE DISPOSITION	BASIS FOR EXCEPTION
MAF		ACTIVE ☐	DEATH OF SUSPECT ☐
		INACTIVE ☒	PROSECUTION DECLINED ☐
		UNFOUNDED ☐	EXTRADITION DECLINED ☐
07/11/2012		ARREST A ☐ J ☐	REFUSED TO COOPERATE ☐
		EXCEPTION A ☐ J ☐	JUVENILE, NO CUSTODY ☐

FD 213/Revised 02/06/2011

OCT 16 2012

PRINCE WILLIAM COUNTY POLICE DEPARTMENT - PRINCE WILLIAM, VIRGINIA
NARRATIVE INFORMATION

CASE NUMBER: [redacted]	BEAT: A14	PAGE: 1 OF 1

OFFENSE(S): UNATTENDED DEATH

VICTIM(S) NAME: [redacted]

FINAL AUTOPSY REPORT FINDINGS

The final autopsy report prepared by Assistant Chief Medical Examiner Dr. Shane Chittenden reflects the cause and manner of death as follows:

CAUSE OF DEATH: Blunt force trauma to thorax.

MANNER: Accident

Dr. Chittenden noted the significant autopsy findings include blunt force trauma to the victim's thorax with resultant injuries to his left lung and to his spleen with resultant severe bleeding within his abdominal cavity. The toxicology analysis revealed the victim had ingested alcohol and marijuana prior to his death. It should be noted, seven (7) hours lapsed from the time of the collision until Mr. [redacted] was pronounced dead.

Based on the findings of this investigation and the conclusion documented in the final autopsy report, [redacted]'s death was by accidental means, thus I request this case be cleared exceptional.

CASE STATUS: Exception

REPORTING OFFICER	CODE	INVESTIGATING OFFICER/DETECTIVE	DATE
Detective Daniel P. Harris	0 5 2 3	D. P. Harris	10/09/2012

CID SUPERVISOR / DATE	PATROL SUPERVISOR / DATE	CASE DISPOSITION	BASIS FOR EXCEPTION
[illegible]		ACTIVE ☐	DEATH OF SUSPECT ☐
		INACTIVE ☐	PROSECUTION DECLINED ☐
		UNFOUNDED ☐	EXTRADITION DECLINED ☐
10-12-12		ARREST A ☐ J ☐	REFUSED TO COOPERATE ☐
		EXCEPTION A ☒ J ☐	JUVENILE, NO CUSTODY ☐

PD 213/Revised 02/06/2011

Photo 1 – View of the house, shed, fence, water container and utility vehicle involved in incident. Police scene recreation photo shows UTV colliding with fence and fence piece entering vehicle through windshield. The field was muddy at the time of the incident.

Photo 2 - Rear of UTV and the water pump pipe the vehicle drove over are shown.

Event:

Event#	Agency	Entry Date	Close Date	Beat	RD	Source
[redacted]	PD	07/04/2012 11:07:57	07/04/2012 15:21:37	A13	1414	9
Init Code	Final Code	Desc		Dispo	Priority	E911 Date
DOA	DOA	DOA-Unknown Cause		RP	2	
Location			Location Comment			Tow Area
[redacted]						[redacted]
Caller			Caller Location			Caller Phone
[redacted]			[redacted]			[redacted]

Comment(s):

Comment(s)
adult male/unc/not breathing
giving cpr instructions
cpr instructions being given

Case Number(s):

Case#	Agency	Unit	Case Date	Cancelled
[redacted]	PD	1250A	07/04/2012 11:08:17	NO

Disposition(s):

Disposition	Unit
RP	1100A

Assigned Unit(s):

Unit	Sequence
1250A	1
1100A	2
245A	3
245A	4
4510A	5
358A	6

Personnel Resolved By CAD:

Unit	Dept ID	Resolved Name
1100A	2348	[redacted]
1250A	2073	[redacted]
245A	1338	[redacted]
245A	1338	[redacted]
4510A	0358	[redacted]

Related Event(s):

Related Event	Related Agency	Relation Code
[redacted]	FD	COM

Event Milestones:

Status	Status Date	Unit
WAI	07/04/2012 11:07:57	
DSP	07/04/2012 11:08:17	1250A

ENR	07/04/2012 11:09:42	1250A
ONS	07/04/2012 11:27:00	1100A
CLS	07/04/2012 15:21:37	245A

Event Segments:

Segment	Segment Date	Unit	Comment
REC			
XREF	07/04/2012 11:07:57		#[redacted]
ENTRY	07/04/2012 11:07:57		
SUGGEST	07/04/2012 11:08:02		NOVA41 DEF
DSP	07/04/2012 11:08:17		1250A (PAT) [redacted]
PRIUNIT	07/04/2012 11:08:17		1250A
DSP	07/04/2012 11:08:17	1250A	
SUPP	07/04/2012 11:08:18		
SUPP	07/04/2012 11:08:25		
SSD	07/04/2012 11:09:22		245A
ENR	07/04/2012 11:09:42		1250A
ENR	07/04/2012 11:09:42	1250A	
DSP	07/04/2012 11:11:26	1100A	
ENR	07/04/2012 11:11:26	1100A	
DSP	07/04/2012 11:11:26		1100A
ENR	07/04/2012 11:11:26		1100A
DSP	07/04/2012 11:16:10		245A
ENR	07/04/2012 11:16:10		245A
DSP	07/04/2012 11:16:10	245A	
ENR	07/04/2012 11:16:10	245A	
AV	07/04/2012 11:26:23	245A	
CLEAR	07/04/2012 11:26:23	245A	
AUTPRE	07/04/2012 11:26:23		245A
HOLD	07/04/2012 11:26:23		Event held for unit: 245A
ONS	07/04/2012 11:27:00		1100A
ONS	07/04/2012 11:27:00	1100A	
PRIUNITX	07/04/2012 11:27:09		1250A
PRIUNIT	07/04/2012 11:27:09		1100A
ONS	07/04/2012 11:30:51		1250A
ONS	07/04/2012 11:30:51	1250A	
DSP	07/04/2012 11:32:19	245A	
ENR	07/04/2012 11:32:19	245A	
DSP	07/04/2012 11:32:19		245A
ENR	07/04/2012 11:32:19		245A
OK	07/04/2012 11:37:01		1100A, TIMER CLEARED
OK	07/04/2012 11:37:01		1250A, TIMER CLEARED
ONS	07/04/2012 11:39:20		245A
ONS	07/04/2012 11:39:20	245A	
ENR	07/04/2012 11:56:32	1100A	
ENR	07/04/2012 11:56:32		1100A[PW ER]
ONS	07/04/2012 12:15:55		1100A
ONS	07/04/2012 12:15:55	1100A	
ENR	07/04/2012 13:18:20	245A	
ENR	07/04/2012 13:18:20		245A[TICO LN]

ONS	07/04/2012 13:34:20		[redacted]
ONS	07/04/2012 13:34:20	245A	
DSP	07/04/2012 14:09:18	4510A	
DSP	07/04/2012 14:09:18		4510A (AIU) [redacted]
ENR	07/04/2012 14:10:24		4510A
ENR	07/04/2012 14:10:24	4510A	
AV	07/04/2012 14:36:38	1250A	
CLEAR	07/04/2012 14:36:38	1250A	
CLEAR	07/04/2012 14:36:38		1250A
ONS	07/04/2012 14:47:55		4510A
ONS	07/04/2012 14:47:55	4510A	
DSP	07/04/2012 14:48:49	356A	
ENR	07/04/2012 14:48:49	356A	
DSP	07/04/2012 14:48:49		356A [redacted]
ENR	07/04/2012 14:48:49		356A [redacted]
CLEAR	07/04/2012 15:13:06		1100A D/RP
AV	07/04/2012 15:13:06	1100A	
CLEAR	07/04/2012 15:13:06	1100A	
AV	07/04/2012 15:14:18	356A	
CLEAR	07/04/2012 15:14:18	356A	
CLEAR	07/04/2012 15:14:18		356A
CLEAR	07/04/2012 15:15:42		4510A
AV	07/04/2012 15:15:42	4510A	
CLEAR	07/04/2012 15:15:42	4510A	
AV	07/04/2012 15:21:37	245A	
CLEAR	07/04/2012 15:21:37	245A	
CLEAR	07/04/2012 15:21:37		245A
CLOSE	07/04/2012 15:21:37		

Exhibit 6
130326HCC1688

RESPONDENT LIST

1. Commonwealth of Virginia
   Office of the Chief Medical Examiner
   Northern Virginia District
   10850 Pyramid Place, Suite 121
   Manassas, VA 20110-2228

   Reports requested on March 27, 2013.

2. Prince William County Police Dept.
   One County Complex Court
   Prince William, VA 22192

   Reports request on March 27, 2013

3. [redacted]

   UTV owners did not respond to request for information on May1, 2013.

4. Detective Daniel Harris
   Prince William County Police Department
   One County Complex Court
   Prince William, VA 22192

   Telephone interview on May 8, 2013.

IDI #: 130326HCC1688
Exhibit #: 7

Utility Vehicle Data Record Sheet

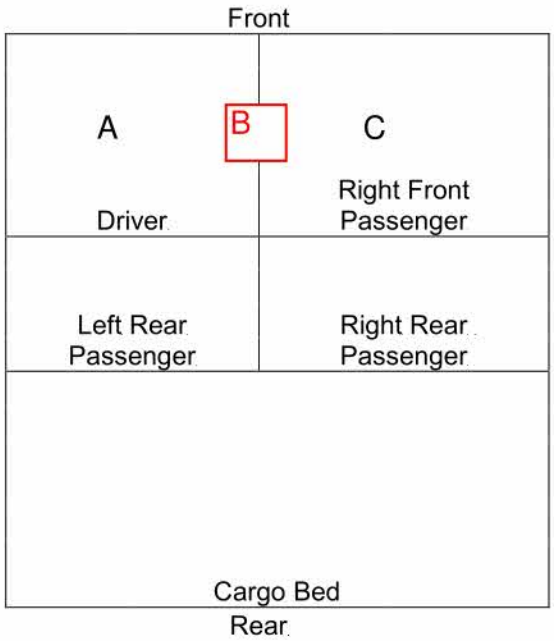

The Utility Vehicle

A:		
Age: 20	Height: 75 1/2"	
Gender: Male	Weight: 205 lbs.	
Helmet (Y/N): N	Seatbelt (Y/N): N	
Killed/Injured/Neither/Unknown: Killed		
Injury Description: Blunt Trauma Thorax		
Did vehicle land on victim: No		
Ejected (Either partially or fully): Ejected		

B:		
Age: Unk	Height: Not Avail	
Gender: Unk	Weight: Not Avail	
Helmet (Y/N): N	Seatbelt (Y/N): N	
Killed/Injured/Neither/Unknown: Neither		
Injury Description:		
Did vehicle land on victim: No		
Ejected (Either partially or fully): No		

C:		
Age: Unk	Height: Not Avail	
Gender: Unk	Weight: Not Avail	
Helmet (Y/N): N	Seatbelt (Y/N): N	
Killed/Injured/Neither/Unknown: Neither		
Injury Description:		
Did vehicle land on victim: No		
Ejected (Either partially or fully): No		

D:		
Age:	Height:	
Gender:	Weight:	
Helmet (Y/N):	Seatbelt (Y/N):	
Killed/Injured/Neither/Unknown:		
Injury Description:		
Did vehicle land on victim:		
Ejected (Either partially or fully):		

E:		
Age:	Height:	
Gender:	Weight:	
Helmet (Y/N):	Seatbelt (Y/N):	
Killed/Injured/Neither/Unknown:		
Injury Description:		
Did vehicle land on victim:		
Ejected (Either partially or fully):		

F:		
Age:	Height:	
Gender:	Weight:	
Helmet (Y/N):	Seatbelt (Y/N):	
Killed/Injured/Neither/Unknown:		
Injury Description:		
Did vehicle land on victim:		
Ejected (Either partially or fully):		

*If victim(s) were injured/killed, please include the other relevant information requested in the assignment message in the text of the IDI

Using the figure on the left, please fill in where the occupants were in the vehicle at the time of the incident using A, B, C, etc. to identify the occupant(s)' location. Fill in the occupants' characteristics in the corresponding location on the right. For example, the driver could be assigned to the letter 'A' and the letter 'A' would be placed in the diagram in the box designated 'Driver', and the drivers' characteristics would be filled on the right. If there were more than six occupants (or more room is needed), please add the other passenger(s)' information (or any other information) as needed. If information is not available, please indicate by 'na'.

Note: Not all locations indicated on the diagram exist in all types of utility vehicles. Please only use the locations that correspond to the incident vehicle. Please place an 'X' over the area if the vehicle was not equipped with the component.

CPSC FORM 324A

Save

Exhibit C – Highway Patrol Accident Reconstruction Report

Accident Reconstruction Report Case #[redacted] CAD #[redacted]
Page 14 of 31

Approximately 60' from the start of the tire mark from the rear right of Vehicle #1, I located a second tire mark from the front right tire. A short distance beyond that, I located a tire mark from the front left tire. The marks indicated Vehicle #1 was yawing.

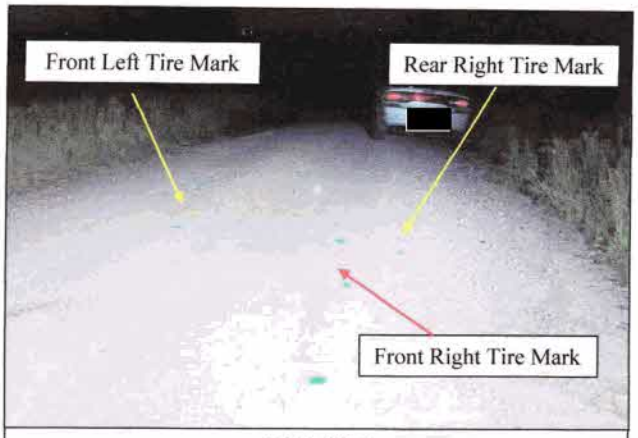

DSC_0007

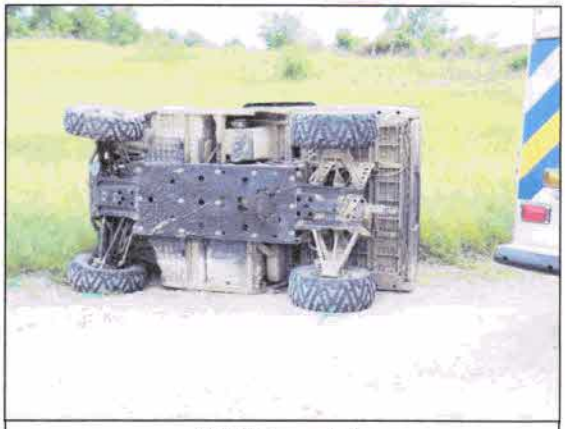

060312 recon 004

Vehicle #1 tripped and came to rest partially off the south side of the (mainly) traveled portion of the roadway, on its passenger's side.

Exhibit C – Highway Patrol Accident Reconstruction Report

Findings

DSC_0038

The first tire mark mapped from Vehicle #1 was from the rear right tire of Vehicle #1. If Vehicle #1 had been in a critical speed yaw, tire marks from the left side of Vehicle #1 would have been expected. If hard braking caused the tire mark, I would have expected tire marks from other tires. In addition, striations were located in Vehicle #1's tire marks indicating its wheels were rotating when the marks were created. A rocker switch on the dash of Vehicle #1 explained why only a tire mark from the rear right of Vehicle #1 first appeared. The three position switch allowed the operator to switch between four wheel drive, two wheel drive posi-track, and two wheel drive limited slip. Vehicle #1's rocker switch was toggled to two wheel drive limited slip. In this mode, a tire that had less weight on it would spin when accelerated. As Driver #1 turned right and accelerated, weight shift occurred and the right rear tire began to spin.

Driver #1 failed to ensure the minor passengers riding in Vehicle #1 were seat belted even though Vehicle #1 was equipped with enough lap belts for the driver and both passengers. One passenger in Vehicle #1 was totally ejected and the other passenger was partially ejected. Seat belts greatly reduce the odds of being ejected. Ejected occupant are at greater risk of being killed in motor vehicle crashes.

Prior to overturning, Vehicle #1 yawed for approximately 45'. As the vehicle rotated, the resistance to the sidewalls of the tires increased and Vehicle #1 slowed. Using a minimum speed formula with a drag factor (.40) adjusted for rotation and grade (generic rotation adjustment used of .7) I calculated the minimum speed lost by Vehicle #1.

$$S = \sqrt{30 \times d \times f}$$
$$S = \sqrt{30 \times 45 \times .24}$$
$$S = \sqrt{324}$$
$$S = 18mph$$

Exhibit C – Highway Patrol Accident Reconstruction Report

It is possible that Driver #1 could have increased his acceleration in the rotation and negated some of the speed loss. It would seem illogical that a safe driver traveling in a vehicle that was yawing towards the edge of the roadway would react in that way.

On Sunday, June 2, 2012, at approximately 1755 hours Driver #1 was driving Vehicle #1 southbound on [redacted] Driver #1 turned Vehicle #1 onto [redacted] and accelerated. Vehicle #1's weight was shifted towards the left side of the vehicle and the right rear tire began to spin, cleaning the loose gravel off the roadway. Vehicle #1 traveled in a serpentine pattern before it began to yaw. As Vehicle #1 traveled toward the south side of the roadway, it rotated counter clockwise. Once near the edge of the roadway, Vehicle #1 tripped and tipped over onto its passenger's side. Neither of the passengers had been seat belted. Passenger #2 was thrown clear of the vehicle while Passenger #1 was partially ejected and was struck on the head by Vehicle #1's cab cage.

Exhibit C – Highway Patrol Accident Reconstruction Report

Event Analysis

This crash occurred because Driver #1 accelerated Vehicle #1 on the gravel roadway causing him to lose control of Vehicle #1. As a result, Vehicle #1traveled off the roadway and overturned. Because Passengers #1 and #2 were not seat belted in the vehicle, Passenger #1 was partially ejected and Passenger #2 was totally ejected. Passenger #1 died as a result of injuries sustained in the crash.

My observations, findings, and calculations are based on information and evidence that was available at the time this report was prepared. New information and evidence could alter these observations, findings, and calculations.

Sgt. Paul J. Kempke #982, Q-FO
Major Crash Investigator, ACTAR #1825
Missouri State Highway Patrol, MCIU II

Exhibit C – Highway Patrol Accident Reconstruction Report

Accident Reconstruction Report Case #[redacted] CAD #[redacted]
Page 18 of 31

Photo Log

Date of Crash: June 2, 2012
Location of Crash: [redacted] 6 feet west of [redacted]
Driver #1: [redacted]
Original Investigating Officer: Tpr. T. Haley, #442, B-05
Photographers: Cpl. Christine McIntyre, #953, B-02
Sgt. P. J. Kempke, #982, Q-FOB

The following is a log of digital photos taken at the crash scene, crash site, and the tow yard. The images on CD-ROM are stored at Missouri State Highway Patrol, General Headquarters, Traffic Division, Accident Records, 1510 East Elm, P.O. Box 568, Jefferson City, Missouri.

Note: All digital image files are prefixed DSC_00… or 060312 recon 00…The image number in the photo log corresponds to the image file number (1=DSC_0001 or 060312 recon 001). If a photo is referred to in this report with a file number that contains an alpha character (DSC_0025a), it is a photo that has been cropped or enhanced for visualization. .

Digital Images

1. Unrelated tire marks
2. Unrelated tire marks
3. Right rear tire mark
4. Right rear tire mark
5. Right rear tire mark
6. Right rear tire mark
7. Tire marks from the front tires and right rear tire
8. Tire marks from the front tires and right rear tire
9. Tire marks from the front tires and right rear tire
10. Area where Vehicle #1 came to rest
11. Area where Vehicle #1 came to rest
12. Tire marks from the front tires and right rear tire
13. Tire marks from the front tires and right rear tire
14. Striations in the tire mark
15. Striations in the tire mark
16. Striations in the tire marks
17. Striated tire marks
18. Tire mark
19. Tire mark
20. Tire mark from the right rear tire
21. Tire mark from the right rear tire
22. Tire marks
23. Right side of Vehicle #1
24. Right side of Vehicle #1
25. Right front of Vehicle #1
26. Front of Vehicle #1
27. Front left of Vehicle #1
28. Left side of Vehicle #1
29. Rear left of Vehicle #1
30. Rear of Vehicle #1
31. Cab cage
32. Cab cage
33. Front right tire

Exhibit C – Highway Patrol Accident Reconstruction Report

34. Rear right tire
35. Right side of Vehicle #1
36. Seatbelt in Vehicle #1
37. Seatbelt in Vehicle #1
38. Speedometer and switches
39. Model plate
40. VIN number
41. VIN number
42. VIN number
43. Seatbelt in Vehicle #1
44. Parking brake
45. Speedometer and Odometer
46. Switches and Speedometer
47. Gear selector and dash area
48. Sticker on Vehicle #1
49. Tire mark
50. Unrelated tire marks
51. Rt. B
52. Rt. B
53. Tire marks and the area where Vehicle #1 came to rest
54. Striated tire marks

Digital Images

1. Undercarriage of Vehicle #1
2. Undercarriage and tire marks
3. Undercarriage and front of Vehicle #1
4. Undercarriage of Vehicle #1
5. Rear and top of Vehicle #1
6. Rear and top of Vehicle #1
7. Top of Vehicle #1
8. Passenger #1
9. Top of Vehicle #1
10. Front of Vehicle #1
11. Rt. B, facing north
12. Asphalt
13. Unrelated tire marks
14. Rear right tire mark
15. Rear right tire mark
16. Right rear tire mark
17. Right rear tire mark
18. Right rear tire mark
19. Tire marks from Vehicle #1
20. Tire marks from Vehicle #1
21. Tire marks from Vehicle #1
22. Tire marks from Vehicle #1
23. Tire marks from Vehicle #1
24. Tire marks from Vehicle #1
25. Area Vehicle #1 came to rest
26. Area Vehicle #1 came to rest
27. Area Passenger #1 came to rest

Exhibit C – Highway Patrol Accident Reconstruction Report

Accident Reconstruction Report Case # [redacted] CAD # [redacted]
Page 20 of 31

28. Area Vehicle #1 came to rest
29. Tire marks from Vehicle #1
30. Tire marks from Vehicle #1
31. Tire marks from Vehicle #1
32. Tire marks from Vehicle #1
33. Tire mark from Vehicle #1
34. Tire mark from Vehicle #1
35. Tire marks from Vehicle #1
36. Tire marks from Vehicle #1
37. Right side of Vehicle #1
38. Right side of Vehicle #1

Exhibit C – Highway Patrol Accident Reconstruction Report

Math Calculations

Grade, Segment 1

Equation

Grade

$$m = \frac{Rise}{Run}$$

Superelevation

$$e = \frac{Rise}{Run}$$

Variable Description

Variable / Const	Description	Unit
e	Superelevation	
m	Grade	
Rise	Vertical distance	feet
Run	Horizontal distance	feet

Input Values

Variable	Value	Unit
Grade Rise	.765	feet
Grade Run	40.721	feet
Superelevation Rise		feet
Superelevation Run		feet

Results

Variable	Value	Unit
m	0.0187	
e		

Calculation Steps

Grade

$$m = \frac{Rise}{Run}$$

$$m = \frac{0.765}{40.721}$$

$$m = 0.0187$$

Notes

Measured in the area of the right rear tire mark
Page 6, Paragraph 1

Exhibit C – Highway Patrol Accident Reconstruction Report

Grade, Segment 2

Equation

Grade

$$m = \frac{Rise}{Run}$$

Superelevation

$$e = \frac{Rise}{Run}$$

Variable Description

Variable / Const	Description	Unit
e	Superelevation	
m	Grade	
Rise	Vertical distance	feet
Run	Horizontal distance	feet

Input Values

Variable	Value	Unit
Grade Rise	2.474	feet
Grade Run	57.752	feet
Superelevation Rise		feet
Superelevation Run		feet

Results

Variable	Value	Unit
m	0.0428	
e		

Calculation Steps

Grade

$$m = \frac{Rise}{Run}$$

$$m = \frac{2.474}{57.752}$$

$$m = 0.0428$$

Notes

Measured in the area of the right rear tire mark
Page 6, Paragraph 1

Exhibit C – Highway Patrol Accident Reconstruction Report

Superelevation, Eastbound side

Equation

Grade

$$m = \frac{Rise}{Run}$$

Superelevation

$$e = \frac{Rise}{Run}$$

Variable Description

Variable / Const	Description	Unit
e	Superelevation	
m	Grade	
Rise	Vertical distance	feet
Run	Horizontal distance	feet

Input Values

Variable	Value	Unit
Grade Rise		feet
Grade Run		feet
Superelevation Rise	.348	feet
Superelevation Run	7.858	feet

Results

Variable	Value	Unit
m		
e	0.0442	

Calculation Steps

Superelevation

$$e = \frac{Rise}{Run}$$

$$e = \frac{0.348}{7.858}$$

$$e = 0.0442$$

Notes

Page x, Paragraph y

Exhibit C – Highway Patrol Accident Reconstruction Report

Coefficient of Friction Charts

Coefficients of Friction of Various Roadway Surfaces

DESCRIPTION OF ROAD SURFACE	DRY < 48 kph < 30 mph		DRY > 48 kph > 30 mph		WET < 48 kph < 30 mph		WET > 48 kph > 30 mph	
	From	To	From	To	From	To	From	To
PORTLAND CEMENT								
New, Sharp	0.80	1.20	0.70	1.00	0.50	0.80	0.40	0.75
Traveled	0.60	0.80	0.60	0.75	0.45	0.70	0.45	0.65
Traffic Polished	0.55	0.75	0.50	0.65	0.45	0.65	0.45	0.60
ASPHALT or TAR								
New, Sharp	0.80	1.20	0.65	1.00	0.50	0.80	0.45	0.75
Traveled	0.60	0.80	0.55	0.70	0.45	0.70	0.40	0.65
Traffic Polished	0.55	0.75	0.45	0.65	0.45	0.65	0.40	0.60
Excess Tar	0.50	0.60	0.35	0.60	0.30	0.60	0.25	0.55
GRAVEL								
Packed, Oiled	0.55	0.85	0.50	0.80	0.40	0.80	0.40	0.60
Loose	0.40	0.70	0.40	0.70	0.45	0.75	0.45	0.75
CINDERS								
Packed	0.50	0.70	0.50	0.70	0.65	0.75	0.65	0.75
ROCK								
Crushed	0.55	0.75	0.55	0.75	0.55	0.75	0.55	0.75
ICE								
Smooth	0.10	0.25	0.07	0.20	0.05	0.10	0.05	0.10
SNOW								
Packed	0.30	0.55	0.35	0.55	0.30	0.60	0.30	0.60
Loose	0.10	0.25	0.10	0.20	0.30	0.60	0.30	0.60
OPEN METAL GRID	0.70	0.90	0.55	0.75	0.25	0.45	0.20	0.35

Exhibit C – Highway Patrol Accident Reconstruction Report

INSTITUTE OF POLICE TECHNOLOGY AND MANAGEMENT
University of North Florida

SELECTED DRAG FACTORS

SURFACE	LOCKED WHEEL DRAG
CONCRETE:	
New	.70 to 1.00
Traveled	.60 to .75
Traffic Polished	.50 to .65
ASPHALT:	
New(or chip seal new)	.65 to 1.00
Traveled	.55 to .80
Traffic Polished	.55 to .75
Excess binder or sealer	.40 to .60
GRAVEL:	
Packed and/or sealed	.55 to .85
Loose	.40 to .70
Crushed rock	.55 to .75
ICE:	.05 to .25
SNOW:	
Packed on Road	.25 to .55 (colder usually higher)
Loose	.10 to .25
Penetration of snowbank	approximately .50
Penetration of avalanche	1.50 to 3.00

NOTE: On pavement or packed gravel, a free rolling tire on an automobile will have a deceleration factor of about .02 per tire. A rolling wheel on the powered axle will have a deceleration factor of about .03 in high gear per tire.

OTHER DRAG - DECELERATION FACTORS (approximate)

Large animals on pavement or ground:	.70
Steel on pavement or packed gravel:	.40
Aluminum on pavement or packed gravel:	.45 to .50
People on pavement sliding	.60 to .90
People tumbling on pavement or other surface	1.00
Street motorcycle, sliding with light scratching	.30 to .35
Motorcycle with crash bars	.20 to .40
Motorcycle with significant pavement scratching	.50 to .60
Motorcycle on soil (use lower value for harder soil, higher value for soft soil, may tumble)	.70 to 1.20
Rollovers (from last pavement mark to end) (higher values represent more real world)	.40 to .65
Deceleration in Critical speed yaw (typical .20)	.00 to .30
Wet grass	.40 to .60
Dry grass	.60 to .80
Furrowing	.90 to 1.50

Exhibit C – Highway Patrol Accident Reconstruction Report

Accident Reconstruction Report Case # [redacted] CAD # [redacted]
Page 27 of 31

[redacted]

Exhibit C – Highway Patrol Accident Reconstruction Report

Accident Reconstruction Report Case # [redacted] CAD # [redacted]
Page 28 of 31

Weather Data

History for Kirksville, MO

Sunday, June 3, 2012

Sunday, June 3, 2012

« Previous Day | June 3 2012 View | Next Day »

Daily | Weekly | Monthly | Custom

	Actual	Average	Record
Temperature			
Mean Temperature	67 °F	68 °F	
Max Temperature	85 °F	78 °F	95 °F (1934)
Min Temperature	48 °F	58 °F	42 °F (1957)
Degree Days			
Heating Degree Days	0	1	
Month to date heating degree days	8	3	
Since 1 June heating degree days	8	3	
Since 1 July heating degree days	4692	5843	
Cooling Degree Days	2	4	
Month to date cooling degree days	2	12	
Year to date cooling degree days	146	74	
Since 1 June cooling degree days	2	12	
Growing Degree Days	15 (Base 50)		
Moisture			
Dew Point	56 °F		
Average Humidity	69		
Maximum Humidity	100		
Minimum Humidity	37		
Precipitation			
Precipitation	0.00 in	0.18 in	3.18 in (1925)
Month to date precipitation	0.00	0.55	
Year to date precipitation	12.26	14.70	
Sea Level Pressure			
Sea Level Pressure	29.86 in		
Wind			
Wind Speed	5 mph (South)		
Max Wind Speed	12 mph		
Max Gust Speed	16 mph		
Visibility	10 miles		
Events			

T = Trace of Precipitation, **MM** = Missing Value

Source: [redacted]

Exhibit C – Highway Patrol Accident Reconstruction Report

Accident Reconstruction Report Case # [redacted] CAD # [redacted]
Page 29 of 31

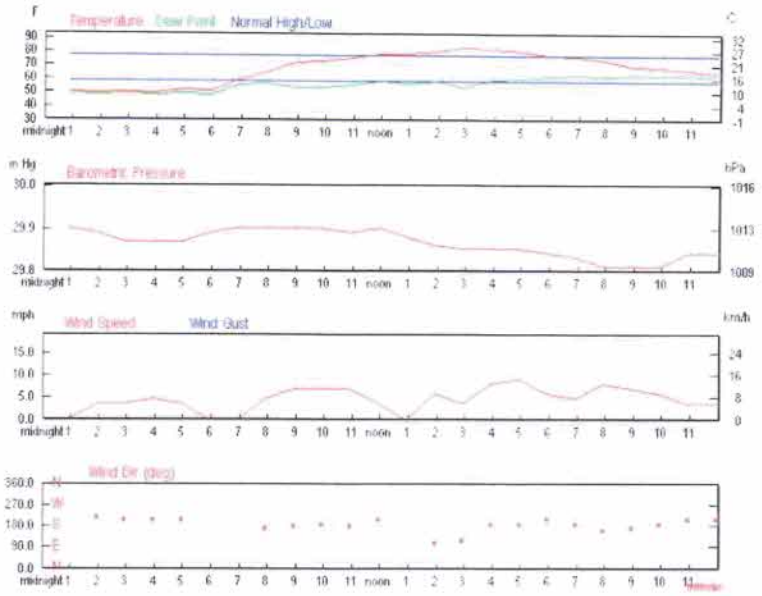

Certify This Report

Hourly Observations

Time (CDT)	Temp.	Heat Index	Dew Point	Humidity	Pressure	Visibility	Wind Dir	Wind Speed	Gust Speed	Precip
12:55 AM	50.0 °F	-	48.9 °F	96%	29.90 in	10.0 mi	Calm	Calm	-	N/A
1:55 AM	48.9 °F	-	48.0 °F	97%	29.89 in	10.0 mi	SW	3.5 mph	-	N/A
2:55 AM	50.0 °F	-	48.9 °F	96%	29.87 in	10.0 mi	SSW	3.5 mph	-	N/A
3:55 AM	48.9 °F	-	48.0 °F	97%	29.87 in	10.0 mi	SSW	4.6 mph	-	N/A
4:55 AM	52.0 °F	-	48.9 °F	89%	29.87 in	10.0 mi	SSW	3.5 mph	-	N/A
5:55 AM	51.1 °F	-	48.0 °F	89%	29.89 in	10.0 mi	Calm	Calm	-	N/A
6:55 AM	59.0 °F	-	55.0 °F	87%	29.90 in	10.0 mi	Calm	Calm	-	N/A
7:55 AM	64.9 °F	-	55.9 °F	73%	29.90 in	10.0 mi	South	4.6 mph	-	N/A
8:55 AM	72.0 °F	-	54.0 °F	53%	29.90 in	10.0 mi	South	6.9 mph	-	N/A
9:55 AM	73.0 °F	-	54.0 °F	51%	29.90 in	10.0 mi	South	6.9 mph	-	N/A

Show full METARS | METAR FAQ | Comma Delimited File

Exhibit C – Highway Patrol Accident Reconstruction Report

Accident Reconstruction Report Case # [redacted] CAD # [redacted]
Page 30 of 31

Time (CDT)	Temp.	Heat Index	Dew Point	Humidity	Pressure	Visibility	Wind Dir	Wind Speed	Gust Speed	Precip
10:55 AM	75.9 °F	-	55.0 °F	48%	29.89 in	10.0 mi	South	6.9 mph	-	N/A
11:55 AM	79.0 °F	-	57.9 °F	48%	29.90 in	10.0 mi	SSW	3.5 mph	-	N/A
12:55 PM	79.0 °F	-	55.9 °F	45%	29.88 in	10.0 mi	Calm	Calm	-	N/A
1:55 PM	80.1 °F	80.6 °F	57.9 °F	47%	29.86 in	10.0 mi	ESE	5.8 mph	-	N/A
2:55 PM	82.9 °F	81.9 °F	54.0 °F	37%	29.85 in	10.0 mi	ESE	3.5 mph	-	N/A
3:55 PM	82.0 °F	82.1 °F	59.0 °F	45%	29.85 in	10.0 mi	South	8.1 mph	-	N/A
4:55 PM	80.1 °F	80.9 °F	60.1 °F	50%	29.85 in	10.0 mi	South	9.2 mph	-	N/A
5:55 PM	78.1 °F	-	62.1 °F	58%	29.84 in	10.0 mi	SSW	5.8 mph	-	N/A
6:55 PM	77.0 °F	-	63.0 °F	62%	29.83 in	10.0 mi	South	4.6 mph	-	N/A
7:55 PM	73.9 °F	-	62.1 °F	66%	29.81 in	10.0 mi	SSE	8.1 mph	-	N/A
8:55 PM	69.1 °F	-	63.0 °F	81%	29.81 in	10.0 mi	South	6.9 mph	-	N/A
9:55 PM	68.0 °F	-	63.0 °F	84%	29.81 in	10.0 mi	South	5.8 mph	-	N/A
10:55 PM	66.9 °F	-	63.0 °F	87%	29.84 in	10.0 mi	SSW	3.5 mph	-	N/A
11:55 PM	64.9 °F	-	63.0 °F	93%	29.84 in	10.0 mi	SSW	3.5 mph	-	N/A

Show full METARS | METAR FAQ | Comma Delimited File

Exhibit C – Highway Patrol Accident Reconstruction Report

Accident Reconstruction Report Case #[redacted] CAD #[redacted]
Page 31 of 31

Forensic Map

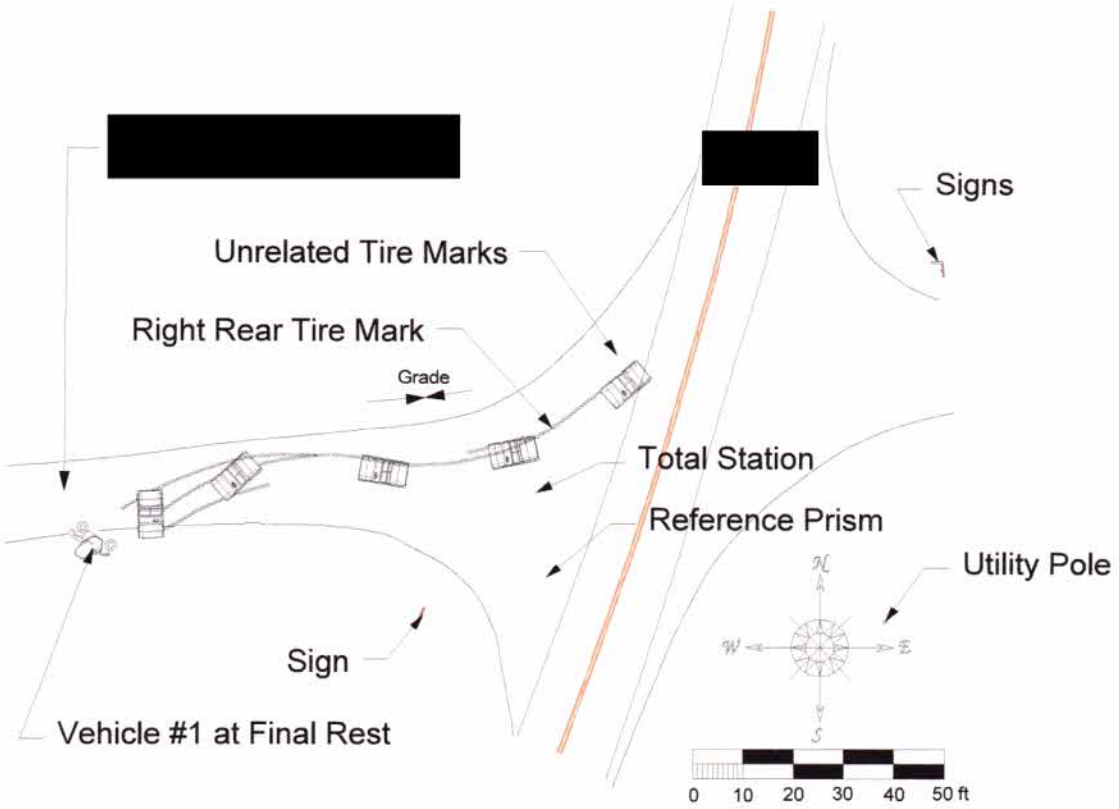

Exhibit D – Missing Document Report

U.S. Consumer Product Safety Commission

Task Number: 130128HCC2378

Date: 03/07/2013

Status of Missing Document(s)

The official records below were requested for this investigation report, but could not be obtained:

1. ADAIR COUNTY CORONER REPORT
2.
3.
4.
5.
6.

Exhibit D – Missing Document Report

U. S. CONSUMER PRODUCT SAFETY COMMISSION
UNITED STATES GOVERNMENT
WESTERN BRANCH
[redacted] • Valley Park, MO • 63088 • [redacted] • Fax [redacted] • [redacted]@cpsc.gov

February 20, 2013

Adair County Coroner's Office

Attn: Coroner Brain Noe

The U.S. Consumer Product Safety Commission is an agency of the **Federal Government** that investigates accidental deaths, accidental injuries and their causes. Information from our investigation helps make us aware of hazards to children and adults, and aids in preventing similar injuries from occurring to others.

This is a written request for a copy of your Coroner/Autopsy report covering the accidental All-Terrain Vehicle (ATV) death of, [redacted] **age 7.** The vehicle was being driven by a [redacted] **age 26.** The accident occurred near [redacted] in Adair County, MO, on or about 01/09/2013.

Copies of your Coroner/Autopsy report would be very helpful in my investigation of this incident.

As an agency of the **Federal Government**, the U. S. Consumer Product Safety Commission (CPSC) is responsible for investigating consumer product related injuries and deaths under Section 5, 16, and 29 of the Consumer Product Safety Act (Public Law 92-573; 15 U.S.C. 2054 and 3065). This agency is also charged with enforcing federal safety regulations covering generators, cribs, pools, ATV's, children's products, household appliances, power tools and other consumer products.

Please fax a copy of your report to me at [redacted] or email to [redacted]@cpsc.gov. Please call if you have any questions. I can be reached at my [redacted] at [redacted]

Thank you for your assistance in this matter.

Sincerely,

[redacted]

Federal Safety Investigator

Contact Information

Missouri Highway Patrol
Records: [redacted]
PO Box 568
Jefferson City, MO 6512
573-522-2591

Adair County Coroner
Brian Noe: Coroner
1008 N. Potter
Kirksville, MO 63501
660-665-1300

[redacted]
Owner of UTV
[redacted]
Greentop, MO 63546
[redacted]

IDI #: 130128HCC2378
Exhibit #: E

Utility Vehicle Data Record Sheet

Front

A Driver	B Right Front Passenger
Left Rear Passenger	Right Rear Passenger
Cargo Bed	

Rear

The Utility Vehicle

A:		
Age: 26	Height: Unk	
Gender: Male	Weight: Unk	
Helmet (Y/N): N	Seatbelt (Y/N): N	
Killed/Injured/Neither/Unknown: No		
Injury Description:		
Did vehicle land on victim:		
Ejected (Either partially or fully):		

B:		
Age: 7	Height: Unk	
Gender: Male	Weight: Unk	
Helmet (Y/N): N	Seatbelt (Y/N): N	
Killed/Injured/Neither/Unknown: Killed		
Injury Description:		
Did vehicle land on victim:		
Ejected (Either partially or fully):		

C:		
Age:	Height:	
Gender:	Weight:	
Helmet (Y/N):	Seatbelt (Y/N):	
Killed/Injured/Neither/Unknown:		
Injury Description:		
Did vehicle land on victim:		
Ejected (Either partially or fully):		

D:		
Age:	Height:	
Gender:	Weight:	
Helmet (Y/N):	Seatbelt (Y/N):	
Killed/Injured/Neither/Unknown:		
Injury Description:		
Did vehicle land on victim:		
Ejected (Either partially or fully):		

E:		
Age:	Height:	
Gender:	Weight:	
Helmet (Y/N):	Seatbelt (Y/N):	
Killed/Injured/Neither/Unknown:		
Injury Description:		
Did vehicle land on victim:		
Ejected (Either partially or fully):		

F:		
Age:	Height:	
Gender:	Weight:	
Helmet (Y/N):	Seatbelt (Y/N):	
Killed/Injured/Neither/Unknown:		
Injury Description:		
Did vehicle land on victim:		
Ejected (Either partially or fully):		

*If victim(s) were injured/killed, please include the other relevant information requested in the assignment message in the text of the IDI

Using the figure on the left, please fill in where the occupants were in the vehicle at the time of the incident using A, B, C, etc. to identify the occupant(s)' location. Fill in the occupants' characteristics in the corresponding location on the right. For example, the driver could be assigned to the letter 'A' and the letter 'A' would be placed in the diagram in the box designated 'Driver', and the drivers' characteristics would be filled on the right. If there were more than six occupants (or more room is needed), please add the other passenger(s)' information (or any other information) as needed. If information is not available, please indicate by 'na'.

Note: Not all locations indicated on the diagram exist in all types of utility vehicles. Please only use the locations that correspond to the incident vehicle. Please place an 'X' over the area if the vehicle was not equipped with the component.

CPSC FORM 324A

Save

EPIDEMIOLOGIC INVESTIGATION REPORT

1. Task Number	2. Investigator's ID	
130129HWE0009	3394	

3. Office Code	4. Date of Accident YR MO DAY	5. Date Initiated YR MO DAY
840	2012 05 26	2013 01 29

6. Synopsis of Accident or Complaint **UPC**

A 34 year-old man was killed when the UTV he was riding as a passenger in overturned and fell into a river. The UTV pinned the man beneath the water where he died before he could be removed from the water. An 18 year-old female was driving the vehicle at the time of the incident. A 24 year-old female was also riding as a passenger. The female passenger was injured in the incident, and there is no information whether the driver sustained any injury. Both women admitted to drinking alcohol prior to this incident. ...

7. Location (Home, School, etc)	8. City	9. State
5 - OTHER PUBLIC PROPERTY	WABASHA COUNTY	MN

10A. First Product	10B. Trade/Brand Name	10C. Model Number
5044 - UTILITY VEHICLES	POLARIS	RANGER

10D. Manufacturer Name and Address
POLARIS INDUSTRIES INC.
2100 HIGHWAY 55
MEDINA, MN 55340

11A. Second Product	11B. Trade/Brand Name	11C. Model Number
0	NONE	NONE

11D. Manufacturer Name and Address
NONE

12A. Hispanic or Latino	12B. Race	12C. Race Source
2 - No	1 - White Other:	3 - Official Document

13. Age of Victim	14. Sex	15. Disposition	16. Injury Diagnosis
34	1 - Male	8 - Death	69 - Submersion

17. Body Part(s) Involved	18. Respondent	19. Type of Investigation	20. Time Spent (Operational / Travel)
85 - ALL OF BODY	3 - 2nd Hand Info Only	2 - Telephone	12.00 / 0.00

21. Attachment(s)	22. Case Source	23. Sample Collection Number
9 - Multiple Attachments	05 - Newspaper	

24. Permission to Disclose Name (Non NEISS Cases Only)

○ Yes ◉ No ○ Yes for Manuf. Only ○ Verbal ○ Written

25. Review Date	26. Reviewed By	27. Regional Office Director
02/15/2013	8929	Frank J. Nava

28. Distribution	29. Source Document Number
John C. Topping; Tanya L. Topka	X1310778I

This investigation was initiated from a newspaper article published September 18, 2012 in the Rochester Post-Bulletin. Information for this report was obtained from the Minnesota Department of Natural Resources, and the Wabasha County Sheriff's Office. An autopsy report was requested from the Wabasha County Medical Examiner, but was not received at the time this report was written.

NARRATIVE

The individuals involved in this incident are an 18 year-old female (Victim 1), a 34 year-old male (Victim 2), and a 24 year-old female (Victim 3). The height, weight and races of the three individuals are unknown.

On May 26, 2012, one man and two women went riding on a four-wheeled UTV along a trail which ran parallel to the Zumbro River near Hammond, Minnesota. According to the incident report, the trail was muddy and slippery due to rain received earlier in the day. The trail was elevated above the river and a steep embankment led down to the riverside. While traveling along the trail, the driver lost control of the UTV, and rolled the vehicle down the embankment into the river. Statements made to authorities by Victim 1 and Victim 3 indicated that they had been drinking prior to this incident, and had limited recollections of the crash. Victim 3 stated the UTV had rolled over her chest, resulting in difficulty breathing. There was no indication that Victim 1 had suffered any injury. The body of Victim 2 was pinned under the UTV and was submerged beneath the water. The two women were unable to free Victim 2, and died at the scene from his injuries.

According to the incident report, all three of the victims were witnessed drinking in a bar a short time prior to this incident. An investigation by the Wabasha County Sheriff determined that Victim 1 was driving the UTV at the time of the incident. Victim 2 and Victim 3 were riding as passengers, and it is unknown if any helmets or seat belts were used.

SAMPLE COLLECTION

No samples were collected related to this incident.

PRODUCT IDENTIFICATION

Manufacturer:	Polaris Industries Medina, MN
Model:	Ranger
Model Year:	2008
VIN#:	[redacted]

EXHIBITS

Exhibit A	-	Photographs of incident product (14)
Exhibit B	-	Incident report
Exhibit C	-	Supplemental incident reports
Exhibit D	-	UTV Data Record Sheet
Exhibit E	-	Status of missing document form

Exhibit A
Date entered: Saturday, May 26, 2012
Comments: E:\DSCN0504.JPG
Dimensions: w 4,608 x h 3,456
File size: 3,637,335
Internal: bpp 6 dbid 11096 cat 0x8 type 0x6A

WCSO 12-1970

COPY

Exhibit A
Date entered: Saturday, May 26, 2012
Comments: E:\DSCN0526.JPG
Dimensions: w 4,608 x h 3,456
File size: 4,143,548
Internal: bpp 6 dbid 11119 cat 0x8 type 0x6A

COPY

Exhibit A
Date entered: Monday, June 4, 2012
Comments: G:\Records\2012\2012 Public Files\12001770\DSCN0503.JPG
Dimensions: w 4,608 x h 3,456
File size: 3,834,377
Internal: bpp 6 dbid 10924 cat 0x8 type 0x6A

COPY

Exhibit A
Date entered: Saturday, May 26, 2012
Comments: E:\DSCN0525.JPG
Dimensions: w 4,608 x h 3,456
File size: 4,141,211
Internal: bpp 6 dbid 11118 cat 0x8 type 0x6A

COPY

Exhibit A
Date entered: Saturday, May 26, 2012
Comments: E:\DSCN0532.JPG
Dimensions: w 4,608 x h 3,456
File size: 3,610,342
Internal: bpp 6 dbid 11125 cat 0x8 type 0x6A

COPY

Exhibit A
Date entered: Saturday, May 26, 2012
Comments: E:\DCIM\100OLYMP\P5260001.JPG
Dimensions: w 3,264 x h 2,448
File size: 3,764,426
Internal: bpp 6 dbid 10776 cat 0x8 type 0x6A

COPY

Exhibit A
Date entered: Saturday, May 26, 2012
Comments: E:\DSCN0512.JPG
Dimensions: w 4,608 x h 3,456
File size: 4,261,280
Internal: bpp 6 dbid 11105 cat 0x8 type 0x6A

COPY

Exhibit A

Date entered: Saturday, May 26, 2012
Comments: J:\DCIM\100CANON\IMG_2626.JPG
Dimensions: w 4,416 x h 3,312
File size: 2,475,041
Internal: bpp 6 dbid 10775 cat 0x8 type 0x6A

COPY

Exhibit A
Date entered: Saturday, May 26, 2012
Comments: J:\DCIM\100CANON\IMG_2621.JPG
Dimensions: w 4,416 x h 3,312
File size: 4,793,128
Internal: bpp 6 dbid 10770 cat 0x8 type 0x6A

COPY

Exhibit A
Date entered: Saturday, May 26, 2012
Comments: J:\DCIM\100CANON\IMG_2620.JPG
Dimensions: w 4,416 x h 3,312
File size: 5,757,694
Internal: bpp 6 dbid 10769 cat 0x8 type 0x6A

COPY

Exhibit A
Date entered: Saturday, May 26, 2012
Comments: J:\DCIM\100CANON\IMG_2622.JPG
Dimensions: w 4,416 x h 3,312
File size: 5,106,553
Internal: bpp 6 dbid 10771 cat 0x8 type 0x6A

COPY

Exhibit A
Date entered: Saturday, May 26, 2012
Comments: J:\DCIM\100CANON\IMG_2623.JPG
Dimensions: w 4,416 x h 3,312
File size: 4,875,422
Internal: bpp 6 dbid 10772 cat 0x8 type 0x6A

COPY

Exhibit A
Date entered: Saturday, May 26, 2012
Comments: J:\DCIM\100CANON\IMG_2624.JPG
Dimensions: w 4,416 x h 3,312
File size: 4,041,848
Internal: bpp 6 dbid 10773 cat 0x8 type 0x6A

COPY

Exhibit A
Date entered: Saturday, May 26, 2012
Comments: J:\DCIM\100CANON\IMG_2625.JPG
Dimensions: w 4,416 x h 3,312
File size: 5,047,172
Internal: bpp 6 dbid 10774 cat 0x8 type 0x6A

COPY

12A0006 (Dup.)

IDI # 130129HWE0009

Exhibit B

4

S – Snowmobile 6 – 6 wheel ATV
3 – 3 wheel ATV M – Off road motorcycle
4 – 4 wheel ATV V – Off road vehicle

Minnesota Recreational Vehicle Accident Report Form

Accident Type
F = Fatal
N = Personal Injury
P = Property Damage

F

Date	Time	County or County Number	Phone Number	Agency
05/26/2012	0105 AM	079	(651) 565 - 3361	WABASHA COUNTY

Name of Person or Investigating Officer Completing Report: DEPUTY TOM STURGIS, #510

Address of Person or Investigating Officer (No. & Street, RFD, Box No., City, Zip Code): [redacted]

Machine # 1

Operator's Name (First, Middle, Last)	Date of Birth MM/DD/YY	Age	Sex
[redacted]	[redacted]	18	F

Address (No. & Street, RFD, Box No., City, Zip Code): [redacted]

Did operator complete the Dept. of Natural Resources Safety Training? Yes/No: UNK

Owner's Full Name (First, Middle, Last)(If other than operator): [redacted]

Operator's Experience: D – 1 day W – week 1 – 1 year 5 – 5 years 10 – 10 years +: UNK

Owner's Address: [redacted]

Hours spent riding the day of the accident?: UNK

Make	Model	Engine Size	Year of Machine	Estimated Repair Cost	Ownership: O – owned R – rented B – borrowed F – family machine S – stolen
POLARIS	RANGER	CCs	2006	$ UNK	O

Registration No.	Exp. Date	State	Estimated Speed	Was operator familiar with the area?	Carbide Wear Rods Yes or No
[redacted]			UNK MPH	Yes No (circle one) UNK	—

Operator Alcohol Use Yes or No	PBT Used N – No P – Pass W – Warn F – Fail	Chem Test Yes or No	BAC	Any violation? Yes or No Explain	Track Studs Yes or No
UNK	N	UNK	UNK	PENDING	—

Any legal action? Yes or No Explain	If Yes: Number of studs in track
PENDING	—

VIN: [redacted]

Machine # 2

Operator's Name (First, Middle, Last)	Date of Birth MM/DD/YY	Age	Sex
	/ /		

Address (No. & Street, RFD, Box No., City, Zip Code):

Did operator complete the Dept. of Natural Resources Safety Training? Yes/No

Owner's Full Name (First, Middle, Last)(If other than operator):

Operator's Experience: D – 1 day W – week 1 – 1 year 5 – 5 years 10 – 10 years +

Owner's Address:

Hours spent riding the day of the accident?

Make	Model	Engine Size	Year of Machine	Estimated Repair Cost	Ownership: O – owned R – rented B – borrowed F – family machine S – stolen
		CCs		$	

Registration No.	Exp. Date	State	Estimated Speed	Was operator familiar with the area?	Carbide Wear Rods Yes or No
			MPH	Yes No (circle one)	

Operator Alcohol Use Yes or No	PBT Used N – No P – Pass W – Warn F – Fail	Chem Test Yes or No	BAC	Any violation? Yes or No Explain	Track Studs Yes or No

Any legal action? Yes or No Explain	If Yes: Number of studs in track

JUN 2012 Enforcement Training Office

Position
1 – Operator 2 – Passenger 3 – Pedestrian
4 – Other (Explain) _____

Casualty
F – Fatal
N – Injury

	Position	Injured Name (First Middle Last)	DOB	Age	Sex	Casualty
A	2	[redacted]	[redacted]		F	N
B	2				M	F
C						
D						

The operator or an officer investigating an accident resulting in injury requiring medical attention or hospitalization or death of a person or total damage of $500.00 or more to the machine ($300.00 for ORV) shall forward within 10 business days to:

MN DNR Enforcement
Safety Training
15011 Hwy. 115
Little Falls, MN 56345

10

Type of Terrain
1 – Lake or Stream
2 – Road Right-of-way
3 – Railroad Right-of-way
4 – Private Marked Trail
5 – Government Marked Trail
6 – Private Unmarked Property
7 – Within City or Village Limits
8 – Government Unmarked Property
9 – Outside City or Village Limits
10 – Other (Describe) PUBLIC / MINIMUM MAINTAINED TRAIL

Weather
1 – Clear
2 – Cloudy
3 – Rain or Sleet
4 – Fog
5 – Light snow
6 – Heavy snow
7 – Blowing snow

3

2

Type of Accident
1 – Struck fixed object (what) _____
2 – Machine Rollover
3 – Broke through ice
4 – Barbed wire or fence
5 – Operator injured in mechanism
6 – Collision with train
7 – Machine-car collision
8 – Equipment malfunction
9 – Struck guy wire or cable
10 – Machine-machine collision
11 – Operator thrown from machine
12 – Passenger thrown from machine
13 – Passenger thrown from device being towed
14 – Clothing caught in machine
15 – Other (describe) _____
16 – Excessive speed
17 – Loss of control
18 – Pedestrian

Injuries, person # 1 (Mark all that apply)

1 Soft tissue
2 Fracture
3 Lacerations
4 Other _____

* SEE BELOW

(Place number of injury type at location of injuries on figure)
Hospital _____
Admitted ☐ Transferred ☐ Ground ☐ Air ☐

Injuries, person # 2 (Mark all that apply)

1 Soft tissue
2 Fracture
3 Lacerations
4 Other _____

(Place number of injury type at location of injuries on figure)
Hospital _____
Admitted ☐ Transferred ☐ Ground ☐ Air ☐

Witness: Name	Address	Phone
		( )
		( )
		( )
		( )

Describe accident in detail, explaining cause, number of riders in group and the position the machines were in the group (Attach additional sheets as needed or you may attach a copy of your departmental report.)

SEE ATTACHED COPY OF DEPARTMENTAL REPORT.

— ON PASSENGER "A" AND DRIVER, UNABLE TO GET MEDICAL DOCUMENTATION DUE TO PRIVACY CONCERNS. —

Draw an example of machine(s) travel and collision. Mark machine(s) #1, #2, etc. Place an arrow in the box showing north.

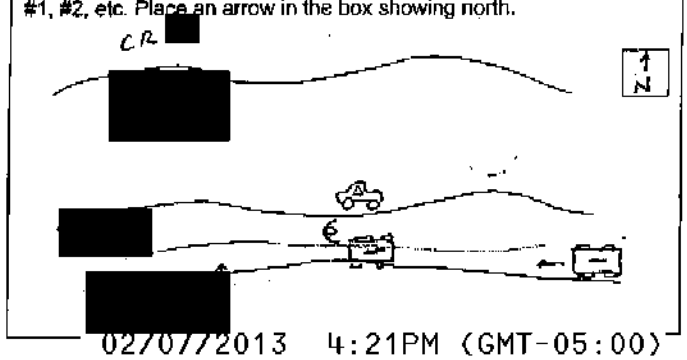

s this a supplement to a previous report? N

COPY

WABASHA COUNTY SHERIFF'S OFFICE

INCIDENT NARRATIVE | **ICR: 2012-001770**

Special Notes or Instructions:

CO ATTY FORMAL COMPL ___ CO ATTY REVIEW ___ CITY ATTY FORMAL COMPL ___ CITY ATTY REVIEW ___

OTHER:

Recordings:

Digital Photos _x_ Digital Video__ Audio Recording_x_ Squad Video__ CD__ DVD__

Specify __*Digital Photos of Deceased; Audio Statements from Witnesses and Victim*_____

SYNOPSIS:

- On 05/26/2012 at approximately 0105 hours, I, Deputy Sturgis, #510, of the Wabasha County Sheriff's Office was dispatched to an ATV traffic crash in Hammond.
- Dispatch advised that two female parties that were injured in the crash were currently at [redacted] in Hammond. Dispatch advised that a male party, also involved in the crash, was deceased, per the caller. It was unknown where the male was. It was believed he was in the river.
- Deputy Meurer and I responded to Hammond from Millville.
- As I was traveling westbound on County [redacted], just west of [redacted] a male on the side of the road flagged me down. He stated that the crash happened on the trails on the south side of the river. He pointed to an area across the river. I observed several ATV's with lights on and flashlights moving around.
- I advised Deputy Meurer to head towards [redacted], which leads back to the ATV trails.
- Deputy Meurer and I traveled back until the roadway turned to the trail. Deputy Meurer responded to the area in my squad. We traveled as far west onto the trail as the squad would allow.
- We were met by an adult male on an ATV. He was later identified as [redacted] DOB [redacted]. He stated that the crash site was approximately 1/8 mile west from our location. He gave us his ATV to travel back there.
- The trail conditions were narrow, muddy and slippery.
- On arrival to the crash site, we were briefed by another male, who stated the deceased was in the water, pinned underneath a Polaris Ranger. He was later identified as [redacted] There was another male standing in the water near the Ranger. He was later identified as [redacted]
- We advised dispatch as to our location and where to send first responders and fire personnel.
- From the trail, we were able to see the Ranger, lying on its passenger side. The ravine was at about a 70-degree incline and was about 30-35 feet until the shoreline.

WABASHA COUNTY SHERIFF'S OFFICE

INCIDENT NARRATIVE | **ICR: 2012-001770**

- Deputy Meurer and I made our way down to shoreline. Deputy Meurer confirmed there was one adult male pinned under the Ranger. Deputy Meurer checked for a pulse and confirmed the party was deceased.
- We advised dispatch of our findings and requested Zumbro Falls Fire Department to assist with the recovery of the body.
- The body, with the exception of a portion of his torso, was completely submerged under water. The male's party left arm was pinned underneath of the roll cage/head rest of the Ranger.
- We were advised that the deceased male's name was [redacted]
- Due to the possible water rescue/recovery, Deputy Meurer and I did not carry our digital media (cameras/audio recorder) with us. We did not take photos of the scene.
- Sommerfield, Deputy Meurer and I attempted to lift a portion of the Ranger to free [redacted]. We were unable to move the Ranger.
- [redacted] advised that his ATV had a winch in front.
- We hooked the winch to the frame of the Ranger and were able to lift it enough to free [redacted]
- We brough[redacted] onto the shoreline, out of the water. I observed that he had a large laceration above his right eye. The area also appeared to be swollen. I attempted to move his arms onto his torso and observed that rigor mortis had begun.
- Meurer, Sommerfield and I remained with the body until fire personnel arrived. We were able to place [redacted] on a backboard. With the assist of the winch, we were able to get the body onto the trail.
- Due to the timing, locations and level of difficulty, we advised dispatch that the Ranger would remain on scene, as is, until daylight. Dispatch was advised to notify day deputies of the removal of the Ranger.
- We loaded [redacted] onto the fire department's ATV.
- Meurer, fire department personnel, the bystanders, and I traveled to the [redacted] where the funeral home waited to take possession of the body.
- I was made aware of the two female passengers involved in the crash. They were [redacted] DOB [redacted] and [redacted], DOB [redacted]
- At the [redacted] I obtained two statements. At 0324 hours on 05/26/2012, I received a statement from [redacted] During his statement, he stated that:
  - [redacted]
  - Stated that [redacted] had wanted him to go riding on the trails and they had agreed to meet at [redacted] and [redacted] (in Hammond).
  - [redacted] and [redacted] had agreed to go on the trail ride.
  - They all had left from [redacted] and [redacted] home and went on the trail.

WABASHA COUNTY SHERIFF'S OFFICE

INCIDENT NARRATIVE | **ICR: 2012-001770**

- They were riding on the trail for an hour or so. At around 2230/2300 hour, they arrived in Millville. They stopped at the Lucky 7 bar.
- Between him and [redacted] there were two "shots" drank. (He and [redacted] each had two "shots".)
- He did not pay attention to the two females.
- He and [redacted] had eaten some free food provided by the Lucky 7.
- Around the 2330 hour, (he believes, his times could be off), they left the bar/and Millville.
- They met at the gravel road ([redacted] and he ([redacted]) left to go home.
- ([redacted] traveled the trail back home to Hammond, where he stopped at [redacted] and [redacted].
- [redacted] had noticed that [redacted] had not returned yet.
- After changing, ([redacted] stated that [redacted] friend; ([redacted]) said he noticed a Ranger in the water while on his way home to Millville.
- After hearing this, they got on their ATVs and headed back on the trails.
- [redacted] said that [redacted] arrived at his house with the two girls. The girls stated [redacted] was dead.
- [redacted] said [redacted] appeared to be normal that evening, and was having fun.

- *Above statement was paraphrased for this report. See audio file for complete statement.*
- At 0338 hours on 05/26/2012, I obtained a statement from [redacted] He stated that:
  - [redacted] did not know [redacted]
  - He was on his way home to Millville (on [redacted]) and saw headlights on the opposite side of the river. He stopped and yelled across the river. He did not get any answer.
  - He returned to Hammond and told [redacted] and they returned to the area on ATVs.
  - [redacted] got into the water.
  - He noticed [redacted] was on the passenger side of the vehicle with his right arm pinned under the headrest of the machine. He said his [redacted] head was completely under the water.
- *Above statement was paraphrased for this report. See audio file for complete statement.*
- After obtaining statements, I assisted in unloaded [redacted] onto the funeral home cot.
- Prior to them loading him, I photographed [redacted]
- [redacted] was turned over to funeral home staff.
- I cleared the scene.
- ----------
- On 05/26/2012, I was made aware by Deputy Schneider, #511, that prior to him making arrangements for the removal of the Ranger, family members had took it upon themselves to remove the Ranger from the water. He advised that there may be discrepancy in the driver and for this reason, he had the Ranger impounded. (See Dep. Schneider's report).

WABASHA COUNTY SHERIFF'S OFFICE

INCIDENT NARRATIVE | **ICR: 2012-001770**

- At approximately 1730 hours, I stopped at the Lucky 7 bar in Millville for a follow-up investigation. I arrived and was made aware that the owners were not there, the bartenders that worked the evening before were not there and were out celebrating a birthday. I was advised I could find [redacted] at her residence.
- I arrived at [redacted]. I was advised by [redacted] that she was not at the bar when any of the victims where there. She advised me of the information she had received second hand. She stated that her sister-in-law had bartended at the Lucky 7 the evening prior and was available for a statement. [redacted] said there are cameras in the bar, but due to construction, she does not believe they were operating.
- I met with [redacted] DOB [redacted] I advised why I was there and asked if she would provide a statement. She agreed. At 1755 hours, [redacted] stated that:
  - She confirmed she was bartending the evening prior.
  - She did not know who the victims were.
  - [redacted] was unsure what time they arrived at the bar. She remembered one male placing his helmet on the bar.
  - She was cleaning up and had just placed free food on the bar and the two men ([redacted]) had asked to eat it, in which they did.
  - The two girls ([redacted] were in and out of the bar, multiple times.
  - She thinks they all may have left around 2200 hours. They were not there very long. She thinks they left prior to 2200 hours, because she had left around the time.
  - [redacted] said the group was soaking wet.
  - She said the bigger person [redacted] had ordered a diet [redacted].
  - She said the female (later described as [redacted] ordered a couple of shots.
  - Said [redacted] and [redacted] sp?)were also bartending and was unsure if they served the group.
  - Believes [redacted] had given [redacted] one of the shots purchased.
  - She was doing dishes and was in and out of the bar area.
- *Above statement was paraphrased for this report. See audio file for complete statement.*
- I spoke with [redacted] and [redacted] briefly. [redacted] stated that they had four bartenders working Friday evening. In addition to [redacted] here was [redacted] girlfriend) [redacted] (sp?), and [redacted] They stated that the bartenders would be unavailable for statements this evening due to being out of town. I was made aware that [redacted] still remained in the hospital.
- I cleared the follow up.
- Multiple phone calls were made to [redacted] and [redacted] Neither party answered. Voice messages were left.

WABASHA COUNTY SHERIFF'S OFFICE

INCIDENT NARRATIVE | **ICR: 2012-001770**

- [redacted]
- [redacted]

- I stopped at the last known address [redacted] to speak with [redacted] No one was home.
- I cleared the follow-ups.
- ----------
- On 05/27/2012, at 1545 hours, I was made aware by Deputy Joe Schneider that [redacted] had gone to St. Mary's Hospital in Rochester for a medical issue. There, she had made a statement to a Rochester Police Officer admitting to being the driver of the Ranger when it crashed.
- I spoke with [redacted] by phone and we agreed to meet at her residence at [redacted], around the 1600 hour.
- At 1615 hours, I met with [redacted] I read and recorded the Miranda Warning to her. She understood the warning and agreed to speak with me. I advised that she could exercise her rights at anytime. She understood. During the statement, [redacted]
  - Stated that she knew [redacted] for about 15 years and was considered a best friend.
  - She has known [redacted] for about five years.
  - [redacted] had texted her asking to go on a Ranger ride on Friday evening. They met at [redacted] and [redacted] around the 1900 hour.
  - [redacted] was made aware and wanted to go on a ride. [redacted] really liked [redacted]
  - They had gotten [redacted] to go on the trail ride with them. [redacted] went to get his own ATV.
  - It was [redacted] and her on the Ranger. They left from Hammond and traveled on the trail and agreed to go to Millville.
  - They went to the Lucky 7 to have a drink.
  - On the return, they came around the corner, they flipped, the ATV landed on her chest, and she woke up to [redacted] yelling at her to wake up.
  - They located [redacted] and tried to get him up and couldn't.
  - They left Hammond around 2000 – 2030 hour. They were on the trail for an hour to an hour-and-a-half. They were driving slowly. They left the Lucky 7 around the 2200 hour.
  - It was raining heavily on the trip to Millville. It was not raining when they left the Lucky 7. She was unsure if it was raining on the return trip to Hammond.
  - [redacted] said she was the passenger (far right) on both trips.
  - She stated the trail was wet and she hasn't been on the trail for about two years. She recalls the trail being rough, especially after the floods.

WABASHA COUNTY SHERIFF'S OFFICE

INCIDENT NARRATIVE | **ICR: 2012-001770**

- [redacted] and her all left at the same time. She believes [redacted] took the pavement home; [redacted]
- She remembers [redacted] telling them to hang-on. She did not have her seatbelt on.
- When the Ranger tipped, she remembers hearing a "crunch" from the ATV landing on her chest. She recalls waking up to [redacted] screaming at her. She had landed on the hillside, hanging onto a tree. She did not land in the water.
- After she was woken by [redacted], she went down by [redacted] in the water and tried to get him up but couldn't.
- They walked back towards Hammond and got lost. They were picked up by [redacted] and [redacted]
- [redacted] had three or four shots at the Lucky 7. He does not drink beer. She had three beers prior to leaving Hammond. She too had shots at the Lucky 7. She had bought some shots, [redacted] had bought some shots.
- She thinks [redacted] had four shots at the bar and believes he had some of what [redacted] was drinking. She thinks it was vodka.
- When asked if [redacted] had any shots at the Lucky 7, [redacted] stated yes and that [redacted] had bought her a couple. She said her and [redacted] were seated at the bar. They would go in and out of the bar periodically to smoke.
- Stated that [redacted] had a bottle of vodka in her bag. Said [redacted] is 18 years old.
- [redacted] old [redacted] that she did not sleep at all Thursday (the 24th). Stated that she ([redacted]) had gone to the Woodshed (bar) in Wisconsin where she used multiple drugs and drank about a half bottle of vodka. [redacted] had told her she used "shrooms" on Thursday afternoon. She said [redacted] started to drink as they got on the trail in Hammond. She thought she might have had two or three mixed drinks on the way. She stated she had drinks at the Lucky 7 and on the return trip back to Hammond; [redacted] had put the bottle of vodka back into her bag.
- On the return trip, [redacted] recalls [redacted] was driving, [redacted] was in the middle, and [redacted] was on the far right. When told that [redacted] admitted to being the driver, she still believed that [redacted] was driving. She mentioned that she had hit her head pretty hard prior to rolling, because of the Ranger hitting a rock, (striking her head on the roll bar). She stated that she was told that her BAC at the hospital was ".1something". She admitted to being drunk.
- She does not remember who was driving but recalls [redacted]
- [redacted] stated that [redacted] had visited her in the hospital. [redacted] had made the comment to

WABASHA COUNTY SHERIFF'S OFFICE

INCIDENT NARRATIVE | **ICR: 2012-001770**

[redacted] "I have a 10-month-old son and I can't deal with this," and that she didn't mean for any of this to happen.

- *Above statement was paraphrased for this report. See audio file for complete statement.*
- I advised [redacted] to contact me if she has any questions or if she recalls any other details. She agreed.
- I cleared the follow-up.
- I spoke with Deputy Bade by phone and he advised me of his conversation with the Rochester Police Department. He passed along to me the contact information.
- I called Officer Doug Remling, #2160, of the Rochester Police Department, (507-259-7013). He stated that he met with [redacted] at St. Mary's Hospital. He had obtained a non-custodial recorded statement from [redacted] saying that she was the driver of the Ranger, and that she had consumed alcohol prior to the crash. Officer Remling stated that he has a report filed under ICR #12-026918. He stated that the digital file is downloaded on the department's server and is available. Lastly, Remling stated that he believes [redacted] is currently at St. Mary's.
- I cleared the phone call with Officer Remling.
- I called St. Mary's Hospital. They confirmed that [redacted] was at hospital. Due to data privacy issues, the nurse was unable to give me any information pertaining to [redacted] She did state however that they (hospital) was currently looking for a place for [redacted]
- I cleared the follow-up investigation.

End of Report

Deputy Name & Badge Number

STURGIS/510

COPY

WABASHA COUNTY SHERIFF'S OFFICE

SUPPLEMENTAL REPORT

ICR: 12-1770b

Special Notes or Instructions:

CO ATTY FORMAL COMPL ___ CO ATTY REVIEW ___ CITY ATTY FORMAL COMPL ___ CITY ATTY REVIEW ___

OTHER:

Recordings:

- Digital Photos __ Digital Video__ Audio Recording__ Squad Video__ CD__ DVD__
  Specify _____

Date of This Report: 5/28/12

SYNOPSIS:

On 5/26/12 at 0104 I, Deputy John Coons #506, was called to a four wheeler accident in Hammond. Dispatch relayed that two girls had walked to a residence in Hammond at [redacted] and reported to the residents they had been in a crash somewhere in the river, and that their friend was still trapped in the machine in the water.

I responded from Zumbro Falls. Deputies Sturgis and Meurer responded from Millville. I heard them report they had been flagged down in Jarrett and told the four wheeler was in the water on the opposite side of the river. They returned to Millville and followed a township road on the south side of the river in an attempt to locate the accident scene.

When I arrived at the residence I spoke with [redacted] in the garage of the home. She was seated in a folding chair and was covered with a blanket. She was soaking wet and covered with mud. She was complaining of chest pains. I could smell the odor of an alcoholic beverage coming from her person. [redacted] told me she had been a passenger in a side by side atv that was being driven by [redacted] was also a passenger in the vehicle. [redacted] said she remembered they were going down the trail along the river and then she remembered it tipping, and then she blacked out. She woke up in the water and could hear [redacted] screaming. They were unable to get [redacted] out of the water. They didn't have any cell phone signal, and walked back along the trail to Hammond to this house. She could not pinpoint where in the river the atv was. [redacted] said it hurt when she would breath, and she was crying and very upset.

I spoke with [redacted] who told me she had been a passenger in an ATV driven by [redacted] and it had gone into the river. [redacted] told me she had tried to get [redacted] head above water, but he was too big and she couldn't get his head up. He gurgled as she was trying to do this. She and [redacted] tried to get

SUPPLEMENTAL REPORT | **ICR: 12-1770b**

him out of the water but could not, so they left and went for help in Hammond since their cell phones wouldn't work. [redacted] thought the crash had happened toward Hammond after the creek crossing. She said it was down the bank in the river. I relayed this information to Deputies Sturgis and Meurer who were on the river trying to locate the atv. I could smell the odor of an alcoholic beverage coming from her person. Zumbro Falls Fire Department First Responders arrived and took over patient care of [redacted] and eventually [redacted] Elgin Ambulance arrived and took over patient care of the pair and transported them to St. Mary's in Rochester. I requested ZF Fire bring their rescue ATV to Hammond to assist with locating the crash. Eventually Sturgis and Meurer were able to locate the ATV and informed me by radio that [redacted] was deceased. They told me they would need the fire department to come to the scene with some equipment to get [redacted] out of the water.

Because there was no cell phone service I requested dispatch notify Dr. Pesch of the death and the circumstances and ask him if he would be ordering an autopsy. Dispatch informed me that Dr. Pesch did order an autopsy and I requested dispatch call a funeral home out of Plainview to transport [redacted] to Rochester.

[redacted] parents, [redacted] and [redacted] arrived on scene. I explained to them what was happening and that their son had died. I offered to contact clergy for them and they asked that we contact their priest from Lake City. I offered to arrange for notification of other relatives for them, and they asked that I arrange to notify their son [redacted] who lives in Rochester. I had dispatch request RPD do a death notification. They were able to tell me that [redacted] is a diabetic but has no other medical problems.

Deputies Sturgis and Meurer informed me they were able to get [redacted] out of the river with ZF Fire, and that it would be much easier to bring him out to the Millville end of the trail. They told me they wanted to wait until daybreak to get the atv out of the river for safety reasons. I waited until [redacted] Funeral Home staff arrived in Hammond, and then I let them to the Millville ball field where we would meet the other officers. [redacted] went home to wait for their son [redacted] and their priest to arrive.

While at the ball field Deputies Sturgis and Meurer arrived and we briefed each other on our activities. Deputy Sturgis will be handling the ATV crash and I will be doing the medical examiner paperwork. I went up the hill to call Dr. Pesch with the details, and [redacted] was transferred to [redacted] staff.

I went to the [redacted] farm and spoke with [redacted] and updated them.

I cleared the farm and the call at 0425. The case file will be forwarded to Dr. Pesch on Tuesday.

End of Report

Deputy Name & Badge Number

John Coons #506

COPY

Revised 18June09

EVENT REPORT

ICR #: 12-026918

☒ Rochester Police Department
☐ Olmsted County Sheriff's Office

All Photos and Audio/Video recordings are to be noted in the body of report

Reviewed by: 2180

Event Psych/Crim Veh Homicide Suspect | Cross Reference # | Juvenile Involved ☐ Yes ☒ No

Date and Time of Event: Date 05-27-12 Time 1211 TO Date Time | Date and Time Reporting Officer Assigned: Date 05-27-12 Time 1216

Event Location: [redacted] | Forced Entry? ☐ Yes ☒ No

Victim Name: First Middle Last | ☐ VIS ☐ Adult ☐ Juvenile | DOB

DL No. AKA | ☐ Male ☐ Female ☐ White ☐ Black ☐ Asian ☐

Residence Email Phone

Business Phone

Complainant Name: First Wendy Middle Last Chesney | DOB | ☒ Adult ☐ Juvenile

DL No. AKA | ☐ Male ☒ Female ☒ White ☐ Black ☐ Asian ☐

Residence Email Phone

Business Phone

Witness Name: First Middle Last | DOB | ☐ Adult ☐ Juvenile

DL No. AKA | ☐ Male ☐ Female ☐ White ☐ Black ☐ Asian ☐

Residence Email Phone

Business Phone

Code*	Property of Value	Value
	Total:	

* Indicate one or more: L = Lost; S = Stolen; R = Recovered; D = Damaged

Suspect Name: First [redacted] Middle Last | DOB [redacted] | ☒ Adult ☐ Juvenile

DL No. [redacted] AKA | ☐ Male ☒ Female ☒ White ☐ Black ☐ Asian ☐

Residence Email Phone

[redacted]

Business Phone

Description: Height 5'5 Weight 120 Hair BRN Eyes HZL Glasses Type Facial Hair Type Weapon Type

Clothing Description: Tank top, white shorts, sandals | ☐ Alcohol ☐ Drugs

School Where Held? St Mary's Hospital Ticket # N/A

Vehicle License Plate: N/A ☐ Suspect ☐ Victim ☐ Impound State: Make: Year: Model: Color:

Initial Investigating Officer(s): D. Remling, #2160 ☐ Patrol Follow-up: ☒ Patrol Sign-off

Inv Unit Assigned: Follow-up Investigator(s):

☒ Open/Inactive ☐ Closed/Arrest ☐ Closed/Exceptional ☐ Closed/Unfounded ☐ Non-Criminal

Copy to: ☐ County Attorney ☐ City Attorney ☒ Other: 5/27/12 CIT ☐ Victim Notification Sent

ORIGINAL

Supplemental Report	All Photos and Audio/Video recordings are to be noted in the body of report	ICR #	12 - 026918
Officer: D. Remling, #2160			

On 05-27-12 I was sent to [redacted] where the complainant stated her sister was upset over an accident and was now having thoughts of suicide. On my arrival I spoke with the victim who stated to me that over the weekend she had been involved in an accident where one person died. She stated she had been drinking and that she was the driver of a Ranger ATV which left the roadway pinning a male passenger under water where he died. She was transported to St Mary's for psychological evaluation and Wabasha SO was contacted and stated they would send someone to interview the suspect.

Officer Observations/Actions

- I arrived at the scene and met the complainant and her mother in the driveway.
- They advised me that there had been an ATV accident where one party had died and now [redacted] is upset and has been making comments about suicide.
- The suspect came out of the house before I could ask more questions.
- [redacted] old me that since the accident she cannot stop thinking about the incident and now wants to kill herself.
- She stated she had been a patient at St Mary's but never spoke with any officers about the incident.
- When she was released she came here to her boyfriend's.
- [redacted] then made a comment about being the driver of the ATV and that she had been drinking alcohol that night.
- She was transported to St Mary's by Gold Cross and I requested dispatch check into the incident.
- I was advised that it had been handled by Wabasha Sheriff's Dept and that they had been looking for [redacted]
- I spoke with Deputy Joe Schneider who advised they would be sending someone to St Mary's to interview the suspect.
- [redacted] as left at St Mary's with a hold for psychological evaluation.
- I did record a brief statement by [redacted] and attached it to the case file as evidence.
- Deputy Tom Sturgis #510 was advised of my findings and provided the incident number.

Suspect Statement

[redacted] told me that:

- She is going to jail over what happened.
- She went down the trail with [redacted] and [redacted]
- [redacted]s real name is [redacted]
- They got to Millville and they all had some shots.
- She had a vodka with her and they drank pretty much all of that before they even got to the bar.
- On the way back [redacted] let her drive.
- She remembers asking them if she was driving ok.
- She doesn't remember crashing at all.
- She woke up and she was hanging in her seatbelt.
- She heard [redacted] rowning and tried to help him.
- She thought [redacted] was pinned underneath him and so she thought she was the only one who survived.
- Then she heard [redacted] yelling her name.
- She went and found her and then they returned to [redacted] but he was already dead and they couldn't do anything about it.
- Then she went back and told everyone that she wasn't driving.
- Her whole family is going to turn against her.
- Her boyfriend is [redacted]

ORIGINAL

Supplemental Report	ICR #:	12 – 026918
Officer: D. Remling, #2160		

Disposition

- No further investigation by this officer.
- The suspect's statement was attached to the case file as evidence.

ORIGINAL

COPY

WABASHA COUNTY SHERIFF'S OFFICE

SUPPLEMENTAL REPORT

ICR: 12-001770

Special Notes or Instructions:

CO ATTY FORMAL COMPL ___ CO ATTY REVIEW ___ CITY ATTY FORMAL COMPL ___ CITY ATTY REVIEW ___

OTHER:

Recordings:

- Digital Photos __ Digital Video__ Audio Recording__ Squad Video__ CD__ DVD__
  Specify _____

Date of This Report:

SYNOPSIS:

On 05/26/12 at approximately 0818hrs Deputy Jason Bade and I arrived at this crash scene to assess the recovery of the Polaris ATV from the river. We arrived to find individuals working on getting the ATV out including [redacted] brother [redacted] I walked to the point on the opposite side of the river of the crew and yelled across asking them if there was anything they could think of that we could get to help and they said no, they thought they had it. After monitoring this for awhile, [redacted] crossed the river over to my location to get to the road to drive to get a couple more supplies. It appeared that the water was chest high and the [redacted] was struggling to get across in the current. I contacted the Zumbro Falls Fire Department and advised them of the situation and they stated that if I believed that they were needed to prevent any further harm to any persons then they needed to be paged out.

[redacted] left to get the supplies and while he was gone I decided to have the fire department paged out. When [redacted] arrived back I advised him that he was not going to be allowed to go back across the river until Zumbro Falls arrived on scene. [redacted] advised his help of this and sat down near us. [redacted] started to speak about what he found at the scene when he first arrived this morning. [redacted] stated that his wife did take photos before they started that removal. [redacted] then went on to say that it just did not make sense that [redacted] would have been driving the ATV when it crashed and listed the following reasons he felt that way:

- **He found the steering wheel tilted down and explained that his brother was a large man and had to tilt the wheel all the way up when he drove it so that he could fit in it.**
- **[redacted] had driven these trails multiple times in the past.**
- **[redacted] was found under the passenger side of the ATV and he found it hard to believe that he would**

WABASHA COUNTY SHERIFF'S OFFICE

SUPPLEMENTAL REPORT | **ICR: 12-001770**

have been pinned under that side if he would have had to slide past two passengers to get to that point.

- [redacted] rarely if at all drinks.

[redacted] went on to say that if one of the two girls were driving, he would have to say it was [redacted] simply because [redacted] had let her drive the ATV in the past and [redacted] had a thing for her. [redacted] said that he wasn't necessarily telling me this because he wanted something to happen to who was driving he just wanted to know what really happened and he repeated that he just doesn't believe it was [redacted] that drove.

I advised [redacted] that because there is question about who may have been driving the ATV and the little information that Bade and I had about the case, I would need to impound the ATV at this time as evidence. [redacted] understood and wished to be contacted when it was available for release.

At this time another ATV and a small tractor had arrived to assist with the recovery and a short time later the Polaris ATV was pulled out. Zumbro Falls Fire had arrived and was advised that the recovery was now done.

The ATV was taken to Becklund's in Millville where I took photos of the ATV and wrote down the serial number. I did not notice a DNR plate on the ATV and asked [redacted] if it was registered and [redacted] was sure it was. [redacted] said that he had the insurance card and possibly the ATV registration card back at his parent's farm.

I followed [redacted] to his parent's farm where he located that insurance card on the ATV (State Farm policy # [redacted]). [redacted] at that time was unable to locate the registration card but later called back and gave me the registration number off of it which was [redacted]. The serial number on the ATV is [redacted] stated that at a later time I would be able to obtain the photographs from his wife's camera.

End of Report

Joe Schneider / 511

COPY

WABASHA COUNTY SHERIFF'S OFFICE

SUPPLEMENTAL REPORT

ICR: 2012-001770

Special Notes or Instructions:

CO ATTY FORMAL COMPL ___ CO ATTY REVIEW ___ CITY ATTY FORMAL COMPL ___ CITY ATTY REVIEW ___

OTHER:

Recordings:

- Digital Photos __ Digital Video__ Audio Recording__ Squad Video__ CD__ DVD__
  Specify _____

Date of This Report: 08/07/2012

SYNOPSIS:

- On 08/06/2012 at 1148 hours, I, Deputy Sturgis, #510, of the Wabasha County Sheriff's Office performed a follow-up phone interview with [redacted] DOB [redacted] [redacted] was listed as a working bartender the evening 05/25/2012.
- I advised her as to the reason of the call. She understood. During the interview, [redacted] stated:
  - She recalls working the evening of 05/25/2012.
  - [redacted] stated that was her first shift as a bartender. She stated that evening was hectic and she was nervous.
  - When asked if she knew [redacted] prior to that evening, [redacted] stated she did not. Since then, she has learned who they are.
  - She stated that she didn't think they were too drunk, but could tell they had been drinking.
  - [redacted] recalls [redacted] sitting at the bar and remembered him ordering a diet [redacted] had sat at the bar eating the restaurants leftover food. He ate most of it. She also recalled him ordering one alcoholic shot. It was a shot of "Kinky."
  - She recalled [redacted] ordering two alcoholic drinks at the bar. She remembered the drinks being called "Starry Night." She did not know how to make them. She does not recall [redacted] sitting at the bar. She remembered her wandering within the bar and exiting several times.
  - [redacted] remembers [redacted] being inside the bar. She said [redacted] did not sit at the bar, did not order anything, drink or food. She said [redacted] was kind of in the "background", and was "quiet". She remembers [redacted] going outside on several occasions. She could tell that [redacted] had been drinking because her eyes appeared sleepy. She does not remember anyone giving [redacted] anything to drink.

WABASHA COUNTY SHERIFF'S OFFICE

SUPPLEMENTAL REPORT

ICR: 2012-001770

- When asked if she remembered any other bartenders serving [redacted] drinks, or people giving them drinks, she stated again that was her first night bartending and doesn't remember seeing anything.
- [redacted] said she finished her shift around the 2200-2230 hour. She believes she left before [redacted], and [redacted] did. She did not see them leave the bar when outside.
- [redacted] did not recall any other events that evening pertaining to the incident.

- I asked that she call me if she has any other information. She understood.
- I cleared the call.

End of Report

Deputy Name & Badge Number

STURGIS/510

WABASHA COUNTY SHERIFF'S OFFICE

SUPPLEMENTAL REPORT

ICR: 2012-001770

Special Notes or Instructions:

CO ATTY FORMAL COMPL ___ CO ATTY REVIEW ___ CITY ATTY FORMAL COMPL ___ CITY ATTY REVIEW ___

OTHER:

Recordings:

- Digital Photos __ Digital Video__ Audio Recording__ Squad Video__ CD__ DVD__
  Specify _____

Date of This Report: 08/12/2012

SYNOPSIS:

- On 08/09/2012 at approximately 1337 hours, I, Deputy Sturgis, #510, of the Wabasha County Sheriff's Office performed a follow-up phone call with [redacted]
- I informed him as to the reason of the phone call. He understood.
- During the statement with [redacted] he said:
  - He did not know [redacted], but knew of him. He met him once before at the bar.
  - He knew of [redacted] but did not know her personally.
  - Did not know of [redacted] until after that evening.
  - Said his shift was 1600 – 2200 in the kitchen. And from 2200 to close he bartends.
  - He was working in the kitchen and remembered when [redacted] came into the bar. He [redacted]) was drenched from the water. [redacted] stopped and said hi to him on his way to the bathroom.
  - When he was finished working in the kitchen, they [redacted] were already gone.
  - He had gone out into the bar area (unknown time), and placed the leftover food out on the bar.
  - He saw all of them at different times. They were in and out of the bar.
  - Saw [redacted] drinking at Die[redacted]. Remembered two shots being served to [redacted] and [redacted] or at least saw them ordering them. He remembered having to make the shots.
  - Believes [redacted] was in the bar, but didn't see her at the bar. He remembers her being behind the group.
  - Has been bartending for about a year. The only reason he thinks they seemed intoxicated is because they came in wet. He thought that because they were driving the Ranger in the rain they would have had consumed alcohol.
  - He said [redacted] looked to be intoxicated.

WABASHA COUNTY SHERIFF'S OFFICE

SUPPLEMENTAL REPORT | **ICR: 2012-001770**

- He couldn't tell if [redacted] was intoxicated or not.
- Said the group wasn't bothering anyone, didn't cause any problems.
- Thinks they left around 2200 – 2230 hours.
- Said that an off duty employee, (later told as [redacted]) observed the two females drinking vodka that was in the Ranger.
- He went out to investigate and believes the vodka was in the Ranger.
- He did not serve anyone, only made the two shots, (Starry Night).

Above statements paraphrased for this report. See audio file for complete statement.

- I asked that [redacted] call if he had any further information. He agreed.
- I cleared the call.

End of Report

Deputy Name & Badge Number

STURGIS/510

COPY

WABASHA COUNTY SHERIFF'S OFFICE

SUPPLEMENTAL REPORT

ICR: 2012-001770

Special Notes or Instructions:

CO ATTY FORMAL COMPL ___ CO ATTY REVIEW ___ CITY ATTY FORMAL COMPL ___ CITY ATTY REVIEW ___

OTHER:

Recordings:

- Digital Photos __ Digital Video__ Audio Recording_x_ Squad Video__ CD__ DVD__
  Specify _____

Date of This Report: 08/12/2012

SYNOPSIS:

- Also on 08/09/2012, around the 1145 hour, I, Deputy Sturgis, #510, of the Wabasha County Sheriff's Office received a phone call from [redacted]
  - (Earlier in the week, [redacted] and I had arranged to meet in Rochester around the 1030 hour on 08/10/2012 to discuss the ATV crash.)
- [redacted] stated that she could no longer do the interview at her home because of a break-up with her boyfriend. She stated that she could give the statement at a public place. She also stated she wanted to bring her cousin for moral support. She questioned if she was being charged with anything. I stated to her that she possibly could but it was not up to me.
- On 08/09/2012 at approximately 1415 hours, I received another phone call from [redacted]. She stated that she no longer wants to meet and does not want to give a statement. She also stated that when she does give a statement, she would like her attorney present. I advised her to be in touch and we cancelled the scheduled meeting.
- ----------
- Also on 08/09/2012, I received a voicemail from [redacted] brother, [redacted]. He stated that his wife received a forwarded voicemail that he felt was suspicious and pertinent to the case.
- I called [redacted] back. He stated that his wife [redacted] received a forwarded voicemail message from [redacted] The message stated that [redacted] needed to know what [redacted] said to the cops because she wasn't going to be truthful. I advised I would stop at his residence to listen to the message.
- On 08/09/2012 at 1530 hours, I met with [redacted] and [redacted] at their home. They briefed me on the message. I asked that [redacted] play the message so I could record it. She agreed. The voicemail stated that following:

WABASHA COUNTY SHERIFF'S OFFICE

SUPPLEMENTAL REPORT | **ICR: 2012-001770**

- ([redacted] leaving a message regarding the forward, twice).
- [redacted] stated: "Hey [redacted] it's [redacted] Um, I really need to you to call me back. Um, one of the cops had called and said he needed to meet with me. His name is Tom. But, um, I really need to know what you had said to him because I'm not gonna full force come out and tell everything that happened because that's shits not…. not cool. So, yeah, if you would gimme a call back as soon as you can. I'm supposed to meet with him on Friday, so. Ok".
- End of message.

- [redacted]ttempted to forward the message to my cell phone and it did not work.
- [redacted] and [redacted] stated that neither [redacted] nor [redacted] know law enforcement has the previous message.
- I cleared the call.

End of Report

Deputy Name & Badge Number

STURGIS/510

COPY

WABASHA COUNTY SHERIFF'S OFFICE

SUPPLEMENTAL REPORT

ICR: 2012-001770

Special Notes or Instructions:

CO ATTY FORMAL COMPL ___ CO ATTY REVIEW ___ CITY ATTY FORMAL COMPL ___ CITY ATTY REVIEW ___

OTHER:

Recordings:

- Digital Photos __ Digital Video__ Audio Recording__ Squad Video__ CD__ DVD__
  Specify _____

Date of This Report:

SYNOPSIS:

- On 08/12/2012 at 1250 hours, I, Deputy Sturgis, #510, of the Wabasha County Sheriff's Office made a follow-up phone call to [redacted], DOB [redacted]
- I advised her as to the reason of the call. She understood.
- During the statement with [redacted] she said,
  - She was waiting tables that evening.
  - Her shift was 1700 – 2230/2300 hours.
  - She knew who [redacted] was. She also knew [redacted] She did not know the younger girl that was with them. Never seen her before.
  - They all came in soaking wet. She thinks they came in around 2100 hours or so. Before 2230 though.
  - She remembers [redacted] carrying around a [redacted] during the evening.
  - Remembered [redacted] and [redacted] standing by the bathrooms. She had inquired if they were old enough to drink and she [redacted] said no, so [redacted] warned the bartender.
  - Believed [redacted] ordered a couple of drinks.
  - Said [redacted] was definitely intoxicated and said [redacted] was just a little weird.
  - Believes all parties were still there (at the bar) when she left.
  - Said [redacted] and [redacted] were going back and forth outside.
  - I asked that she call with any additional information. She agreed.

  Above statement was paraphrased for this report. See audio file for complete statement.
- I cleared the follow-up with [redacted]

WABASHA COUNTY SHERIFF'S OFFICE

SUPPLEMENTAL REPORT	ICR: 2012-001770

End of Report

Deputy Name & Badge Number

STURGIS/510

COPY

WABASHA COUNTY SHERIFF'S OFFICE

SUPPLEMENTAL REPORT

ICR: 2012-01770

Special Notes or Instructions:

CO ATTY FORMAL COMPL ___ CO ATTY REVIEW ___ CITY ATTY FORMAL COMPL ___ CITY ATTY REVIEW ___

OTHER:

Recordings:

- Digital Photos __ Digital Video__ Audio Recording__ Squad Video__ CD__ DVD__
  Specify _____

Date of This Report: 08/20/2012

SYNOPSIS:

- On 08/20/2012 at approximately 0633 hours, I, Deputy Sturgis, #510, of the Wabasha County Sheriff's Office received a phone call from [redacted], DOB [redacted]
- He was returning my phone call.
- I advised him for the reason of the call. He understood.
- During the statement, [redacted] said:
  - He was at the bar, but was not working the evening of the crash.
  - [redacted] knew who [redacted] was, knew [redacted] and did not know who [redacted] was.
  - He remembers [redacted] walking around with a Diet [redacted] He also remembered [redacted] and [redacted] having some shots. He thought at two different times.
  - [redacted] spent some of the time outside of the bar. He noticed [redacted] and [redacted] mixing their own drinks with vodka that was stored in the Ranger. He saw the bottle of vodka. He remembered them making up to three different drinks (at different times). He said both would finish their drinks before returning into the bar.
  - Was outside the bar when [redacted] and [redacted] left on the Ranger.
  - Stated that [redacted] was driving, [redacted] was in the middle, and [redacted] was on the far right.
  - Does not recall any other events of that evening.
- I asked that he call if he has any additional information. He agreed.
- I cleared the call.

End of Report

Deputy Name & Badge Number

STURGIS/510

Utility Vehicle Data Record Sheet

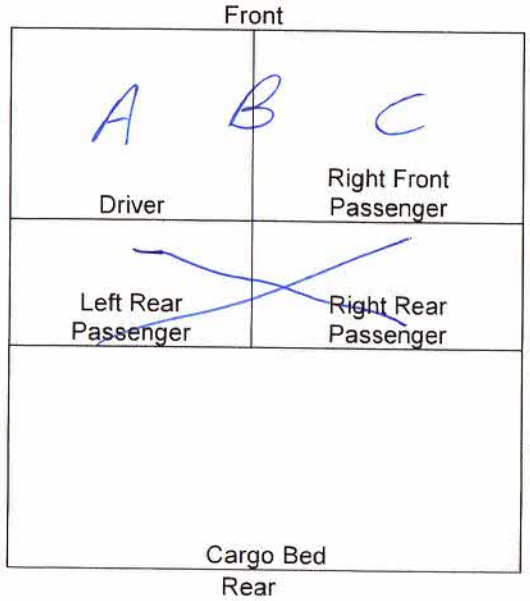

The Utility Vehicle

A:		
Age: 18	Height: UNK	
Gender: F	Weight: UNK	
Helmet (Y/N): UNK	Seatbelt (Y/N): Y	
Killed/Injured/Neither/Unknown: UNK		
Injury Description:		
Did vehicle land on victim: No		
Ejected (Either partially or fully): Fully		

B:		
Age: 34	Height: UNK	
Gender: M	Weight: UNK	
Helmet (Y/N): UNK	Seatbelt (Y/N): UNK	
Killed/Injured/Neither/Unknown: Killed		
Injury Description: Drowning		
Did vehicle land on victim: Yes		
Ejected (Either partially or fully): Partially		

C:		
Age: 24	Height: UNK	
Gender: F	Weight: UNK	
Helmet (Y/N): UNK	Seatbelt (Y/N): Y	
Killed/Injured/Neither/Unknown: Injured		
Injury Description: Chest		
Did vehicle land on victim: Yes		
Ejected (Either partially or fully): Fully		

D:		
Age:	Height:	
Gender:	Weight:	
Helmet (Y/N):	Seatbelt (Y/N):	
Killed/Injured/Neither/Unknown:		
Injury Description:		
Did vehicle land on victim:		
Ejected (Either partially or fully):		

E:		
Age:	Height:	
Gender:	Weight:	
Helmet (Y/N):	Seatbelt (Y/N):	
Killed/Injured/Neither/Unknown:		
Injury Description:		
Did vehicle land on victim:		
Ejected (Either partially or fully):		

F:		
Age:	Height:	
Gender:	Weight:	
Helmet (Y/N):	Seatbelt (Y/N):	
Killed/Injured/Neither/Unknown:		
Injury Description:		
Did vehicle land on victim:		
Ejected (Either partially or fully):		

*If victim(s) were injured/killed, please include the other relevant information requested in the assignment message in the text of the IDI

Using the figure on the left, please fill in where the occupants were in the vehicle at the time of the incident using A, B, C, etc. to identify the occupant(s)' location. Fill in the occupants' characteristics in the corresponding location on the right. For example, the driver could be assigned to the letter 'A' and the letter 'A' would be placed in the diagram in the box designated 'Driver', and the drivers' characteristics would be filled on the right. If there were more than six occupants (or more room is needed), please add the other passenger(s)' information (or any other information) as needed. If information is not available, please indicate by 'na'.

Note: Not all locations indicated on the diagram exist in all types of utility vehicles. Please only use the locations that correspond to the incident vehicle. Please place an 'X' over the area if the vehicle was not equipped with the component.

U.S. Consumer Product Safety Commission

Task Number: 130129HWE0009

Date: 02/15/2013

Status of Missing Document(s)

The official records below were requested for this investigation report, but could not be obtained:

1. Autopsy Report - Wabasha County Medical Examiner
2.
3.
4.
5.
6.

TASK NUMBER : 130129HWE0009

PRODUCT SEARCH HISTORY:

Search of www.CPSC.gov website found multiple recalls related to similar products.

Search of IPII database found multiple prior complaints regarding this product.

INTERNAL USE ONLY

U.S. CONSUMER PRODUCT SAFETY COMMISSION

WARNING - INTERNAL USE ONLY

Do not release this information outside CPSC

CONTACT LIST

Minnesota Department of Natural Resources
15011 Hwy 115
Little Falls, MN 56345

Wabasha County Sheriff
848 17th Street East
Wabasha, MN 55981-5033
651-565-3361

Wabasha County Medical Examiner
12005 5th Grant
Wabasha, MN 55981
507-696-0248

EPIDEMIOLOGIC INVESTIGATION REPORT

1. Task Number	2. Investigator's ID	
130311HCC3498	8554	

3. Office Code	4. Date of Accident YR MO DAY	5. Date Initiated YR MO DAY
840	2011 02 20	2013 03 18

6. Synopsis of Accident or Complaint **UPC**

A 64 year old man was driving an off-road vehicle (UTV) in the open desert while a 51 year old friend sat in the front passenger seat. They were not wearing helmets nor did they use the safety harnesses that were attached to each of the front seats. The vehicle was initially traveling at about 40 miles per hour then slowed down to about 20 miles per hour as the driver made a left turn. During this turn the driver suddenly speeded up. The passenger was ejected from the vehicle as the vehicle began to roll/turn over. The driver ended up under the turned over vehicle. Local officials were contacted and the driver was transported to a hospital where he died.

7. Location (Home, School, etc)	8. City	9. State
9 - SPORTS OR RECREATION PLACE	NORTH SHORE	CA

10A. First Product	10B. Trade/Brand Name	10C. Model Number
5044 - UTILITY VEHICLES	POLARIS RANGER XP 900	[redacted]

10D. Manufacturer Name and Address
POLARIS INDUSTRIES INC.
2100 HIGHWAY 55
MEDINA, MN 55340

11A. Second Product	11B. Trade/Brand Name	11C. Model Number
0	NONE	NONE

11D. Manufacturer Name and Address
NONE

12A. Hispanic or Latino	12B. Race	12C. Race Source
9 - Refused	1 - White Other:	3 - Official Document

13. Age of Victim	14. Sex	15. Disposition	16. Injury Diagnosis
64	1 - Male	8 - Death	62 - Intern. Org. Inj.

17. Body Part(s) Involved	18. Respondent	19. Type of Investigation	20. Time Spent (Operational / Travel)
31 - UPPER TRUNK	3 - 2nd Hand Info Only	2 - Telephone	7.00 / 0.00

21. Attachment(s)	22. Case Source	23. Sample Collection Number
9 - Multiple Attachments	14 - Death Certificate	

24. Permission to Disclose Name (Non NEISS Cases Only)

○ Yes ◉ No ○ Yes for Manuf. Only ○ Verbal ○ Written

25. Review Date	26. Reviewed By	27. Regional Office Director
04/09/2013	9021	Frank J. Nava

28. Distribution	29. Source Document Number
Sarah Garland; Tanya L. Topka	1106037432

BACKGROUND

This assignment was issued as a follow-up to a Death Certificate involving the Utilitarian Terrain Vehicle (UTV) related death of a 64 year old man. Information in this report was obtained from local police and coroner's personnel.

INCIDENT

During February 2011 the 64 year old victim, his wife and other people decided to take their off-road-vehicles out into the desert and camp over the weekend.

The victim's wife told the Highway Patrol Officer that her husband bought his off-road-vehicle (a UTV) around Valentine's Day. This UTV had four wheels, bucket seats, seat belts, a steering wheel and head lights.

The victim and his wife arrived at the camp with his UTV around 10 am on Friday, February 18, 2011.

The people at this camp held a gathering that included a pot luck which began around 3 pm on Saturday. It lasted the entire evening.

This crash occurred during Sunday, February 20, 2011.

The victim and his wife woke up at about 7:30 am. They began riding in the victim's UTV in the open desert around 10 am that morning.

It was around 5 pm when the victim and his wife drove the UTV back to the camp. They then returned to their trailer and ate some food.

A friend came over to the victim's trailer after 6 pm. The victim and his friend were going to take the victim's UTV out into the desert and check the vehicle's lights.

They got into the UTV and left the camp.

The Highway Patrol Officer who investigated this crash reported that the weather was clear, cold and calm. He described the terrain as consisting of wet/muddy soil and sparse vegetation.

The base camp was located about 150 feet to the west of the injury site while a small dirt hill was to the east.

The victim was driving the vehicle (sitting in the front driver's seat) while his friend rode as a passenger (sitting in the front passenger seat).

The sky was dark.

The Passenger told the Patrol Officer that the victim was going to show him the high intensity lights of his vehicle. He stated that neither of them had on a helmet nor were they using the vehicle's safety belts.

He indicated that the vehicle was traveling about 40 miles per hours as they rode along the desert sand. Suddenly the victim began slowing down the vehicle's speed to about 20 miles per hour as he prepared to make a left turn.

While making the left turn the victim suddenly speeded up the vehicle. The passenger was then ejected from the vehicle and the vehicle started to roll/turn over.

The passenger got up off the ground and went over to the overturned vehicle. He found the victim pinned under the left side of the vehicle.

According to the passenger, he returned to the camp and told the other campers (the victim's wife and friends) about the crash.

Some of the campers ran out to the injury site, turned the UTV back over onto its wheels and checked the victim. They contacted local officials.

The victim was flown by helicopter to a local medical center for treatment before the Patrol Officer arrived at the scene.

The Highway Patrol Officer was dispatched to the scene around 6:30 pm. He arrived around 7:30 pm.

The victim's UTV was removed from the injury site before the Officer arrived at the scene.

The Officer subsequently examined the vehicle. He reported that it had suffered some minor scratches to both sides. The roll cage was covered in mud which had already dried and some starches were visible to the left front side of the vehicle.

He noted that 5-point latch and link harnesses were installed in both the driver's and passenger's seats. The Officer indicated that these harnesses did not appear to be stretched out. It was his opinion that these harnesses had not have been used by either the driver or his passenger.

During his inspection of the vehicle the Officer reported that its tires were in good condition. He did not find any mechanical defects during his examination.

The victim died from his injuries while being treated at the hospital. His death was pronounced by a physician at 8:14 pm.

Patrol Officers met with the victim's wife at the hospital, interviewed her about this crash and took several photographs of the victim. They did not take photographs of the victim's vehicle or of the injury scene.

Copies of the police reports are attached as exhibit # 1.

The victim's death was investigated by a Deputy Coroner from the County Sheriff's Office and an autopsy was performed by a Forensic Pathologist.

According to the Pathologist, the victim weighed 294 pounds and was 6 feet tall. He determined that the victim's cause of death was blunt impact injuries to the torso. Blood panel tests for alcohol and drugs were negative.

A copy of the Coroner's Investigation Report is attached as exhibit # 3 while the Coroner's Autopsy Report is included as exhibit # 4.

PRODUCT IDENTIFICATION

This death involved a 2011 Ranger, XP 900, UTV off-road-vehicle from Polaris. Polaris off-road-vehicles are made by Polaris Industries Inc., Medina, MN 55340.

The Patrol Officer identified the vehicle's VIN# as:

[redacted]

CONTACTS:	PURPOSE & RESULTS:
Coroner and Police personnel	Incident scenario & product info

EXHIBITS:

1. CPSC CONTACT SHEET (1 page)
2. POLICE REPORTS (12 pages)
3. CORONER'S REPORT (5 pages)
4. CORONER'S AUTOPSY REPORT (5 pages)
5. UTILITY VEHICLE DATA RECORD SHEET (1 page)

CONTACT & IDENTIFICATION SHEET

Riverside County Sheriff's Coroner
47-225 Oasis Street
Indio, CA 92201

California Highway Patrol
79650 U.S. Highway 86
Indio, CA 92203

During February 20, 2011 a 64 year old man suffered fatal injuries while riding an UTV in the open desert near North Shore, CA.

Victim – [redacted] 64 years old, inches tall, pounds

Passenger – [redacted], age unknown

Vehicle – 2011 Polaris, Ranger, VIN# [redacted]

Hospital – Eisenhower Medical Center

Hospital Physician – [redacted] (pronounced victim's death)

Coroner's Deputy – [redacted], Riverside County Sheriff's Coroner's Office

Forensic Pathologist – , M.D.

Officer – R. Garcia, Jr, # 19758, California Highway Patrol

CPSC contacts with the California Highway Patrol and the County Coroner took place during March 2013 by telephone, fax and mail.

STATE OF CALIFORNIA

TRAFFIC COLLISION REPORT

CHP 555 CARS PAGE 1 (REV 11-06) OPI 065

SPECIAL CONDITIONS	NUMBER INJURED	HIT & RUN FELONY	CITY	JUDICIAL DISTRICT	LOCAL REPORT NUMBER
FATAL	1		UNINCORPORATED	DESERT (INDIO)	2011020096
	NUMBER KILLED	HIT & RUN MISDEMEANOR	COUNTY	REPORTING DISTRICT / BEAT	DAY OF WEEK / TOW AWAY
	1		RIVERSIDE	906	SUNDAY / YES [X] NO

LOCATION				
COLLISION OCCURRED ON: OPEN DESERT	MO DAY YEAR: 02/20/2011	TIME (2400): 1825	NCIC #: 9630	OFFICER I.D.: 019758
MILEPOST INFORMATION:	GPS COORDINATES LATITUDE [redacted] LONGITUDE - [redacted]		PHOTOGRAPHS BY: D. CRILIP, #19890 8 DIGITAL PHOTOGRAPHS	[ ] NONE
[ ] AT INTERSECTION WITH: [X] OR: [redacted]		STATE HWY REL [ ] YES [X] NO		

PARTY	DRIVER'S LICENSE NUMBER	STATE	CLASS	AIR BAG	SAFETY EQUIP.	VEH. YEAR	MAKE / MODEL / COLOR	LICENSE NUMBER	STATE
1	[redacted]	CA	C	P	H	2011	POLARIS RANGER WHT	NONE	CA

DRIVER [X]	NAME(FIRST, MIDDLE, LAST): [redacted]						OWNER'S NAME	[X] SAME AS DRIVER		
PEDESTRIAN [ ]	STREET ADDRESS: [redacted]						OWNER'S ADDRESS	[X] SAME AS DRIVER		
PARKED VEHICLE [ ]	CITY / STATE / ZIP: [redacted]						DISPOSITION OF VEHICLE ON ORDERS OF: [redacted]	[X] OFFICER	[ ] DRIVER	[ ] OTHER
BICYCLIST [ ]	SEX: M	HAIR: BLN	EYES: BLU	HEIGHT: 6-02	WEIGHT: 240	BIRTHDATE MO DAY YEAR: [redacted]	RACE: W	PRIOR MECH. DEFECTS	[X] NONE APP.	[ ] REFER TO NARRATIVE
OTHER [ ]	HOME PHONE: [redacted]		BUSINESS PHONE				VEHICLE IDENTIFICATION NUMBER: [redacted]			
	INSURANCE CARRIER: NONE		POLICY NUMBER				VEHICLE TYPE: 06	DESCRIBE VEHICLE DAMAGE: [ ] UNK [ ] NONE [X] MINOR [ ] MOD [ ] MAJOR [ ] ROLL-OVER	SHADE IN DAMAGED AREA (TOP VIEW)	
	DIR OF TRAVEL: N	ON STREET OR HIGHWAY: OPEN DESERT		SPEED LIMIT			CA ___ DOT ___ CAL-T ___ TCP/PSC ___ MC/MX ___			

PARTY 2	DRIVER'S LICENSE NUMBER	STATE	CLASS	AIR BAG	SAFETY EQUIP.	VEH. YEAR	MAKE / MODEL / COLOR	LICENSE NUMBER	STATE

DRIVER [ ]	NAME(FIRST, MIDDLE, LAST)						OWNER'S NAME	[ ] SAME AS DRIVER		
PEDESTRIAN [ ]	STREET ADDRESS						OWNER'S ADDRESS	[ ] SAME AS DRIVER		
PARKED VEHICLE [ ]	CITY / STATE / ZIP						DISPOSITION OF VEHICLE ON ORDERS OF:	[ ] OFFICER	[ ] DRIVER	[ ] OTHER
BICYCLIST [ ]	SEX	HAIR	EYES	HEIGHT	WEIGHT	BIRTHDATE MO DAY YEAR	RACE	PRIOR MECHANICAL DEFECTS	[ ] NONE APP.	[ ] REFER TO NARRATIVE
OTHER [ ]	HOME PHONE		BUSINESS PHONE				VEHICLE IDENTIFICATION NUMBER:			
	INSURANCE CARRIER		POLICY NUMBER				VEHICLE TYPE	DESCRIBE VEHICLE DAMAGE: [ ] UNK [ ] NONE [ ] MINOR [ ] MOD [ ] MAJOR [ ] ROLL-OVER	SHADE IN DAMAGED AREA	
	DIR OF TRAVEL	ON STREET OR HIGHWAY		SPEED LIMIT			CA ___ DOT ___ CAL-T ___ TCP/PSC ___ MC/MX ___			

PARTY 3	DRIVER'S LICENSE NUMBER	STATE	CLASS	AIR BAG	SAFETY EQUIP.	VEH. YEAR	MAKE / MODEL / COLOR	LICENSE NUMBER	STATE

DRIVER [ ]	NAME(FIRST, MIDDLE, LAST)						OWNER'S NAME	[ ] SAME AS DRIVER		
PEDESTRIAN [ ]	STREET ADDRESS						OWNER'S ADDRESS	[ ] SAME AS DRIVER		
PARKED VEHICLE [ ]	CITY / STATE / ZIP						DISPOSITION OF VEHICLE ON ORDERS OF:	[ ] OFFICER	[ ] DRIVER	[ ] OTHER
BICYCLIST [ ]	SEX	HAIR	EYES	HEIGHT	WEIGHT	BIRTHDATE MO DAY YEAR	RACE	PRIOR MECHANCIAL DEFECTS	[ ] NONE APP.	[ ] REFER TO NARRATIVE
OTHER [ ]	HOME PHONE		BUSINESS PHONE				VEHICLE IDENTIFICATION NUMBER:			
	INSURANCE CARRIER		POLICY NUMBER				VEHICLE TYPE	DESCRIBE VEHICLE DAMAGE: [ ] UNK [ ] NONE [ ] MINOR [ ] MOD [ ] MAJOR [ ] ROLL-OVER	SHADE IN DAMAGED AREA	
	DIR OF TRAVEL	ON STREET OR HIGHWAY		SPEED LIMIT			CA ___ DOT ___ CAL-T ___ TCP/PSC ___ MC/MX ___			

PREPARER'S NAME	DISPATCH NOTIFIED	REVIEWER'S NAME	DATE REVIEWED
R. GARCIA JR 019758	[X] YES [ ] NO [ ] N/A	3-14-11 12655	3/14/11

STATE OF CALIFORNIA
TRAFFIC COLLISION CODING
CHP 555 CARS PAGE2 (REV. 11-06) OPI 065

DATE OF COLLISION (MO. DAY YEAR)	TIME(2400)	NCIC #	OFFICER I.D.	NUMBER
02/20/2011	1825	9630	019758	2011020096

PROPERTY DAMAGE	OWNER	OWNER ADDRESS	NOTIFIED
	DESCRIPTION OF DAMAGE		☐ YES ☐ NO

SEATING POSITION

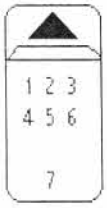

1 - DRIVER
2 TO 6 - PASSENGERS
7 - STA. WGN REAR
8 - RR. OCC TRK. OR VAN
9 - POSITION UNKNOWN
0 - OTHER

SAFETY EQUIPMENT

OCCUPANTS
A - NONE IN VEHICLE
B - UNKNOWN
C - LAP BELT USED
D - LAP BELT NOT USED
E - SHOULDER HARNESS USED
F - SHOULDER HARNESS NOT USED
G - LAP/SHOULDER HARNESS USED
H - LAP/SHOULDER HARNESS NOT USED
J - PASSIVE RESTRAINT USED
K - PASSIVE RESTRAINT NOT USED

L - AIR BAG DEPLOYED
M - AIR BAG NOT DEPLOYED
N - OTHER
P - NOT REQUIRED

CHILD RESTRAINT
Q - IN VEHICLE USED
R - IN VEHICLE NOT USED
S - IN VEHICLE USE UNKNOWN
T - IN VEHICLE IMPROPER USE
U - NONE IN VEHICLE

M/C BICYCLE - HELMET

DRIVER	PASSENGER
V - NO	X - NO
W - YES	Y - YES

EJECTED FROM VEHICLE
0 - NOT EJECTED
1 - FULLY EJECTED
2 - PARTIALLY EJECTED
3 - UNKNOWN

INATTENTION CODES

A - CELL PHONE HANDHELD
B - CELL PHONE HANDSFREE
C - ELECTRONIC EQUIPMENT
D - RADIO / CD
E - SMOKING
F - EATING
G - CHILDREN
H - ANIMALS
I - PERSONAL HYGIENE
J - READING
K - OTHER

ITEMS MARKED BELOW FOLLOWED BY AN ASTERISK (*) SHOULD BE EXPLAINED IN THE NARRATIVE.

	PRIMARY COLLISION FACTOR (LIST NUMBER (#) OF PARTY AT FAULT)
1	A VC SECTION VIOLATED: CITED ☐ YES ☒ NO 38314
	B OTHER IMPROPER DRIVING*
	C OTHER THAN DRIVER*
	D UNKNOWN*
	WEATHER (MARK 1 TO 2 ITEMS)
X	A CLEAR
	B CLOUDY
	C RAINING
	D SNOWING
	E FOG / VISIBILITY FT.
	F OTHER:*
	G WIND
	LIGHTING
	A DAYLIGHT
	B DUSK - DAWN
	C DARK - STREET LIGHTS
X	D DARK - NO STREET LIGHTS
	E DARK - STREET LIGHTS NOT FUNCTIONING*
	ROADWAY SURFACE
	A DRY
X	B WET
	C SNOWY - ICY
	D SLIPPERY (MUDDY, OILY, ETC.)
	ROADWAY CONDITION(S) (MARK 1 TO 2 ITEMS)
	A HOLES, DEEP RUT*
	B LOOSE MATERIAL ON ROADWAY*
	C OBSTRUCTION ON ROADWAY*
	D CONSTRUCTION - REPAIR ZONE
	E REDUCED ROADWAY WIDTH
	F FLOODED*
	G OTHER*:
X	H NO UNUSUAL CONDITIONS

	TRAFFIC CONTROL DEVICES
	A CONTROLS FUNCTIONING
	B CONTROLS NOT FUNCTIONING*
	C CONTROLS OBSCURED
X	D NO CONTROLS PRESENT / FACTOR*
	TYPE OF COLLISION
	A HEAD - ON
	B SIDE SWIPE
	C REAR END
	D BROADSIDE
	E HIT OBJECT
X	F OVERTURNED
	G VEHICLE / PEDESTRIAN
	H OTHER*:
	MOTOR VEHICLE INVOLVED WITH
X	A NON - COLLISION
	B PEDESTRIAN
	C OTHER MOTOR VEHICLE
	D MOTOR VEHICLE ON OTHER ROADWAY
	E PARKED MOTOR VEHICLE
	F TRAIN
	G BICYCLE
	H ANIMAL:
	I FIXED OBJECT:
	J OTHER OBJECT:
	PEDESTRIAN'S ACTIONS
X	A NO PEDESTRIANS INVOLVED
	B CROSSING IN CROSSWALK AT INTERSECTION
	C CROSSING IN CROSSWALK - NOT AT INTERSECTION
	D CROSSING - NOT IN CROSSWALK
	E IN ROAD - INCLUDES SHOULDER
	F NOT IN ROAD
	G APPROACHING / LEAVING SCHOOL BUS

1	2	3	SPECIAL INFORMATION
			A HAZARDOUS MATERIAL
			B CELL PHONE HANDHELD IN USE
			C CELL PHONE HANDSFREE IN USE
X			D CELL PHONE NOT IN USE
			E SCHOOL BUS RELATED
			F 75 FT MOTORTRUCK COMBO
			G 32 FT TRAILER COMBO
			H CELL PHONE UNKNOWN
			I
			J
			K
			L
			M
			N
			O
			P
			Q

1	2	3	OTHER ASSOCIATED FACTORS (MARK 1 TO 2 ITEMS)
			A VC SECTION VIOLATED: CITED ☐ YES ☐ NO
			B VC SECTION VIOLATED: CITED ☐ YES ☐ NO
			C VC SECTION VIOLATED: CITED ☐ YES ☐ NO
			D
			E VISION OBSCUREMENT:
			F INATTENTION*:
			G STOP & GO TRAFFIC
			H ENTERING / LEAVING RAMP
			I PREVIOUS COLLISION
			J UNFAMILIAR WITH ROAD
			K DEFECTIVE VEH. EQUIP.: CITED ☐ YES ☐ NO
			L UNINVOLVED VEHICLE
			M OTHER*:
X			N NONE APPARENT
			O RUNAWAY VEHICLE

1	2	3	MOVEMENT PRECEDING COLLISION
			A STOPPED
			B PROCEEDING STRAIGHT
			C RAN OFF ROAD
			D MAKING RIGHT TURN
			E MAKING LEFT TURN
			F MAKING U TURN
			G BACKING
			H SLOWING / STOPPING
			I PASSING OTHER VEHICLE
			J CHANGING LANES
			K PARKING MANEUVER
			L ENTERING TRAFFIC
X			M OTHER UNSAFE TURNING
			N XING INTO OPPOSING LANE
			O PARKED
			P MERGING
			Q TRAVELING WRONG WAY
			R OTHER*:

1	2	3	SOBRIETY - DRUG PHYSICAL (MARK 1 TO 2 ITEMS)
X			A HAD NOT BEEN DRINKING
			B HBD - UNDER INFLUENCE
			C HBD - NOT UNDER INFLUENCE*
			D HBD - IMPAIRMENT UNKNOWN*
			E UNDER DRUG INFLUENCE*
			F IMPAIRMENT - PHYSICAL*
			G IMPAIRMENT NOT KNOWN
			H NOT APPLICABLE
			I SLEEPY / FATIGUED

SKETCH FOR SKETCH DIAGRAM, SEE PAGE 4

INDICATE NORTH

MISCELLANEOUS

STATE OF CALIFORNIA
INJURED / WITNESSES / PASSENGERS
CHP 555 CARS PAGE 3 (REV 11-06) OPI 065

DATE OF COLLISION (MO. DAY YEAR)	TIME(2400)	NCIC #	OFFICER I.D.	NUMBER
02/20/2011	1825	9630	019758	2011020096

WITNESS ONLY	PASSENGER ONLY	AGE	SEX	EXTENT OF INJURY('X' ONE)				INJURED WAS ('X' ONE)					PARTY NUMBER	SEAT POS.	AIR BAG	SAFETY EQUIP.	EJECTED
				FATAL INJURY	SEVERE INJURY	OTHER VISIBLE INJURY	COMPLAINT OF PAIN	DRIVER	PASS.	PED.	BICYCLIST	OTHER					
#		64	M	X				X					1	1	P	H	1

NAME / D.O.B. / ADDRESS [redacted] TELEPHONE [redacted]

(INJURED ONLY) TRANSPORTED BY: REACH 4 (HELICOPTER) TAKEN TO: EISENHOWER MEDICAL CENTER

DESCRIBE INJURIES: BLUNT IMPACT INJURIES TO TORSO (FATAL INJURIES).
TREATED AND PRONOUNCED BY DR. [redacted] AT 2014 HRS.
CORONER'S CASE [redacted]

☐ VICTIM OF VIOLENT CRIME NOTIFIED

#		51	M				X		X				1	3	P	H	1

NAME / D.O.B. / ADDRESS [redacted] TELEPHONE [redacted]

(INJURED ONLY) TRANSPORTED BY: SEEK OWN AID TAKEN TO:

DESCRIBE INJURIES: COMPLAINT OF PAIN TO HEAD.

☐ VICTIM OF VIOLENT CRIME NOTIFIED

X # 1		63	F														

NAME / D.O.B. / ADDRESS [redacted] TELEPHONE [redacted]

(INJURED ONLY) TRANSPORTED BY: TAKEN TO:

DESCRIBE INJURIES:

☐ VICTIM OF VIOLENT CRIME NOTIFIED

#																	

NAME / D.O.B. / ADDRESS TELEPHONE

(INJURED ONLY) TRANSPORTED BY: TAKEN TO:

DESCRIBE INJURIES:

☐ VICTIM OF VIOLENT CRIME NOTIFIED

#																	

NAME / D.O.B. / ADDRESS TELEPHONE

(INJURED ONLY) TRANSPORTED BY: TAKEN TO:

DESCRIBE INJURIES:

☐ VICTIM OF VIOLENT CRIME NOTIFIED

#																	

NAME / D.O.B. / ADDRESS TELEPHONE

(INJURED ONLY) TRANSPORTED BY: TAKEN TO:

DESCRIBE INJURIES:

☐ VICTIM OF VIOLENT CRIME NOTIFIED

PREPARER'S NAME	I.D. NUMBER	MO. DAY YEAR	REVIEWER'S NAME	MO. DAY YEAR
R. GARCIA JR	019758	02/20/2011		

STATE OF CALIFORNIA
FACTUAL DIAGRAM
CHP 555 Page 4(Rev. 11-06) OPI 065

DATE OF COLLISION (MO. DAY YEAR)	TIME (2400)	NCIC #	OFFICER I.D.	NUMBER
2/20/2011	1825	9630	19758	2011020096

ALL MEASUREMENTS ARE APPROXIMATE AND NOT TO SCALE UNLESS STATED (SCALE =)

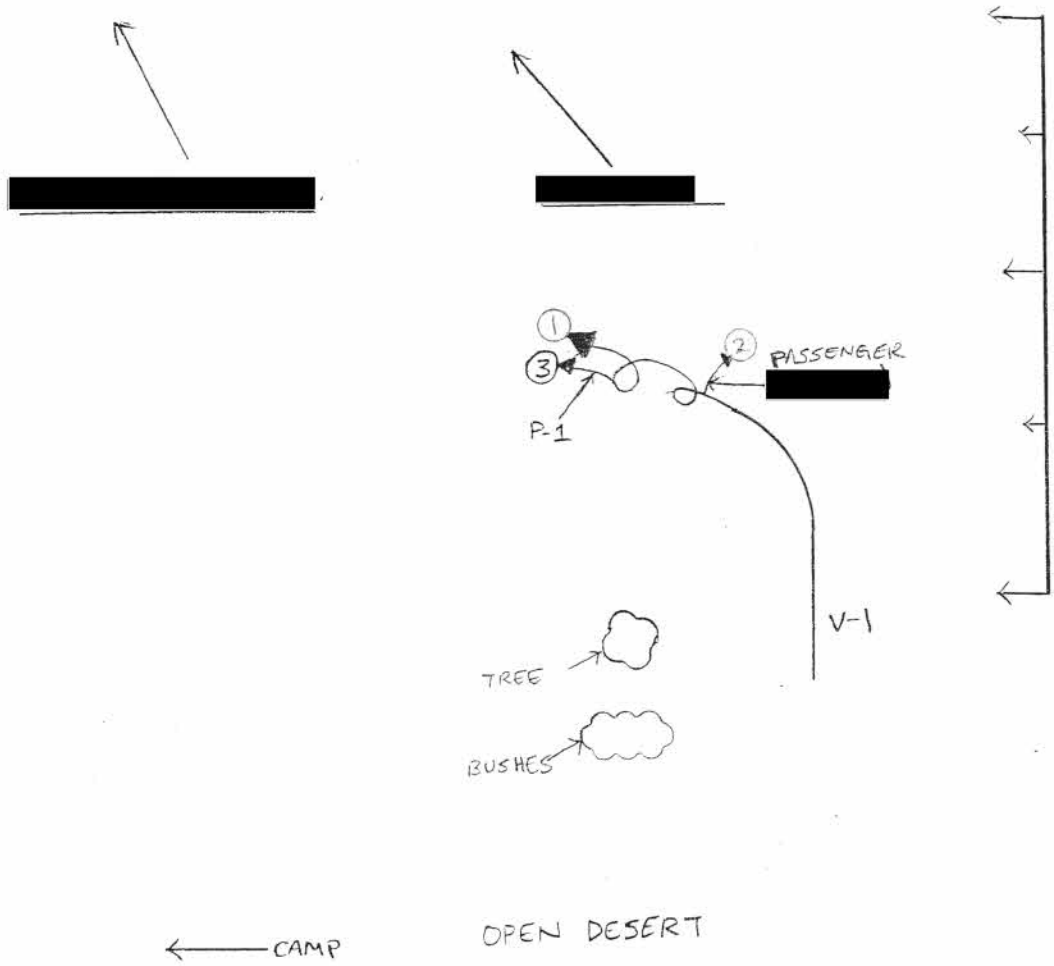

PREPARED BY	I.D. NUMBER	MO. DAY YEAR	REVIEWER'S NAME	MO. DAY YEAR
R. GARCIA	19758	02-24-2011		

c555_b06.frj

STATE OF CALIFORNIA
FACTUAL DIAGRAM
CHP 555 Page 4(Rev. 11-06) OPI 065

Page 5 of 12

DATE OF COLLISION (MO DAY YEAR)	TIME (2400)	NCIC #	OFFICER I.D.	NUMBER
02/20/2011	1825	9630	19758	[illegible]

ALL MEASUREMENTS ARE APPROXIMATE AND NOT TO SCALE UNLESS STATED (SCALE =)

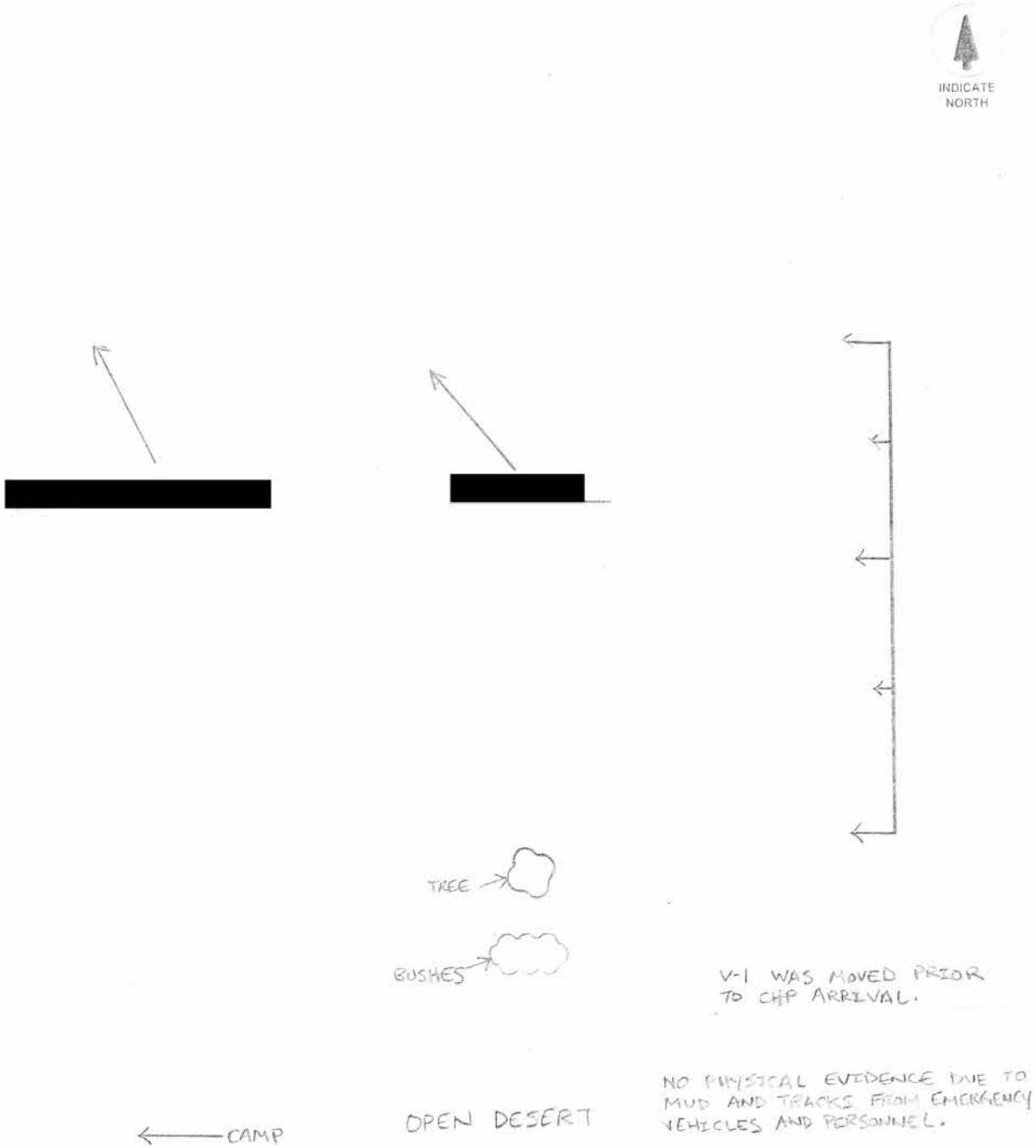

PREPARED BY	I.D. NUMBER	MO DAY YEAR	REVIEWER'S NAME	MO DAY YEAR
R. GARCIA	19758	02-24-2011		

c555_b06.frz

STATE OF CALIFORNIA
NARRATIVE/SUPPLEMENTAL

DATE OF INCIDENT	TIME	NCIC NUMBER	OFFICER I.D.	NUMBER
02/20/2011	1825	9630	019758	2011020096

FACTS

NOTIFICATION:

On 02/20/2011, at 1829 hours, I received a call from CHP dispatch advising of an off-road collision with an ambulance responding. I responded from the CHP office in [redacted] west of [redacted]) and arrived at the scene at 1930 hours. All times, speeds and measurements are approximations unless otherwise stated. All measurements were taken by patrol vehicle odometer.

SCENE DESCRIPTION:

This collision occurred in open desert, in an unincorporated area of Riverside County east of [redacted] of the collision scene is [redacted]. The landscape of the collision scene consisted of wet/muddy soil and sparse vegetation. There is a small dirt hill to the east of the collision scene. At the time of the collision there was a base camp set up approximately 150 feet to the west, where P-1 and passenger ([redacted]) were camping.

The weather at the time of the collision was clear, cold and calm. This collision occurred during the hours of darkness. For further details refer to the Factual Diagram.

PREPARED BY	I.D. NUMBER	DATE	REVIEWER'S NAME	DATE
R. GARCIA JR	019758	02/20/2011		

DATE OF INCIDENT	TIME	NCIC NUMBER	OFFICER I.D.	NUMBER
02/20/2011	1825	9630	019758	2011020096

PARTIES:

Vehicle #1 (V-1) (Polaris Ranger)

V-1 was located at parked at the base camp. V-1 had rolled over after the collision and was parked at the camp site by passenger [redacted] prior to my arrival. V-1's damage consisted of minor scratches to its left and right side. The roll cage on V-1 was covered in mud that had already dried, and had minor scratches to its left front. 5-point latch and link harnesses were installed in the driver's and passenger's seat. Both harnesses appeared to not have been utilized by either occupant. The webbing on both harnesses did not appear to be stretched out. The 5-point harnesses were inspected and appeared to be in proper working order. All of V-1's tires were in good condition. V-1 appeared to be equipped for off road riding purposes. No mechanical defects were noted.

[redacted] (Party #1) (P-1)

P-1 was airlifted to Eisenhower Medical Center prior to my arrival. P-1 sustained traumatic injuries caused by blunt force trauma to his torso. P-1 succumbed to his injuries at Eisenhower Medical Center and was pronounced deceased by Dr. [redacted] at 2014 hours. P-1 was identified by his valid California driver license. P-1 was established to be the driver of V-1 by his injuries being consistent with that of a person being involved in an off road collision, P-1 was the registered owner of V-1, P-1's wife's statement that nobody except P-1 had been driving V-1, P-1's position of rest, the passenger being fully ejected from V-1, and the passenger statement.

PHYSICAL EVIDENCE:

None.

DATE OF INCIDENT	TIME	NCIC NUMBER	OFFICER I.D.	NUMBER
02/20/2011	1825	9630	019758	2011020096

OTHER FACTUAL INFORMATION:

Agencies involved:

CHP (Indio Area):

Officer S. Rivas #18811 - Scene Management.

Officer R. Garcia #19758 - Investigating Officer.

California Department of Forestry (CDF):

Fire Engine #40

Captain De La Cruz

Engineer J. Robinson

Firefighter Record

AMR Medic Unit 303:

Medic [redacted]

EMT [redacted]

Reach 4:

Nurse [redacted]

Pilot [redacted]

Riverside Sheriff's Office:

Deputy Mike Werk #N3115 (Case #2011-01643)

PREPARED BY	I.D. NUMBER	DATE	REVIEWER'S NAME	DATE
R. GARCIA JR	019758	02/20/2011		

24 HOUR PROFILE: ([redacted]):

All witnesses were contacted by me on scene and at Eisenhower Medical Center and the following 24 hour profile of [redacted] was compiled based on the information they provided.

- P-1 and W-1 (Mrs. [redacted] arrived at the camp on Friday, 02/18/11 at approximately 10:00 AM.
- On 02/19/11 at approximately 3:00 PM- people at the camp had a pot luck the entire evening. P-1 and Mrs. [redacted] went to bed at approximately 9:00 PM.
- On 02/20/11 at approximately 7:30 AM- P-1 and Mrs. [redacted] woke up.
- 10:00 AM- P-1 and Mrs. [redacted] went for a ride in V-1.
- 5:00 PM- P-1 and Mrs. [redacted] returned to camp from the ride.
- 6:00 PM- P-1 and Mrs. [redacted] were in their trailer eating chips and getting ready to eat roasted hot dogs, when P-1 and passenger [redacted]) went for a ride in V-1 to check V-1's lights.
- 6:30 PM- P-1 was located by Mrs. [redacted] being assisted by passenger [redacted] pinned underneath V-1.
- No alcohol and/or drugs were found to be a factor in this collision.

STATEMENTS:

[redacted](PARTY #1)(P-1):

I was unable to obtain a statement from P-1 due to the fact that he succumbed to his injuries while at Eisenhower Medical Center and pronounced deceased 02/20/2011 at 2014 hours.

STATEMENTS (CONTINUED):

[redacted] **(Right-Front Passenger)([redacted]):**

I contacted Passenger [redacted] at the base camp. [redacted] was standing near V-1 which was parked at the base camp. [redacted] appeared to be in no pain and had no visible injuries. I had been informed by emergency personnel that there were no passengers during the collision. [redacted] approached me and told me he was a passenger in V-1 as I walked around the base camp looking for witnesses. [redacted] related in essence the following. P-1 was driving V-1 and he was the right front passenger. [redacted] only remembered traveling at an estimated speed of 40 miles per hour prior to P-1 slowing V-1 to approximately 20 miles per hour in preparation for making a left turn. [redacted] related that while in the process of making the turn P-1 began quickly accelerating V-1. [redacted] stated he [redacted]) was ejected as V-1 began to roll and remembers a "flash" when he hit the ground. [redacted] got up off the ground and saw P-1, face down pinned under the left side of V-1. [redacted] went back to the base camp for help. [redacted] stated that he went for a ride with P-1 because P-1 was going to show him V-1's High Intensity lights. [redacted] told me that neither himself nor P-1 were belted or wearing helmets at the time of the collision, and that [redacted] had a dog on his lap during the ride. No other statements were obtained on scene.

[redacted] **(Witness #1)(W-1):**

I contacted W-1 at Eisenhower Medical Center and she related in essence the following information. W-1 related that she did not witness the events leading up to the collision and came upon the collision scene because she was informed by passenger ([redacted]) of what had occurred. W-1 related that she and P-1 were about to eat dinner at approximately 1800 hours, when P-1 decided to show [redacted] the High Intensity lights of V-1 by going for a quick night ride. W-1 related that she saw P-1 driving V-1 away from the base camp.

STATEMENTS (CONTINUED):

W-1 related that P-1 is the only person who had driven V-1 all weekend and since they had bought V-1 around Valentine's Day for that matter. W-1 stated that when she arrived at the scene of the collision V-1 had already been rolled onto its wheels by campers from the camp site and P-1 was lying on his stomach in the open desert.

OPINIONS AND CONCLUSIONS

SUMMARY:

P-1 was driving V-1 in northerly direction, in the open desert area approaching the [redacted] ([redacted]). P-1 began turning V-1 left (west). P-1 was unable to complete the turning movement before the right tires dug themselves into the dirt. V-1 continued to travel in a northerly direction and subsequently overturned. As a result of the collision, the unrestrained right front passenger was fully ejected from V-1 as V-1 overturned. P-1, who was also unrestrained, was fully ejected as V-1 overturned on its left side and P-1 suffered fatal injuries. V-1 came to rest in the open desert, on its left side on top of P-1, facing in a northwesterly direction just south of the [redacted]). It is my opinion that if P-1 would have utilized the 5-point harness at the time of the collision, his extent of injuries would have diminished significantly.

AREAS OF IMPACT (AOI's):

AOI #1 (V-1 Overturned)

The AOI where the right side of V-1 collided with the open desert was located 0.5 miles north of the north roadway edge prolongation of [redacted], and 360 feet east of [redacted]. The AOI was established by the damage to V-1, and the statements.

AOI #2 (Passenger ([redacted]) vs. Ground)

The AOI where [redacted] impacted the ground was located 5 feet north of [redacted] and 360 feet east of [redacted]. The [redacted] was established by statements and visual estimation.

AOI #3 (P-1 vs. Ground)

The AOI where P-1 impacted the ground was located 5 south of AOI #1. and 355 feet east of [redacted]. The AOI was established by statements and visual estimation.

CAUSE:

P-1 ([redacted]) caused this collision by driving V-1 in violation of section 38314 of the California Vehicle Code (unsafe turning movement-off highway vehicle). The cause was determined by the damage to V-1, and statements.

RECOMMENDATIONS:

None.

PREPARED BY	I.D. NUMBER	DATE	REVIEWER'S NAME	DATE
R. GARCIA JR	019758	02/20/2011		

STANLEY SNIFF
Sheriff-Coroner

M.A. WERK
Deputy Coroner, Case Agent
Coroner Bureau / East

CA 033 0027

Riverside County Sheriff-Coroner
Coroner Forensic Center
47-225 Oasis St.
Indio, CA 92201

Telephone: (760) 863-8311
Fax: (760) 863-7031

CORONER'S INVESTIGATION REPORT

DECEDENT NAME (Last, First Middle)
[redacted]

FILE NUMBER	SEX	AGE	DATE OF BIRTH
[redacted]	MALE	64 YEAR(S)	[redacted]

RESIDENCE ADDRESS
[redacted]

DEATH INFORMATION 02/20/2011 @ 2014 (DC: 02/20/2011 @ 2014)
EISENHOWER MEDICAL CENTER
39-000 BOB HOPE DR
RANCHO MIRAGE, CA 92270

INJURY INFORMATION 02/20/2011 @ 1825 (DC: 02/20/2011 @ 1825)
OPEN DESERT
[redacted]

CAUSE OF DEATH
A: BLUNT IMPACT INJURIES TO TORSO - MINUTES
B:
C:
D:
OSC: NONE

THIS IS THE COMPLETE AND FINAL REPORT, AND CONTAINS THE FOLLOWING INDIVIDUAL REPORTS:

- [X] DEPUTY CORONER'S REPORT(S)
- [X] TOXICOLOGY REPORT(S)
- [X] PATHOLOGIST'S REPORT(S)

THIS DEATH HAS BEEN CLASSIFIED AS BEING A RESULT OF: A TRAFFIC ACCIDENT.

[redacted] 3/16/2011
REVIEWED BY DATE

[redacted] 3/17/11
APPROVED BY DATE

Form: CR 1000, Revised: 09/08/2003

RIVERSIDE COUNTY SHERIFF-CORONER

DEATH INVESTIGATION NARRATIVE

INITIAL REPORT

DECEDENT NAME: [redacted] **Case #** [redacted]

Additional Persons Involved:

Name	DOB/ID#	Address	Phone
[redacted]	Lic. [redacted]	Eisenhower Medical Center	(760) 340-3911
Registered Nurse		39000 Bob Hope Drive, Rancho Mirage, CA 92270	
Dr [redacted]	Lic [redacted]	Same as Above	
Medical Doctor			
[redacted]	[redacted]	California Highway Patrol, Indio	(760) 772-8911
Officer		79650 Varner Road, Indio, CA 92203	
Dr. [redacted]	Lic. [redacted]	Kaiser Permanente Medical Offices	(951) 898-7370
Medical Doctor		2055 Kellogg Avenue, Corona, CA 92879	
Dr [redacted]	Lic. [redacted]	Riverside County Sheriff-Coroner's Office	
Pathologist		800 S. Redland Avenue, Perris, CA 92570	(951) 443-2300

Initial Information Obtained:

On Sunday, 02/20/2011, at 2203 hours, I received a call from [redacted] a registered nurse (RN) in the emergency room at Eisenhower Medical Center (EMC). She was reporting the death of [redacted] a 64-year-old male of Phelan, California. He was identified by his wife, [redacted] and by his valid California driver's license number [redacted].

Nurse [redacted] said Mercy Air Medical Transport was en route to Desert Regional Medical Center with [redacted] from the scene of an accident, when he went into full cardiac arrest. The paramedic flight crew initiated advanced cardiac life support (ACLS) with medication intervention. At 1948 hours, the Helicopter landed at the closest hospital, which was EMC. Dr. [redacted] and staff took

Initial Information Obtained Continued:

over the resuscitative efforts. A computerized Tomography (CT) scan was performed on his head, which showed negative findings. [redacted] condition did not improve and Dr. [redacted] pronounced the death at 2014 hours. I told the nurse I would be en route to the hospital and requested a copy of his medical records. I also inquired if any blood had been drawn from [redacted] and was told no.

Details:

On my arrival at the hospital, I met with Officer Rudy Garcia of the California Highway Patrol (CHP) Indio Station. He said the [redacted] were camped with other couples in an open desert area east of [redacted]. He then said [redacted] was the operator of a 2011 white Polaris Ranger XP 900 all terrain vehicle (ATV), which had a roll cage. [redacted] was not wearing a helmet or using the ATV's safety harnesses. [redacted] was making a left turn at approximately 20-30 miles-per-hours (MPH) toward the campsite and the ATV rolled, ejecting [redacted] onto the sand. The ATV then came to rest on top of him, as he lay prone. Officer Garcia said the time of the accident was placed at 1825 hours.

Scene Description:

The scene was in an open desert area, 0.5 miles north of [redacted], and approximately 350-feet east of [redacted] near the town of [redacted].

Deputy Coroner's External Examination of Remains:

a) **Body position:** I saw [redacted] lying on a hospital gurney strapped to a backboard with heavy fabric straps with cervical spine precautions in effect. Attached medical equipment included an esophageal-tracheal airway; intravenous (IV) lines to his left subclavian vein and an intraosseous (IO) in his upper anterior left tibia; blood pressure cuff on his upper

Deputy Coroner's External Examination of Remains Continued:

a) **Body Position:** right arm, oxygen saturation monitor on his right index finger; cardiac defibrillation pads to the anterior chest and back and cardiac sensor patches to his chest and abdomen.

b) **Clothing description:** He was wearing a gray under briefs and blue jean type shorts that had been cut by medical personnel.

c) **Post Mortem Changes, time observed:** At 2250 hours, I noted mild rigor mortis to his extremities, and livor mortis (lividity) to his dependent areas.

d) **Ambient temperatures and method used, time taken:** No temperature readings were taken on this case.

e) **Identifying marks, scars and tattoos:** I noted a large abdominal surgical scar along the midline from the pelvis to just below the sternum. I also noted a tattoo on his right upper arm of a cross with a rose and a banner containing the name '[redacted]'.

f) **Trauma:** I noted what appeared to be severe chest crushing injury with multiple rib fractures, abrasions to both hands and left forearm, also an abrasion on his anterior patella. No defensive wounds or unusual injuries observed and eyes appeared clear.

g) **Decomposition:** No changes were observed at the time of this examination.

h) **Other observations:** He was a large man with a weight of 293-lbs as measured by the Indio Forensic Center scale.

Transportation:

At 2239 hours, I notified coroner's transport to make removal to the Riverside County Sheriff-Coroner Forensic Center in Indio. Transport personnel placed toe tag number 31322 on the body.

RIVERSIDE COUNTY SHERIFF-CORONER

DEATH INVESTIGATION NARRATIVE

INITIAL REPORT

Medical History and Medications:

[redacted]'s family reported Dr. [redacted] was his primary care physician. He had prescribed [redacted] Insulin, [redacted], [redacted], [redacted], [redacted] and [redacted]. Medical records obtained from Kaiser Permanente indicated Dr. [redacted] treated him on 11/09/2010, and listed his diagnoses as diabetes mellitus type II with peripheral neuropathy, essential hypertension, hyperlipidemia and remote colon cancer

Cause of Death Statement:

On Wednesday, Dr. [redacted], a pathologist with the Riverside County Sheriff-Coroner's Office performed an autopsy examination on this case and determined the cause of death as listed on the face sheet of this report.

Documentation (copies of medical records, photos, etc.)**:**

I took 21-digital color photographs of the body and took no property into custody. For additional information, refer to EMC medical record number [redacted]. Additional information regarding the accident can be found in CHP report number 0220111825963019758. Information regarding the pathologist's findings can be found in the autopsy protocol report. Toxicological test results can be found in the lab report.

Conclusion:

From information obtained from the hospital staff, Officer Garcia and Dr. [redacted], I have classified this death an accident.

Report prepared by: [redacted]

Deputy Coroner, #N3115 ***Date:*** *02/21/2011*

SHERIFF-CORONER

COUNTY OF RIVERSIDE
STANLEY SNIFF, Sheriff-Coroner

SHERIFF-CORONER
PUBLIC ADMINISTRATOR
2011 MAR 15 AM 8:26

[redacted] M.D.
Forensic Pathologist

AUTOPSY PROTOCOL

NAME OF DECEDENT: [redacted] **FILE NUMBER:** [redacted]

FINAL DIAGNOSES:

I. Blunt impact injuries to torso:
   A. Contusions of chest.
   B. Abrasions of abdomen.
   C. Multiple rib fractures.
   D. Pulmonary contusions.
   E. Lacerations of liver.
   F. Right hemothorax.

II. Abrasions of extremities:

III. Hypertensive and arteriosclerotic cardiovascular disease:
   A. Left ventricular hypertrophy.
   B. Coronary atherosclerosis.

IV. Obesity.

V. History of colon cancer:
   A. Status post right hemicolectomy.

CAUSE OF DEATH: **BLUNT IMPACT INJURIES TO TORSO**

"I hereby certify that I, [redacted], M.D., Forensic Pathologist, have performed an autopsy on the body of [redacted] on the 23rd day of February, 2011, commencing at 9:45 a.m., in the mortuary of the Office of the Riverside County Sheriff-Coroner."

External Examination: The body is that of an approximately 6', 294 pound, well developed, obese white man appearing the given age of 64 years. Rigor mortis is fully developed and symmetric. Lividity is posterior, pink and fixed, rising to the posterior axillary line. The torso is cold from refrigeration.

The scalp hair is gray and up to 2" in length. The irides are blue. The conjunctivae have no petechial hemorrhages. The facial hair consists of a 3/4" long mustache and 1" long beard. The teeth are natural and in good repair. The external genitalia are those of an uncircumcised adult man and both testes are descended. In the midline of the abdomen from just below the sternum to just above the pelvis is along, vertically oriented, well-healed linear scar. In the right lower quadrant of the abdomen is a small diagonally oriented, well-healed linear scar. On the lateral aspect of the right upper arm is a monochromatic black tattoo of a cross and the name, ".

CLOTHING: As inventoried.

THERAPY: In the mouth is an endotracheal tube. In the left subclavian region is an intravenous catheter. On the left upper aspect of the chest is a needle thoracostomy catheter. Around the right upper arm is a blood pressurecuff. In the anterior aspect of the left lower leg is an intraosseous catheter. On the torso are two defibrillator pads and six electrocardiogram monitor pads.

INJURIES:

Blunt impact injuries to torso:

1. On the right upper aspect of the chest are multiple faint confluent areas of red and purple cutaneous contusions.

2. In the right lower quadrant of the abdomen are several small to medium size confluent red and brown cutaneous abrasions.

3. The ribs have multiple fractures of all twelve ribs bilaterally including anterior and posterior fractures of most ribs with extensive hemorrhage in the surrounding soft tissue. The fractures are complete and nondisplaced.

4. The lungs have contusions bilaterally involving approximately 50% of the total lung parenchyma.

5. In the right pleural space is an estimated 300 ml of liquid and clotted blood.

6. The liver has capsular lacerations involving approximately 10% of the total hepatic parenchyma.

Blunt impact injuries to extremities:

1. On the posterior aspect of the right forearm and hand are several small red and brown cutaneous abrasions.

2. On the posterior aspect of the left forearm and elbow are multiple small red and brown cutaneous abrasions.

3. On the anterior aspect of the left knee is a medium sized red and brown cutaneous abrasion.

Internal Examination:

HEAD: The galea aponeurotica has no hemorrhages. The vault and the base of the skull have no fractures. No epidural or subdural blood accumulations are identified. The brain weighs 1410 grams. The cranial nerves have no nodules or malformations. The cerebral arteries are intact and patent. The leptomeninges are thin and transparent. The external and cut surfaces of the cerebral hemisphere, brainstem and cerebellum have no hemorrhages or malformations.

NECK: The cervical spine, laryngeal cartilages, hyoid bone and strap muscles of the neck have no hemorrhages or fractures. The upper airways have no foreign material. The tongue has no nodules or contusions.

BODY CAVITIES: The pleural cavities and pericardial sac have no adhesions or fluid accumulations. The peritoneal cavity has numerous adhesions between loops of small and large bowel without gross evidence of obstruction. The pneumothorax test is negative bilaterally. The organs are in their usual anatomic positions and have no unusual odors.

CARDIOVASCULAR: The aorta has atherosclerotic plaque with occasional calcifications involving approximately 20% of the luminal surface. The venae cavae are intact and patent. The pulmonary trunk and arteries have no thromboemboli. The great vessels and the chambers of the heart are under-filled with a small amount of red liquid blood.

The heart weighs 590 grams. The epicardial surface is smooth and glistening. The endocardium is thin and transparent. The coronary arteries arise normally and have a right dominant distribution with 50% narrowing of the mid portion of the left anterior descending coronary artery by atherosclerotic plaque. The valves are thin and pliant. The myocardial cut surface is red-tan without gross evidence of infarction. The chambers of the heart have concentric left ventricular hypertrophy with an average left ventricular thickness of 1.5 cm.

LUNGS: The right lung weighs 690 grams and the left lung weighs 750 grams. The pleural membranes are smooth and intact. The cut surfaces are dark red and aerated. The pulmonary arteries are intact and patent. The bronchi are lined by tan mucosa.

[redacted]

LIVER, GALLBLADDER AND PANCREAS: The liver weighs 2510 grams. The capsule has injury as indicated. The cut surfaces are red-brown without gross evidence of cirrhosis or steatosis. The gallbladder has a thin wall and contains an estimated 15 ml of thin green bile. The pancreas has tan lobulated parenchyma.

HEMIC AND LYMPHATIC: The spleen weighs 260 grams. The capsule is smooth and intact. The cut surfaces are dark red and firm. The lymph nodes are not enlarged. The vertebral marrow is dark red. The palatine tonsils are not enlarged. The thymus is replaced by fat.

GENITOURINARY: The right kidney weighs 290 grams and the left kidney weighs 300 grams. The cortical surfaces are smooth. The cut surfaces are red-tan without cysts or nodules. The ureters have no dilatation. The urinary bladder contains an estimated 20 ml of yellow urine. The testes are descended bilaterally and have tan parenchyma which strings easily. The prostate gland has mild symmetric hypertrophy with a greatest dimension of 6 cm with no evidence of focal nodules, necrosis or hemorrhage. The seminal vesicles are unremarkable.

ENDOCRINE: The pituitary, adrenal and thyroid glands have no nodules or hyperplasia.

DIGESTIVE: The esophagus, stomach and duodenum have no acute or chronic ulcers. The stomach contains an estimated 500 ml of thin brown liquid. The small and large intestines show adhesions as described above and evidence of a right hemicolectomy. The anastomoses are intact.

MUSCULOSKELETAL: The clavicles, sternum, spine, ribs and pelvis have injury as indicated. The musculature is unremarkable.

PHOTOGRAPHY: Photographs are obtained by [redacted]

[redacted] M.D.
Forensic Pathologist

3/14/11
Date

[redacted]

BIO-TOX LABORATORIES

Laboratory Director [redacted] Ph.D.
Technical Director [redacted] C.L.S.
Toxicologist [redacted] C.T.S.

RIVERSIDE CORONER
800 S. REDLANDS
PERRIS, CA 92570

[redacted]

PATIENT NAME	SEX	DATE OF DEATH
[redacted]	M	02/20/11

BTL NUMBER	REQUESTING AGENCY	REQUESTED BY	AGENCY NUMBER
[redacted]	7400	[redacted]	[redacted]

SPECIMEN	DATE COLLECTED	TIME TAKEN	DATE RECEIVED	DATE REPORTED
PERIP BL	02/22/11	12:43	02/28/11	03/04/11

EXPANDED IMMUNOASSAY DRUG SCREEN
BLOOD SCREENED FOR:
AMPHETAMINES (AMPHETAMINE, METHAMPHETAMINE), BENZODIAZEPINES, CANNABINOIDS, COCAINE AND OR METABOLITE, OPIATES (MORPHINE/CODEINE), PHENCYCLIDINE (PCP), BARBITURATES AND ALCOHOL.

TEST	RESULTS
ALCOHOL, ETHYL BLOOD	0.00% (W/V)
CORONER PANEL, BLOOD	NONE DETECTED

ANALYSIS BY: [redacted]

SHERIFF-CORONER
PUBLIC ADMINISTRATOR
2011 MAR -8 PM 1:59

IDI #: 130311HCC3498
Exhibit #: 5

Utility Vehicle Data Record Sheet

Front

A Driver	D Right Front Passenger
Left Rear Passenger	Right Rear Passenger
Cargo Bed	

Rear

The Utility Vehicle

A:		
Age: 64	Height: 72 inches	
Gender: male	Weight: 294 lbs	
Helmet (Y/N): N	Seatbelt (Y/N): N	
Killed/Injured/Neither/Unknown: killed		
Injury Description: torso injuries		
Did vehicle land on victim: Yes		
Ejected (Either partially or fully): Ejected		

B:		
Age:	Height:	
Gender:	Weight:	
Helmet (Y/N):	Seatbelt (Y/N):	
Killed/Injured/Neither/Unknown:		
Injury Description:		
Did vehicle land on victim:		
Ejected (Either partially or fully):		

C:		
Age:	Height:	
Gender:	Weight:	
Helmet (Y/N):	Seatbelt (Y/N):	
Killed/Injured/Neither/Unknown:		
Injury Description:		
Did vehicle land on victim:		
Ejected (Either partially or fully):		

D:		
Age: 51	Height: unk.	
Gender: male	Weight: unk.	
Helmet (Y/N): N	Seatbelt (Y/N): N	
Killed/Injured/Neither/Unknown: Injured		
Injury Description: head pain		
Did vehicle land on victim: No		
Ejected (Either partially or fully): Ejected		

E:		
Age:	Height:	
Gender:	Weight:	
Helmet (Y/N):	Seatbelt (Y/N):	
Killed/Injured/Neither/Unknown:		
Injury Description:		
Did vehicle land on victim:		
Ejected (Either partially or fully):		

F:		
Age:	Height:	
Gender:	Weight:	
Helmet (Y/N):	Seatbelt (Y/N):	
Killed/Injured/Neither/Unknown:		
Injury Description:		
Did vehicle land on victim:		
Ejected (Either partially or fully):		

*If victim(s) were injured/killed, please include the other relevant information requested in the assignment message in the text of the IDI

Using the figure on the left, please fill in where the occupants were in the vehicle at the time of the incident using A, B, C, etc. to identify the occupant(s)' location. Fill in the occupants' characteristics in the corresponding location on the right. For example, the driver could be assigned to the letter 'A' and the letter 'A' would be placed in the diagram in the box designated 'Driver', and the drivers' characteristics would be filled on the right. If there were more than six occupants (or more room is needed), please add the other passenger(s)' information (or any other information) as needed. If information is not available, please indicate by 'na'.

Note: Not all locations indicated on the diagram exist in all types of utility vehicles. Please only use the locations that correspond to the incident vehicle. Please place an 'X' over the area if the vehicle was not equipped with the component.

Save

Task Number 130311HCC3498

INTERVIEWER: When the response to a particular question is unknown, please leave blank.

Type of respondent: P - Police Department

Other, specify:

1. What type of vehicle was involved in the incident? (If vehicle is not an ATV, or if ATV has more than 4 wheels, politely thank respondent for her/his cooperation and terminate interview).

1 - 3 wheeled ATV
2 - 4 wheeled ATV
3 - ATV with unknown number of wheels
4 - 2 wheeled motorcycle
5 - Dune Buggy
6 - ATV with more than 4 wheels
✔7 - Utility Vehicle
8 - Other Vehicle
0 - Unknown

2. What is the manufacturer/brand name of the ATV(s) involved in the incident? If more than two ATVs, use an additional sheet.

ATV #1	ATV #2
Manufacturer: 05 - Polaris	**Manufacturer:**

3. What is the model name or number and/or vehicle identification number (VIN) of the ATV?

Model: POLARIS RANGER XP900 / **VIN:** [redacted]

4. What is the model year of the ATV? (Record last two digits of model year. For example 89,90).

Model Year: 2011

5. What is the engine size (in CCs) of the ATV?

Engine Size: 20 - 875-900

6. Was there more than one death involved in this incident? If more than two individuals were killed use an additional sheet.

	Death #1	Death #2
Date of Death:	02/20/2011	
Age/Sex:	64 / 1 - Male	/
State of Death:	CA - CALIFORNIA	
City of Death:	NORTH SHORE	
County of Death:	RIVERSIDE	
Race:	1 - White	
Race Other:		
Hispanic/Latino:	0 - UNSURE/UNKNOWN/NC	

7. Was the victim wearing a helmet at the time the incident occurred?

Death #1	Death #2
Yes ✔No Unknown	Yes No Unknown

Task Number: 130311HCC3498

8. Describe how the incident occurred. (Use additional sheets if necessary).

A 64 year old man was driving an off-road vehicle (UTV) in the open desert while a friend sat in the front passenger seat. They were not wearing helmets nor did they use the safety harnesses that were attached to each of the front seats. The vehicle was initially traveling at about 40 miles per hour then slowed down to about 20 miles per hour as the driver made a left turn. During this turn the driver suddenly speeded up. The passenger was ejected from the vehicle as the vehicle began to roll/turn over. The driver ended up under the turned over vehicle. Local officials were contacted and the driver was transported to a hospital where he died.

9. Did the ATV overturn/tipover/rollover? 01 - Yes

10. If ATV overturned/tipped over/rolled over, did it land on the victim?

Victim 1:			**Victim 2:**		
✔Yes	No	Unknown	Yes	✔No	Unknown

11. Who was killed in the incident? Check all that apply.

✔1 - Driver 3 - Bystander 8 - Other
2 - Passenger 4 - Driver/Other Vehicle

12. How many riders (including the driver) were on the ATV at the time the incident occurred?

0 - Unknown ✔2 - Two riders 4 - Four or more riders
1 - One rider 3 - Three riders

13. List the following physical characteristics of the DRIVER of the ATV:

Age: 64 **Height:** 72 **(inches)**
Weight: 06 - 250+ **Sex:** 01 - Male

14. How did the driver learn to operate an ATV (READ LIST)

1 - Organized Program **Sponsor's Name:**
2 - Dealer/Salesperson **Arranged through dealer:**
3 - Friend/Relative **Friend/Relative Age:**
4 - Self
5 - Other (Specify)
✔9 - Don't Know

15. What was the type of terrain (ground surface) being travelled at the time the incident occurred?

02 - Dessert

16. Type of road being travelled by ATV when incident occurred?

09 - Not Applicable (Not a road)

17. Identify any other motor vehicle(s) involved in this incident.

09 - Not Applicable (not traffic accident)

18. Had the driver of the ATV used alcohol just prior to the incident?

2 - No

19. Had the driver taken any drugs or medication just prior to the incident?

2 - No

Additional Comments:

Coroner listed the cause of death as blunt impact to the torso.

1. Task Number	2. Investigator's ID	EPIDEMIOLOGIC INVESTIGATION REPORT
130312HCC2492	2251	

3. Office Code	4. Date of Accident YR MO DAY	5. Date Initiated YR MO DAY
840	2013 01 19	2013 03 19

6. Synopsis of Accident or Complaint UPC

A 78 year old male died as a result of an 4 wheeled All Terrain Vehicle (ATV) accident when the ATV he was driving collided with the back of a stopped farm tractor. The victim was thrown forward impaling his face on the bale spike affixed to the three point hitch of the tractor. The victim was transported to a local hospital where he was pronounced. The owner of the ATV informed the police that the ATV had a mechanical issue with the transmission belt slipping which may have caused the victim to use too much throttle. The victim was not wearing a helmet at the time of the incident.

MFR/PRVLBR NOTIFIED
COMMENTS: ✓ YES ___ NO
___ OVERRULED: ___ ATTACHED
JB 5/30/14 ✓ EXCISIONS/FOIA EXS. 6, 3, 25C
___ DO NOT RE-NOTIFY ✓ RE-NOTIF

7. Location (Home, School, etc)	8. City	9. State
2 - FARM	CRAWFORD COUNTY	MO

10A. First Product	10B. Trade/Brand Name	10C. Model Number
3286 - ALL TERRAIN VEHICLES	POLARIS SPORTSMAN	500 EFI

10D. Manufacturer Name and Address
POLARIS INDUSTRIES VIN: 4XAMH50A87A217548
1225 NORTH COUNTY ROAD 18
MINNEAPOLIS, MN

11A. Second Product	11B. Trade/Brand Name	11C. Model Number
0	NONE	NONE

11D. Manufacturer Name and Address
NONE

12A. Hispanic or Latino	12B. Race	12C. Race Source
2 - No	1 - White Other:	3 - Official Document

13. Age of Victim	14. Sex	15. Disposition	16. Injury Diagnosis
78	1 - Male	8 - Death	63 - Puncture

17. Body Part(s) Involved	18. Respondent	19. Type of Investigation	20. Time Spent (Operational / Travel)
76 - FACE	3 - 2nd Hand Info Only	2 - Telephone	5.00 / 0.00

21. Attachment(s)	22. Case Source	23. Sample Collection Number
9 - Multiple Attachments	05 - Newspaper	

24. Permission to Disclose Name (Non NEISS Cases Only)

○ Yes ◉ No ○ Yes for Manuf. Only ○ Verbal ○ Written

25. Review Date	26. Reviewed By	27. Regional Office Director
04/04/2013	8929	Frank J. Nava

28. Distribution	29. Source Document Number
John C. Topping; Sarah Garland	X1310953A

1. Task Number	2. Investigator's ID	EPIDEMIOLOGIC INVESTIGATION REPORT
130312HCC2492	2251	

3. Office Code	4. Date of Accident YR MO DAY	5. Date Initiated YR MO DAY
840	2013 01 19	2013 03 19

6. Synopsis of Accident or Complaint **UPC**

A 78 year old male died as a result of an 4 wheeled All Terrain Vehicle (ATV) accident when the ATV he was driving collided with the back of a stopped farm tractor. The victim was thrown forward impaling his face on the bale spike affixed to the three point hitch of the tractor. The victim was transported to a local hospital where he was pronounced. The owner of the ATV informed the police that the ATV had a mechanical issue with the transmission belt slipping which may have caused the victim to use too much throttle. The victim was not wearing a helmet at the time of the incident.

7. Location (Home, School, etc)	8. City	9. State
2 - FARM	CRAWFORD COUNTY	MO

10A. First Product	10B. Trade/Brand Name	10C. Model Number
3286 - ALL TERRAIN VEHICLES	POLARIS SPORTSMAN	500 EFI

10D. Manufacturer Name and Address

POLARIS INDUSTRIES VIN: 4XAMH50A87A217548
1225 NORTH COUNTY ROAD 18
MINNEAPOLIS, MN

11A. Second Product	11B. Trade/Brand Name	11C. Model Number
0	NONE	NONE

11D. Manufacturer Name and Address

NONE

12A. Hispanic or Latino	12B. Race	12C. Race Source
2 - No	1 - White Other:	3 - Official Document

13. Age of Victim	14. Sex	15. Disposition	16. Injury Diagnosis
78	1 - Male	8 - Death	63 - Puncture

17. Body Part(s) Involved	18. Respondent	19. Type of Investigation	20. Time Spent (Operational / Travel)
76 - FACE	3 - 2nd Hand Info Only	2 - Telephone	5.00 / 0.00

21. Attachment(s)	22. Case Source	23. Sample Collection Number
9 - Multiple Attachments	05 - Newspaper	

24. Permission to Disclose Name (Non NEISS Cases Only)

○ Yes ◉ No ○ Yes for Manuf. Only ○ Verbal ○ Written

25. Review Date	26. Reviewed By	27. Regional Office Director
04/04/2013	8929	Frank J. Nava

28. Distribution	29. Source Document Number
John C. Topping; Sarah Garland	X1310953A

ATTACHMENTS:

Exhibit A – Sheriff Incident Report

Exhibit B – Missing Document Report

Contact Information:

Crawford County Sheriff's Office
Contact: Records – Nicole
212 third St.
Steelville, MO 65565
573-775-2125
Contacted: 03/19/2013

Crawford County Coroner
Contact: Paul Hutson – Coroner
P.O. Box 306
Steelville, MO 65565
573-775-4250
Contacted; 03/19/2013, 04/1/2013

Exhibit A – Sheriff Incident Report

Crawford County Sheriff's Office

P.O. Box BE, Steelville, MO 65565

Offense / Incident Report

Report Date	Type of Incident	Complaint No.	Case Status
01/19/2013 1025	ACCIDENT/INJURY/DEATH	2013-0042	CLOSED

Occurred on 01/19/2013 1015 to 01/19/2013 1130

Incident Location

Street Address	City	State	Zip Code
(b)(6)			

Sector	Precinct	Geo	Ward	Latitude	Primary Location
	1				

Neighborhood	Jurisdiction	Longitude	Secondary Location
	CRAWFORD COUNTY		HWY C

Dispatch Information

Received Date / Time	Call Received Via	Dispatched Date / Time	Call Dispatched As
01/19/2013 1025	DISPATCHER	01/19/2013 1026	MED EMER

Arrived Date / Time	Departed Date / Time	Offense Category	TTY Ref.#	TeleType Operator
01/19/2013 1034	01/19/2013 1130			

Officers

ID	Name	Role	Primary	Arrived Scene	Departed Scene
721	WILBANKS, ERIC	REPORTING	☑		

Offenses

Charge / Cause Number	Local Code	Jurisdiction	State Statute / Type/Class	State Charge Code	Category
ACCIDENT/INJURY/DEATH		CRAWFORD COUNTY			

Offense / Incident Narrative

See Accident Report.

Reporting Party / Complainant

Name (Last, First Middle Suffix)	Race	Sex	DOB	Age	Juvenile	SSN	Moniker
(b)(6)				53		[redacted]	

Addresses

Type	Street Address	City	State	Zip Code	Country
	(b)(6)				USA

Phone Numbers

Type	Phone	Ext/PIN
HOME	(573) 732-4739	

Email Addresses

Type	Email Address

Drivers License	Type	State	Expires	Restrictions	Marital Status	Resident Status	Ethnicity	Language
(b)(6)						RESIDENT		

Reporting Party / Complainant

Name (Last, First Middle Suffix)	Race	Sex	DOB	Age	Juvenile	SSN	Moniker
(b)(6)						[redacted]	

Reporting Officer 721 WILBANKS, ERIC

Approving Officer (I) 700 Sheriff Randy Martin
(Cover Pages Only)

Approving Officer (II) 700 Sheriff Randy Martin
(Cover Pages Only)

04/03/2013 10:07AM (GMT-04:00)-

Exhibit A – Sheriff Incident Report

Crawford County Sheriff's Office

P.O. Box BE, Steelville, MO 65565

Offense / Incident Report

Report Date	Type of Incident	Complaint No.	Case Status
01/19/2013 1025	ACCIDENT/INJURY/DEATH	2013-0042	CLOSED

Addresses

Type	Street Address	City	State	Zip Code	Country
	(b)(6)				USA

Phone Numbers

Type	Phone	Ext/PIN
HOME	(b)(6)	

Email Addresses

Type	Email Address

Drivers License	Type	State	Expires	Restrictions	Marital Status	Resident Status	Ethnicity	Language
(b)(6)						RESIDENT		

Victim / Person

Name (Last, First Middle Suffix)	Race	Sex	DOB	Age	Juvenile	SSN	Moniker
(b)(3):CPSA Section 25(c) (b)(6)						[redacted]	

☑ Injured	Medical Care Sought	Treatment Location	Treatment Disposition	☐ Willing to Prosecute	Relation to Suspect
	Y	HOSPITAL			

Other Injury

Injuries

- ☑ LOSS OF TEETH
- ☑ OTHER MAJOR INJ
- ☑ SEVERE LACERATION
- ☑ UNCONSCIOUSNESS

Addresses

Type	Street Address	City	State	Zip Code	Country
	(b)(6)				USA

Drivers License	Type	State	Expires	Restrictions	Marital Status	Resident Status	Ethnicity	Language
(b)(6)		MO				RESIDENT		

Physical Description

Height	Weight	Build	Skin Color	Complexion	Eyes	Type of Eyewear
507	140				BROWN	

Hair	Hair Length	Hair Style	Beard	Mustache	Side Burns	Mannerisms

Place of Birth

City	State

Country

Witness

Name (Last, First Middle Suffix)	Race	Sex	DOB	Age	Juvenile	SSN	Moniker
(b)(6)						[redacted]	

Addresses

Type	Street Address	City	State	Zip Code	Country
	(b)(6)				

Reporting Officer	Approving Officer (I)
721 WILBANKS, ERIC	700 Sheriff Randy Martin (Cover Pages Only)
Approving Officer (II)	
700 Sheriff Randy Martin (Cover Pages Only)	

Exhibit A – Sheriff Incident Report

Crawford County Sheriff's Office

P.O. Box BE, Steelville, MO 65565

Offense / Incident Report

Report Date	Type of Incident	Complaint No.	Case Status
01/19/2013 1025	ACCIDENT/INJURY/DEATH	2013-0042	CLOSED

Phone Numbers

Type	Phone	Ext/PIN
HOME	(b)(6)	

Email Addresses

Type	Email Address

Drivers License	Type	State	Expires	Restrictions	Marital Status	Resident Status	Ethnicity	Language
(b)(6)						RESIDENT		

Other Person

Name (Last, First Middle Suffix)	Other Type	Race	Sex	DOB	Age	Juvenile	SSN	Moniker
(b)(3):CPSA	E.R. DOCTOR	W	M					

Addresses

Type	Street Address	City	State	Zip Code	Country
	751 SAPPINGTON BRIDGE RD	SULLIVAN	MO	63080	USA

Phone Numbers

Type	Phone	Ext/PIN
BUSINESS	(b)(6)	

Email Addresses

Type	Email Address

Vehicle

Veh. Year	Make	Model	Veh. Desc.	Veh Style	VIN
2007	POLARIS	ATV			(b)(6)

Tag	Tag Year	Tag Month	Veh Color-Top	Veh Color-Bottom	Veh Type	Veh Value	Veh Status
NONE			GREEN	GREEN		$0.00	

Vehicle Owner

Name	Phone	Ext.	EMail
(b)(3):CPSA Section 25(c) (b)(			

Street No.	Dir	Street/Rt	Apt/Suite	City	St.	Zip
2413		ARGO RD		BOURBON	MO	65441

Location Information ☐ Stolen ☐ Impounded ☐ Towed ☐ Recovered ☐ Recovered Non-Locally

Vehicle

Veh. Year	Make	Model	Veh. Desc.	Veh Style	VIN
	CASE IH	CX90			UNK

Tag	Tag Year	Tag Month	Veh Color-Top	Veh Color-Bottom	Veh Type	Veh Value	Veh Status
NONE			RED	RED		$0.00	

Vehicle Owner

Name	Phone	Ext.	EMail
(b)(3):CPSA Section 25(c) (b)(			

Street No.	Dir	Street/Rt	Apt/Suite	City	St.	Zip
2413		ARGO RD		BOURBON	MO	65441

Location Information ☐ Stolen ☐ Impounded ☐ Towed ☐ Recovered ☐ Recovered Non-Locally

Images

Reporting Officer 721 WILBANKS, ERIC	Approving Officer (I) 700 Sheriff Randy Martin (Cover Pages Only)
Approving Officer (II) 700 Sheriff Randy Martin (Cover Pages Only)	

04/03/2013 10:07AM (GMT-04:00)

Exhibit A – Sheriff Incident Report

MISSOURI UNIFORM CRASH REPORT PAGE 1 OF 6

1 - GENERAL CRASH INFORMATION

SPACE USED FOR BARCODE

AGENCY NAME AND ORI: Crawford County Sheriff's Office MO0280000

LEFT THE SCENE	DRIVER NO.	CLEARED	CRASH CLASSIFICATION	PROPERTY DAMAGE ONLY	NO. INJURED	NO. KILLED	REPORT / CASE / INCIDENT NUMBER
■ Yes ☐ No	1 2	■ Yes ☐ No		☐	1	1	2013-0042

NO. VEH. INV.	CRASH DATE	CRASH TIME (MIL.)	NOTIFIED DATE	TIME NOTIFIED (MIL.)	INVESTIGATION DATE	TIME ARRIVED (MIL.)	INVEST. AT SCENE
2	01/19/2013	1015	01/19/2013	1026	01/19/2013	1034	☐ Yes ■ No

CRASH TYPE — ROADWAY: ■ On Roadway ☐ Off Roadway

NON-COLLISION: ☐ Overturning ☐ Fire / Explosion ☐ Immersion ☐ Jackknife ☐ Fell / Jumped From MV ☐ Cargo / Equip Loss / Shift ☐ Other Non-Collision

COLLISION INVOLVING: ☐ Animal ☐ Pedalcycle ☐ Fixed Object ☐ Other Object ☐ Pedestrian ☐ Railway Vehicle ☐ Animal Drawn Veh. / Animal Ridden Trans. ☐ Motor Vehicle in Transport → ☐ Parked Motor Vehicle → ■ Working Motor Vehicle →

DIRECTIONAL ANALYSIS FOR IMPACT WITH MOTOR VEHICL: ☐ Front to Front ■ Front to Rear ☐ Rear to Rear ☐ Rear to Side ☐ Angle ☐ Sideswipe (Same Dir.) ☐ Sideswipe (Opp. Dir.) ☐ Falling / Shifting Cargo (Set in motion by MV) ☐ Other (Explain) ☐ Unknown (Explain)

COMMERCIAL MOTOR VEHICLE INVOLVEMENT CRITERIA - Answer the following to determine if the "Commercial Vehicle" fields in Section 7G must be completed.

1. Does this crash involve any of the following?
   - 1a. A person fatally injured; OR
   - 1b. A person transported for medical attention; OR
   - 1c. A vehicle towed due to disabling damage.

   ☐ No - No commercial vehicle fields need completion. ■ Yes - Go to number 2. →

2. Examine each vehicle to determine if it is a commercial vehicle based upon the following:
   - 2a. A truck / cargo van with GVWR / GCVWR of more than 10,000 lbs; OR
   - 2b. A motor vehicle with seating for 9 or more including driver; OR
   - 2c. A vehicle with a hazardous materials placard.

   ☐ No - No commercial vehicle field need completion. ☐ Yes - Complete Section 7G for appropriate vehicle.

EVIDENTIARY PHOTOS TAKEN	BY WHOM	AVAILABLE FROM
■ Yes ☐ No	E. WILBANKS/ 721	■ Investigating Agency
RECONSTRUCTION ☐ Yes ■ No	BY WHOM	AVAILABLE FROM ☐ Investigating Agency

2 - LOCATION

COUNTY	MUNICIPALITY	BEAT / ZONE	TRP/DIST/PCT	GPS COORDINATES (DD:MM:SS.S FORMAT)
CRAWFORD COUNTY	N/A	N/A	I	LAT: 038°10'44.0" LONG: 091°19'55.8"

ON	RDWY. DIR.	DISTANCE FROM	LOCATION	INTERSECTING	SPEED LIMIT	INT. DIR.	GEO. CODE
ARGO RD	W	☐ NA 170 Feet ___ Miles	☐ After ■ Before ☐ At ☐ NA	2053 ARGO ROAD	N/A	S	

SPEED LIMIT: 30 — ROAD MAINTAINED BY: ☐ Unknown ☐ State ■ County ☐ Municipal ☐ Private Property ☐ Other

TRAFFICWAY: ☐ One-Way ■ Two-Way; Not Divided ☐ Two-Way; Divided; Unprotected Median ☐ Other ☐ Two-Way; Not Divided; Continuous Center Turn Lane ☐ Two-Way; Divided; Positive Median Barrier ☐ Unknown

ROAD ALIGNMENT: ■ Straight ☐ Curve ☐ Unknown (Explain)

ROAD PROFILE: ■ Level ☐ Downhill ☐ Dip ☐ Uphill ☐ Hillcrest ☐ Unknown (Expla

INTERSECTION TYPE: ■ NA ☐ 4-Way Intersection ☐ Y-Intersection ☐ 5-way / More ☐ Unknown (Explain) ☐ T-Intersection ☐ Roundabout ☐ Other (Explain)

ROAD CONDITION: ☐ Dry ☐ Snow ☐ Slush ☐ Standing Water ■ Sand / Gravel ☐ Unknown (Explain ☐ Wet ☐ Ice / Frost ☐ Mud / Dirt ☐ Moving Water ☐ Other (Explain)

ROAD SURFACE: ☐ Concrete ☐ Brick ☐ Dirt / Sand ☐ Cobblestone ☐ Asphalt ■ Gravel ☐ Multi-Surface ☐ Unknown (Explain)

WEATHER CONDITION: ■ Clear ☐ Rain ☐ Sleet / Hail ☐ Fog / Mist ☐ Other (Explain) ☐ Cloudy ☐ Snow ☐ Freezing (Temp) ☐ Severe Crosswind ☐ Unknown (Explain)

LIGHT CONDITION: ☐ Daylight ☐ Dark-Lighted ☐ Dark-Unlighted ☐ Dark-Unknown Lighting ☐ Other (Explain) ☐ Unknown (Explain)

3 - DAMAGE TO PROPERTY OTHER THAN VEHICLES ☐ None

LIST OWNER'S NAME & ADDRESS, DESCRIPTION OF PROPERTY, AND DAMAGE. ☐ MoDOT ☐ County ☐ Municipality

4 - WITNESS ☐ None Identified ☐ Additional Witnesses in Narrative

NAME	ADDRESS (Street, City, State, Zip)	PHONE NUMBER
(b)(3):CPSA Section 25(c) (b)(6)		

5 - PEDESTRIAN ■ NA ☐ Law Enforcement Officer ☐ Other Emergency Services Personnel ☐ MoDOT Worker ☐ Other Trafficway Worker ☐ Other Pedestrian

NO.	NAME (Last, First, MI) & ADDRESS (Street, City, State, Zip)	PHONE NUMBER

DATE OF BIRTH	SEX	STRUCK BY VEH #	INJ	TRANSPORT	SAFETY DEVICES	LOCATION
						☐ On Roadway ☐ On Sidewalk ☐ In Driveway Access ☐ Off Roadway ☐ On Median / Crossing Island ☐ Unknown

CROSSING ROAD: ☐ NA ☐ With Signal ☐ Against Signal ☐ No Signal ☐ Unknown ☐ Not At Crosswalk ☐ In Marked Crosswalk ☐ In Unmarked Crosswalk ☐ Unknown

OTHER ACTIONS: ☐ NA / None ☐ Getting On / Off Vehicle ☐ Standing / Lying / Sitting In Trafficway ☐ Pushing / Working On Vehicle ☐ Behind / In Front of Parked / Stopped Veh. ☐ Working In Trafficway ☐ Playing In Trafficway ☐ Walking / Running In Trafficway ☐ With Traffic ☐ Against Traffic ☐ Unknown ☐ Other (Explain)

SCHOOL INFO. ☐ NA ☐ Going To / From School ☐ Getting On / Off School Bus ☐ Both Of The Above ☐ Unknown (Explain)

PROBABLE CONTRIBUTING CIRCUMSTANCES ☐ None ☐ Failed To Yield ☐ Distracted / Inattentive ☐ Alcohol ☐ Drugs ☐ Vision Obstructed (Explain) ☐ Physical Impairment (Explain) ☐ Other (Explain) ☐ Unknown (Explain)

DISTRACTION / INATTENTION CODE(S) ☐ NA

ALCOHOL USE ☐ Yes ☐ No ☐ Unknow

DISTRIBUTION: COPY - AGENCY FILE ORIGINAL - MISSOURI STATE HIGHWAY PATROL - TRAFFIC RECORDS DIVISION - P.O. BOX 568 - JEFFERSON CITY, MO 65102 SHP-20 01

04/03/2013 10:07AM (GMT-04:00)

Exhibit A – Sheriff Incident Report

REPORT # 2013-0042 PAGE 2 OF 6

6. COLLISION DIAGRAM	Compass Direction Before Crash Event(s) (Circle One)	V1 N E S W U	V2 N E S W U	N E S W U	N E S W U	N E S W U	N E S W U

INDICATE NORTH

INDICATE ROAD NAMES

DIAGRAM NOT TO SCALE

04/03/2013 10:07AM (GMT-04:00)

Exhibit A – Sheriff Incident Report

REPORT # 2013-0042 PAGE 3 OF 6

7 - DRIVERS, VEHICLES, OWNERS, & OCCUPANTS

NO. 1 | 7A. DRIVER - NAME (Last, First, MI) & ADDRESS (Street, City, State, Zip): (b)(3):CPSA Section 25(c) (b)(6) | PHONE NUMBER

DRIVER LICENSE / ID NUMBER: (b)(6) | STATE: MO | LIC STATUS: ■ Valid, ☐ Susp / Rev / Denied, ☐ Canceled / Oth Invalid, ☐ Expired, ☐ Disqual CDL, ☐ Unknown, ☐ NA | LIC TYPE: ■ Operator Class F, ☐ CDL Class ____, ☐ Interm / Grad, ☐ Permit, ☐ MC Only, ☐ Unlicensed, ☐ Unknown (Explain) | MC ENDORSEMENT: ☐ Yes ☐ No ■ ☐ Unknown (Explain)

DATE OF BIRTH	SEX	SEAT LOC	INJ	TRANS-PORT	EJEC-TION	AIR BAG	SAFETY DEVICES	VISION OBSTRUCTED
09/07/1934	M	M	1	2	2	1	1 8	■ Not Obstructed, ☐ Windshield, ☐ Load on Veh, ☐ Trees / Brush, ☐ Building, ☐ Embankment, ☐ Sign, ☐ Hillcrest, ☐ Parked Veh, ☐ Moving Veh, ☐ Stopped Veh, ☐ Glare, ☐ Other (Explain), ☐ Unknown (Explain), ☐ NA

PROOF OF INSURANCE: ☐ Yes ☐ No ■ Not Required | INSURANCE COMPANY: ☐ Expired | PHONE NO. (Optional) | POLICY NUMBER: ☐ NA | ☐ Driv ☐ Veh

7B. VEHICLE - OWNER NAME (Last, First, MI) & ADDRESS (Street, City, State, Zip): (b)(3):CPSA Section 25(c) (b)(6) ☐ SAO | PHONE NUMBER ☐ SA

YEAR	MAKE	MODEL	COLOR		VEH. TYPE	TOTAL NO. OF OCC
2007	POLARIS	ATV	GREEN	GREEN	1	1

LICENSE - PLATE NO.: NONE | STATE | YEAR | VIN: (b)(6) | TOWED FROM SCENE: ☐ Yes ■ No | TOWED DUE TO DIS. DAMAG: ☐ Yes ■ No

VEHICLE DAMAGE (Mark all damaged areas): ☐ None / No Damage | INITIAL IMPACT NO.: ☐ NA 2 | TOWED BY: ☐ Unknown ■ NA

VEHICLE BODY TYPES - Automobiles / Specialty Vehicles ☐ Vehicle Used As Public Conveyance

☐ Passenger Car, ☐ Van (< 9 W/Driver), ☐ Passenger Van (9+ W/Driver), ☐ Sport Utility Vehicle, ☐ Limousine (7-8 W/Driver), ☐ Limousine (9-15 W/Driver), ☐ Motorized Bicycle, ☐ Pedalcycle, ☐ To / From School
☐ Small Bus (9-15 W/Driver), ☐ Large Bus (16+ W/Driver) → ☐ School Bus, ☐ Intercity, ☐ Transit / Commuter, ☐ Charter / Tour, ☐ Other
☐ Motorcycle, ■ ATV → ☐ 2 Wh, ☐ 3 Wh, ■ 4 Wh, ☐ 5 Wh / More, ☐ Unknown
☐ Motor Home, ☐ Farm Implements, ☐ Construction Equip. Heavy Mach., ☐ Other Vehicle (Code) ____, ☐ Cargo Van, ☐ Pickup, ☐ Other Heavy Truck, ☐ Unknown (Explain)
☐ Single-unit Truck; 2 axles, 6 tires, ☐ Single-unit Truck; 3 or more axles, ☐ Veh. Pulling Another Unit(s) (Does not apply to Truck Tractors), ☐ Truck Tractor With No Units, ☐ Truck Tractor With One Unit, ☐ Truck Tractor With Two Units, ☐ Truck Tractor With Three Units

GVW / GCVW RATING (Not Licensed Weight) (Pickups, Cargo Vans, All Truck Truck Tractors, or Haz Mat Placard Veh. Only): ☐ Less than or equal to 10,000 lbs., ☐ 10,001 - 26,000 lbs., ☐ Greater than 26,000 lbs., ☐ Unknown

EMERGENCY VEHICLE INVOLVEMENT: ■ NA ☐ Police ☐ Ambulance ☐ Fire ☐ Other (Must check "A" / "B") → ☐ A. Emergency Vehicle on Emergency Run ☐ B. Stationary With Emergency Equip. Activated

CONTRIBUTING TRAFFIC CONDITIONS: ■ NA ☐ Congestion Ahead ☐ Other Incident Ahead ☐ Crash Ahead ☐ Unknown (Explain)

7C. VEHICLE ACTION / SEQUENCE OF EVENTS CODES ☐ Additional Codes Listed in Narrative (See Codes in Section 8)
SEQUENCE OF EVENTS CODES ☐ Unknown: 05 | 34 | ANIMAL CODE(S) | FIXED OBJECT CODE(S) | ALCOHOL USE: ☐ Yes ☐ Unk ☐ No ☐ NA

7D. PROBABLE CONTRIBUTING CIRCUMSTANCES ☐ None

■ Vehicle Defects (Explain), ☐ Speed - Exceeded Limit, ■ Too Fast For Conditions, ☐ Violation Signal / Sign, ☐ Failed To Yield, ☐ Alcohol, ☐ Drugs
☐ Vision Obstructed, ☐ Driver Fatigue / Asleep, ☐ Improper Signal, ☐ Improper Backing, ■ Improper Turn, ☐ Improper Passing, ☐ Improperly Parked
☐ Failed To Dim Headlights, ☐ Failed To Use Lights, ☐ Following Too Close, ☐ Wrong Side (Not Passing), ☐ Wrong Side (One-Way), ☐ Physical Impairment (Explain), ☐ Improper Start From Park
☐ Improper Towing / Pushing, ☐ Improperly Stopped On Roadway, ☐ Improper Lane Usage / Change, ☐ Overcorrected, ☐ Improper Riding / Clinging To Veh. Exterior, ☐ Failed To Secure Load / Improper Loading, ☐ Animal(s) In Roadway
☐ Object / Obstruction In Roadway, ☐ Distracted / Inattentive (Designate Type), ☐ Unknown (Explain), ☐ Other (Explain)
DISTRACTED / INATTENTIVE CODE(S) (See Codes in Section 8) ■ N

7E. WORK ZONE: ☐ Yes ■ No ☐ Unknown | Workers Present: ☐ Yes ■ No ☐ Unknown
TRAFFIC CONTROL: ■ None ☐ Unknown
Electric: ☐ Green/Yellow/Red ☐ Flashing Red ☐ Flashing Yellow ☐ Ramp Meter ☐ Other (Explain)
Other Controls: ☐ Stop Sign ☐ No Passing Zone ☐ Turn Restricted ☐ Officer / Flagman ☐ Signal On School Bus ☐ Warning Sign / Device ☐ Railway Crossing Sign / Device ☐ School Zone ☐ Yield Sign ☐ Other (Explain)
CONTROL MALFUNCTIONING / INOPERATIVE / MISSING: ☐ Yes (Explain) ☐ No ☐ Unknown ■ NA

7F. OCCUPANTS - NAME (Last, First, MI) / ADDRESS (Street, City, State, Zip) | DATE OF BIRTH MM-DD-YYYY | SEX | SEAT LOC | INJ | TRANS-PORT | EJEC-TION | AIR BAG | SAFETY DEVICES | PHONE NUMBER

7G. COMMERCIAL MOTOR VEHICLE ■ NA Required on vehicle if "Yes" was answered to questions in parts 1 and 2 in CMV involvement criteria and vehicle meets one of the three criteria in part 3

MOTOR CARRIER IDENTIFICATION (Lessee, etc.) - NAME & ADDRESS (Street, City, State, Zip) ☐ SAO | PHONE NUMBER ☐ SA

COMMERCIAL / NON-COMMERCIAL: ☐ Interstate Carrier ☐ Intrastate Carrier ☐ Not In Commerce - Government Vehicle ☐ Not In Commerce - Rental Vehicle ☐ Not In Commerce - Other Vehicle | MC / MX / ICC NO. | USDOT NO.

CARGO BODY TYPE: ☐ Enclosed Box ☐ Cargo Tank ☐ Flatbed ☐ Dump ☐ Concrete Mixer ☐ Auto Transporter ☐ Garbage / Refuse ☐ Grain / Chip / Gravel ☐ Pole Trailer ☐ Log ☐ Vehicle Towing Another Veh. ☐ Intermodal Container Chassis ☐ NA (No Cargo Body) ☐ Other ☐ Unknown

HAZARDOUS MATERIALS: PLACARD DISPLAYED ☐ Yes ☐ No ☐ Unknown | 4-DIGIT NO. | CLASS | HM CARGO PRESENT ☐ Yes ☐ No ☐ Unknown | HM CARGO RELEASED ☐ Yes ☐ No ☐ Unknown | HAZARDOUS MATERIAL NAME

04/03/2013 10:07AM (GMT-04:00)

Exhibit A – Sheriff Incident Report

REPORT # 2013-0042 PAGE 4 OF 6

7 - DRIVERS, VEHICLES, OWNERS, & OCCUPANTS

NO. 2 | 7A. DRIVER - NAME (Last, First, MI) & ADDRESS (Street, City, State, Zip) | PHONE NUMBER

(b)(3):CPSA Section 25(c),(b)(6)

DRIVER LICENSE / ID NUMBER: (b)(6) | STATE: MO | LIC STATUS: ■ Valid, ☐ Susp / Rev / Denied, ☐ Cancelled / Oth Invalid, ☐ Expired, ☐ Disqual CDL, ☐ Unknown, ☐ NA | LIC TYPE: ■ Operator Class F, ☐ CDL Class ___, ☐ Interm / Grad, ☐ Permit, ☐ MC Only, ☐ Unlicensed, ☐ Unknown (Explain), ☐ NA | MC ENDORSEMENT: ☐ Yes ☐ No ■ Unknown (Explain)

DATE OF BIRTH	SEX	SEAT LOC	INJ	TRANSPORT	EJECTION	AIR BAG	SAFETY DEVICES	VISION OBSTRUCTED
07/12/1960	M	OE	5	1	2	1	U N	■ NA

VISION OBSTRUCTED: ☐ Not Obstructed, ☐ Windshield, ☐ Load on Veh, ☐ Trees / Brush, ☐ Building, ☐ Embankment, ☐ Sign, ☐ Hillcrest, ☐ Parked Veh, ☐ Moving Veh, ☐ Stopped Veh, ☐ Glare, ☐ Other (Explain), ☐ Unknown (Explain)

PROOF OF INSURANCE: ☐ Yes ☐ No ■ Not Required | INSURANCE COMPANY: ☐ Expired | PHONE NO. (Optional) | POLICY NUMBER: ☐ NA | ☐ Driv ☐ Veh

7B. VEHICLE - OWNER NAME (Last, First, MI) & ADDRESS (Street, City, State, Zip): ■ SAO | PHONE NUMBER ☐ SA

YEAR	MAKE	MODEL	COLOR		VEH. TYPE	TOTAL NO. OF OCC.
	CASE IH	CX90	RED	RED	1	1

LICENSE - PLATE NO.: NONE | STATE | YEAR | VIN: UNK | TOWED FROM SCENE: ☐ Yes ■ No | TOWED DUE TO DIS. DAMAG: ☐ Yes ☐ No

VEHICLE DAMAGE (Mark all damaged areas): ■ None / No Damage

INITIAL IMPACT NO: ☐ NA 8

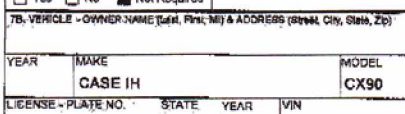

18 - Undercarriage, 19 - Windshield, 20 - Burned, 21 - Towed Unit, 22 - Cargo, 23 - Unknown, 24 - Other (Explain)

TOWED BY: ☐ Unknown ■ NA

VEHICLE BODY TYPES - Automobiles / Specialty Vehicles | ☐ Vehicle Used As Public Conveyance

☐ Passenger Car, ☐ Van (< 9 W/Driver), ☐ Passenger Van (9+ W/Driver), ☐ Sport Utility Vehicle, ☐ Limousine (7-8 W/Driver), ☐ Limousine (9-15 W/Driver), ☐ Motorized Bicycle, ☐ Pedalcycle, ☐ To / From School

☐ Small Bus (9-15 W/Driver), ☐ Large Bus (16+ W/Driver) → ☐ School Bus, ☐ Intercity, ☐ Transit / Commuter, ☐ Charter / Tour, ☐ Other

☐ Motorcycle, ☐ ATV → ☐ 2 Wh, ☐ 3 Wh, ☐ 4 Wh, ☐ 5 Wh / More, ☐ Unknown

☐ Motor Home, ■ Farm Implements, ☐ Construction Equip. Heavy Mach., ☐ Other Vehicle (Code) ___, ☐ Cargo Van, ☐ Pickup, ☐ Other Heavy Truck, ☐ Unknown (Explain)

☐ Single-unit Truck; 2 axles, 6 tires, ☐ Single-unit Truck; 3 or more axles, ☐ Veh. Pulling Another Unit(s) (Does not apply to Truck Tractors), ☐ Truck Tractor With No Units, ☐ Truck Tractor With One Unit, ☐ Truck Tractor With Two Units, ☐ Truck Tractor With Three Units

GVW / GCVW RATING (Not Licensed Weight) (Pickups, Cargo Vans, All Truck Truck Tractors, or Haz Mat Placard Veh. Only): ☐ Less than or equal to 10,000 lbs., ☐ 10,001 - 26,000 lbs., ☐ Greater than 26,000 lbs., ☐ Unknown

EMERGENCY VEHICLE INVOLVEMENT: ■ NA | ☐ Police, ☐ Fire, ☐ Ambulance, ☐ Other (Must check "A" / "B") → ☐ A. Emergency Vehicle on Emergency Run, ☐ B. Stationary With Emergency Equip. Activated

CONTRIBUTING TRAFFIC CONDITIONS: ■ NA | ☐ Congestion Ahead, ☐ Crash Ahead, ☐ Other Incident Ahead, ☐ Unknown (Explain)

7C. VEHICLE ACTION / SEQUENCE OF EVENTS CODES | ☐ Additional Codes Listed In Narrative (See Codes in Section 8)

SEQUENCE OF EVENTS CODES: ☐ Unknown | 13 | 34 | ANIMAL CODE(S) | FIXED OBJECT CODE(S) | ALCOHOL USE: ☐ Yes ☐ Unk ■ No ☐ NA

7D. PROBABLE CONTRIBUTING CIRCUMSTANCES | ☐ None

☐ Vehicle Defects (Explain), ☐ Speed - Exceeded Limit, ☐ Too Fast For Conditions, ☐ Violation Signal / Sign, ☐ Failed To Yield, ☐ Alcohol, ☐ Drugs

☐ Vision Obstructed, ☐ Driver Fatigue / Asleep, ☐ Improper Signal, ☐ Improper Backing, ☐ Improper Turn, ☐ Improper Passing, ☐ Improperly Parked

☐ Failed To Dim Headlights, ☐ Failed To Use Lights, ☐ Following Too Close, ☐ Wrong Side (Not Passing), ☐ Wrong Side (One-Way), ☐ Physical Impairment (Explain), ☐ Improper Start From Park

☐ Improper Towing / Pushing, ■ Improperly Stopped On Roadway, ☐ Improper Lane Usage / Change, ☐ Overcorrected, ☐ Improper Riding / Clinging To Veh. Exterior, ☐ Failed To Secure Load / Improper Loading, ☐ Animal(s) In Roadway

☐ Object / Obstruction In Roadway, ☐ Distracted / Inattentive (Designate Type), ☐ Unknown (Explain), ☐ Other (Explain)

DISTRACTED / INATTENTIVE CODE(S) ■ (See Codes in Section 8)

7E. WORK ZONE: ☐ Yes ■ No ☐ Unknown | Workers Present: ☐ Yes ■ No ☐ Unknown

TRAFFIC CONTROL: ■ None ☐ Unknown | Electric: ☐ Green/Yellow/Red, ☐ Flashing Red, ☐ Flashing Yellow, ☐ Ramp Meter, ☐ Other (Explain) | Other Controls: ☐ Stop Sign, ☐ No Passing Zone, ☐ Turn Restricted, ☐ Officer / Flagman, ☐ Signal On School Bus, ☐ Warning Sign / Device, ☐ Railway Crossing Sign / Device, ☐ School Zone, ☐ Yield Sign, ☐ Other (Explain)

CONTROL MALFUNCTIONING / INOPERATIVE / MISSING: ☐ Yes (Explain) ☐ No ☐ Unknown ■ NA

7F. OCCUPANTS - NAME (Last, First, MI) / ADDRESS (Street, City, State, Zip)	DATE OF BIRTH MM-DD-YYYY	SEX	SEAT LOC	INJ	TRANSPORT	EJECTION	AIR BAG	SAFETY DEVICES	PHONE NUMBER

7G. COMMERCIAL MOTOR VEHICLE ■ NA | Required on vehicle if "Yes" was answered to questions in parts 1 and 2 in CMV involvement criteria and vehicle meets one of the three criteria in part 3

MOTOR CARRIER IDENTIFICATION (Lessee, etc.) - NAME & ADDRESS (Street, City, State, Zip) ☐ SAO | PHONE NUMBER ☐ SA

COMMERCIAL / NON-COMMERCIAL: ☐ Interstate Carrier, ☐ Intrastate Carrier, ☐ Not In Commerce - Government Vehicle, ☐ Not In Commerce - Rental Vehicle, ☐ Not In Commerce - Other Vehicle | MC / MX / ICC NO. | USDOT NO.

CARGO BODY TYPE: ☐ Enclosed Box, ☐ Cargo Tank, ☐ Flatbed, ☐ Dump, ☐ Concrete Mixer, ☐ Auto Transporter, ☐ Garbage / Refuse, ☐ Grain / Chip / Gravel, ☐ Pole Trailer, ☐ Log, ☐ Vehicle Towing Another Veh., ☐ Intermodal Container Chassis, ☐ NA (No Cargo Body), ☐ Other, ☐ Unknown

HAZARDOUS MATERIALS	PLACARD DISPLAYED	4-DIGIT NO.	CLASS	HM CARGO PRESENT	HM CARGO RELEASED	HAZARDOUS MATERIAL NAME
	☐ Yes ☐ No ☐ Unknown			☐ Yes ☐ No ☐ Unknown	☐ Yes ☐ No ☐ Unknown	

04/03/2013 10:07AM (GMT-04:00)

Exhibit A – Sheriff Incident Report

REPORT # 2013-0042 PAGE 5 OF 6

8 - CODES

SEAT LOCATION
XX - Not Known
B - Pedalcycle
M - Motorcycle
CP - Commercial Passenger
OE - Occupant - Enclosed Load Area
OU - Occupant - Unenclosed Load Area
RC - Rail Crew
SV - Other (Explain in Narrative)
NA - Not Applicable

FR SR TR / FC SC TC / FL SL TL

INJURY
1. Fatal
2. Disabling
3. Evident - Not Disabling
4. Probable - Not Apparent
5. None Apparent
U. Unknown
N. NA

TRANSPORTED (For Medical Treatment)
1. No
2. EMS
3. Other
U. Unknown
N. NA

EJECTION
1. NA
2. No
3. Partially
4. Totally
U. Unknown

AIR BAG
1. None / NA
3. Not Deployed
4. Removed
5. Deployed - Front
6. Deployed - Side
7. Deployed - Curtain
8. Deployed - Other (Knee, Air Belt, etc.)
9. Deployed - Combination
10. Deployment Unknown
U. Air Bag Presence Unknown

SAFETY DEVICES
1. None
2. Not Used
3. Shoulder Belt Only
4. Lap Belt Only
5. Shoulder and Lap Belt
7. DOT Compliant MC Helmet
8. No Helmet
10. Booster Seat
11. Child Restraint - Forward Facing
12. Child Restraint - Rear Facing
13. Other Helmet
14. Reflective Clothing
15. Other
U. Use Unknown
N. Not Applicable

VEHICLE ACTION / SEQUENCE OF EVENTS (Items with double-asterisk [**] require additional coding)
1. Going Straight
2. Overtaking
3. Making Right Turn
4. Right Turn on Red
5. Making Left Turn
6. Making U-Turn
7. Skidding / Sliding
8. Slowing / Stopping
9. Start In Traffic
10. Start From Parked
11. Backing
12. Stopped In Traffic
13. Parked
14. Changing Lanes
15. Avoiding
16. Cross Median
17. Cross Center Of Road
18. Cross Road
19. Airborne
20. Ran Off Roadway - Right
21. Ran Off Roadway - Left
22. Overturn / Rollover
23. Fire / Explosion
24. Immersion
25. Jackknife
26. Cargo Loss / Shift
27. Equipment Failure
28. Separation Of Units
29. Returned To Roadway
30. Collision Inv. Pedestrian
31. Collision Inv. Bicycle/Pedalcycle
32. Collision Inv. Railway Veh.
33. Collision Inv. Animal (**)
34. Collision Inv. MV in Transport
35. Collision Inv. Parked MV
36. Collision Inv. Fixed Object (**)
37. Collision Inv. Other Object (Explain)
38. Other Non-collision
39. Collision Inv. Bicycle/Pedalcycle In Bicycle Lane
40. Collision Inv. Animal Drawn Vehicle / Animal Ridden For Transportation
41. Collision Inv. Working MV
42. Downhill Runaway
43. Fell/Jumped From MV
44. Thrown/Falling Object
45. Struck By Falling, Shifting Cargo, Object Set In Motion By Own MV
46. Ran Off Roadway - Other (Explain)
47. Cross Separator

ANIMAL CODES FOR VEHICLE ACTION / SEQUENCE OF EVENTS
60. Deer
61. Farm Animal
62. Dog
63. Other Animal
U. Unknown

FIXED OBJECT CODES FOR VEHICLE ACTION / SEQUENCE OF EVENTS
20. Tree / Stump (Standing)
21. Embankment / Driveway / Ground / Rock Bluff
22. Guardrail Face
23. Utility Pole
24. Fence
25. Street Light Support
26. Culvert
27. Highway Traffic Sign Post / Support
28. Bridge Pier / Abutment / Support
29. Curb
30. Mail Box
31. Concrete Traffic Barrier
32. Building
33. Traffic Signal Support
34. Impact Attenuator / Crash Cushion
35. Fire Hydrant
36. Other (Explain)
37. Bridge Parapet End
38. Bridge Rail
39. Guardrail End
40. Other Traffic Barrier
41. Overhead Sign Support
42. Ditch
43. Other Post / Pole / Support
44. Wall
45. Cable Barrier
46. Bridge Overhead Structure
47. Overhead Line / Cable
U. Unknown

DISTRACTED / INATTENTIVE CODES
1. External Distraction
2. Passengers
3. Stereo / Audio / Video Equipment
4. Navigation Device
5. Communication Device - Hand-held
6. Communication Device - Hands Free
7. Communication Device - Texting / E-mailing
8. Communication Device - Web Browsing
9. Eating / Drinking
10. Reading
11. Tobacco Use
12. Grooming
13. Computer Equipment / Electronic Games / etc.
14. Adjusting Vehicle Controls
16. Other (Explain)

VEHICLE TYPE CODES
1. Motor Vehicle In Transport
2. Parked Motor Vehicle
3. Working Motor Vehicle
4. Pedalcycle
5. Animal Drawn Vehicle / Animal Ridden For Transport Purposes
U. Unknown

OTHER VEHICLE CODES
1. Riding Mower / Garden Tractor
2. Golf Cart
3. Snowmobile
4. Forklift
5. Animal Drawn Vehicle / Animal Ridden For Transportation
6. Low Speed Vehicle
7. Other (Explain)

9. NARRATIVE / STATEMENTS (If additional room is necessary, use Section 11 - Narrative / Statements Continuation)

On 1/19/13 I responded to (b)(6) in Bourbon for a report of a medical emergency regarding a male patient impaled in the facial area with a farm implement (round bale spike). When I arrived EMS crews were already on scene and working with the patient, (b)(3):CPSA EMS transported (b)(to Missouri Baptist a short time later.

I spoke with (b)(6), who is a son to (b)(6) explained that he and his father were going to cut some firewood near by. He said he took his tractor (V2) and drove westward down Argo Road and (b)(followed driving an ATV (V1). (b) said he stopped at a gate and prepared to access his property. (b) said his ATV had a mechanical issue with a transmission belt slipping. (b) said due to the mechanical issues he believed that when (b)(attempted to turn into the drive (b)(may have given the ATV too much throttle. (b) stated (b)(collided with the back of the tractor, and (b)(face was impaled by the bale spike affixed to the three point hitch of the tractor.

(b)(said he immediately went to render assistance to (b)(6) said when he moved (b)(from the spike (b)(was unconscious, bleeding profusely and seemed to be choking on the blood. (b) said he placed (b)(onto the ATV and returned to his home to call 911. (The distance from the collision and (b)(residence was approximately ½ of a mile.) (b)(wife, (b)(6) called 911. (b) rendered CPR until EMS crews arrived.

After EMS arrived CPR was continued and (b)(was transported to Missouri Baptist Hospital in Sullivan. There (b)(succumbed to the injuries he sustained in the collision.

I later spoke with the Missouri Baptist Emergency Room Doctor that was on duty, (b)(3):CPSA Dr. (b)(stated when (b)(came in for treatment EMS personnel was actively rendering CPR. He said (b)(had "P.E.A." (pulseless electrical activity), which was said to mean (b)(had no pulse and no blood pressure. Dr. (b)(said CPR was continued for a short time longer with no results.

Dr. (b)(stated (b)(succumbed to a fatal head injury. He said it appeared that the farm implement had pierced (b)(6) brain stem.

*** See Continuation Page(s)

10. REPORTING AND REVIEWING OFFICER INFORMATION

REPORTING OFFICER NAME	DSN / BADGE NO.	BEAT / ZONE	GROUP / DISTRICT / PRECINCT
LITTRELL, BRYCE	724	N/A	I

REVIEWING OFFICER NAME	DSN / BADGE NO.	REVIEWING OFFICER 2 NAME	DSN / BADGE NO

04/03/2013 10:07AM (GMT-04:00)

Exhibit A – Sheriff Incident Report

REPORT # 2013-0042 PAGE 6 OF 6

11. NARRATIVE / STATEMENTS CONTINUATION (If additional room is necessary use Narrative / Statements Continuation / Supplement)

Dr. Kunkle added that Robert's injuries were consistent with the description of the collision.

Note: The vehicle's involved in the collision were moved from the scene prior to the investigation. However, there were markings on the ground at the scene which were photographed. The vehicle's were also photographed as a reference. The photographs were added to this report in the Images/Attachments section. I was unable to locate a vehicle identification number on the Case IH tractor.

Deputy E. Wilbanks/ 721

04/03/2013 10:07AM (GMT-04:00)

Exhibit B – Missing Document Report

U.S. Consumer Product Safety Commission

Task Number: 130312HCC2492

Date: 04/03/2013

Status of Missing Document(s)

The official records below were requested for this investigation report, but could not be obtained:

1. CRAWFORD COUNTY CORONER REPORT
2.
3.
4.
5.
6.

Task Number 130312HCC2492

INTERVIEWER: When the response to a particular question is unknown, please leave blank.

Type of respondent:

Other, specify:

1. What type of vehicle was involved in the incident? (If vehicle is not an ATV, or if ATV has more than 4 wheels, politely thank respondent for her/his cooperation and terminate interview).

1 - 3 wheeled ATV
✔2 - 4 wheeled ATV
3 - ATV with unknown number of wheels
4 - 2 wheeled motorcycle
5 - Dune Buggy
6 - ATV with more than 4 wheels
7 - Utility Vehicle
8 - Other Vehicle
0 - Unknown

2. What is the manufacturer/brand name of the ATV(s) involved in the incident? If more than two ATVs, use an additional sheet.

ATV #1	ATV #2
Manufacturer: 05 - Polaris	**Manufacturer:**

3. What is the model name or number and/or vehicle identification number (VIN) of the ATV?

Model: 500 EFI / **VIN:** 4XAMH50A87A217548

4. What is the model year of the ATV? (Record last two digits of model year. For example 89,90).

Model Year: 2007

5. What is the engine size (in CCs) of the ATV?

Engine Size: 12 - 475-500

6. Was there more than one death involved in this incident? If more than two individuals were killed use an additional sheet.

	Death #1	Death #2
Date of Death:	01/19/2013	
Age/Sex:	78 / 1 - Male	78 / 1 - Male
State of Death:	MO - MISSOURI	MO - MISSOURI
City of Death:	BURBON	
County of Death:	CRAWFORD	
Race:	1 - White	
Race Other:		
Hispanic/Latino:	2 - NO	

7. Was the victim wearing a helmet at the time the incident occurred?

Death #1	Death #2
Yes ✔No Unknown	Yes No Unknown

Task Number: 130312HCC2492

8. Describe how the incident occurred. (Use additional sheets if necessary).

A 78 year old male died as a result of an All Terrain Vehicle (ATV) accident when the ATV he was driving collided with the back of a stopped farm tractor. The victim's face was impaled by the bale spike affixed to the three point hitch of the tractor. The victim was transported to a local hospital where he was pronounced. The owner of the ATV informed the police that the ATV had a mechanical issue with the transmission belt slipping which may have caused the victim to use to much throttle. The victim was not wearing a helmet at the time of the incident.

9. Did the ATV overturn/tipover/rollover? 02 - No

10. If ATV overturned/tipped over/rolled over, did it land on the victim?

Victim 1: Yes No Unknown

Victim 2: Yes No Unknown

11. Who was killed in the incident? Check all that apply.

✔1 - Driver
2 - Passenger
3 - Bystander
4 - Driver/Other Vehicle
8 - Other

12. How many riders (including the driver) were on the ATV at the time the incident occurred?

0 - Unknown
✔1 - One rider
2 - Two riders
3 - Three riders
4 - Four or more riders

13. List the following physical characteristics of the DRIVER of the ATV:

Age: 78 **Height:** **(inches)**

Weight: **Sex:** 01 - Male

14. How did the driver learn to operate an ATV (READ LIST)

1 - Organized Program **Sponsor's Name:**
2 - Dealer/Salesperson **Arranged through dealer:**
3 - Friend/Relative **Friend/Relative Age:**
4 - Self
5 - Other (Specify)
✔9 - Don't Know

15. What was the type of terrain (ground surface) being travelled at the time the incident occurred?

09 - Non-Paved Road

16. Type of road being travelled by ATV when incident occurred?

02 - Private Road

17. Identify any other motor vehicle(s) involved in this incident.

08 - Other

18. Had the driver of the ATV used alcohol just prior to the incident?

0 - Unknown

19. Had the driver taken any drugs or medication just prior to the incident?

0 - Unknown

Additional Comments:

1. Task Number	2. Investigator's ID	EPIDEMIOLOGIC INVESTIGATION REPORT
130312HCC2496	9068	

3. Office Code	4. Date of Accident YR MO DAY	5. Date Initiated YR MO DAY
840	2013 01 19	2013 03 14

6. Synopsis of Accident or Complaint **UPC**

A 42 year old male was driving his four wheel UTV with a helmet on a lake covered with ice. He encountered an eight foot span of open water and was unable to glide across to solid ice. The UTV went down into the water and he was unable to get out of his seatbelt and drowned.

MFR/PRVLBR NOTIFIED

COMMENTS: __YES ✓NO
__OVERRULED; __ATTACHED
✓EXCISIONS/FOIA EXS. 6b
✓DO NOT RE-NOTIFY __RE-NOTIFY
1/16/14 lc

7. Location (Home, School, etc)	8. City	9. State
5 - OTHER PUBLIC PROPERTY	CALUMET COUNTY	WI

10A. First Product	10B. Trade/Brand Name	10C. Model Number
5044 - UTILITY VEHICLES	POLARIS	RAZOR

10D. Manufacturer Name and Address
POLARIS INDUSTRIES INC.
2100 HIGHWAY 55
MEDINA, MN 55340

11A. Second Product	11B. Trade/Brand Name	11C. Model Number
0	NONE	NONE

11D. Manufacturer Name and Address
NONE

12A. Hispanic or Latino	12B. Race	12C. Race Source
2 - No	1 - White Other:	3 - Official Document

13. Age of Victim	14. Sex	15. Disposition	16. Injury Diagnosis
42	1 - Male	8 - Death	69 - Submersion

17. Body Part(s) Involved	18. Respondent	19. Type of Investigation	20. Time Spent (Operational / Travel)
85 - ALL OF BODY	3 - 2nd Hand Info Only	2 - Telephone	10.00 / 0.00

21. Attachment(s)	22. Case Source	23. Sample Collection Number
2 - Documents	05 - Newspaper	

24. Permission to Disclose Name (Non NEISS Cases Only)

○ Yes ◉ No ○ Yes for Manuf. Only ○ Verbal ○ Written

25. Review Date	26. Reviewed By	27. Regional Office Director
03/26/2013	8929	Frank J. Nava

28. Distribution	29. Source Document Number
Sarah Garland; Tanya L. Topka	X1311108A

IDI 130312HCC2496

This death incident was brought to the attention of the U.S. Consumer Product Safety Commission through a newspaper article. A 42 year old male was driving his UTV on a lake covered with ice when he encountered an open span of water and fell in. He was unable to get out of his seatbelt and drowned. This report was compiled from reports from the Department of Natural Resources, Sheriff's Department and Medical Examiner's offices.

INCIDENT REPORT

On January 19, 2013, in the morning, the 42-year-old male victim decided to take his 2012 UTV out for a drive. It was a clear day, about 43°F and good visibility. The victim was dressed in snowmobile gear including bibs, jacket, boots and a helmet. He and his 50-year-old male friend decided to drive their UTV's on a nearby ice covered lake. The victim's 2012 ATV was equipped with a chest and waist strap seat belt and there was netting attached to the sides of the driver/passenger compartment of the UTV that went up to a little above waist level. Following is a picture of the 2012 UTV from the manufacturer's website.

The two males first drove their UTV's across the ice covered lake to have lunch at a restaurant on the shore. After lunch and around 1:30 PM, they proceeded back across the lake with the 50-year-old male in the lead about ¼ mile ahead. Both UTV's were about 150 feet from the shore and traveling at about 30-40 mph when the lead UTV encountered about eight feet of open water and was able to glide across to solid ice. This driver then stopped and turned around to see if the victim made it across as well. As the 42 year old victim approached the open water and attempted to cross, his UTV immediately went down into the water.

When the 50-year-old friend observed this, he ran back to the open water with a tow strap. He hung the tow strap in the water and tried to give it to the victim for something to hold on to. The victim told him he could not get the seat belt off and asked if he had a knife. The friend did not have a knife and at that point, they had no means to detach the harness. The UTV began to sink and the victim went under the water with it. The friend called "911" for assistance. A by-stander who was on the shoreline and watching the UTV's drive on the lake, saw the second UTV go into the open water and sink. He also called "911" for assistance.

The area sheriff's department received the "911" call at 1:43 PM and dispatched personnel to the lake. Upon arrival, sheriff personnel were advised that the victim had not surfaced and they called for the county dive team. The dive team arrived around 2:30 PM and entered the water at 2:34 PM.

The dive team found the UTV completely upside down, resting on the bottom of the lake on its roll cage in about 15 feet of water. The victims' body was sideways in the seat and still seat belted in with a chest and waist strap. The netting that was attached to the sides of the driver/passenger compartment of the UTV was still intact. The divers cut the victim out of the seatbelt and the netting and brought him to the surface at 2:43 PM. At this point, the victim had been underwater for approximately one hour. Attached as Exhibit "B" is a copy of the Sheriff's Department reports.

The dive team removed the victim from the water, took him to the shoreline and began CPR. The victim was then transported to an area hospital where all efforts to revive him were unsuccessful and he was pronounced dead at 3:15 PM. The county medical examiner received a call at about 4:00 PM and arrived at the hospital at about 5:00 PM. The medical examiner consulted with the attending physician, examined the body and took a blood sample. The medical examiner determined that the manner of death was accidental and the cause of death was cold water drowning. No autopsy was performed and the toxicology results are not yet available. Attached as Exhibit "C" is a copy of the medical examiner's report.

A few days following the incident, arrangements were made to bring the UTV up from the bottom of the lake. At this same time, the Department of Natural Resources (DNR) was called to conduct a post incident investigation. The DNR warden consulted with the Sheriff's Department, examined the UTV and found no damages. Attached as Exhibit "D" is a copy of the DNR incident report.

This investigator received this assignment on March 12, 2013, contacted the sheriff's department, medical examiner's office and the Department of Natural Resources for copies of their reports. No photographs were taken at the scene by the investigating parties and no post incident photographs were taken of the UTV.

PRODUCT IDENTIFICATION

Product:	**POLARIS UTV**
Year:	**2012**
Manufacturer:	**POLARIS INDUSTRIES INC.** **2100 HIGHWAY 55** **MEDINA, MN 55340** **(763) 542-0500**
Model:	**RAZOR**
CC:	**900**
VIN:	(b)(3):Exemption 3 for 25(c)

Date of Manufacture: Unknown – (1)

Date of Purchase: Unknown – (1)

Place of Purchase: Unknown (1)

Bought New/Used or Rented: Unknown (1)

Cost: Unknown (1)

Aftermarket Modifications: Unknown - (2)

Seatbelt Used: Yes – Waist and chest straps

Odometer: Unknown - (4)

Helmet Used: Yes

Alcohol, drugs or medications involved: Unknown (8)

Experience with UTV: Unknown (9)

2012 Polaris Ranger® RZR® XP™ 900 Specifications

Identification

Model Type	Sport Utility
BASE MSRP(US)	**$15,999.00**
Warranty	6

Engine:

Engine Type	V Twin
Cylinders	2
Engine Stroke	4-Stroke
Valve Configuration	DOHC
Displacement (cc/ci)	875 / 53.4
Carburetion Type	Fuel Injected

Transmission:

Transmission Type	Continuously Variable (CVT)
Primary Drive (Front Wheel)	Shaft
Reverse	Yes

Wheels & Tires:

Front Tire (Full Spec)	ITP 900 XCT: 27 x 9-12
Rear Tire (Full Spec)	ITP 900 XCT: 27 x 11-12

Brakes:

Front Brake Type	Hydraulic Disc
Rear Brake Type	Hydraulic Disc

Technical Specifications:

Wheelbase (in/mm)	81.4 / 2068
Dry Weight (lbs/kg)	1190 / 540
Fuel Capacity (gal/l)	7.3 / 27.4

Seats:

Number Of Seats	2

Drive Line:

Driveline Type	Selectable 4X2 / AWD
Number Of Driveline Modes	2
Limited Slip Differential	Standard

Lights:

Halogen Headlight (s)	Standard

ATTACHMENTS

Exhibit "A" – Utility Vehicle Data Record Sheet

Exhibit "B" - Sheriff's Department reports.

Exhibit "C" – Medical Examiner's report.

Exhibit "D" – Department of Natural Resources report.

CALUMET COUNTY SHERIFF'S DEPARTMENT

MARK R. OTT, SHERIFF
Brett J. Bowe, Chief Deputy

Radio Station – KGL 593
WI Teletype Code – CASO

206 Court Street
Chilton, WI 53014

Chilton (920) 849-2335
Appleton (920) 989-2700 Ext. 222
FAX (920) 849-1431

DATE: 03/14/13

TO: Rosemary Perrizo, Investigator 1-866-922-6845
U.S. Consumer Product Safety Commission

FROM: Calumet County Sheriff's Department

NO. OF SHEETS INCLUDING COVER SHEET: 7

COMMENTS: RE: ATV Death Incident – (b)(3):Exemption
Location: Lake Winnebago
Date of Death: 01/19/13

CONFIDENTIALITY NOTICE

This message is intended only for the use of the individual or entity to which it is addressed and may contain information that is privileged, confidential, and exempt from disclosure under applicable law. If the reader of this message is not the intended recipient or the employee or agent responsible for delivering the message to the intended recipient, you are hereby notified that any dissemination, distribution, or copying of this communication is strictly prohibited. If you have received this communication in error, please notify us immediately by telephone and return the original message to us at the above address via the U.S. Postal Service. Thank you.

sheriff/secretary/forms

CALUMET COUNTY SHERIFF'S DEPARTMENT

Complaint No.
LCA13-000560

File Number

CAD INCIDENT #: **LCA130119000560**

OFFENSE: **Medical Rescue/Death**

REPORTING OFFICER: **Deputy Chris Wendorf**

REPORTING PERSON: (b)(3):Exemption 3 for 25(c)

VICTIM: (b)(3):Exemption 3 for 25(c) **(Deceased)**
(b)(3):Exemption 3 for 25(c)

SUSPECT:

WITNESS: (b)(3):Exemption 3 for 25(c)

OTHER: (b)(3):Exemption 3 for 25(c)

(b)(3):Exemption 3 for 25(c)

DATE/TIME OF OCCURRENCE: **01/19/13**

CALUMET COUNTY SHERIFF'S DEPARTMENT

Complaint No.
LCA13-000560

File Number

LOCATION: **High Cliff State Park Marina**
Lake Winnebago
Village of Sherwood

At 1343 hours on 01/19/13, I (Deputy CHRIS WENDORF of the CALUMET COUNTY SHERIFF'S DEPARTMENT) was dispatched to the HIGH CLIFF STATE PARK MARINA for the report of an ATV or four-wheeler that had fallen through the ice and the party had not resurfaced yet.

While responding to the location, I confirmed this was a witnessesed event where the ATV had gone through the ice. Dispatch advised they received two calls on the incident.

Upon arrival at the state park, I met with one of the HARRISON FIRST RESPONDERS and we drove to the south break wall off the marina. At that point, we ran the rocks on the break wall and got to a position closest to the open water. There was a male party standing on the west side of the opening that was later identified as (b) (b) stated the UTV (utility terrain vehicle), a Polaris Razor, had gone down in the water opening directly in front of him. While waiting for the CALUMET COUNTY DIVE TEAM/ICE RESCUE to arrive on scene, I maintained visual of the opening to see if anybody was to resurface.

There were numerous civilians that were on the ice. A few of the individuals attempted to go near the opening to attempt their own rescue. We advised and ordered them to back away from the hole and to get off the ice.

After the CALUMET COUNTY DIVE TEAM/ICE RESCUE arrived on scene and was on the way out to the open water, I found (b) and inquired from him what had occurred. (b)(3):E stated they were coming from the Waverly area, headed towards Stockbridge. (b)(3):E stated he was in the lead and had encountered the open water that he made across. (b)(3):E stated after he made it across the open water, he turned around to make sure the victim, (b)(3):Exemptio, had made it across the water. (b) stated as (b) hit the open water, his UTV immediately went down into the water. (b) stated he grabbed a tow strap from his vehicle and ran to the open water. (b)(3): stated he hung the tow strap in the water to try to give (b)(3): something to hold on to. (b) stated he could see (b) was trying to get his seatbelt and harness unhooked, however, was unable to.

The location of the open water is best described as being approximately 100 to 150 feet directly south of the south end of the outer break wall for the harbor. The best GPS coordinates for this location, based off of (b) 911 cell phone call is 44°, 9 minutes, 51 seconds north and 88°, 17 minutes, 55 seconds west.

After my initial conversation with (b), I escorted (b) to the shoreline where Deputy LESLIE LEMIEUX of the CALUMET COUNTY SHERIFF'S DEPARTMENT took custody of (b)(3): and stayed with him.

CALUMET COUNTY SHERIFF'S DEPARTMENT

Complaint No.
LCA13-000560

File Number

At that point, I gathered an evidence camera from my marked squad and took it to the end of the rock break wall and began taking photographs.

While taking photographs, Chief MIKE FUNK of the STOCKBRIDGE FIRE DEPARTMENT asked me if my camera was time stamped and date stamped to which I advised him I believed it was. Chief FUNK advised me at 1434 hours, to make notation the diver went in the water. The next notation, believed to be at 1443 hours, was that (b)(3): was removed from the water.

It was at that point, they began CPR from what I could see on the break wall. (b) was then taken to the shoreline.

Deputy LEMIEUX escorted (b)(3):E to the ambulance and returned a short time later with a .45 caliber Kimber Pistol that was in a leather holster reported to be on the hip of (b)(3):Exemptio. Deputy LEMIEUX placed the pistol on the rear floor behind the driver's seat of my marked squad car, #810.

After (b) was recovered and returned to the shoreline, I met with Sheriff MARK OTT of the CALUMET COUNTY SHERIFF'S DEPARTMENT and informed him of the situation. Arrangements were made with the fire department to also remove (b) vehicle from the ice.

I escorted Deputy LEMIEUX and (b)(3): to (b)(3):Ex house. I assisted Deputy LEMIEUX in notifying (b)(3):Ex wife of the situation. Shortly after that, we went to (b)(3):Ex house on Natures Way and made contact with (b)(3):Ex wife, (b)(3):Exemption, and notified her of the situation also. Arrangements were made for (b)(3): and his wife to come to the (b)(3):E property to transport (b)(3):Ex to the hospital.

While we were completing the notification, (b) daughter was very upset and I assisted her in taking her ice skates off, as they were ice skating when we found them. I helped (b)(3):Ex daughter get her boots on so she could be taken to her grandparents' house.

After they departed from the residence, I made my way back to HIGH CLIFF STATE PARK and met with Sheriff OTT. I collected numerous other personal items of (b)(3):Ex. This included his helmet, sunglasses, a wallet with miscellaneous credit cards in it, and miscellaneous clothing, including boots and snowmobile gear (bibs and jacket), that (b) was wearing.

I returned to the CALUMET COUNTY SHERIFF'S DEPARTMENT where those items were placed in the evidence room for temporary storage.

At approximately 0925 hours on 01/20/13, I met with (b)(3):Exemption 3 for who is the father-in-law of (b), and returned the previously mentioned items to (b)(3):Exe. (b)(3):Exem signed for the items on the Evidence/Property Custody Document and took them into his possession, including the wallet with the credit cards and the .45 caliber pistol.

CALUMET COUNTY SHERIFF'S DEPARTMENT

Complaint No.
LCA13-000560

File Number

At 1230 hours on 01/20/13, I made contact with DON BLODGETT, who was one of the dive members in the water at the rescue. DON stated the vehicle was found in a completely upside down state, resting on the bottom of the lake on its roll cage. DON stated (b) body was crossways or sideways in the seat and was still seat belted in with a chest and waist strap. DON described it as being similar to an automotive seat belt. DON stated the netting that is attached to the sides of the driver/passenger compartment of the UTV were still intact. DON stated the nettings go up to a little above the waist level. DON stated they cut (b)(3): out of the seatbelt and the netting.

Deputy Chris Wendorf
Calumet Co. Sheriff's Dept.
CW/lcv

CALUMET COUNTY SHERIFF'S DEPARTMENT

Complaint No.
LCA13-000560

File Number

TYPE OF ACTIVITY: **Supplemental Report**

DATE OF ACTIVITY: **01/19/13**

REPORTING OFFICER: **Deputy Leslie Lemieux**

At approximately 1343 hours on Saturday, 01/19/13, I (Deputy LESLIE LEMIEUX of the CALUMET COUNTY SHERIFF'S DEPARTMENT) responded to assist Deputy CHRIS WENDORF of the CALUMET COUNTY SHERIFF'S DEPARTMENT with a rescue call for an ATV driver reported to have fallen through the ice off of HIGH CLIFF STATE PARK MARINA in the Town of Harrison. The CALUMET COUNTY DIVE TEAM/ICE RESCUE was dispatched. Dispatch informed us a witness reported the ATV had gone through the ice and the operator had not surfaced.

At approximately 1350 hours, Deputy WENDORF and I arrived. The other ATV operator was still out on the ice near the breakwater waiting and calling for help. HIGH CLIFF STATE PARK Ranger JAY VOSTERS also arrived to assist. Deputy WENDORF and a first responder walked out on the southern breakwater to get a better visual on the location while waiting for the ice rescue team to arrive.

I spoke with a man at the marina who identified himself to me as (b)(3):Exemption 3 f. (b)(3):E told us he had seen two ATV's operating on the lake. (b)(3): stated one of his young sons, who was watching the ATV's, saw the ATV go through the ice. (b)(3): stated he saw the other ATV operator turn around and go back to where the ATV had gone through the ice. (b)(3): said he called 911 from his cell phone immediately.

The dive team was directed to a hole in the ice just south of the marina breakwater.

I spoke with the other ATV operator now on shore who identified himself to me as (b) (b)(3): . (b)(3): told me he and his friend, (b)(3):E had taken their ATV's to WAVERLY BEACH for lunch and were on the way home from a ride on the lake. (b)(3):E said he had driven across the open water past the breakwater and looked back for (b)(3):E (b)(3): said he went back for (b)(3): with his rope. (b)(3):E stated (b)(3): could not get out of his safety belt on his Razor and CHAD went under water with his machine.

HARRISON FIRST RESPONDERS, GOLD CROSS AMBULANCE and THEDASTAR stood by while the dive team worked on recovering (b)(3):E from the water. The dive team was successful in bringing (b)(3): out of the water. (b)(3): had been under the water for approximately one hour.

The ambulance turned over to me for safekeeping, a holstered handgun they had found on (b) person. I turned the loaded handgun over to Deputy WENDORF who also had some of (b)(3):Ex other personal belongings.

CALUMET COUNTY SHERIFF'S DEPARTMENT

Complaint No.
LCA13-000560

File Number

Medical personnel performed CPR on (b) on scene and (b)(3): was then transported by GOLD CROSS AMBULANCE to THEDA CLARK MEDICAL CENTER.

At approximately 1511 hours, I transported (b)(3): to his home, as we had been unable to reach his wife by phone. Deputy WENDORF and I met with (b) wife, (b)(3):Exemption 3 for, at their nearby Sherwood home.

Deputy WENDORF and I went to the (b) address, described by the (b) and verified by dispatch, to notify (b) family of the incident. Deputy WENDORF and I found (b) wife, (b)(3):Exemption, in the backyard by the pond. We stood by with (b) while arrangements were made for the care of their two children. (b) and (b) arrived to take (b) to the hospital.

Arrangements were made for (b) ATV to be secured by the park ranger after the fire department pulled it off the ice.

At approximately 1601 hours, we were notified (b) had been pronounced dead at the hospital.

Deputy Leslie Lemieux
Calumet Co. Sheriff's Dept.
LL/lcv

Calumet County
Office of the Medical Examiner

206 Court Street, Chilton, WI 53014-1198
Phone: (920) 849-1467
Dispatch Center: (920) 849-2335
Fax: (920) 849-1609
Michael Klaeser, CRNA, Medical Examiner
klaeser.mike@co.calumet.wi.us

March 18, 2013

Rosemary Perrizo
Senior Investigator
U.S. Consumer Product Safety Commission

Re: Death of (b)(3):Exemption 3
DOD: 01/19/2013

Manner of Death: **ACCIDENTAL**

Cause of Death: **COLD WATER DROWNING**

Sincerely,

Michael Klaeser, CRNA, D-ABMDI
Calumet County Medical Examiner

CALUMET COUNTY
MEDICAL EXAMINER CASE FILE WORKSHEET

Date: 1-19-2013 Case Number: 2012-1-19-01

Name of Decedent: (b)(3):Exemption 3 for 25(c)

DECENDENT

Sex ☒ Male ☐ Female	Age (1 year or over)	Age (< 1 year) ☐ Mos. ☐ Days ☐ Hrs. ☐ Mins. ☐ Unk.	Date of Birth (Mo/Day/Yr) (b)(3):Exemption 3 for 25(c) ☐ Unknown
Marital Status ☐ Single ☒ Married ☐ Divorced ☐ Widow ☐ Separated* ☐ Unk *Still legally married	Race ☒ White ☐ Black ☐ Native Amer. ☐ Asian (Specify) ____ Hair Color Bald Eye Color ____		Decedent's SS# ☐ None ____ Decedent's Drivers License ☐ Retained ☐ L.E. ☐ None
Residence (Street/City/State/ZIP) (b)(3):Exemption 3 for 25(c)			Home Phone Number (Include area code)
Next of Kin Name (b)(3):Exemption 3 for 25(c)	Next of Kin Address Same		Next of Kin Phone Number Same
Relationship to Decedent Wife	Date and Time Notified (Mo/Day/Yr) At Scene - CPR AM PM Hour		Notified By

CASE REPORTED

Time of Call 4:00 AM (PM)	By Whom (Name of Person) Dispatch	Name of Reporting Agency/Facility CCSD
Call Received by Regina	Time of 911 Call ☐ None 1:43 AM (PM) L.E. Case/Complaint #	Type ☐ Cremation ☐ Exhumation ☐ Body Found ☐ Home Death ☐ Suspected Injury/Poison ☐ Other Non-Inst. Death ☒ Other Accident / Drowning
Time Arrived 5:00 AM (PM)	Arrived at ☒ Scene or ☐ Other Location (Address or location) Theda Clark EK	Notification L.E. Office ____ D.A. ____

MEDICAL HISTORY ☐ NONE

Name of Attending Physician DR Chris Hugo - ER MD	Hospital/Clinic Name	Last Date Seen by Physician
Last Hospitalization (Place and Date)	Physician Phone Number	Reason Seen
Medication/Dosage Prescribed	Conditions for Which Meds Prescribed	Notes:
Recent Complaints	Does Decedent Have any Communicable or Contagious Disease? ☐ No ☐ Yes – If yes, specify Isolation techniques to be used	
Resuscitative Efforts (Date)	Efforts Made (CPR, Oxygen, etc.)	
Law Enforcement/Emergency Medical Agency CCSD Gold CROSS AMB Theda Star		
Other Medical History Information CPR warmed Fluid Peritoneal Lavage Bilat chest tubes Airway Pulse. IV, ET ACS. Drain bloody fluid from ET Tube		

DNR take over WendORF, MarkOTT

Case Number: 2013-01-19-01

Name of Decedent: (b)(3):Exemption 3 for 25(c)

SCENE AND WITNESS

Date and Time Pronounced (Mo/Day/Yr): 15:15 AM (PM)	Appears Decedent Died: ☐ At Scene ☐ Unknown ☒ Transported from: Lake Winnebago	Body Located: ☒ Indoors ☐ Outdoors. Circumstances of Death: Drowning - driving UTV on ice - Sank
Ambient Temperature: ☐ N/A or °F / C	If Outdoors, List Weather Conditions: ☐ N/A Approx 35°	Location of Body: P.R.
Position of Body: Supine. Had Body Been Moved? ☒ Yes ☐ No ☐ ?	Describe Clothing: Hosp Gown/Nude	Additional Remark
Was Death Witnessed? ☒ Yes ☐ No. Death Pronounced by: Chris Hugo MD	Names of Witness:	Relationship to Decedent
Date Last Seen Alive: 1-19-2013	Hour Last Seen Alive: AM (PM) Approx 1:40	Where Last Seen Alive (Location): on the ice of Lake Winnebago
Last Seen By (Name): (b)(3):Exemption 3 for 25(c)	Other Indications of Probable Date and Time of Death	

INITIAL ASSESSMENT

Evidence of Special Circumstances (describe if checked) ☐ N/A

- ☐ Suspicious
- ☒ Injury/poison: Drowning
- ☐ Meds.
- ☐ Alcohol
- ☐ Illegal Drugs
- ☐ Weapon
- ☐ Sexual Assault

Condition of Body ☐ N/A

Decomposition ☒ No or Describe

Livor ☐ Absent ☐ Fixed or Describe: Anterior Pressure Points

Rigor ☐ Absent ☐ Complete or Describe

Body Temperature _____ °F / C ☐ Rectal ☐ Other

INJURY ☐ NONE

Date of Injury (or Poisoning): 1-19-2013	Time of Injury: ☐ AM ☒ PM Approx 1:40	Place of Injury (home, farm, highway): Town of Woodville. High Cliff Marina off of Beach
Injury at Work? ☐ Yes ☒ No	Location: Lake Winnebago	County of Injury (Injury occurring in another county, contact that coroner/medical examiner immediately): ☒ This County ☐ Other
Reporting Required / Requested? ☐ DOT ☐ OSHA ☐ Farm ☐ DNR ☐ DILHR ☐ Gun ☐ SID ☐ Other: DNR	Describe How Injury Occurred: Riding in a "UTV" on Lake Winnebago when he came upon open water, sank the vehicle.	

Case Number: 2013-1-19-01

Name of Decedent: (b)(3):Exemption 3 for 25(c)

CAUSE AND MANNER	Initial Suggested manner of Death ☐ Natural ☐ Suicide ☐ Pending ☑ Accident ☐ Homicide ☐ Undetermined	Final Manner of Death ☐ Natural ☐ Suicide ☐ Pending ☑ Accident ☐ Homicide ☐ Undetermined	
	Cause of Death Immediate Cause a. Cold water Drowning	Interval Between Onset and Death immediate	Other Significant Conditons
	Due to b.		
	Due to c.		
	Due to d.		
	Name of Medical Certifier of Death Certificate Regina M Behnke	Title DME	Date D. C. Signed 1-21-2013

NOTES

Per Reports of officer Wendorf. Victim was a driver of a "UTV" on Lake Winnebago. Was Riding on the ice c̄ a friend the friend was in another person vehicle. He crossed an approx 8 ft wide open section of water. Chris came up behind the first vehicle but was not able to make it across the open water. Accident occurred approx 150 yrds off of the Beach by the Marina at High cliff State park. in approx 15 ft of water. officer wendorf stated the friend ran to the open water to try to help but could not. The friend could see Victim trying to disengage himself from the unit. He was wearing a helmet. officer Wendorf stated o damage to the helmet o other obvious or suspect circumstances Submersion before rescue approx 1 hr. a Heathett was used. Victim unable to get it undone before he was overcome. Brought to ER via Theda Star.

ACCOUNTING	Hours of Work	Mileage	Other Expenses
	Charges ☐ Cremation Permit ☐ Disinterment Permit ☐ Other ____ ☐ Other ____ ☐ Other ____ ☐ Other ____		

IDI 130312HC02496 #1

Exhibit "D" - Department of Natural Resources report

OFFICER INCIDENT REPORT FOR:

☐ Snowmobile Crash
☒ ~~ATV~~ Crash UTV

Mail To: WI Department of Natural Resources
ATT. Bureau of Law Enforcement
P.O. Box 7921
Madison, Wi 53707-7921

☐ F. Warden
☒ W. Supervisor
☒ Rec. Safety Warden

☐ On Scene Investigation
☒ Post Incident Investigation

Instructions to Officers: Complete all portions of this report. For the purpose of this report, fatal snowmobile and ATV incidents, along with all reportable two-party incidents, shall be investigated. Reportable being injury incidents which require a physician's attention. Two-party incidents are those with two or more machines involved, or one machine and a person not on a snowmobile/ATV. Other snowmobile/ATV incidents may be investigated as time permits.

Report Number

CRASH INCIDENT CRITERIA

Number of Vehicles in crash: 1

Death related to incident? ☒ Yes ☐ No

Injuries requiring medical treatment? ☐ Yes ☒ No

Disappearance of person indicating injury or death? ☐ Yes ☒ No

Date of Incident	Day of Week	Time of Day	Location of Incident:
01/19/2013	Saturday	1:43 ☐ am ☒ pm	☐ Private Land ☐ Public Road ☐ Public Trail ☒ Lake or Stream (Lake Winnebago) ☐ Public Land ☐ Hwy. Right-of-way ☐ Private Trail ☐ Route

County: Calumet | City or Township: Harrison | State: WI

OPERATOR A

Operator's Name | Telephone Number
(b)(3):Exemption 3 for 25(c)
Address
(b)(3):Exemption 3 for
City, State, Zip Code
(b)(3):Exemption 3 f
Operator's Date of Birth (M-D-Y) (b)(3):Exe
Age 42 Gender ☒ Male ☐ Female

Owner's Name (if different than operator) | Telephone Number
same ( ) -
Address
City, State, Zip Code

Operator Completed DNR Snowmobile/ATV Safety Training Course? ☐ Yes ☒ No

Operator's Experience ☐ 0 – 100 Hours ☒ Over 100 Hours

Was the Operator Wearing A Helmet? ☒ Yes ☐ No

Operator Factor ☒ Appeared Normal ☐ Ability Impaired

Did the Operator Have Eye Protection? ☒ Yes ☐ No

Operator's Condition ☐ Had Been Drinking ☐ Physical Disability ☐ Using Drugs ☐ Other _____

Blood Alcohol Test ☐ Intoxilyzer ☐ Blood Results_____ ☒ No

Operator Cited For OWI? ☐ Yes ☒ No

Statement Taken? ☐ Yes ☒ No

Comments:

OPERATOR B

Operator's Name | Telephone Number ( ) -
Address
City, State, Zip Code
Operator's Date of Birth (M-D-Y) - -
Age Gender ☐ Male ☐ Female

Owner's Name (if different than operator) | Telephone Number ( ) -
Address
City, State, Zip Code

Operator Completed DNR Snowmobile/ATV Safety Training Course? ☒ Yes ☐ No

Operator's Experience ☐ 0 – 100 Hours ☐ Over 100 Hours

Was the Operator Wearing A Helmet? ☐ Yes ☐ No

Operator Factor ☐ Appeared Normal ☐ Ability Impaired

Did the Operator Have Eye Protection? ☐ Yes ☐ No

Operator's Condition ☐ Had Been Drinking ☐ Physical Disability ☐ Using Drugs ☐ Other _____

Blood Alcohol Test ☐ Intoxilyzer ☐ Blood Results_____ ☐ No

Operator Cited For OWI? ☐ Yes ☐ No

Statement Taken? ☐ Yes ☐ No

Comments: This is a UTV related incident, DNR registered.

OFFICER INCIDENT REPORT FOR ATV/SNOWMOBILE CRASH

VEHICLE A

Vehicle Type ☐ Snowmobile ☐ Three Wheel ATV ☒ Four Wheel ~~ATV~~ UTV		Name of Passenger – Vehicle A: none	Telephone Number: ( ) -
Vehicle Rented ☐ Yes ☒ No	Vehicle Borrowed ☐ Yes ☒ No	Address	
Make of Vehicle: Polaris	Chassis Serial Number: (b)(3):Exemption 3 for	City, State, Zip Code	
Vehicle Registration Number: 1464CV	Expiration Date: 03/31/2014 / State: WI	Date of Birth (M-D-Y): - - / Age	Gender: Male
Model of Vehicle: Razor / Year: 2012	CC/Horsepower: 900cc	Was Passenger Wearing A Helmet? ☐ Yes ☐ No	
Studded Tracks ☐ Yes ☒ No	Estimated Speed At Time of Incident: 35 MPH	Did Passenger Have Eye Protection? ☐ Yes ☐ No	

VEHICLE B

Vehicle Type ☐ Snowmobile ☐ Three Wheel ATV ☐ Four Wheel ATV		Name of Passenger – Vehicle A	Telephone Number: ( ) -
Vehicle Rented ☐ Yes ☐ No	Vehicle Borrowed ☐ Yes ☐ No	Address	
Make of Vehicle	Chassis Serial Number	City, State, Zip Code	
Vehicle Registration Number	Expiration Date / State	Date of Birth (M-D-Y): - - / Age	Gender: Male
Model of Vehicle / Year	CC/Horsepower	Was Passenger Wearing A Helmet? ☐ Yes ☐ No	
Studded Tracks ☐ Yes ☐ No	Estimated Speed At Time of Incident MPH	Did Passenger Have Eye Protection? ☐ Yes ☐ No	

TYPE AND CAUSE OF INCIDENT

Type Of Incident
- ☐ Fell from moving Snowmobile/ATV
- ☐ Collision with fixed object
- ☐ Collision with another Snowmobile/ATV
- ☐ Collision with moving motor vehicle
- ☐ Collision with parked motor vehicle
- ☒ Broke through ice
- ☒ Driven into open water
- ☐ Snowmobile/ATV rolled over
- ☐ Struck fence or cable
- ☐ Injured by contact with part of Snowmobile/ATV
- ☐ Pedestrian struck by Snowmobile/ATV
- ☐ Being pulled by Snowmobile/ATV
- ☐ Other: _____

Activity at Time Of Incident
- ☒ Recreational
- ☐ Farm related
- ☐ Sanctioned race/event
- ☐ Construction
- ☐ Hunting

What in Your Opinion Contributed to the Incident?
- ☐ Drinking or Drugs
- ☐ Vehicle speed
- ☐ Equipment failure
- ☐ Failure to yield
- ☐ Inexperience
- ☐ Trail conditions
- ☒ Other: poor ice conditions

ENVIRONMENT

Weather
- ☐ Foggy – Mist
- ☐ Raining
- ☐ Snowing
- ☒ Clear

Temperature 43 ° F

Trail Condition
- ☐ Icy
- ☐ Smooth
- ☐ Rough
- ☐ Muddy
- ☐ Dry
- ☒ Other: frozen lake surface

Visibility
- ☒ Good
- ☐ Fair
- ☐ Poor
- ☐ Day
- ☐ Night

Road Condition
- ☒ Dry
- ☐ Snow Covered
- ☐ Wet
- ☐ Gravel
- ☐ Paved
- ☐ Other: _____

DESCRIBE WHAT HAPPENED (The Sequence of Events Leading Up to the Incident):

The victim, (b)(3):Exem, was operating a Polaris Razor UTV, with current DNR registration of 1464 CV on the frozen surface of Lake Winnebago, south of High Cliff State Park (HCSP) and just south of the HCSP harbor break wall. The victim was following another UTV, operated by (b)(3):Exem, which was approximatey 1/4 mile ahead of the victim/UTV. The victim approached an open area of water and attempted to cross, as did (b)(3) who he was following. The victim failed to reach solid ice, while operating his machine at approximately 30-40 mph.

When (b)(3), the lead operator of the other UTV observed this, he ran to the open water with a tow strap. Victim stated to (b)(3) he could not get the harness (seat belt) off. The victim asked if (b)(3) had a knife to cut the harness. (b)(3) did not have a knife and had no means to detach the harness from the victim. The victim went under water with the UTV. Victim was under water for approximately an hour before the Calumet County Dive Team could recover him.

Victim was taken by ambulance to Theda Clark Hospital. He did not survive.

OFFICER INCIDENT REPORT FOR ATV/SNOWMOBILE CRASH

Draw a Diagram of Crash Incident. Indicate North with an arrow in the circle. (Attach additional sheets if necessary.)

See attachment

Diagram area of damage on appropriate chart below.

→ Thrust Direction At Point of Greatest Impact	⬭ Area Of Damage

Snowmobile-A

Snowmobile-B

ATV-B

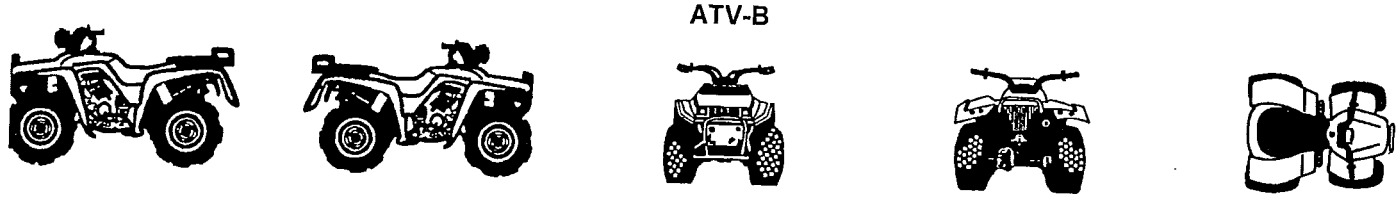

ATV-B

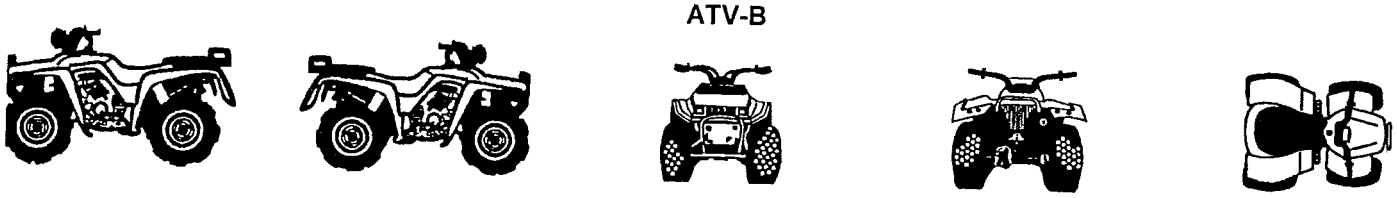

INJURIES/DEATHS

	A	B
Vehicle (Circle One)		
Name:	(b)(3):Exemption 3 for 25(c)	
Address:		
Dr.		
City, State, Zip Code:		
Telephone Number:		
Date of Birth & Age:		
Was The Victim:	☒ Operator ☐ Passenger ☐ Pedestrian	☐ Operator ☐ Passenger ☐ Pedestrian
Type of Injury:	☐ Minor – No Permanent Injury ☐ Major – Required Hospitalization ☒ Fatal	☐ Minor – No Permanent Injury ☐ Major – Required Hospitalization ☐ Fatal
Specific Injury: (If more than one, number choices in order of severity)	__ Amputation __ Broken Bone(s) __ Burns __ Contusion __ Head Injury __ Hypothermia __ Internal Injuries __ Laceration __ Spinal Injury __ Sprain/Strain __ Neck Injury __ Back Injury __ Shock __ Dislocation	__ Amputation __ Broken Bone(s) __ Burns __ Contusion __ Head Injury __ Hypothermia __ Internal Injuries __ Laceration __ Spinal Injury __ Sprain/Strain __ Neck Injury __ Back Injury __ Shock __ Dislocation
Cause Of Death:	☐ Trauma/Impact Injury ☒ Drowning _____ ☐ Hypothermia ☐ Other _____	☐ Trauma/Impact Injury ☐ Drowning _____ ☐ Hypothermia ☐ Other _____

WITNESSES (Other Than Operator or Injured Persons)

Name:	(b)(3):Exemption 3 for 25(c)	(b)(3):Exemption 3 for 25 (c)	
Address:			
City, State, Zip:			
Telephone #:			(___) ___-____
Date Of Birth:			

INFORMATION SOURCES

Other Investigating Agencies:	Calumet County Sheriff's Department	
Other Agencies Rendering Assistance: Chilton, Calumet County	Fire Dept's from Harrison, Stockbridge, Gold Cross Ambulance	Calumet County Dive Team

ATTATCH ALL CASE ACTIVITY REPORTS AND DIAGRAMS

Attachments To This Report:

- ☒ Narrative/Case Activity Report
- ☒ Diagram Of Incident
- ☐ BAC Report
- ☐ Coroner's Report
- ☐ Citation Or Criminal Complaint
- ☒ Other Agency Reports
- ☐ Statements
- ☒ Photographs/Negatives
- ☐ Other: ____

Wendorf

Were Photos Taken? ☒ Yes ☐ No By Whom? Deputy Chris

Enforcement Action Taken (Please Attach Copy Of Citation Or Complaint)

☐ Yes ☒ No If Yes Explain: ____

VALIDATION

Investigation Prepared By: April Dombrowski AD	Date: 01/22/2013	Agency: WDNR
Primary Cause Of Incident: Drowning	Secondary Cause Of Incident: ____	Causes Based On: ☐ Invest. & Oper. Report ☒ Investigation ☐ Other

REVIEWER

Reviewed By (Supervisor)	Date: 2/5/2013	Agency: Wis DNR Byron Goetsch

•• ATTACH ALL CASE ACTIVITY REPORTS AND DIAGRAMS ••

IDI 130312HCC2496 – Contact List

Contact List

April Dombrowski, Warden
Heather Gotschil, Warden
Julie Fitzgerald, Operation Program Assoc.
WI Department of Natural Resources
East Co. Road Y, Suite 700
Oshkosh, WI 54901
(920) 424-3055

Brenda – Records
Calumet County Sheriff's Department
206 Court Street
Chilton, WI 53014
(920) 849-2335

Michael Klaeser, Medical Examiner
Calumet County
206 Court Street
Chilton, WI 53014
(920) 849-2335

Victim

(b)(3):Exemption 3 for 25(c) – 42 yom – Drowned

IDI #: 130312HCC2496

Exhibit #: "A"

Utility Vehicle Data Record Sheet

Front

A Driver	Right Front Passenger
Left Rear Passenger	Right Rear Passenger
Cargo Bed	

Rear

The Utility Vehicle

A:		
Age: 42	Height: Unknown	
Gender: M	Weight: Unknown	
Helmet (Y/N): Y	Seatbelt (Y/N): Y	
Killed/Injured/Neither/Unknown: Killed		
Injury Description: Drowned		
Did vehicle land on victim: No		
Ejected (Either partially or fully): No		

B:		
Age:	Height:	
Gender:	Weight:	
Helmet (Y/N):	Seatbelt (Y/N):	
Killed/Injured/Neither/Unknown:		
Injury Description:		
Did vehicle land on victim:		
Ejected (Either partially or fully):		

C:		
Age:	Height:	
Gender:	Weight:	
Helmet (Y/N):	Seatbelt (Y/N):	
Killed/Injured/Neither/Unknown:		
Injury Description:		
Did vehicle land on victim:		
Ejected (Either partially or fully):		

D:		
Age:	Height:	
Gender:	Weight:	
Helmet (Y/N):	Seatbelt (Y/N):	
Killed/Injured/Neither/Unknown:		
Injury Description:		
Did vehicle land on victim:		
Ejected (Either partially or fully):		

E:		
Age:	Height:	
Gender:	Weight:	
Helmet (Y/N):	Seatbelt (Y/N):	
Killed/Injured/Neither/Unknown:		
Injury Description:		
Did vehicle land on victim:		
Ejected (Either partially or fully):		

F:		
Age:	Height:	
Gender:	Weight:	
Helmet (Y/N):	Seatbelt (Y/N):	
Killed/Injured/Neither/Unknown:		
Injury Description:		
Did vehicle land on victim:		
Ejected (Either partially or fully):		

*If victim(s) were injured/killed, please include the other relevant information requested in the assignment message in the text of the IDI

Using the figure on the left, please fill in where the occupants were in the vehicle at the time of the incident using A, B, C, etc. to identify the occupant(s)' location. Fill in the occupants' characteristics in the corresponding location on the right. For example, the driver could be assigned to the letter 'A' and the letter 'A' would be placed in the diagram in the box designated 'Driver', and the drivers' characteristics would be filled on the right. If there were more than six occupants (or more room is needed), please add the other passenger(s)' information (or any other information) as needed. If information is not available, please indicate by 'na'.

Note: Not all locations indicated on the diagram exist in all types of utility vehicles. Please only use the locations that correspond to the incident vehicle. Please place an 'X' over the area if the vehicle was not equipped with the component.

Save

(b)(6)

1. Task Number	2. Investigator's ID	EPIDEMIOLOGIC INVESTIGATION REPORT
130313HCC1652	1947	

3. Office Code	4. Date of Accident YR MO DAY	5. Date Initiated YR MO DAY
810	2013 02 24	2013 03 14

6. Synopsis of Accident or Complaint UPC

On February 24, 2013, a 20 year-old woman died as a result of blunt force trauma to her trunk when she either jumped or was thrown from the cargo bed of a UTV operated by a 30 year-old man. The victim was in the cargo bed of the UTV along with two other people. The operator was driving the UTV up a steep hill and lost control of the UTV wherein the front wheels (axle) of the UTV rose off the ground and the left front bumper struck a tree and caused the UTV to spin and descend back down the hill. No one else was injured. The victim received CPR and was transported to the hospital where she was pronounced. Only the operator and front seat passenger were wearing seatbelts. No one was wearing a helmet. Addendum added 4/11/13

~~MFR AVELON NOTIFIED~~

COMMENTS: ___ YES ✓ NO
___ OVERRULED; ___ ATTACHED
✓ EXCISIONS/FOIA EXS. 6b
✓ DO NOT RE-NOTIFY ___ RE-NOTIFY
1/16/14 le

7. Location (Home, School, etc)	8. City	9. State
5 - OTHER PUBLIC PROPERTY	REDSTONE TOWNSHIP	PA

10A. First Product	10B. Trade/Brand Name	10C. Model Number
5044 - UTILITY VEHICLES	CAN-AM/COMMANDER	800R

10D. Manufacturer Name and Address
CAN-AM CORPPORATION HEADQUARTERS/[redacted]
CANADA 726 ST. JOSEPH ST.
VALCOURT QUEBEC JOE 2-LO,

11A. Second Product	11B. Trade/Brand Name	11C. Model Number
0	NONE	NONE

11D. Manufacturer Name and Address
NONE

12A. Hispanic or Latino	12B. Race	12C. Race Source
2 - No	1 - White Other:	2 - Respondent-Other

13. Age of Victim	14. Sex	15. Disposition	16. Injury Diagnosis
20	2 - Female	8 - Death	62 - Intern. Org. Inj.

17. Body Part(s) Involved	18. Respondent	19. Type of Investigation	20. Time Spent (Operational / Travel)
31 - UPPER TRUNK	3 - 2nd Hand Info Only	2 - Telephone	9.00 / 0.00

21. Attachment(s)	22. Case Source	23. Sample Collection Number
9 - Multiple Attachments	05 - Newspaper	

24. Permission to Disclose Name (Non NEISS Cases Only)

○ Yes ◉ No ○ Yes for Manuf. Only ○ Verbal ○ Written

25. Review Date	26. Reviewed By	27. Regional Office Director
03/19/2013	2147	Dennis R. Blasius

28. Distribution	29. Source Document Number
Sarah Garland; Tanya L. Topka	X1330171A

The following information was obtained from a phone interview with a state police official and from a coroner report. The state police and autopsy reports are pending. The incident involves a fatal UTV accident in which a passenger was killed after being thrown or having jumped from the cargo bed of the UTV while the UTV was going up a steep hill and the operator lost control.

The victim was a 20 year-old woman whose height and weight remain unknown. The victim was riding in the back of the UTV (in the cargo bed area) with two teenagers while a 30 year-old man was the operator of the UTV and had a 27 year-old woman as the front seat passenger. It was reported that the victim was using alcohol and marijuana prior to the incident, but it is unknown if the operator or any other passenger also used alcohol or drugs.

The operator was a 30 year-old man and the owner of the UTV, and had purchased it as new in January 2013. It is unknown if he had any previous UTV or ATV experience. It was learned that he did receive training and an instructional video upon purchasing the UTV.

The incident occurred on February 24, 2013, at approximately 2:00am in a wooded area that maintained a dirt/mud-covered trail. The weather did not play a factor in the incident. The victim was in the back of the UTV, along with two other passengers. The operator and front seat passenger were wearing seatbelts, but those passengers riding in the back (cargo bed) of the UTV were not. No one was wearing a helmet. The operator was driving the UTV up a steep hill and was approaching the crest of the hill when the front (axle) of the UTV rose up off the ground and the UTV was on its rear wheels (axle) only. This may have been caused by the UTV striking a tree root that was sticking out of the ground. The exact speed is unknown, but not ruled as a factor. While the UTV's front end was in the air, the left front bumper then struck a tree at a point approximately eight feet above the ground, which caused the UTV to rotate counter clock wise and descend back down the hill. There are conflicting reports if the UTV flipped or rolled over, or just descended back down the hill. Before the UTV began going back down the hill and shortly after the front end rose up, the victim and other two passengers in the rear of the UTV either jumped from the UTV or were thrown from the UTV. The UTV eventually came to a stop at the bottom of the hill and in its upright position.

Initially, the victim only complained of ankle and back injuries and was taken to a friend's house. However, while at the friend's home, the victim began vomiting, lost consciousness and stopped breathing. CPR was attempted by the victim's friends, but the victim did not regain consciousness and was transported to a local hospital and pronounced dead.

The coroner ruled that the victim died as a result of blunt force trauma to her trunk and that the manner of death was an accident (see Exhibit A for coroner's report). However, the state police official stated that his investigation is ongoing and that the operator of the UTV may face criminal charges. The state police report and autopsy report are pending (see Exhibit B for Missing Documents form), but are not expected to be received for an extended period of time.

No one else was injured in the incident. The UTV sustained minor damage to its front end and its disposition is unknown.

As per the <u>UTV investigation guidelines</u>:

Vehicle Information

1. The incident UTV was a **Can-Am** 800R *Commander*. The model year was 2013. The VIN is: (b)(3):Exemption 3 for 25(. The UTV was purchased as new in January 2013 and the price paid is unknown.
2. No known modifications were made to the UTV.
3. The seatbelt used by the operator and front seat passenger were of the 3 point type (victim was not wearing a seatbelt).
4. Odometer is unknown.

Rider/Driver Information

5. See Exhibit D (UTV Data Record sheet) for victim information.
6. The victim died from sustaining multiple blunt force trauma to her trunk area.
7. Neither the victim, nor the operator or other passengers were wearing a helmet.
8. It is unknown if the driver was under the influence of alcohol or drugs. However, the victim had used alcohol and drugs prior to the incident.
9. The operator's experience with UTVs is unknown, but did receiving training and video upon UTV purchase.

Incident Information

10. The terrain type was described as a dirt/mud road. The incident occurred during nighttime and the weather conditions were listed as not being adverse. Headlights were reported to be in use at the time of the incident.
11. n/a
12. Speed of UTV at time of incident was unknown, but not ruled as a factor.
13. It is suspected that the UTV may have struck a tree root that was atop the ground.
14. Driver of UTV was not attempting to make any turns.
15. It was reported that the UTV may have either flipped over or once it lifted its front wheels off the ground, it rolled back down the hill.
16. The UTV did not land on anyone.
17. n/a

Product Identification:

The incident UTV was a **Can-Am** 800R *Commander*. The model year was 2013. The VIN is: (b)(3):Exemption 3 for 25(. The UTV was purchased as new in January 2013 and the price paid is unknown.

The manufacturer is:
Can-Am Corporation Headquarters
Canada 726 St. Joseph St.
Valcourt Quebec Joe 2-Lo

The retailer is unknown.

Exhibits:

A. Coroner report (3 pages)
B. Missing Document form (1 page)
C. Contact List (1 page)
D. UTV Data Record Sheet (1 page)