C

Consumer Product Safety Commission
Directorate for Laboratory Sciences
Engineering Laboratory

UPHOLSTERED FURNITURE FLAMMABILITY TESTING: FULL SCALE OPEN FLAME DATA ANALYSIS

February 26, 1996

Test Personnel:

Textile Technologist	Linda Fansler
Mechanical Engineer	John Murphy
Technician	Andrew Bernatz
Toxicologist	Lakshmi Mishra MD, PhD
Textile Technologist	Gail Stafford
Technician	William Keenan

TABLE OF CONTENTS

Executive Summary i

Upholstered Furniture Flammability Testing. 1

Introduction 1

Background 1

Test Program 2

Results 7

Discussion 14

Conclusion 17

References 18

Tables 19

Table 1 Description of Chairs By Manufacturer20

Table 2 Dust Cover Constructions 21

Table 3 Small Scale Dust Cover Tests 24

Table 4 Skirt Constructions 25

Table 5 Full Scale Open Flame Tests - Seating Area 27

Table 6 Results of Cal 117 Component Tests . 30

Table 7 Results of BS 5852 Composite Tests . 32

Table 8 Performance of Fire Resistant Interliner Fabrics After Five Minute Exposure To Flame 33

Table 9 Types of Upholstery And Interliner Fabrics 34

Table 10 Types of Filling Materials 37

Appendix A Research Protocol 39

Appendix B Memo To The File - Typical Burn Times For Small Open Flame Sources 40

EXECUTIVE SUMMARY

In 1993, the National Association of State Fire Marshals petitioned the Consumer Product Safety Commission (CPSC) to initiate a proceeding to regulate upholstered furniture flammability. On May 12, 1994, CPSC granted that part of the petition dealing with upholstered furniture fires ignited by small open flame sources such as matches or lighters.

On June 15, 1994, an advance notice of proposed rulemaking was published by CPSC for the possible development of a voluntary or mandatory standard. In support of this effort, CPSC staff developed a test program to determine the resistance of currently manufactured residential upholstered furniture to ignition from a small flame source. Two existing small open flame test methods were also evaluated for predictability of full scale ignition behavior as part of the test program, the State of California's Technical Bulletin 117 and the British Standard, BS 5852.

As part of the test program, 27 chairs were purchased from three United States furniture manufacturers. Each manufacturer provided nine chairs: three intended for sale in the United Kingdom (U.K.), three intended for sale in the State of California and three manufactured for the U. S. (non-California) residential market.

The chairs were tested following a research protocol developed by CPSC staff using a burner similar to that required by the British Standard, BS 5852. The protocol included three ignition locations on upholstered furniture: the dust cover, skirt and seating area. These locations were identified from a limited, non-random sample of existing CPSC in-depth fire investigation reports dating back to 1973.

The upholstery fabric, both skirt and seating area, of all 27 chairs tested to the full scale research protocol ignited during testing. In the seating area, the filling materials and fabrics underneath became involved in the California and U.S. chairs. The U.K. furniture however, had fire resistant interliners that protected the materials underneath.

Twenty two dust covers ignited. Five dust covers did not ignite. These non-igniting dust covers were lightweight nonwoven thermoplastic fabrics. Four of these non-igniting dust cover fabrics did not ignite but did melt away, exposing the fire resistant interliners above. One non-igniting dust cover fabric melted away exposing the wood above.

The small scale component test in California's Technical Bulletin 117 did not necessarily predict the ignition resistance of the "California" chairs in full scale tests. Filling materials passing the California requirements charred and melted in the full scale chair tests.

The small scale composite test, British Standard BS 5852, predicted the ignition propensity of the "U.K." chairs in all cases. The ignition performance of the small scale BS 5852 mockups was consistently similar to that of the full scale chairs as the upholstery fabric ignited and continued to burn in both cases.

Information obtained from this testing program will be used to develop small scale test methods for predicting the resistance of upholstered furniture to small open flame ignition. A standard burner assembly is currently under development for use in these tests and a round robin is planned for 1996.

UPHOLSTERED FURNITURE FLAMMABILITY TESTING: FULL SCALE OPEN FLAME DATA ANALYSIS

INTRODUCTION

This report presents an analysis of the test data and other information from the full scale open flame tests conducted by the Directorate for Laboratory Sciences during 1995 using a protocol (Appendix A) developed by staff from the Directorate for Engineering Sciences.

BACKGROUND

On May 12, 1994, the Consumer Product Safety Commission (CPSC) granted, in part, a petition from the National Association of State Fire Marshals. The petition requested that the Commission develop a mandatory flammability standard for upholstered furniture. A regulatory proceeding was initiated concerning that part of the petition dealing with upholstered furniture fires ignited by small open flame sources such as matches or lighters.[1]

On June 15, 1994, an advance notice of proposed rulemaking was published by the Commission for the possible development of a mandatory standard.[2] In support of the development of a standard, the Commission staff evaluated the resistance of currently manufactured residential upholstered furniture to ignition from a small flame source. Furniture manufactured for either the Upholstered Furniture Action Council's UFAC program[3], the State of California's furniture regulations[4], or the United Kingdom Furniture and Furnishings Regulations[5] was tested. The test methods in an existing small open flame regulation, the State of California's Technical Bulletin 117 (Cal 117)[4] and a British Standard, BS 5852 Part 1, (BS 5852)[6] were also evaluated as part of this effort. These small open flame test methods were evaluated for their ability to predict full scale test behavior. Information obtained from this testing program will be used to develop small scale test methods for predicting the resistance of upholstered furniture to small open flame ignition.

---

1 superscript refers to references on page 18.

TEST PROGRAM

The objectives of the test program were threefold:

1. to determine the resistance to ignition from a small flame source of some currently produced residential upholstered furniture, manufactured to either the UFAC, California or United Kingdom specifications;
2. to evaluate existing small open flame test methods for residential upholstered furniture for their ability to predict full scale behavior; and
3. to provide a point of reference for the development of small scale tests.

As part of the test program, 27 chairs were purchased by the Directorate for Engineering Sciences, from three United States furniture manufacturers. Each manufacturer provided three chairs built to three different specifications, i.e., three intended for sale in the United Kingdom (U.K.), three intended for sale in the State of California and three manufactured for the United States (non-California) residential market. There were nine different styles of chairs in each category. These chairs did not cover the range of materials or constructions on the market but did provide an indication of relative ignition behavior of the chairs tested. Each chair was tested following the Research Test Protocol For Small Open-Flame Ignitability of Full Scale Upholstered Furniture[7]. Additional fabrics and filling materials of the kinds found in each chair were also purchased and used in component (Cal 117) and composite (BS 5852) tests. To better understand the ignition behavior of each chair, all of the fabrics and filling materials from each chair were identified and characterized.

Limited additional tests were performed to obtain information on the typical burn times for small open flame sources like matches and lighters[8], the performance of fire resistant interliner fabrics and factors relating to ignition.

MATERIALS USED IN THE TEST PROGRAM

Full Scale

Twenty seven chairs were used in the full scale testing. The chairs were numbered one through 27. The first nine chairs were "California" chairs. Chairs number ten through 18 were "U.K." chairs and numbers 19 to 27 were U.S. residential "UFAC" chairs. Each chair was tested in three locations, the dust cover, skirt and the seating area.

Dust Cover Materials

Traditionally the dust cover has been considered to be a single piece of fabric on the underside of furniture. For the purposes of this testing, all materials and layers found in the vicinity of the dust cover fabric were considered as part of the dust cover construction. In all cases this meant one or more layers including fabrics used as structural support in addition to the traditional outer dust cover fabric. In many cases these layers were in immediate physical contact with each other and the dust cover fabric.

Skirt Materials

Eighteen chairs had skirts that consisted of three layers: the upholstery fabric, the stiffener and the lining. The lining was a layer of fabric used on the inside of the skirt to finish it off. The bottom edge of the skirt, where the flame was applied, consisted of two layers of the upholstery fabric with the stiffener in between. The seam where the upholstery fabric and lining were joined was offset by approximately 1/2 inch from the lower edge of the skirt.

Seating Area

The seating area consisted of the upholstery fabric and filling materials in seat cushions, back cushions and arms or sides. In addition a fire resistant interliner fabric was found between the upholstery fabric and the filling materials in the "U.K." chairs.

Component/Composite

Fabrics and filling materials used in the California and United Kingdom chairs were also tested in individual component (Cal 117) and composite (BS 5852) tests.

TEST METHODS

Full Scale

The chairs were tested following the procedures outlined in the research protocol. This protocol provided a test method to assess the ability of full scale furniture items to resist ignition when subjected to a small open-flame ignition source similar to a match, lighter, or candle. The protocol included three ignition locations on full scale upholstered furniture: the dust cover, skirt and seating area. These locations were identified from a limited, non-random sample of existing CPSC in-depth fire investigation reports dating back to 1973. In this

sample, children playing with matches, lighters or candles at these locations were reported to cause furniture ignition.[9]

The ignition source, a butane burner similar to that used in BS 5852, was applied manually to the test areas on the furniture being tested. Care was taken to consistently apply the flame in a steady manner and to synchronize the application of the flame to the starting of the timer. An ignition was defined as occurring when the material(s) being tested sustained flames after removal of the burner.

For the dust cover and skirt tests, the chair was placed on an adjustable frame designed and constructed by Laboratory Sciences staff. Tests were conducted in a specialized burn room with a high volume ventilation system to facilitate smoke evacuation after testing. CO_2 released from a tank through a nozzle was used to extinguish flames at the completion of each full scale test.

Although a common ignition source was used, the fabrics and/or filling materials and their combinations at each location were different and required specific test procedures applicable to that location. Limited experiments[8] (Appendix B) using matches and lighters, typical small open flame sources, support the 5, 15, 20, 25, and 50 second exposure times used in the research protocol.

Dust Cover

The dust cover was positioned horizontally and the burner flame tip brought in contact with the lower surface of the dust cover. The dust cover was initially exposed to the burner for 5 seconds; if no ignition occurred then the burner was reapplied to a different area on the dust cover for 15 seconds. If ignition did not occur with the second exposure, a third area of the dust cover was exposed to the flame for 25 seconds. If ignition occurred, the burning characteristics of the dust cover were observed.

Skirt

The skirt was positioned vertically and the burner flame tip brought in contact with the lower edge of the skirt. The flame impingement times were the same as for the dust cover.

Seating Area

The seating area test consisted of two separate tests. Both the back/seat configuration and the side/seat configuration were tested. The burner was applied so that both it and the flame were in contact with the crevice formed by the seat with either the

side or the back. Both seating area configurations were initially exposed to the lighted burner for 5 seconds; if no ignition occurred then the burner was repositioned and the flame applied sequentially for 15, 20, 25 or 50 seconds until ignition occurred.

Component/Composite

Cal 117 - Filling Material Tests

All furniture offered for sale in the State of California is required to be fire and smolder (cigarette) resistant as defined by California Technical Bulletin 117. Cal 117 is considered to be "a minimum standard"[10], in that it is only a component fire test. Cal 117 does not require a full scale small open flame test.[4]

Cal 117 provides a test method to determine the flame resistance of each type of filling material. The specimen orientation depends on the type of filling material. For example, resilient cellular material such as foam was tested in a vertical orientation with the flame impinged on the lower edge, while man-made fiber filling material such as polyester fiberfill was tested at a 45° angle. The type of gas used as an ignition source and the flame exposure time was also dependent on the specific test. An ignition occurred when the material(s) being tested sustained flames after the burner was removed.

Filling materials from the nine chairs manufactured to meet the California requirements were tested to the applicable open flame test methods in Cal 117.

BS 5852 - Mock Up Tests

The Furniture and Furnishings (Fire) (Safety) Regulations of 1988 set levels of fire resistance for residential upholstered furniture in the United Kingdom.[5] These regulations reference BS 5852 which provides a method of test for the ignitability by smokers' materials (matches) of upholstered composites for seating.[6] The ignition source was a small butane flame representing a burning match. A composite mock up of the upholstery fabric, interior fire resistant fabrics if present and filling materials, was tested by placing the burner so that it was in the crevice and the flame was in contact with the test materials. The flame was applied for 20 seconds. An ignition occurred when the materials being tested sustained flames after removal of the burner.

Fabrics and filling materials from the nine chairs manufactured for sale in the United Kingdom were tested following the procedure in BS 5852.[6]

CONDITIONING AND TESTING FACILITIES

Full Scale

The research protocol required conditioning of specimens at a temperature of 25° ± 2° C and less than 55% relative humidity for at least 24 continuous hours prior to testing. The chairs were stored in an area maintaining these conditions prior to testing. Racks were installed to facilitate storage. Testing began within 10 minutes of removal from the conditioning area. Hygrothermograph recordings of the conditioning and test areas were made and the charts kept throughout the test program.

The testing of the chairs was performed in a draft-protected room equipped with a hand held CO_2 suppression device to extinguish ignitions. An exhaust fan was used at the completion of the test to evacuate the room of smoke and fumes produced during the test. Laboratory staff wore protective clothing during the testing. The air flow in the test room was monitored using a hot wire anemometer and met the requirement of an air flow rate of less than 0.2 m/s in the immediate proximity to the test specimen.

Component/Composite

Cal 117

Cal 117 required conditioning of specimens at a temperature of 21°± 3° C and less than 55% relative humidity for at least 24 continuous hours prior to testing. Hygrothermograph recordings of the conditioning areas were made and the charts kept throughout the test program. The filling materials tested to Cal 117 were conditioned in either of two conditioning areas; a room, or an environmental chamber (Hot Pack, Model 883-14). Each was equipped with its own heating, air conditioning and humidifying system, conditioning racks and work bench.

Testing was conducted in draft protected areas in mini-chambers specified in Cal 117 under a fume hood that was used at the completion of each test to evacuate any smoke produced during testing.

BS 5852

BS 5852 required conditioning of specimens at a temperature of 20° ± 5° C and between 30 and 70 percent relative humidity for at least 16 hours prior to testing. Hygrothermograph recordings

of the conditioning areas were made and the charts kept throughout the test program. The conditioning area for the fabrics and filling materials tested to BS 5852 was equipped with its own heating and air conditioning and humidifying systems and conditioning racks.

The testing of the mock up composites was performed in a draft-protected room equipped with a hand held CO_2 suppression device to extinguish ignitions. An exhaust fan was used at the completion of the test to evacuate the room of smoke and fumes produced during the test.

RECORDING OF DATA AND OBSERVATIONS

All data and observations for each full scale chair and the component and composite tests were recorded on data sheets and filed according to chair number. A data base was also created and contains the data for each chair test. Color photographs were taken including:

1. the chair as received,
2. the geometry of the crevice locations, and
3. the three locations after testing - skirt, dust cover, and seating areas.

One full scale chair test and several mock up tests were videotaped. All labels and tags taken off each chair as well as specimens of the chair's components (i.e., fabric swatches, fillings, foams, etc.) were cataloged according to chair number.

MATERIALS IDENTIFICATION

A data sheet was developed to record a description of fabrics, filling materials, dust covers, and skirt components used in each chair's construction. Fabrics were weighed and their fiber contents determined qualitatively by microscopic examination. In some cases chemical analysis was also used to verify a fiber content. The presence of backcoating on the upholstery fabric was determined by touch and visual observation. Visual observations were also used to describe some of the chair components such as feathers. Densities of each filling material were determined; foams were analyzed using infrared spectrophotometric analysis; other filling materials were identified microscopically.

RESULTS

CHAIRS

Table 1 describes each of the three chair types from by each manufacturer. Most of the chairs were traditional armchairs with

tailored skirts. Three chairs from each manufacturer did not have skirts and are described as contemporary, scroll arm or wing chairs.

Dust Covers

Five of the 27 dust covers did not ignite. For the 22 dust covers that did ignite, ignition times ranged between 5 and 25 seconds. Table 2 shows the overall results of the dust cover testing.

Non-igniting Dust Covers

The five non-igniting dust cover fabrics were all light weight (1.1 to 1.6 oz/yd^2), nonwoven thermoplastic fabrics. One of the non-igniting dust covers was on a "California" chair (number 3) while the other four were on "U.K." chairs. The "U.K." chairs (numbers 10, 11, 16 and 18) had a fire resistant interliner as the second layer directly above and touching the dust cover fabric.

The dust cover of the "California" chair (number 3) was a nonwoven thermoplastic layer of fabric with a piece of wood directly above and covering the entire underside of the chair. The dust cover fabric was in immediate contact with the wood. The wood was 20 mm thick and had a smooth surface. Three attempts were made to ignite the dust cover. The burner was applied for 5, 15, and 25 seconds. The dust cover did not ignite. In all three cases, the thermoplastic dust cover fabric melted away from the flame exposing the wood directly above. The wood charred in the 15 and 25 second applications of the burner but did not ignite.

The four "U.K." chairs (numbers 10, 11, 16, and 18) had nonwoven thermoplastic dust cover fabrics over fire resistant interliner fabrics that were in immediate contact with each other. Chair number 10 had a nonwoven aramid fire resistant interliner fabric with a layer of wood directly above and touching the interliner fabric. Chair number 11 also had the nonwoven aramid interliner while chairs 16 and 18 had a knit glass blend fire resistant interliner fabric. Chair numbers 11, 16 and 18 also had a third layer of woven thermoplastic fabric directly above and touching the interliner.

In all of the "U.K." chairs, the nonwoven thermoplastic dust cover fabric did not ignite but melted away from the flame creating a small hole in the fabric. The second layer, i.e., the fire resistant interliner fabric, did not ignite.

Igniting Dust Covers

The igniting dust covers included light (1.1 to 1.6 oz/yd^2) and medium (3.0 oz/yd^2) weight nonwoven thermoplastic fabrics and medium weight (2.9 to 4.1 oz/yd^2) woven cellulosic/thermoplastic blend fabrics. Refer to Table 2 for a complete description of the igniting dust cover constructions.

Although chair number 19, a "UFAC" chair, had a similar dust cover construction to chair number 3 above, (i.e. with wood above the dust cover fabric), an ignition occurred when the burner was applied for 5 seconds. The dust cover fabric, a medium weight thermoplastic, ignited and the wood directly above the dust cover fabric charred.

The dust cover fabrics of "U.K." chair numbers 17, 13, and 14, all with fire resistant interliners, ignited. Chair number 17 had a fire resistant interliner layer directly above and in contact with the lightweight nonwoven thermoplastic dust cover fabric. The fire resistant interliner was a knit glass blend fabric, the same as found on chairs 16 and 18 where the dust covers did not ignite. The dust cover fabric on chair number 17 ignited when the flame was applied for 5 seconds. The interliner layer did not ignite and provided protection from the flames to the layers above.

Chairs number 13 and 14 had woven cellulosic/thermoplastic blend dust covers with a woven glass fire resistant interliner fabric directly above. The dust cover fabrics may not have been touching the interliner fabrics, although this can not be determined with certainty after testing. While the dust cover fabrics ignited and burned, the interliner layer blocked the flames from moving upward into the chair. However, the flames spread from the dust cover to the front and/or side panels of these three chairs (17, 13 and 14).

Two "U.K." chairs, (12 and 15), did not have fire resistant interliners in the dust cover constructions. Chair number 12 had a lightweight nonwoven thermoplastic dust cover fabric. Chair number 15 had a woven cellulosic/thermoplastic blend dust cover fabric. Both chairs had a woven thermoplastic layer directly above the dust cover fabric. The dust covers on both chairs ignited when the flame was applied for 5 seconds. The flames spread to the front panel of these chairs.

Small Scale Dust Cover Tests

A limited small scale study was designed to clarify the differences in dust cover ignitabilities observed above. The ignition resistance of eight dust cover fabrics alone and in combination with various materials was tested. Tests included:

the dust cover fabric only and the dust cover fabric with either an interliner, the structural support layer, or wood. The space between the dust cover fabric and the wood was also varied. Table 3 shows the results of this testing. Spectrophotometric analysis did not determine any chemical differences among these dust cover fabrics.

The dust cover fabrics, interliner, structural support fabric and wood were taken from the full scale chairs. When tested by themselves, the fabrics were held in place within a 5 inch by 5 inch frame. Fabrics were attached directly to the wood when tested in that combination. The same burner used in the full scale testing was used as the ignition source.

The dust cover fabric found on chair number 3 did not ignite when tested by itself. In the full scale test this fabric was directly below wood and likewise did not ignite.

The dust cover fabrics found on chair numbers 8 and 12 also did not ignite when tested by themselves. However, when these two dust cover fabrics were tested in combination with the structural support fabrics found directly above in the full scale chair, the structural fabrics ignited and sustained flaming. This confirmed the ignition observed in the full scale test.

The dust cover found on chair number 10 was tested two ways. In the first, the dust cover fabric and the interliner were tested together, then the dust cover fabric was tested by itself. Both of these variations did not ignite. There was also no ignition when this dust cover fabric was tested in full scale.

In the full scale chair test, the dust cover on chair number 13 ignited. When tested in direct contact with a wood backing in the small scale tests, the dust cover did not ignite. A second test with an approximate 1/16 inch space between the fabric and the wood also resulted in no ignition. Ignition did occur when the space between the fabric and the wood was increased to 1/8 inch. Ignitions also resulted when this fabric was tested with the same fire resistant interliner as found in the full scale chair.

The dust cover on chair number 16 did not ignite when tested in either the full scale chair test or in the small scale test by itself without the fire resistant interliner.

The dust cover on chair number 17, however, ignited when tested in the full scale chair test but did not ignite when tested in small scale both with and without the interliner and structural layers. Similarly, in the full scale chair test, the dust cover on chair number 19 ignited in 5 seconds even though there was a wood layer directly above. No ignitions occurred when this fabric was tested in small scale either by itself or

with wood backing at several spacings and with the structural fabric. It ignited briefly but self-extinguished in a follow up edge ignition test by itself. This may reflect differences in dust cover weight or composition.

Skirt

Eighteen of the 27 chairs had skirts. There was no difference in ignition resistance among any of the skirts. The flame was applied to the bottom edge of the skirt which consisted of two layers of the upholstery fabric with the stiffener in between. All of the skirts ignited when exposed to the butane burner for 5 seconds. The skirts continued to burn with no skirts self extinguishing. All three layers of each skirt were involved in the fire. Afterflame times, i.e. measurements of the time the skirt continued to burn after the flame was removed, were similar. The average afterflame time for the 24 skirts was 37.3 seconds, (range = 19 to 55 seconds).

The test was ended for ten of the 18 chairs with skirts when a second component of the chair became involved in the fire. The front panel became involved during the testing of eight chairs and the dust cover in the other two. For the remaining eight chairs the test was stopped as directed by the research protocol, when the flames reached the top of the skirt. Table 4 shows the skirt constructions and results of testing.

Seating Area

The seating area was tested in two locations. The burner was placed first in the junction created by the back/seat crevice and then in the junction created by the side/seat crevice. All of the seating area locations ignited. Table 5 shows the results of this testing.

Chairs one through nine, the "California" chairs, ignited and burned when the flame was applied to either seating area location. Both seating area locations ignited in either 5, 15 or 25 seconds, with the majority igniting in 15 seconds. This was similar to chairs 19 through 27, the "UFAC" chairs. The seating area locations ignited in either 15 or 20 seconds, with the majority igniting in 15 seconds. The outer upholstery fabric ignited and burned exposing the interior fabrics and filling materials for both groups of chairs. Filling materials closest to the upholstery fabric in both groups of chairs did not appear to differ in behavior. A visual examination determined that there were no appreciable differences between the "California" and "UFAC" chairs in the amount of filling material that melted and charred during testing. The interior filling materials, directly under the upholstery fabric contained thermoplastic fibers which melted away from the heat and flames during testing.

The test was ended when the flames reached a predetermined mark on the back or side of the chair depending on the location being tested. The time to the end of the test depended upon the burning propensity of the upholstery fabric. Some fabrics burned faster than others.

Chairs ten through 18, the "U.K." chairs, ignited and burned when the burner was applied for either 5, 15 or 25 seconds, with the majority igniting in 15 seconds. The outer upholstery fabric ignited and burned exposing the fire resistant interliner below. Although this material charred, it did not break through exposing the filling materials below. While the filling materials underneath did not ignite, they did melt. The test was ended when the flames reached a predetermined mark on the back or side of the chair depending on the location being tested. The time to the end of the test depended upon the burning propensity of the upholstery fabric. Some fabrics burned faster than others.

Component/Composite Results

Cal 117

The fabrics and filling materials representing those components found in the "California" chairs were evaluated using the applicable test method in Cal 117. Only filling materials representing the "California" chairs were tested to Cal 117. This included foam, filling and interior fabrics containing loose fill. Components representing six of the nine "California" chairs failed Cal 117 component tests. The components that failed included the following: chair number 2, seat foam, chair number 4, back foam, back and side filling, and interior fabric on pillow, chair number 5, seat foam and back/side filling, chair number 6, back/side filling, chair number 7, seat and side foam and chair number 8, armrest foam.

The foam was tested in both as received (or unaged condition) and after aging for 24 hours in a 104° C oven. Three foams failed in the unaged state only, one foam failed in the aged state only and two foams failed in both states.

The pillow fabric that failed in chair number 4 was tested as Cal 117 requires that the fabric encasing feathers/down be fire resistant. The fabric was tested in both the horizontal and vertical directions. This fabric failed when tested in one direction. Laboratory staff could not determine whether the fabric failed in the lengthwise or crosswise direction as the fabric sent was covering the pillow. Table 6 shows the results of this testing.

BS 5852

Composites representing those materials found in the back, side and seat locations of the "U.K." chairs were tested to BS 5852. Only filling materials representing the "U.K." chairs were tested to BS 5852. These included interliner and interior fabrics, foams and other filling materials. These filling materials were covered with the upholstery fabric during testing.

Composite mockups representing all nine "U.K." chairs (numbers 10 through 18), failed to meet the requirements of BS 5852. A failure was recorded if flames or progressive smoldering was present beyond 120 seconds of removal of burner. The upholstery fabric on all composite mockups continued to burn after the 120 second time limit. In the majority of the tests the upholstery fabric split, exposing the fire resistant interliner. The protective fire resistant layer remained intact in all tests, although the materials directly underneath melted from the heat and flame. Filling materials further back from the interliner were unaffected by the heat. Table 7 shows the results of this testing.

In an effort to determine if there were differences between fire resistant interliners, two of the fire resistant interliner fabrics (knit glass blend and nonwoven aramid), and several filling materials were exposed to the flame for 5 minutes to evaluate their performance under severe conditions. Filling materials representing three performance levels were used for this testing. These filling materials included, "UK foam", "CA foam", "CA foam/fiberfill" and "UFAC foam". Table 8 shows the results of this testing.

The fire resistant interliner fabrics provided protection from the flame except in one instance involving a knit interliner. The knit fire resistant interliner fabric also showed more degrading than the other two interliners. The amount of filling material melting and charring during the test depended upon the specific material. More of the UFAC standard foam charred and melted during testing than the CA (California) foam or the UK (United Kingdom) foam. While the CA fiberfill did not ignite, it did melt away due to the heat leaving the CA foam exposed underneath.

In a second related study, California components (chair number 6) were tested using the BS 5852 composite mockup. Two tests were conducted; in the first, a mockup representing the back/seat combination of chair number 6, was tested. The upholstery fabric ignited and the mockup continued to burn after the 120 second time limit. The fiberfill and foam filling materials ignited and melted through to the back of the mockup. In the second test, the California components were allowed to continue burning until the mockup was consumed. The mockup was

consumed in 720 seconds. A composite mockup of chair number 13 a "U.K." chair was also allowed to burn to completion. This mockup representing the back/seat combination, burned for 990 seconds. Most of the upholstery fabric was consumed during the test. The filling materials charred and melted but did not ignite. The fire resistant interliner was charred but intact.

Discussion

Full Scale

Dust Cover

The dust cover fabric on chair number 3, a lightweight (1.6 oz/yd^2) nonwoven, thermoplastic did not ignite in the full scale test or when tested in small scale by itself indicating that it was inherently flame resistant.

Chair number 19 had a similar dust cover construction to chair number 3, a thermoplastic nonwoven fabric with a layer of wood directly above. This chair ignited in the full scale test. However small scale tests did not result in an ignition. Chair number 19 had a heavier weight nonwoven thermoplastic dust cover fabric (3.0 vs 1.6 oz/yd^2). In addition, the nonwoven structure may not be uniform in density throughout the piece of fabric and nearness to the upholstery fabric may have been what sustained the flames in the full scale chair test. The upholstery fabric in this chair wrapped around the lower front edge of the chair and ignited during the test.

Seven of the nine "U.K." chairs had a fire resistant interliner directly above the dust cover fabric. In the United Kingdom regulations, the dust cover is considered fabric used on a non-visible part of the furniture and must be match resistant just like the upholstery fabric.[11] This means the dust cover fabric must meet a small open flame test or include a fire resistant interliner.

There were three types of fire resistant interliner fabrics used in the dust cover constructions of the "U.K." chairs. The three fire resistant interliner fabrics were: 1. a 100% woven fiberglass, 2. a glass blend knit, and 3. an aramid nonwoven.

The "U.K." dust cover constructions that did not ignite had either the knit or nonwoven fire resistant interliner fabrics as the second layer. In these constructions, the fire resistant interliner fabric provided protection to the internal components by acting as a fire blocker when the dust cover melted away.

Three "U.K." dust cover constructions ignited in spite of having a fire resistant interliner fabric layer. The dust cover

fabrics themselves ignited during the testing. One chair, number 17, with a knit glass blend interliner fabric behind the dust cover fabric ignited when the flame was applied for 5 seconds. Small scale tests of this construction did not result in ignitions. Ignitions occurred however, in a deviation from the small scale tests when the burner flame was allowed to follow the fabric as it melted away from the flame.

The two other "U.K." chairs, numbers 13 and 14, had cellulosic/thermoplastic blend dust cover fabrics. It was not surprising that this fabric ignited as the cellulosic content of the fabric would characterize its burning behavior. However, this dust cover fabric did not ignite in two small scale tests when in direct contact with wood or with a 1/16 inch space, indicating again that the wood may act as a heat sink.

Two of the "U.K." chairs did not have fire resistant interliners directly above the dust cover fabrics. While these chairs, numbers 8 and 12, ignited in the full scale test, the small scale tests indicated that the dust cover fabric itself melted away from the flame exposing the structural fabric. It was the structural fabric that ignited and sustained the flame. Thus, although the dust cover did not ignite itself, other components above the dust cover did.

Skirt

All of the skirts ignited. There was no difference in ignition resistance among any of the skirts. This was not surprising as the skirts were all similar in construction; each contained upholstery fabric, a stiffener and a lining fabric.

There is no provision in Cal 117 for the skirting area, however, the upholstery fabric must meet the requirements of a minimal flame standard[4] , i.e. only those fabrics with rapid and intense burning are screened out. While the skirting area was not specifically mentioned in the United Kingdom regulations, cover fabric on all parts of upholstered furniture must meet a small open flame test or include a fire resistant interliner.[11]

Seating Area

Except for one upholstery fabric that was 100% thermoplastic, (chair numbers 2, 12 and 21), all of the upholstery fabrics contained cellulosic fibers. Table 10 shows the fiber content of the upholstery fabrics on each chair.

Fabrics that contain cellulosic fibers, unless treated with a fire resistant finish, tend to burn when a flame is applied. Depending upon the amount of cellulosic fibers, a char is often formed that can break with continued application of heat and

flames. Thermoplastic fibers usually tend to melt away from the flame. The result in both of these cases is exposure of the filling materials underneath. Table 11 shows the fiber content of the filling materials in each chair.

In this study, all of the upholstery fabrics ignited and continued to burn exposing the filling materials to the flames in all of the "California" and "UFAC" chairs. The "U.K." chairs had fire resistant interliner fabrics directly under the upholstery fabric in the seating area, so although the upholstery fabric burned the interior components were protected from the flames.

The same three kinds of fire resistant interliner fabrics were used in the seating area locations as were found in the dust cover area: 1) woven fiberglass, 2) knit glass blend, and 3) an aramid nonwoven. No differences were observed in the level of protection provided by these interliner fabrics in the seating area under the full scale test conditions. The interliners remained intact and the internal components in these chairs were not exposed to the flames during testing.

Results of the limited evaluation of the fire resistant interliner fabrics over different filling materials, indicated that the knit fire resistant interliner fabric may be less effective as a fire blocker fabric in that it burned through and exposed what was underneath to the flames. In addition, the application of a flame for 5 minutes weakened the knit structure to the point where a small amount of pressure broke through the char that formed. During a fire this may occur from a candle lying on the cushion or from heat distortion causing a much more involved ignition.

Component/Composite

Cal 117

Results obtained when Laboratory staff followed the test procedures in Cal 117 indicated that not all filling materials portrayed as meeting Cal 117 did so. All three chair manufacturers supplied foam that did not consistently meet the requirements in Cal 117. This could mean that the fire retardant was not uniformly applied throughout the foam or that not enough of the fire retardant was applied.

BS 5852

The results of this small scale mockup testing were consistent with the full scale tests of the seating area. The outer upholstery fabric determined the likelihood of ignition of both these mockups and the chairs in this test program. All of the fire resistant interliners performed equally well during these tests by protecting the interior filling materials.

All of the composite mockups failed to meet the requirements of BS 5852, as the upholstery fabric continued to burn after the 120 second time limit. Although these mockups represented materials found in the chairs manufactured for the United Kingdom market, the tests in the United Kingdom regulations differed from the tests described in BS 5852. Filling materials were not tested with a standard fire retardant upholstery fabric nor were upholstery fabrics tested with standard fire retardant foam as prescribed in the United Kingdom regulations. BS 5852 was used in this test program since a test method to evaluate composite constructions rather than individual components was desired.

CONCLUSION

All of the 27 chairs tested to the full scale research protocol ignited at two or more locations. For these chairs, the upholstery fabric was key to the likelihood of ignition for the skirt and seating area. This is supported in a review of the published literature on the fire behavior of upholstered furniture; "in general, resistance to small flames of upholstered items depends more on the fabric than the padding".[12] In all 27 cases, the upholstery fabric ignited and sustained the flames. There were no appreciable differences observed between the ignition behavior of comparable "UFAC" and "CA" chairs. A similar amount of filling material melted and charred for both chairs during testing. Although the upholstery fabric on the "U.K." chairs also ignited, the fire resistant interliners offered protection to materials underneath. In these tests, the knit interliner did not appear to offer as much protection as the woven or nonwoven fire resistant interliners.

Some lightweight nonwoven dust cover fabrics were found to be non-igniting. Other dust cover fabrics did not ignite when tested with a wood heat sink directly above. The presence of flammable material directly above the dust cover could lead to ignition even when the dust cover did not ignite.

The small scale filling material component test in Cal 117, did not predict that the "California" chairs would ignite (seating area) in full scale. It should be noted however, that the component test did not involve the upholstery fabric which ignited in all chairs tested. Some "California" filling materials failed Cal 117 however even those that passed charred and melted in the full scale test. Although the small scale composite test based on BS 5852 appeared to predict the ignition propensity of these "U.K." chairs in full scale tests (in that ignitions occurred in both small and full scale tests), this reflected only the performance of the fabric in both tests.

REFERENCES

1. Briefing Package, Petition FP 93-1, Upholstered Furniture Flammability, Dale R. Ray, Directorate for Economic Analysis, April 8, 1994, Consumer Product Safety Commission.

2. Consumer Product Safety Commission, 16 CFR Part 1640, Upholstered Furniture; Advance Notice Of Proposed Rule-Making; Request For Comments And Information, June 15, 1994.

3. UFAC Test Methods, Upholstered Furniture Action Council, High Point, NC.

4. Technical Bulletin 117, State Of California, Department Of Consumer Affairs, Bureau Of Home Furnishings And Thermal Insulation, January 1980.

5. The Furniture And Furnishings (Fire) (Safety) Regulations 1988, United Kingdom, 1988 No. 1324.

6. BS 5852: Fire Tests For Furniture, Part 1. Methods Of Test For The Ignitability By Smokers' Materials Of Upholstered Composites For Seating, 1979.

7. Research Test Protocol For Small Open-Flame Ignitability Of Full Scale Upholstered Furniture, June 12, 1995, Consumer Product Safety Commission.

8. Memorandum To The File, John R. Murphy And Rikki Khanna, Match Burn Times, November 9, 1995, Consumer Product Safety Commission.

9. Memorandum To Ronald L. Medford From Dale R. Ray, ECPA, Upholstered Furniture Testing Status Report, May 8, 1995, Consumer Product Safety Commission.

10. Flammability Information Package, Flammability Questions And Answers, State Of California, Department Of Consumer Affairs, Bureau Of Home Furnishings And Thermal Insulation, January 1992.

11. A Guide To The Furniture And Furnishings (Fire) (Safety) Regulations, The Consumer Safety Unit, Department of Trade and Industry, London, undated.

12. Babrauskas, Vytenis and John Krasny, NBS Monograph 173, Fire Behavior Of Upholstered Furniture, National Bureau of Standards, November 1985.

TABLES

TABLE 1

DESCRIPTION OF CHAIRS BY MANUFACTURER

MANUFACTURER	CHAIR NO.	DESCRIPTION
A	1,11,20	traditional, loose back pillow and seat cushion, tailored skirt
	2,12,21	traditional, loose back pillow and seat cushion, tailored skirt
	3,10,19	contemporary, loose back pillow and seat cushion, padded bottom
B	4,13,22	traditional, loose back pillow and seat cushion, tailored skirt
	5,14,23	traditional, loose bck pillow and seat cushion, tailored skirt
	6,15,24	scroll arm, tight back and seat, straight wooden legs, no skirt
C	7,16,25	wing, tight back and loose seat cushion, no skirt
	8,17,26	traditional, loose back pillow and seat cushion, tailored skirt
	9,18,27	traditional, loose back pillow and seat cushion, tailored skirt

TABLE 2
DUST COVER CONSTRUCTIONS

CHAIR NO.	LAYER NO.	CONSTRUCTION	FIBER CONTENT	FABRIC WEIGHT oz/yd²	FIRE RESISTANT INTERLINER	TIME OF IGNITION seconds
1**	1	nonwoven				25
	2	woven				
2	1	nonwoven	thermoplastic	1.2		15
	2	woven	thermoplastic	6.5		
3	1	nonwoven	thermoplastic	1.6		no ignition
	2	wood				
4	1	woven	cellulosic/ thermoplastic	4.1		5
	2	woven	cellulosic/ thermoplastic	4.1		
5	1	woven	cellulosic/ thermoplastic	4.0		5
6	1	woven	cellulosic/ thermoplastic	3.0		5
	2	woven	thermoplastic	5.6		
7	1	nonwoven	thermoplastic	1.4		5
	2	woven	thermoplastic	5.2		
8	1	nonwoven	thermoplastic	1.5		5
	2	woven	thermoplastic	4.8		
9	1	nonwoven	thermoplastic	1.1		5
	2	woven	thermoplastic	4.6		
10	1	nonwoven	thermoplastic	1.6		no ignition
	2	nonwoven	aramid	2.1	X	
	3	wood				

NOTE: TABLE 2 CONTINUES ON NEXT TWO PAGES.
**CHAIR LEFT INTACT, MAY BE USED IN FURTHER TESTING.

TABLE 2 CONTINUED
DUST COVER CONSTRUCTIONS

CHAIR NO.	LAYER NO.	CONSTRUCTION	FIBER CONTENT	FABRIC WEIGHT oz/yd²	FIRE RESISTANT INTERLINER	TIME OF IGNITION seconds
11	1	nonwoven	thermoplastic	1.5		no ignition
	2	nonwoven	aramid	2.0	X	
	3	woven	thermoplastic	6.7		
12	1	nonwoven	thermoplastic	1.3		5
	2	woven	thermoplastic	6.6		
13	1	woven	cellulosic/ thermoplastic	4.0		15
	2	woven	glass	4.4	X	
14	1	woven	cellulosic/ thermoplastic	4.1		5
	2	woven	glass	4.4	X	
15	1	woven	cellulosic/ thermoplastic	2.9		5
	2	woven	thermoplastic	5.0		
16	1	nonwoven	thermoplastic	1.2		no ignition
	2	knit	glass/spandex /modacrylic	6.0	X	
	3	nonwoven	thermoplastic	1.2		
	4	woven	thermoplastic	5.4		
17	1	nonwoven	thermoplastic	1.1		5
	2	knit	glass/spandex /modacrylic	5.1	X	
	3	woven	thermoplastic	5.0		
18	1	nonwoven	thermoplastic	1.1		no ignition
	2	knit	glass/spandex /modacrylic	5.7	X	
	3	woven	thermoplastic	4.8		

TABLE 2 CONTINUED
DUST COVER CONSTRUCTIONS

CHAIR NO.	LAYER NO.	CONSTRUCTION	FIBER CONTENT	FABRIC WEIGHT oz/yd²	FIRE RESISTANT INTERLINER	TIME OF IGNITION seconds
19	1	nonwoven	thermoplastic	3.0		5
	2	wood				
20**	1	nonwoven				5
	2	woven				
21	1	nonwoven	thermoplastic	1.4		15
	2	woven	thermoplastic	6.3		
22	1	woven	cellulosic/ thermoplastic	4.0		15
23	1	woven	celllulosic/ thermoplastic	4.2		5
24	1	woven	cellulosic/ thermoplastic	2.8		5
	2	woven	thermoplastic	5.6		
25	1	nonwoven	thermoplastic	1.4		5
	2	woven	thermoplastic	5.2		
26	1	nonwoven	thermoplastic	1.3		25
	2	woven	thermoplastic	5.0		
27	1	nonwoven	thermoplastic	1.2		15
	2	woven	thermoplastic	4.7		

**CHAIR LEFT INTACT, MAY BE USED IN FURTHER TESTING.

TABLE 3

SMALL SCALE DUST COVER TESTS

CHAIR NO.	MATERIALS TESTED				RESULTS
	DUST COVER FABRIC	INTERLINER	STRUCTURAL LAYER	WOOD	
3	X				DNI
8	X		X		IGN of structural fabric at 15 sec
10	X				DNI
	X	X			DNI
12	X				DNI
			X		IGN
	X		X		IGN
13	X	X		X (no space)	DNI
	X	X		X (15 sec.only) 1/16 in.space	DNI
	X	X		X (15 sec.only) 1/8 in. space	IGN
	X	X			IGN
16	X				DNI
17	X				DNI
	X	X			DNI
	X	X	X (5 & 15 sec)		DNI
19	X				DNI
	X			X (no space)	DNI
	X			X (15 sec.only) 1/16 in.space	DNI
	X			X (25 sec only) 1/8 in. space	DNI

NOTE: IGNITION TIMES UNLESS NOTED WERE 5, 15 AND 25 SECONDS.

TABLE 4
SKIRT CONSTRUCTIONS

CHAIR NO.	CHAIR TYPE	FIBER CONTENT AND FABRIC WEIGHT (oz/yd²)		
		UPHOLSTERY FABRIC	STIFFENER	LINING
1**	CA	cellulosic/8.4		
2	CA	thermoplastic/10.8	cellulosic/ thermoplastic blend/5.1	cellulosic/2.3
3	CA	NO SKIRT		
4	CA	cellulosic/8.7	thermoplastic/5.8	cellulosic/ thermoplastic blend/4.7
5	CA	cellulosic/ thermoplastic blend/8.5	thermoplastic/5.0	cellulosic/ thermoplastic blend/4.6
6	CA	NO SKIRT		
7	CA	NO SKIRT		
8	CA	cellulosic/7.5	thermoplastic/5.0	cellulosic/ thermoplastic blend/3.0
9	CA	cellulosic/9.4	thermoplastic/4.6	cellulosic/ thermoplastic blend/3.0
10	UK	NO SKIRT		
11**	UK	cellulosic/8.4		
12	UK	thermoplastic/10.8	cellulosic/ thermoplastic blend/4.4	cellulosic/ thermoplastic blend/3.5
13	UK	cellulosic/8.7	thermoplastic/5.4	cellulosic/ thermoplastic blend/4.5
14	UK	cellulosic/ thermoplastic blend/8.5	thermoplastic/5.1	cellulosic/ thermoplastic blend/3.8
15	UK	NO SKIRT		
16	UK	NO SKIRT		

NOTE: TABLE 4 CONTINUES ON NEXT PAGE.
ALL SKIRTS IGNITED IN 5 SECONDS.
** CHAIRS LEFT INTACT, MAY BE USED IN FURTHER TESTING.

TABLE 4 CONTINUED

SKIRT CONSTRUCTIONS

CHAIR NO.	CHAIR TYPE	FIBER CONTENT/FABRIC WEIGHT (oz/yd²)		
		UPHOLSTERY FABRIC	STIFFENER	LINING
17	UK	cellulosic/7.5	thermoplastic/4.7	cellulosic/ thermoplastic blend/3.1
18	UK	cellulosic/9.8	thermoplastic/5.3	cellulosic/ thermoplastic blend/3.1
19	UFAC	NO SKIRT		
20**	UFAC	cellulosic/8.4		
21	UFAC	thermoplastic/11.4	cellulosic/ thermoplastic/5.2	cellulosic/2.4
22	UFAC	cellulosic/9.2	thermoplastic/5.0	cellulosic/ thermoplastic/5.4
23	UFAC	cellulosic/8.7	thermoplastic/5.0	cellulosic/ thermoplastic/4.6
24	UFAC	NO SKIRT		
25	UFAC	NO SKIRT		
26	UFAC	cellulosic/7.2	thermoplastic/5.4	cellulosic/ thermoplastic/3.8
27	UFAC	cellulosic/9.4	thermoplastic/5.0	cellulosic/ thermoplastic/3.1

** CHAIR LEFT INTACT, MAY BE USED IN FURTHER TESTING.

TABLE 5

FULL SCALE OPEN FLAME TESTS - SEATING AREA

CHAIR NO.	LOCATION	IGNITION TIME (seconds)	AFTERFLAME TIME (seconds)	FILLING EXPOSED
1	back	15	62	thermoplastic fill
	side	15	106	thermoplastic fill
2	back	15	59	interior fabric thermoplastic fill
	side	15	74	thermoplastic fill
3	back	15	44	thermoplastic fill and foam
	side	15	17	thermoplastic fill
4	back	15	119	interior fabric, feathers and fiber
	side	15	117	thermoplastic fill and foam
5	back	15	65	interior fabric, thermoplastic fill
	side	5	81	thermoplastic fill and foam
6	back	15	68	thermoplastic fill and foam
	side	15	33	thermoplastic fill
7	back	20	61	thermoplastic fill and foam
	side	20	110	thermoplastic fill and foam
8	back	15	47	thermoplastic fill and foam
	side	15	73	thermoplastic fill and foam
9	back	15	75	thermoplastic fill
	side	15	61	thermoplastic fill
10	back	5	83	fire resistant interliner
	side	15	12	fire resistant interliner

NOTE: TABLE 5 CONTINUES ON NEXT TWO PAGES.

TABLE 5 CONTINUED

FULL SCALE OPEN FLAME TESTS - SEATING AREA

CHAIR NO.	LOCATION	IGNITION TIME (seconds)	AFTERFLAME TIME (seconds)	FILLING EXPOSED
11	back	15	52	fire resistant interliner
	side	15	47	fire resistant interliner
12	back	5	150	fire resistant interliner
	side	15	74	fire resistant interliner
13	back	15	147	fire resistant interliner
	side	15	150	fire resistant interliner
14	back	15	67	fire resistant interliner
	side	15	46	fire resistant interliner
15	back	15	67	fire resistant interliner
	side	15	37	fire resistant interliner
16	back	20	110	fire resistant interliner
	side	20	45	fire resistant interliner
17	back	15	60	fire resistant interliner
	side	15	122	fire resistant interliner
18	back	15	50	fire resistant interliner
	side	15	108	fire resistant interliner
19	back	15	37	thermoplastic fill
	side	15	34	thermoplastic fill and foam

NOTE: TABLE 5 CONTINUES ON NEXT PAGE.

TABLE 5 CONTINUED

FULL SCALE OPEN FLAME TESTS - SEATING AREA

CHAIR NO.	LOCATION	IGNITION TIME (seconds)	AFTERFLAME TIME (seconds)	FILLING EXPOSED
20	back	15	5	interior fabric and thermoplastic fill
	side	15	44	thermoplastic fill
21	back	15	56	interior fabric and thermoplastic fill
	side	15	98	thermoplastic fill
22	back	20	292	interior fabric, feathers and fill
	side	15	150	thermoplastic fill and foam
23	back	15	69	interior fabric and thermoplastic fill
	side	15	67	thermoplastic fill and foam
24	back	15	56	thermoplastic fill and foam
	side	15	32	thermoplastic fill and foam
25	back	20	125	thermoplastic fill and foam
	side	20	75	thermoplastic fill
26	back	15	110	interior fabric and thermoplastic fill
	side	15	62	thermoplastic fill and foam
27	back	15	67	interior fabric
	side	15	62	interior fabric, thermoplastic fill

TABLE 6

RESULTS OF CAL 117 COMPONENT TESTS

CHAIR NUMBER	LOCATION/FILLING TESTED	PASSED/FAILED
1	seat/foam	passed
	side/foam	passed
	barrier/filling	passed
	pillow/filling	passed
2	seat/foam	failed (unaged)
	side/filling	passed
	barrier/filling	passed
	pillow/filling	passed
3	seat/foam	passed
	side/foam	passed
	barrier/filling	passed
	pillow/filling	passed
4	seat/foam	passed
	back/foam	failed (aged)
	side/foam	passed
	armrest/foam	passed
	barrier/filling	passed
	back/side/filling	failed
	int. fabric/pillow	failed
5	seat/foam	failed (unaged)
	back/foam	passed
	side/foam	passed
	back/side/filling	failed
	pillow/filling	passed
	int. fabric/barrier	passed

NOTE: TABLE 6 CONTINUES ON NEXT PAGE.

TABLE 6 CONTINUED

RESULTS OF CAL 117 COMPONENT TESTS

CHAIR NUMBER	LOCATION/FILLING TESTED	PASSED/FAILED
6	seat/foam	passed
	back/foam	passed
	side/foam	passed
	armrest/foam	passed
	barrier/filling	passed
	back/side/filling	failed
7	seat/foam	failed (unaged)
	back/foam	passed
	side/foam	failed(aged/unaged)
	back/side/filling	passed
	int.fabric/barrier	passed
8	seat/foam	passed
	back/foam	passed
	side/foam	passed
	armrest/foam	failed(aged/unaged)
	barrier/filling	passed
	back/side/filling	passed
	pillow filling	passed
	int. fabric/barrier	passed
9	seat/foam	passed
	armrest/foam	passed
	side/back/filling	passed
	int. fabric/barrier	passed
	int. fabric/pillow	passed

TABLE 7

RESULTS OF BS 5852 COMPOSITE TESTS

CHAIR NO.	LOCATION TESTED	UPHOLSTERY FABRIC SPLIT* (seconds)	VERTICAL CHAR/END OF TEST (mm)	TYPE/CONDITION OF INTERLINER AFTER TESTING
10	back/seat	16	286	woven glass/charred
	side/seat	37	296	nonwoven aramid/charred
11	back/seat	85	282	woven glass/charred
	side/seat	83	266	nonwoven aramid/charred
12	back/seat	10	242	woven glass/charred
	side/seat	5	280	nonwoven aramid/charred
13	back/seat	130	217	woven glass/charred
	side/seat	70	252	woven glass/charred
14	back/seat	13	287	woven glass/charred
	side/seat	7	287	woven glass/charred
15	back/seat	15	264	woven glass/charred
	side/seat	8	263	woven glass/charred
16	back/seat	98**	279	woven glass/charred
	side/seat	did not split	287	knit glass blend/charred
17	back/seat	62**	274	woven glass/charred
	side/seat	did not split	149	knit glass blend/charred
18	back/seat	73**	176	woven glass/charred
	side/seat	90***	279	knit glass blend/ charred

*average of 3 tests. **one mockup did not split.
*** 2 mockups did not split.

TABLE 8

PERFORMANCE OF FIRE RESISTANT INTERLINER FABRICS AFTER FIVE MINUTE EXPOSURE TO FLAME

CONSTRUCTION	RESULTS
knit interliner over U.K. foam	interliner charred; foam charred, melted
nonwoven interliner over U.K. foam	interliner charred; foam charred, melted
knit interliner over CA foam	interliner broke down; foam burned, melted where exposed to flame
knit interliner over CA fiberfill/foam combination	interliner charred; fiberfill burned through, foam charred, melted
nonwoven interliner over CA foam	interliner charred; foam charred, melted
nonwoven interliner over CA fiberfill/foam combination	interliner charred; fiberfill burned through, foam charred, melted
knit interliner over UFAC standard foam	interliner charred; foam charred, melted
nonwoven interliner over UFAC standard foam	interliner charred; foam charred, melted

TABLE 9

TYPES OF UPHOLSTERY AND INTERLINER FABRICS

	UPHOLSTERY FABRIC				FIRE RESISTANT INTERLINER FABRIC(S)							
Chair No.	Fiber Content	Construc-tion	Back Coating	Weight oz/yd²	Fiber Content	Construc-tion	Weight oz/yd²	Location	Fiber Content	Construc-tion	Weight oz/yd²	Location
1	cellulosic	woven damask	No	8.4								
2	thermoplastic	woven napped	Yes	10.8								
3	cellulosic/ thermoplastic blend	woven dobby	No	7.4								
4	cellulosic	woven twill	No	8.7								
5	cellulosic/ thermoplastic blend	woven plain	Yes	8.5								
6	cellulosic/ thermoplastic blend	woven damask	Yes	8.6								
7	cellulosic	woven damask	No	13.0								
8	cellulosic	woven damask	No	7.5								
9	cellulosic	woven basketweave	No	9.4								
10	cellulosic/ thermoplastic blend	woven dobby	No	7.4	glass	woven	4.3	pillow and seat cushion	aramid	non woven	2.1	sides and dust cover
11	cellulosic	woven damask	No	8.4								

NOTE: TABLE 9 CONTINUES ON NEXT TWO PAGES.

TABLE 9 CONTINUED
TYPES OF UPHOLSTERY AND INTERLINER FABRICS

	UPHOLSTERY FABRIC				FIRE RESISTANT INTERLINER FABRIC(S)							
Chair No.	Fiber Content	Construc-tion	Back Coating	Weight oz/yd²	Fiber Content	Construc-tion	Weight oz/yd²	Location	Fiber Content	Construc-tion	Weight oz/yd²	Location
12	thermoplastic	woven napped	Yes	10.8	glass	woven	4.3	pillow and seat cushion	aramid	non woven	2.1	sides
13	cellulosic	woven twill	No	8.7	glass	woven	4.4	pillow, seat cushion sides and dust cover				
14	cellulosic/ thermoplastic blend	woven plain	Yes	8.5	glass	woven	4.4	pillow, seat cushion sides and dust cover				
15	cellulosic/ thermoplastic blend	woven damask	Yes	8.6	glass	woven	4.4	back, seat cushion sides				
16	cellulosic	woven damask	No	13.0	glass	woven	4.4	seat cushion	glass/ spandex/ modacrylic	knit	5.4	back, sides, dustcover
17	cellulosic	woven damask	No	7.5	glass	woven	4.4	seat cushion	glass/ spandex/ modacrylic	knit	5.6	pillow, sides, dustcover
18	cellulosic	woven basketweave	No	9.8	glass	woven	4.4	pillow and seat cushion	glass/ spandex/ modacrylic	knit	5.7	sides, dustcover

NOTE: TABLE 9 CONTINUES ON NEXT PAGE.

TABLE 9 CONTINUED
TYPES OF UPHOLSTERY AND INTERLINER FABRICS.

	UPHOLSTERY FABRIC				FIRE RESISTANT INTERLINER FABRIC(S)							
Chair No.	Fiber Content	Construc-tion	Back Coating	Weight oz/yd²	Fiber Content	Construc-tion	Weight oz/yd²	Location	Fiber Content	Construc-tion	Weight oz/yd²	Location
19	cellulosic/ thermoplastic blend	woven dobby	No	7.3								
20	cellulosic	woven damask	No	8.4								
21	thermoplastic	woven napped	Yes	11.4								
22	cellulosic	woven twill	No	9.2								
23	cellulosic/ thermoplastic blend	woven plain	Yes	8.5								
24	cellulosic/ thermoplastic blend	woven damask	Yes	8.4								
25	cellulosic	woven damask	No	13.6								
26	cellulosic	woven damask	No	7.2								
27	cellulosic	woven basketweave	No	9.4								

TABLE 10
TYPES OF FILLING MATERIALS

CHAIR NO.	BACK	PILLOW	SIDE	BARRIER	SEAT
1**					
2	thermoplastic fill	thermoplastic fill	thermoplastic fill	thermoplastic fill	foam
3	thermoplastic fill/foam	thermoplastic fill	thermoplastic fill/foam	thermoplastic fill	foam
4	thermoplastic fill/foam	thermoplastic feather blend	thermoplastic fill/foam	thermoplastic	foam
5	thermoplastic fill/foam	thermoplastic fill	thermoplastic fill/foam	thermoplastic feather blend	foam
6	thermoplastic fill/foam	N/A	thermoplastic fill/foam	thermoplastic fill	foam
7	thermoplastic fill/foam	N/A	thermoplastic fill/foam	thermoplastic feather blend	foam
8	predominately thermoplastic fill/foam	thermoplastic	predominately thermoplastic fill/foam	thermoplastic fill/foam	thermoplastic fill/foam
9	thermoplastic fill	thermoplastic feather blend	thermoplastic	thermoplastic feather blend	foam
10	location not tested	thermoplastic feather blend	thermoplastic fill/foam	thermoplastic fill	foam
11**					
12	thermoplastic fill	thermoplastic fill	thermoplastic fill/foam	thermoplastic fill	foam
13	location not tested	thermoplastic feather blend	thermoplastic fill/foam	thermoplastic fill	foam
14	location not tested	thermoplastic fill	thermoplastic fill/foam	thermoplastic feather blend	foam
15	thermoplastic fill/foam	N/A	thermoplastic fill/foam	thermoplastic fill	foam
16	thermoplastic fill/foam	N/A	thermoplastic fill/foam	thermoplastic feather blend	foam
17	location not tested	thermoplastic fill	thermoplastic fill/foam	thermoplastic feather blend	thermoplastic fill/foam
18	location not tested	thermoplastic feather blend	thermoplastic fill	thermoplastic feather blend	foam
19	predominately thermoplastic fill/foam	thermoplastic fill	predominately thermoplastic fill/foam		foam

NOTE: TABLE 10 CONTINUES ON NEXT PAGE.
** CHAIRS LEFT INTACT, MAY BE USED IN FURTHER TESTING.

TABLE 10 CONTINUED

TYPES OF FILLING MATERIALS

CHAIR NO.	BACK	PILLOW	SIDE	BARRIER	SEAT
20**					
21	thermoplastic fill	thermoplastic fill	thermoplastic fill	thermoplastic fill	foam
22	thermoplastic fill/foam	thermoplastic feather blend	thermoplastic fill/foam	thermoplastic fill	foam
23	predominately thermoplastic fill/foam	thermoplastic	predominately thermoplastic fill/foam	thermoplastic feather blend	foam
24	thermoplastic fill/foam	N/A	thermoplastic fill/foam	thermoplastic fill	foam/ thermoplastic fill
25	predominately thermoplastic fill/foam	N/A	thermoplastic fill/foam	thermoplastic feather blend	foam
26	predominately thermoplastic fill/foam	thermoplastic	predominately thermoplastic fill/foam	thermoplastic feather blend	thermoplastic fill/foam
27	predominately thermoplastic fill	thermoplastic feather blend	predominately thermoplastic fill/foam	thermoplastic feather blend	foam

** CHAIR LEFT INTACT, MAY BE USED IN FURTHER TESTING

Appendix A

RESEARCH TEST PROTOCOL FOR SMALL OPEN-FLAME IGNITABILITY OF FULL SCALE UPHOLSTERED FURNITURE

June 12, 1995

TABLE OF CONTENTS

GENERAL

1. Scope
2. Purpose

PERFORMANCE

3. Safety Precautions
4. Test Apparatus
5. Atmospheres for Conditioning and Testing
6. Dust Cover Test Procedure
7. Skirt Test Procedure
8. Seating Area Test Procedure

REPORT

9. General

GENERAL

1. Purpose

The purpose of this test protocol is to evaluate the ability of items of conventional residential upholstered furniture to resist ignition from small open-flame ignition sources. The test method is not intended to be used as the basis for a standard. However, information obtained from tests conducted using this protocol will be useful as CPSC proceeds to develop small scale ignition tests.

2. Scope

This research protocol provides a test method to assess the ability of full scale items of residential upholstered furniture to resist ignition when subjected to a small open-flame ignition source (e.g. match, lighter, or candle). This test does not cover ignition caused by arson/incendiary acts, larger open-flame ignition sources, or tobacco products.

The research protocol focuses on three targeted areas of a full scale upholstered furniture assembly that are most likely to be subjected to small-open flame ignition sources as a result of an accident or child-play. These targeted areas are:

1. Dust Cover
2. Skirt (If applicable)
3. Seating Area

PERFORMANCE

3.0 Safety Precautions

3.1 Flammability testing can result in a large generation of heat and other products of combustion. Extreme caution is necessary.

3.2 An adequate means of extinguishment shall be provided for the test specimens, bearing in mind that full scale testing can result in hazardous conditions.

3.3 A self contained breathing apparatus and necessary training for test personnel shall be provided.

4.0 Test Apparatus

4.1 Test Platform: a platform shall be constructed to raise the specimen to facilitate observations of skirt and dust cover tests. **(See Figure 1)**

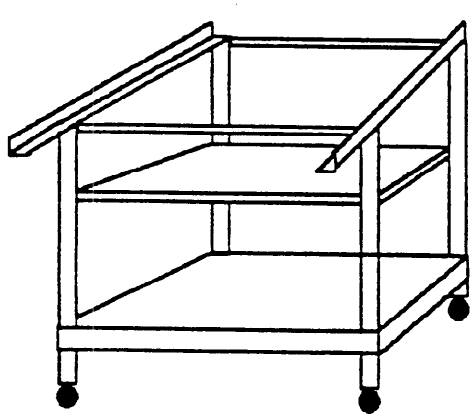

Figure 1: Test Platform

4.2 Test Enclosure: The test enclosure shall consist of either a room with a volume greater than 20 m^3 (65 ft^3) (which contains adequate oxygen for testing), or a smaller enclosure with adequate airflow. Inlet and extraction systems shall provide an air flow rate of less than 0.2 m/s (0.66 ft/s) in the proximity of the

test specimen to provide adequate oxygen without disturbing burning behavior (SECTION 6.2, BS 5852).

4.3 Ignition Source: The ignition source shall be a butane gas match-flame equivalent.

NOTE: Real life ignition sources burn in a relatively irreproducible manner and the use of a variable source is impractical in standard tests because it can give non-repeatable results (K.T. Paul, 1987).

A burner tube consisting of a length of stainless steel tube (D_o = 8 mm (.31 in), D_i = 6.5 mm (.26 in) , L = 200 mm (7.9 in)) is connected by plastic tubing to a cylinder containing butane via a flowmeter, fine control valve, on-off valve (optional), and cylinder regulator providing outlet pressure of nominal 2.8 kpa. **(See Figure 2)**

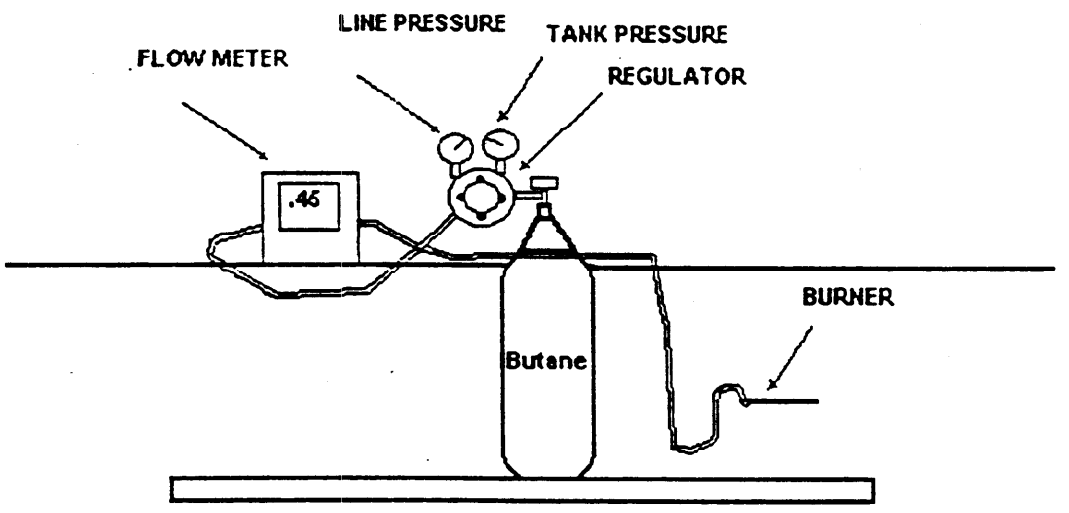

Figure 2: Gas/Burner Arrangement

The flowmeter shall be calibrated to supply a butane gas flow rate at 25° C of **45 ml/min ± 2**. The flexible tubing connecting the output of the flowmeter to the burner tube shall be 2.5 (7.6) - 3.0 (9.1 ft) m in length with D_i = 7 mm (.28 in). (SECTION 6.4 BS 5852)

(This corresponds to a flame height of approximately 35 mm (1.4) at 25° C (77° F)

4.4 Gas Flow Control: It is essential that the gas flow rate to the burner complies with the flow rate specified. To ensure gas equilibration, the temperature difference of the testing area where the gas is stored and the location of the burner should not exceed 15° C (60° F).

The flow rate of the gas must also be carefully measured. Direct reading flowmeters, even those obtained with a direct gas calibration, need to be checked when initially installed and also at regular intervals during testing by a method capable of measuring the absolute gas flow at the burner tube. This can be accomplished by connecting the burner tube with a short length of tubing (with D_i = 7 mm (.28 in) to a soap bubble flowmeter, such that the upward passage of a soap film meniscus in a glass tube of calibrated volume (e.g. a burette) over a known period of time gives an absolute measurement of the flow. (SECTION 6.4, BS 5852)

4.5 Timer: Stop watches or other timing devices that measure to 0.5 second shall be used to measure flame application, burning time of the specimens and flame time of portions of the specimen that break away or melt/drip.

4.6 Video Equipment: As appropriate, provide necessary equipment for video taping the experiments.

4.7 Ruler: Provide a ruler, reading 1 mm/1 inch increments, for use in measuring flame height and char length.

5.0 Atmospheres for Conditioning and Testing

5.1 Conditioning : The specimens to be tested shall be conditioned for at least 24 hours immediately before the tests in the following atmosphere:
- Temperature: 25 ± 2° C (77± 2°)
- Relative Humidity: Less than 55 %

5.2 Testing: Conditions of the test room should meet the requirements of Section 5.1, otherwise testing shall be initiated within **10 minutes** after the specimens are removed from the conditioning room.

6.0 Dust Cover Test Procedures

6.1 Preparation:

6.1.1 Ensure that a means of extinguishment is close at hand.

6.1.2 Place specimen on the test platform.

6.1.3 Visually inspect the samples to ensure there is no deformation in the dust cover.

6.1.4 If the chair has a skirt, pin the skirt to the outside of the chair to facilitate testing and observations..

6.2 Ignition Source Application:

6.2.1 Light the gas emerging from the burner tube, adjust the gas flow rate (specified in section 4-4) and allow the flame to stabilize for at least 2 minutes.

6.2.2 Position the burner by hand vertically such that the tip of the flame contacts the dust cover 5 cm (2 inches) from the inside edge of the front frame for **5 seconds**. Terminate the ignition process by removing the burner from the test specimen.**(SEE FIGURE 3a & 3b)**

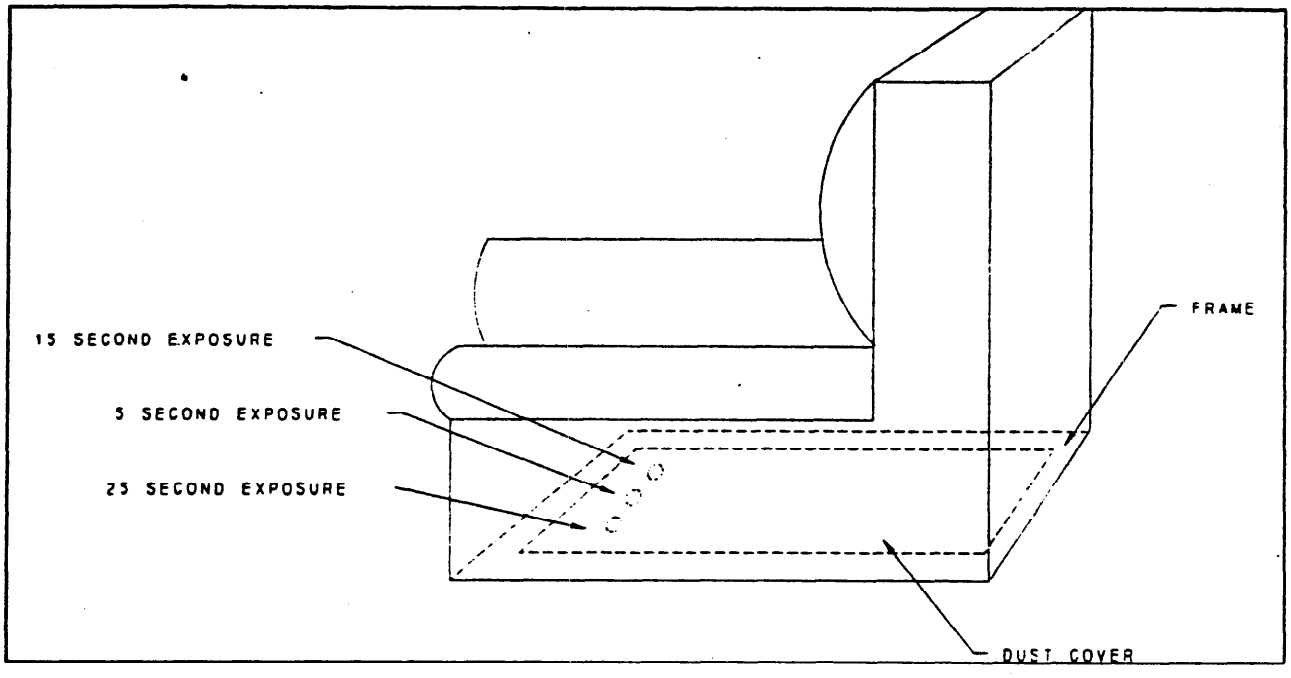

Figure 3a Side View of Chair

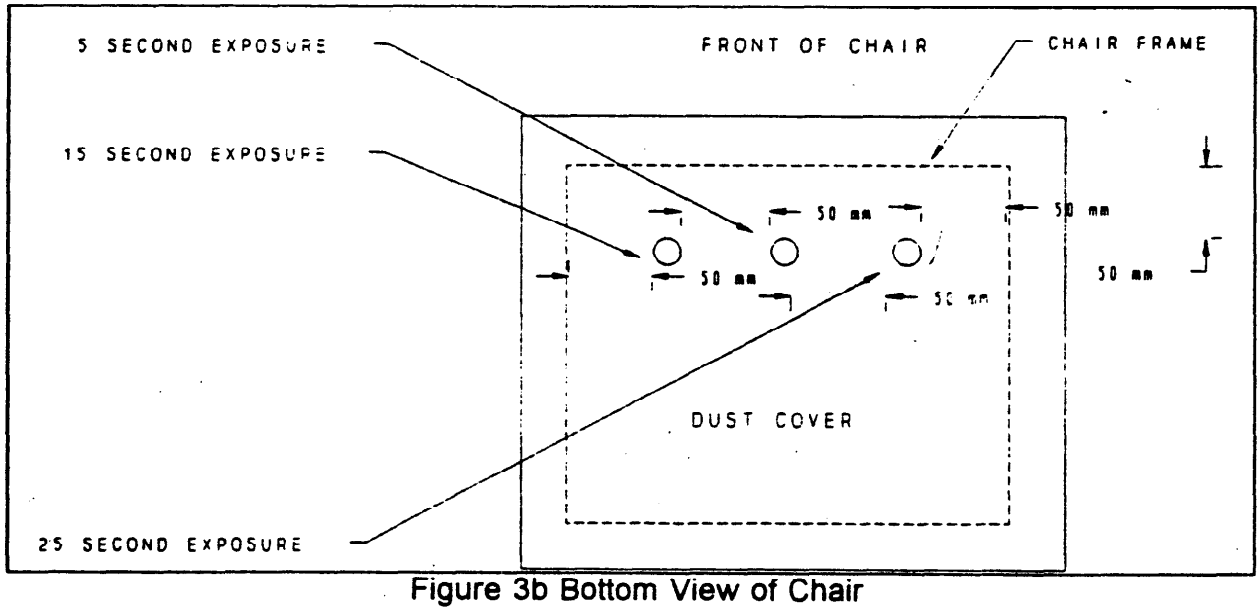

Figure 3b Bottom View of Chair

6.3 Observations:

6.3.1 If sustained ignition of the dust cover occurs after the burner is removed, continue to Section 6.3.2 Observations of burning characteristics. Otherwise record "no ignition for 5 second exposure". Then apply burner in accordance with Section 6.2.2 in another location for **15 seconds**. If ignition does not occur with second exposure, record "no ignition for 15 second exposure". Then apply burner for **25 seconds**. If ignition does not occur with the third exposure, record "No Ignition of Dust Cover" and continue with next test area.

6.3.2 Observe and record the burning characteristics of the specimen including:

1. The total flame time the furniture continues to burn after the flame is removed.

2. Occurrence and duration of flaming dripping and/or melting pieces that continue to burn once they reach the base of the platform.

3. To what extent did other components of the furniture get involved in the fire (Does the ignition of the dust cover result in ignition of other parts of the chair?).

6.3.3 When the dust cover ignites another portion of specimen or when visible flaming stops, extinguish the specimen and remove damaged materials to ensure all burning/smoldering has stopped. Next measure the widest portion (w) of the char on the dust cover. (**See Figure 4**)

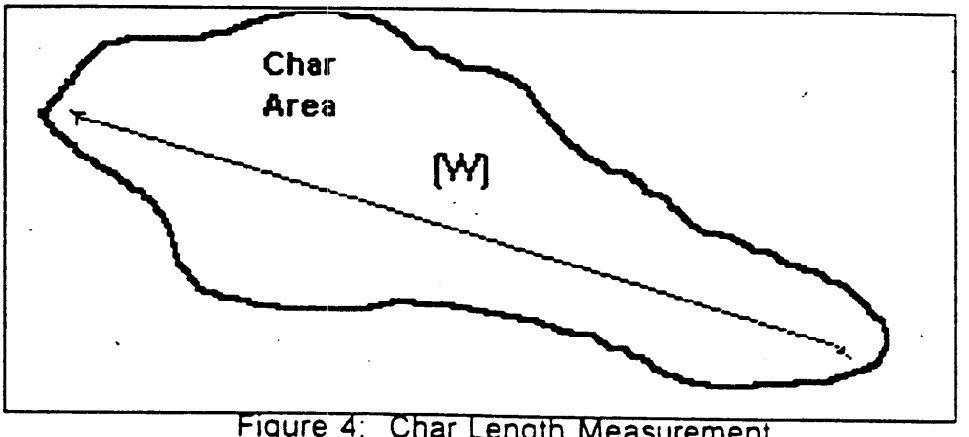

Figure 4: Char Length Measurement

7.0 Skirt Test Procedures

7.1 Preparation:

7.1.1 Ensure that a means of extinguishment is close at hand.

7.1.2 Remove pins from front of the skirt, keep remaining pins in place to facilitate observations for the bottom of chair.

7.1.3 Visually inspect the samples to ensure there are no deformations in the skirt fabric.

7.1.4 Record the height of the skirt.

7.2 Ignition Source Application:

7.2.1 Light the gas emerging from the burner tube, adjust the gas flow rate (specified in section 4-4) and allow the flame to stabilize for at least 2 minutes.

7.2.2 Position the burner by hand vertically under the skirt such that the tip of the flame contacts the bottom edge of the skirt **5 seconds**, then terminate the ignition process by removing the burner away from the test specimen.

7.3 Observations:

7.3.1 If sustained ignition of the skirt occurs after the burner is removed, continue to Section 7.3.2 Observation of burning characteristics. Otherwise record "no ignition for 5 second exposure". Then apply burner in accordance with Section 7.2.2 in another location for **15 seconds**. If ignition does not occur with second exposure, record "no ignition for 15 second exposure". Then apply burner for **25 seconds**. If ignition does not occur with third exposure, record "No Ignition of Skirt" and continue with next test area.

7.3.2 Observe and describe the burning characteristics of the specimen including:

1. The total flame time the furniture continues to burn after the flame

is removed.

2. Occurrence and duration of flaming dripping and/or melting pieces that continue to burn once they reach the base of the platform.

3. To what extent did other components of the furniture get involved in the fire (Does the ignition of the skirt result in ignition of other parts of the chair?).

7.3.3 Stop test when any of the these conditions occur and record the condition:

1. Visible burning stops

2. Char reachs the top of the skirt

3. When the skirt ignites another portion of the specimen

Extinguish the specimen to ensure all burning/smoldering has stopped and measure the vertical distance of flame progression from edge of skirt.

8.0 Seating Area Test Procedures

8.1 Preparation:

8.1.1 Ensure that a means of extinguishment is close at hand.

8.1.2 Visually inspect the samples to ensure there are no deformations in the seat cover fabric.

8.1.3 Make a horizontal line 28 cm (11 inches) from the bottom of seat/back crevice and 14 cm (5.5 inches) from the bottom of the arm/seat crevice. **(SEE FIGURE 5)**

8.1.4 Describe and photograph the geometry of the crevice.

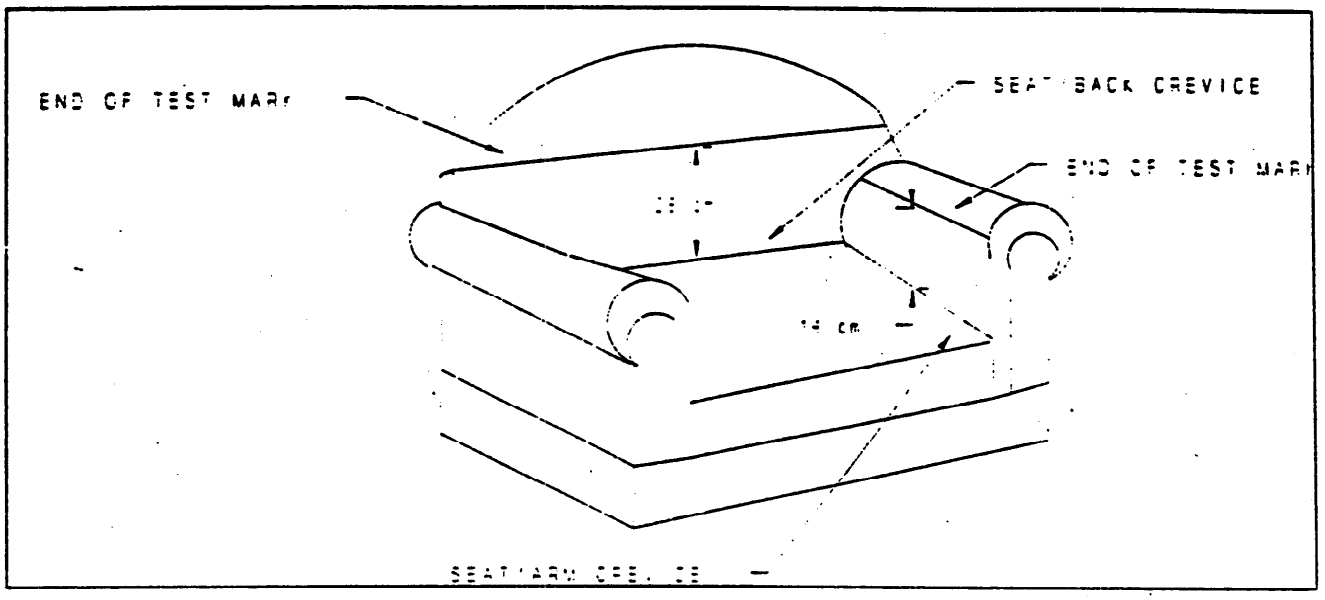

Figure 5 Seating Area Test Sample Preparation

8.2 Ignition Source Application:

8.2.1 Light the gas emerging from the burner tube, adjust the gas flow rate (specified in section 4-4) and allow the flame to stabilize for at least 2 minutes.

8.2.2 Position the burner tube axially by hand such that the flame is in contact with the junction between the seat and the back for **5 seconds** then terminate the ignition process by removing the burner from the test piece. Ensure that the burner flame is not less than 50 mm from the nearest side, edge, or from any marks left by any previous test.

8.3 Observations:

8.3.1 If sustained ignition occurs of the seating area after the burner is removed, continue to Section 8.3.2 Observations of burning characteristics. Otherwise record "no ignition for 5 second exposure". Then apply burner in accordance with Section 8.2.2 for **15 seconds**. If

ignition does not occur with second exposure, record "no ignition for 15 second exposure. Then apply burner for **20 seconds.** If ignition does not occur with the third exposure, record "no Ignition for 20 second exposure". Then apply burner for **25 seconds**. If ignition does not occur with fourth exposure, record "no ignition for 25 second exposure", and apply burner for **50 seconds**. If ignition does not occur with fifth exposure, record "no ignition of the seat" and continue with next sample.

8.3.2 Observe and describe the burning characteristics of the specimen including:

1. The total flame time the furniture continues to burn after the flame is removed.

2. Integrity of cover fabric(does fabric break open and expose filling material? Thermoplastics tend to exhibit this behavior more often then cellulosic)

8.4 Stop test when any of the these conditions occur and record the condition:

1. Visible burning stops

2. Char reaches the 28 cm (11 inch) mark (14 cm (5.5 inch) mark for arm/seat junction).

8.5 Repeat the Seating Area Test for the arm/seat junction.

8.6 Final Examination:

8.4.1 Smoldering of the test specimen can occur undetected from exterior of the sample. Immediately after the test procedure, dismantle the specimen and carefully examine it internally for progressive smoldering ignition. If progressive smoldering is found, extinguish the test assembly and remove all burned/charred materials.

8.4.2 As safety precaution, ensure that any smoldering is fully stopped before leaving the sample unattended.

REPORT

9.0 General

9.1 The test report shall include the following information in a tabular format:

9.1.1 Ambient conditions (temperature, relative humidity)

9.1.2 Description of the specimen being tested

9.1.3 Observations of the burning characteristics

REFERENCES

1. BS 5852 Fire Tests for Furniture

2. K. T. Paul, S.D. Christian, " Standard Flaming Ignition Sources for Upholstered Composites, Furniture and Bed Assembly Test". Journal of Fire Sciences, Vol 5, No.3. pp 178-210.

3. Federal Register, Vol. 59, No. 114.

Appendix B

United States
CONSUMER PRODUCT SAFETY COMMISSION
Washington, D.C. 20207

MEMORANDUM

DATE: November 9, 1995

TO : File

Through: Robert T. Garrett, Acting Director LSEL
James F. Hoebel, Acting Director, ESME

FROM : John R. Murphy and Rikki Khanna, ESME

SUBJECT: Match Burn Times

The Directorate for Engineering Sciences (ES) and The Directorate for Laboratory Sciences, Division of Engineering Laboratory (LSEL) recently conducted some experiments on burn times of small open-flame ignition sources.

The purpose of the experiments was to help determine appropriate flame exposure times for full scale and bench scale upholstered furniture tests.

Experiments to record burn times for dropped or hand-held matches and disposable cigarette lighters were performed in May 1995. Wooden matches, kitchen matches (a longer wooden match), and two different book matches were evaluated.

MATCHES

The burn times of the matches were recorded for the following test configurations designed to mimic possible ignition scenarios:

- Dropped from a 18-inch height onto a glass fiber board
- Hand held horizontally with the match parallel to the floor
- Hand held at 60° from horizontal with burning match tip up
- Hand held vertically with the match perpendicular to the floor
- Dropped from an 18-inch height onto a piece of #10 duck cloth
- Match hand held next to a vertical glass fiber board
- Match hand held under a horizontal glass fiber board
- Match hand held under a glass fiber board tilted at 45°

The glass fiber board was intended to simulate upholstered furniture in each of the last three conditions.

Tests were conducted in a room having an air temperature of 20°C (68° F) and a relative humidity of 58%. Twenty-five trials were conducted for each test condition and the average burn times were calculated. Four types of matches were used in the experiments to represent a variety of matches found in households (see TABLE 1). The same brands of wood and kitchen matches were used in ES and LSEL tests. Due to availability, two different brands of book matches were used. The different brands of book matches were designated as book A and book B matches.

Between 12 and 58 percent of the matches that were dropped from 18 inches extinguished on contact with the surface. When this happened the trial was noted; however, the time was not included in the averages. For the hand held tests, the burn times recorded were for the duration the tester could hold the matches until the match was too hot to hold.

The average burn times for each different group of matches are listed in TABLE 2 and the individual test results are listed, for both ES and LSEL, in the appendix. A stopwatch was used to measure the time. The stopwatch was started when the match ignited and was stopped when the flame extinguished. Short times generally resulted from the match stick not burning completely. Longer times resulted when the match stick was completely consumed.

TABLE 1: MATCH DESCRIPTION (4 Different Brands)

TYPE	LENGTH (CM)
Wood	4
Kitchen (another type of wood match)	5.5
Book A	3.5
Book B	3.5

TABLE 2: AVERAGE MATCH BURN TIMES (SEC)

ORIENTATION	WOOD		KITCHEN (another type of wood match)		BOOK	
	ES	LSEL	ES	LSEL	ES (BOOK B)	LSEL (BOOK A)
Dropped on glass fiber board	43.9	39.1	31.5	48.8	49.4	35.7
Horizontal	11.4	21.3	30.4	32.4	18.3	27.4
60° from horizontal	25.3	28.6	26.5	22.8	29.6	33.0
Vertical	31.0	25.6	41.0	16.6	35.7	26.2
Dropped on #10 duck cloth	not tested	12.2	not tested	10.4	not tested	12.1
Held next to a vertical panel	not tested	not tested	not tested	15.1	not tested	not tested
Held under a horizontal panel	not tested	not tested	not tested	39.0	not tested	not tested
held under a panel tilted at 45°	not tested	not tested	not tested	20.2	not tested	not tested
Held vertical (desiccated)	not tested	not tested	not tested	57.1	not tested	not tested

One significant result is that the burn times of matches dropped on #10 duck cloth are significantly shorter than the burn times of matches dropped on the fiberglass panel. The duck cloth is similar to the cover fabric on upholstered furniture. Often the match that was dropped onto a fiberglass panel burned its entire length, while the match that was dropped onto duck cloth only burned 1/3 of its length. The duck cloth was not conditioned before the tests.

As a final match test, the kitchen matches were weighed and placed in a desiccator to remove the moisture content of the matches. The matches were weighed daily and placed back in the desiccator until, after one week, their weight stabilized. Water accounted for 5.6% of the weight of the unconditioned matches. The kitchen matches were tested by striking and holding them vertically. On average, the matches burned for 57.1 seconds. The individual results are listed in the appendix. In most cases the match burned its entire length. In contrast, when the unconditioned kitchen matches were burned in a vertical position the flame only traveled a short distance before it was extinguished.

DISPOSABLE LIGHTERS

A single lighter of each model was evaluated based upon how long the user could hold down the fuel lever either until the components of the lighter got too hot to hold or until the lighter's fuel supply was exhausted. For each test the lighter was held vertically. As can be seen from Table 3, the lighters could be hand held for at least three minutes before lighters ran out of fuel or surface temperatures of the lighters forced the tester to disengage.

TABLE 3: DISPOSABLE LIGHTER EXPERIMENTS

LIGHTER BRAND	TIME (s)	END OF TEST CONDITION
Roll and Press	617	Out of Fuel
Mini Roll and Press	200	Too Hot to Hold
Child Resistant Roll and Press	350	Too Hot to Hold
Piezo Electric	960	Out of Fuel

The limited experiments with matches indicate a range of burn times that are consistent with the burn times of 5, 15, 20, 25 and 50 seconds used in the draft Research Test Protocol for Small Open-Flame Ignitability of Full Scale Upholstered Furniture. Other small open-flame ignition sources such as cigarette lighters clearly have burn times considerably longer than matches.

Attachment(s)
Appendix

cc: Andrew Ulsamer, LSEL
Linda Fansler, LSEL
James F. Hoebel, ESME
Dale Ray, ECON

APPENDIX: BURN TIMES FOR MATCHES (tests performed by Engineering Sciences)

*Dropped from 18 inches on to fiber board

WOOD MATCHES
(24 % extinguished when impacted with ground)

Trial #	Burn Time(s)
1	46
2	36
3	9
4	0
5	0
6	53
7	0
8	27
9	54
10	0
11	0
12	60
13	36
14	40
15	64
16	15
17	57
18	55
19	49
20	48
21	53
22	27
23	49
24	56
25	0
AVERAGE:	43.89

(FOR MATCHES THAT DID NOT EXTINGUISH WHEN IMPACTED WITH GROUND)

KITCHEN MATCHES
(32% extinguished when impacted with ground)

Trial #	Burn Time(s)
1	0
2	20
3	0
4	27
5	17
6	41
7	0
8	66
9	21
10	45
11	0
12	0
13	22
14	23
15	59
16	23
17	27
18	35
19	0
20	20
21	0
22	50
23	0
24	20
25	19
	31.47

BOOK MATCHES (designated as book B matches)
(12% extinguished when impacted with ground)

Trial #	Burn Time(s)
1	37
2	42
3	0
4	0
5	68
6	39
7	55
8	51
9	49
10	61
11	55
12	49
13	47
14	57
15	56
16	0
17	55
18	45
19	50
20	53
21	60
22	55
23	24
24	40
25	40
	49.45

*Held at 60 degree from horizontal

WOOD MATCHES

Trial #	Burn Time(s)
1	24
2	29
3	30
4	29
5	25
6	34
7	27
8	25
9	23
10	20
11	28
12	26
13	34
14	9
15	32
16	27
17	29
18	32
19	34
20	27
21	26
22	24
23	27
24	26
25	17
AVERAGE:	26.56

KITCHEN MATCHES

Trial #	Burn Time(s)
1	19
2	18
3	31
4	41
5	14
6	13
7	22
8	27
9	50
10	10
11	7
12	25
13	37
14	33
15	10
16	42
17	47
18	15
19	25
20	36
21	25
22	7
23	27
24	37
25	44
	26.48

BOOK MATCHES (designated as book B matches)

Trial #	Burn Time(s)
1	31
2	27
3	25
4	31
5	32
6	26
7	38
8	39
9	30
10	26
11	35
12	31
13	30
14	28
15	30
16	25
17	29
18	33
19	18
20	27
21	29
22	30
23	35
24	26
25	29
	29.6

APPENDIX: BURN TIMES FOR MATCHES (tests performed by Engineering Sciences)

* Held Horizontal (Parallel to Floor)

WOOD MATCHES Trial #	Burn Time(s)	KITCHEN MATCHES Trial #	Burn Time(s)	BOOK MATCHES (designated as book B matches) Trial #	Burn Time(s)
1	17	1	25	1	17
2	10	2	25	2	15
3	11	3	19	3	18
4	15	4	25	4	22
5	8	5	26	5	13
6	8	6	27	6	15
7	12	7	35	7	18
8	10	8	31	8	18
9	8	9	58	9	20
10	12	10	34	10	19
11	13	11	27	11	22
12	13	12	32	12	18
13	13	13	40	13	15
14	15	14	26	14	17
15	7	15	29	15	15
16	10	16	33	16	20
17	8	17	39	17	16
18	10	18	28	18	22
19	12	19	26	19	17
20	15	20	27	20	19
21	13	21	27	21	22
22	10	22	33	22	15
23	9	23	32	23	17
24	12	24	30	24	22
25	15	25	27	25	25
AVERAGE:	11.44		30.44		18.28

* Held Vertical (Perpindicular to Floor)

WOOD MATCHES Trial #	Burn Time(s)	KITCHEN MATCHES Trial #	Burn Time(s)	BOOK MATCHES (designated as book B matches) Trial #	Burn Time(s)
1	34	1	44	1	40
2	30	2	43	2	39
3	25	3	59	3	37
4	26	4	34	4	45
5	33	5	51	5	27
6	30	6	37	6	25
7	29	7	55	7	20
8	33	8	55	8	42
9	20	9	15	9	35
10	17	10	17	10	36
11	36	11	37	11	47
12	20	12	43	12	34
13	33	13	40	13	32
14	37	14	36	14	30
15	30	15	43	15	26
16	22	16	47	16	39
17	31	17	52	17	45
18	36	18	60	18	41
19	45	19	38	19	39
20	25	20	37	20	42
21	15	21	26	21	36
22	38	22	28	22	36
23	41	23	28	23	34
24	39	24	53	24	37
25	49	25	46	25	29
AVERAGE:	30.96		40.96		35.72

Appendix: Individual Burn Times For Various Test Conditions (tests performed by LSEL)

Wood Matches Dropped from 18" on fiberboard	Wood Matches Dropped from 18" on #10 Duck Cloth	Wood Matches Match held Horizontal (Parallel to floor)	Wood Matches Match held Vertical (Perpendicular to floor)	Wood Matches Match Held at 60 ° above horizontal
•	•	21	12	19
54	11	16	25	31
55	11	18	39	27
40	14	28	35	17
•	•	15	14	28
47	14	18	12	20
56	15	19	41	36
•	•	23	14	29
•	8	28	8	35
48	13	22	35	13
•	•	21	7	27
26	20	29	31	35
46	15	30	10	37
24	11	20	11	34
•	11	21	34	26
•	7	16	10	29
•	•	25	30	31
32	•	19	40	30
39	14	28	39	33
23	10	20	50	33
40	•	20	28	34
•	9	18	52	29
•	•	20	30	34
4	•	15	25	25
46	11	23	10	22
•	15			
•	•			
•	20			
51	16			
58	4			
37	12			
•	12			
•	•			
•	•			
•	10			
33	12			
•	11			
5				
20				
43				
45				
49				
56				
Average 39.1	Average 12.2	Average 21.3	Average 25.6	Average 28.6

Appendix: Individual Burn Times For Various Test Conditions (Cont'd) (tests performed by LSEL)

Kitchen Matches Dropped from 18' on fiberboard	Kitchen Matches Dropped from 18" on #10 Duck Cloth	Kitchen Matches Match held Horizontal (Parallel to floor)	Kitchen Matches Match held Vertical (Perpendicular to floor)	Kitchen Matches Match held at 60° above horizontal	Kitchen Matches Match Held Adjacent To a vertical fiberglass panel	Kitchen Matches Match held Under Horizontal Fiberglass	Match held Under a Fiberglass Panel Tilted at 45°	Kitchen Matches Desicated Matches Match held Vertical
•	•	31	17	49	13	17	26	33
27	•	42	28	49	7	48	10	39
•	•	23	13	38	11	40	6	40
•	14	30	8	10	10	54	11	76
11	•	22	14	49	14	24	15	67
•	5	26	24	16	22	57	47	15
56	•	41	21	20	15	10	10	69
64	•	40	13	14	17	17	20	63
77	16	34	13	10	9	38	9	64
63	5	43	14	11	15	78	17	74
30	8	37	13	34	21	32	33	34
47	9	21	32	22	9	69	49	64
•	18	30	15	17	18	37	17	60
47	11	33	12	9	22	35	12	45
•	5	23	23	27	19	38	9	52
•	6	32	20	6	8	38	7	89
43	11	16	19	14	13	32	13	67
•	21	44	15	19	19	43	19	65
•	8	28	9	25	22	52	19	56
•	13	45	14	37	21	51	7	62
96	12	43	28	43	20	26	20	70
•	8	43	15	17	16	28	44	60
87	10	11	5	22	9	33	24	51
•	6	33	6	5	10	37	29	42
•	10	39	23	8	18	40	32	70
•	7							
42	6							
70	12							
44	10							
94	13							
42	16							
•								
•								
7								
19								
56								
57								
•								
•								
40								
30								
49								
22								
Average 48.8	Average 10.4	Average 32.4	Average 16.6	Average 22.8	Average 15.1	Average 39.0	Average 20.2	Average 57.1

Appendix: Individual Burn Times For Various Test Conditions (Cont'd) (tests performed by LSEL)

Book A Dropped from 18" on fiberboard	Book A Dropped from 18" on #10 Duck Cloth	Book A Match held Horizontal (Parallel to floor)	Book A Match held Vertical (Perpendicular to floor)	Book A Match Held 60 ° above horizontal
12	14	31	26	24
32	10	37	25	45
34	10	33	23	26
25	14	34	29	30
35	13	31	25	33
40	14	32	26	37
36	25	27	26	26
29	14	29	24	40
42	15	29	26	32
26	•	22	24	24
50	13	20	23	27
30	11	26	26	26
34	•	28	25	26
40	•	24	30	44
36	7	23	25	48
27	11	25	26	35
40	•	27	25	42
43	10	29	24	25
•	12	25	29	28
20	10	26	25	47
31	10	23	30	34
44	9	26	35	24
50	•	26	23	30
39	10	26	29	30
52	12	26	25	42
45	8			
	12			
	14			
	13			
	•			
	12			
Average 35.7	Average 12.1	Average 27.4	Average 26.2	Average 33.0