Place the Small Torso Template in the opening in Plane A with its plane parallel to Plane A; rotate the template to its most adverse orientation with respect to the opening while keeping it parallel to Plane A. Does the opening in Plane A admit the Small Torso Template in any orientation when rotated about its own axis?

NO - If the opening in Plane A does not admit the Small Torso Template in any orientation, then the opening is small enough to prevent either head first or feet first entry by the smallest user at risk and is not an entrapment hazard. The opening ~~conforms to~~ meets the ~~requirements~~ recommendations.

YES - If the opening in Plane A admits the Small Torso Template, then the smallest user at risk can enter the opening in Plane A. The entrapment potential depends on whether or not the smallest user at risk can also enter the opening in Plane B. The Small Torso Template is again used to test this opening as follows:

With the plane of the Small Torso Template parallel to the opening in Plane B and with the template's major axis (i.e., the 6.2-inch dimension) parallel to Plane A, does the opening in Plane B admit the Small Torso Template?

NO - If the opening in Plane B does not admit the Small Torso Template, then it is small enough to prevent head or feet first entry by the smallest user at risk. Therefore the depth of penetration into the opening in plane A is insufficient to result in entrapment of the smallest user at risk. The opening ~~conforms to the requirements~~ meets the recommendations.

YES - If the opening in Plane B admits the Small Torso Template, then the smallest user at risk can enter the opening in Plane B feet first. The entrapment potential depends on whether or not the Large Head Template can exit the opening in Plane A when tested as follows: Place the Large Head Template in the opening in Plane A with its plane parallel to Plane A. Does the opening in Plane A admit the Large Head Template?

NO - If the opening in Plane A does not admit the Large Head Template, then a child whose torso can enter the opening in Plane A as well as the opening in Plane B, may become entrapped by the head in the opening in Plane A. The opening ~~fails to conform to the requirements~~ does not meet the recommendations.

YES - If the opening in Plane A admits the Large Head Template, then the largest user at risk can exit the opening in Plane A. The entrapment potential depends on whether or not the largest user at risk can also exit the opening in Plane B. The Large Head Template is used to test this as follows:

With the plane of the Large Head Template parallel to the opening in Plane B, does the opening in Plane B admit the Large Head Template?

NO - If the opening in Plane B does not admit the Large Head Template, then the largest user at risk cannot exit the opening in Plane B. This presents an entrapment hazard because

a child's torso may enter the openings in Plane A and Plane B, and a child's head may pass through the opening in Plane A but become entrapped in the opening in Plane B. The opening ~~fails to conform to the requirements~~ does not meet the recommendations.

YES - If the opening in Plane B admits the Large Head Template, then the largest user at risk can exit the opening in Plane B so there is no entrapment hazard. The openings in Plane A and Plane B ~~conform to the requirements~~ meet the recommendations.

B6. Non-Rigid Openings -- Climbing components such as flexible nets are also a special case for the entrapment tests because the size and shape of openings on this equipment can be altered when force is applied, either intentionally or simply when a child climbs on or falls through the openings. Children are then potentially at risk of entrapment in these distorted openings.

B6.1 Test Fixtures -- The procedure for determining conformance to the entrapment ~~requirements~~ recommendations for non-rigid openings requires two three-dimensional test probes which are illustrated in Figures B-8 and B-9 and are applied to an opening in a non-rigid component with a force of up to 50 pounds. These test probes may be purchased from NRPA [12].

B6.2 ~~Requirements~~ Recommendations -- When tested in accordance with the procedure in B6.3 below, a non-rigid opening may ~~conform to the requirements~~ meet the recommendations in one of two ways:

(1) The opening does not permit complete passage of the Small Torso Probe when tested in accordance with the procedure in B6.2 below.

(2) The opening allows complete passage of the Small Torso Probe and the Large Head Probe when tested in accordance with the procedure in B6.2 below.

A non-rigid opening does not ~~conform to the entrapment requirements~~ meet the entrapment recommendations if it allows complete passage of the Small Torso Probe but does not allow complete passage of the Large Head Probe.

B6.3 Test Procedure -- Place the Small Torso Probe in the opening, tapered end first, with the plane of its base parallel to the plane of the opening. While keeping its base parallel to the plane of the opening, rotate the probe to its most adverse orientation (major axis of probe parallel to major axis of opening). Determine whether the probe can be pushed or pulled through the opening by a force no greater than 50 pounds. If the Small Torso Probe cannot pass completely through the opening, it ~~conforms to the requirements~~ meets the recommendations.

If the Small Torso Probe passes completely through the opening, place the Large Head Probe in the opening with the plane of its base parallel to the plane of the opening. Again attempt to push or pull the probe through the opening with a force no greater than 50 pounds. If the Large Head Probe can pass completely through the opening, it ~~conforms to the requirements~~ meets the recommendations.

APPENDIX C

Summary Characteristics of Organic and Inorganic Loose-Fill Materials, and Unitary Synthetic Materials

ORGANIC LOOSE MATERIAL
wood chips, bark mulch, etc.

Fall Absorbing Characteristics	Cushioning effect depends on air trapped within and between individual particles, and pre-supposes an adequate depth of material. See Table 2 for performance data.
Installation/ Maintenance	Should not be installed over existing hard surfaces (e.g., asphalt, concrete). Requires a method of containment (e.g.,retaining barrier, excavated pit). Requires good drainage underneath material. Requires periodic renewal or replacement and continuous maintenance (e.g., leveling, grading, sifting, raking) to maintain appropriate depth and remove foreign matter.
Advantages	Low initial cost. Ease of installation. Good drainage. Less abrasive than sand. Less attractive to cats and dogs (compared to sand). Attractive appearance. Readily available.
Disadvantages	The following conditions may reduce cushioning potential: Environmental conditions: rainy weather, high humidity, freezing temperatures. With normal use over time, combines with dirt and other foreign materials. Over time, decomposes, is pulverized, and compacts requiring replenishment. Depth may be reduced by displacement due to children's activities or by material being blown by wind. Can be blown or thrown into children's eyes. Subject to microbial growth when wet. Conceals animal excrement and trash (e.g., broken glass, nails, pencils, and other sharp objects that can cause cut and puncture wounds).

ORGANIC LOOSE MATERIAL (Continued)

Disadvantages (Continued)

Spreads easily outside of containment area.
Can be flammable.
Subject to theft by neighborhood residents for use as mulch.

INORGANIC LOOSE MATERIAL
sand and gravel

Fall Absorbing Characteristics

See Table 2 for performance data.

Installation/ Maintenance

Should not be installed over existing hard surfaces (e.g., asphalt, rock).
Method of containment needed (e.g., retaining barrier, excavated pit).
Good drainage required underneath material.
Requires periodic renewal or replacement and continuous maintenance (e.g., leveling, grading, sifting, raking) to maintain appropriate depth and remove foreign matter.
Compacted sand should periodically be turned over, loosened, and cleaned.
Gravel may require periodic break up and removal of hard pan.

Advantages

Low initial cost.
Ease of installation.
Does not pulverize.
Not ideal for microbial growth.
Nonflammable.
Materials are readily available.
Not susceptible to vandalism except by contamination.
Gravel is less attractive to animals than sand.

Disadvantages

The following conditions reduce cushioning potential:

Environmental conditions: rainy weather, high humidity, freezing temperatures.
With normal use, combines with dirt and other foreign materials.
Depth may be reduced due to displacement by children's activities and sand may be blown by wind.
May be blown or thrown into children's eyes.

INORGANIC LOOSE-FILL MATERIALS (continued)

Disadvantages (continued)

May be swallowed.
Conceals animal excrement and trash (e.g., broken glass, nails, pencils, and other sharp objects that can cause cut and puncture wounds).

Sand:

Spreads easily outside of containment area.
Small particles bind together and become less cushioning when wet; when thoroughly wet, sand reacts as a rigid material.
May be tracked out of play area on shoes; abrasive to floor surfaces when tracked indoors; abrasive to plastic materials.
Adheres to clothing.
Susceptible to fouling by animals.

Gravel:

Difficult to walk on.
If displaced onto nearby hard surface pathways, could present a fall hazard.
Hard pan may form under heavily traveled areas.

UNITARY SYNTHETIC MATERIALS
rubber or rubber over foam mats or tiles,
poured in place urethane and rubber compositions

Fall Absorbing Characteristics

Manufacturer should be contacted for information on Critical Height of materials when tested according to ASTM F1292.

Installation/ Maintenance

Some unitary materials can be laid directly on hard surfaces such as asphalt or concrete. Others may require expert under-surface preparation and installation by the manufacturer or a local contractor. Materials generally require no additional means of containment. Once installed, the materials require minimal maintenance.

Advantages

Low maintenance.
Easy to clean.
Consistent shock absorbency.
Material not displaced by children during play activities.
Generally low life cycle costs.
Good footing (depends on surface texture).
Harbor few foreign objects.
Generally no retaining edges needed.
Is accessible to the handicapped.

Disadvantages

Initial cost relatively high.
Undersurfacing may be critical for thinner materials.
Often must be used on almost level uniform surfaces.
May be flammable.
Subject to vandalism (e.g., ignited, defaced, cut).
Full rubber tiles may curl up and cause tripping.
Some designs susceptible to frost damage.

APPENDIX D

DESCRIPTION OF LOOSE-FILL SURFACING MATERIALS IN TABLE 2

1. WOOD MULCH - Random sized wood chips, twigs, and leaves collected from a wood chipper being fed tree limbs, branches, and brush.

2. DOUBLE SHREDDED BARK MULCH - Similar to shredded mulch commonly used by homeowners to mulch shrubs and flower beds.

3. UNIFORM WOOD CHIPS - Relatively uniform sized shredded wood fibers from recognized hardwoods. Sample contained no bark or leaves.

4. FINE SAND - Particles of white sand purchased in bags marked "play sand." The material was passed through wire-cloth screens of different sizes in accordance with ASTM Standard Method C136-84a and yielded the following results:

SCREEN SIZE	PERCENT PASSING THROUGH SCREEN
#16	100
#30	98
#50	62
#100	17
#200	0-1

5. COARSE SAND - Sample was obtained from a supplier to the landscaping and construction trades. ASTM C136-84a test results were:

SCREEN SIZE	PERCENT PASSING THROUGH SCREEN
#4	98
#8	73
#16	4
#30	1
#50	0-1

6. FINE GRAVEL - Sample was obtained from a supplier to the residential landscaping market. Gravel particles were rounded and were generally less than 3/8 inch in diameter. ASTM C136-84a test results were:

SCREEN SIZE	PERCENT PASSING THROUGH SCREEN
3/8 inch	100
#3½	93
#4	65
#8	8
#16	5
#30	4

7. MEDIUM GRAVEL - Particles were rounded as found in river washed or tumbled stone. ASTM C136-84a test results were:

SCREEN SIZE	PERCENT PASSING THROUGH SCREEN
1/2 inch	100
3/8 inch	80
5/16 inch	58
#3½	20
#4	8
#8	7
#16	3

This Handbook is in the public domain. This copy is in camera-ready format. It may be reproduced in whole or in part without permission and in unlimited quantities. Also, the Handbook, in its entirety or in text only format is available for downloading/printing at CPSC's World Wide Web site on the Internet. The CPSC Web address is: **http://www.cpsc.gov**

If reproduced, the Commission would appreciate knowing how it is used. Send this information to the Office of Information and Public Affairs, U.S. Consumer Product Safety Commission, Washington, D.C. 20207.

FIGURES IN DRAFT REVISION OF PLAYGROUND HANDBOOK
May 1997

NOTE: The numbers in parenthesis are the Figure numbers in the 1991 and 1994 Handbook for Public Playground Safety.

Figure 1 Fall Zone for Slides (16)
Figure 2 Fall Zone for Single-Axis Swings (17)
Figure 3 Fall Zone for Multi-Axis Tire Swings (18)
Figure 4 Protrusion Increases in Diameter From Plane of Initial Surface (New)
Figure 5 Protrusion Test Gauges 1)
Figure 6 Protrusion Test (2)
Figure 7 Protrusion Test Gauge for Suspended Swing Assemblies (3)
Figure 8 Upwards Facing Protrusion (New)
Figure 9 Area on Slides Subject to Protrusion Recommendations in Section 9.4 (New)
Figure 10 Recommendations for Angles (4)
Figure 11 Shield for Angle Less than 55° (5)
Figure 12 Examples of More Challenging Modes of Access (6)
Figure 13 Guardrails on Elevated Platforms (7)
Figure 14 Typical Climbing Equipment (12)
Figure 15 Minimum and Maximum Radii of Non-Circular Merry-Go-Round Platform (13)
Figure 16 Typical Fulcrum Seesaw (14)
Figure 17 Typical Free-Standing Straight Slide (8)
Figure 18 Minimum Side Height for Slide with Circular Cross Section (New)
Figure 19 Formula for Minimum Vertical Side Height for Slide with Curved Chute (New)
Figure 20 Examples of Spring Rockers (15)
Figure 21 Minimum Clearances for Single-Axis Swings (9)
Figure 22 Example of Tot Swings (10)
Figure 23 Multi-Axis Tire Swing Clearance (11)

The numbering of the figures in Appendix B is unchanged and no changes have been made to the figures themselves.

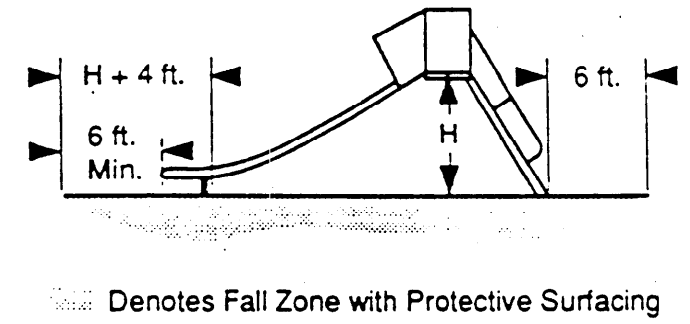

Figure 1 Fall Zone for Slides

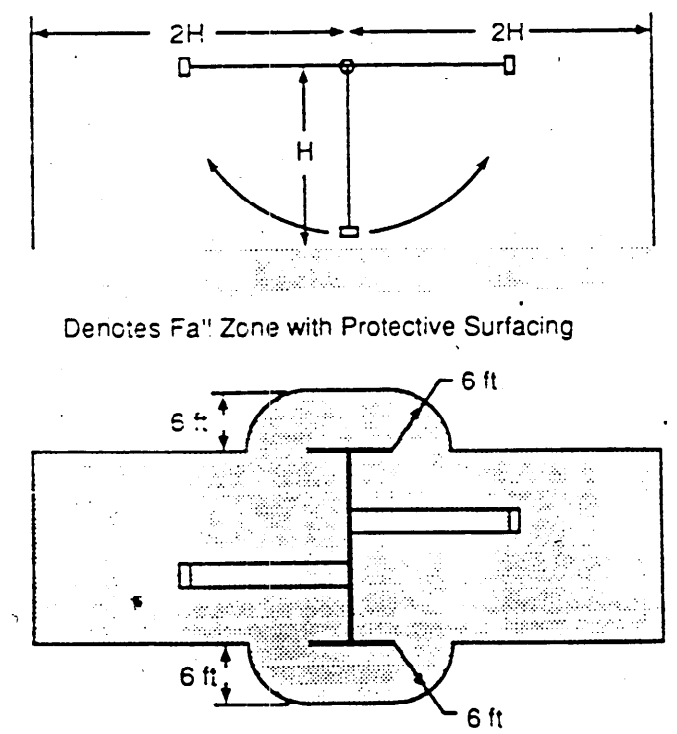

Figure 2 Fall Zone for Single-Axis Swings

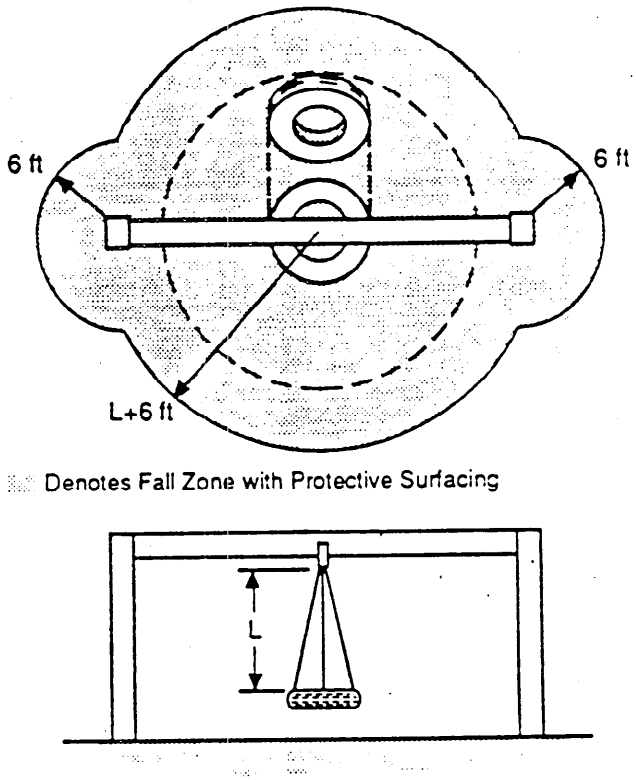

Figure 3 Fall Zone for Multi-Axis Tire Swings

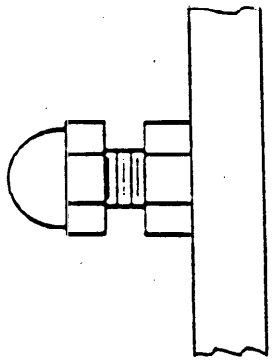

Figure 4 Protrusion Increases in Diameter From Plane of Initial Surface

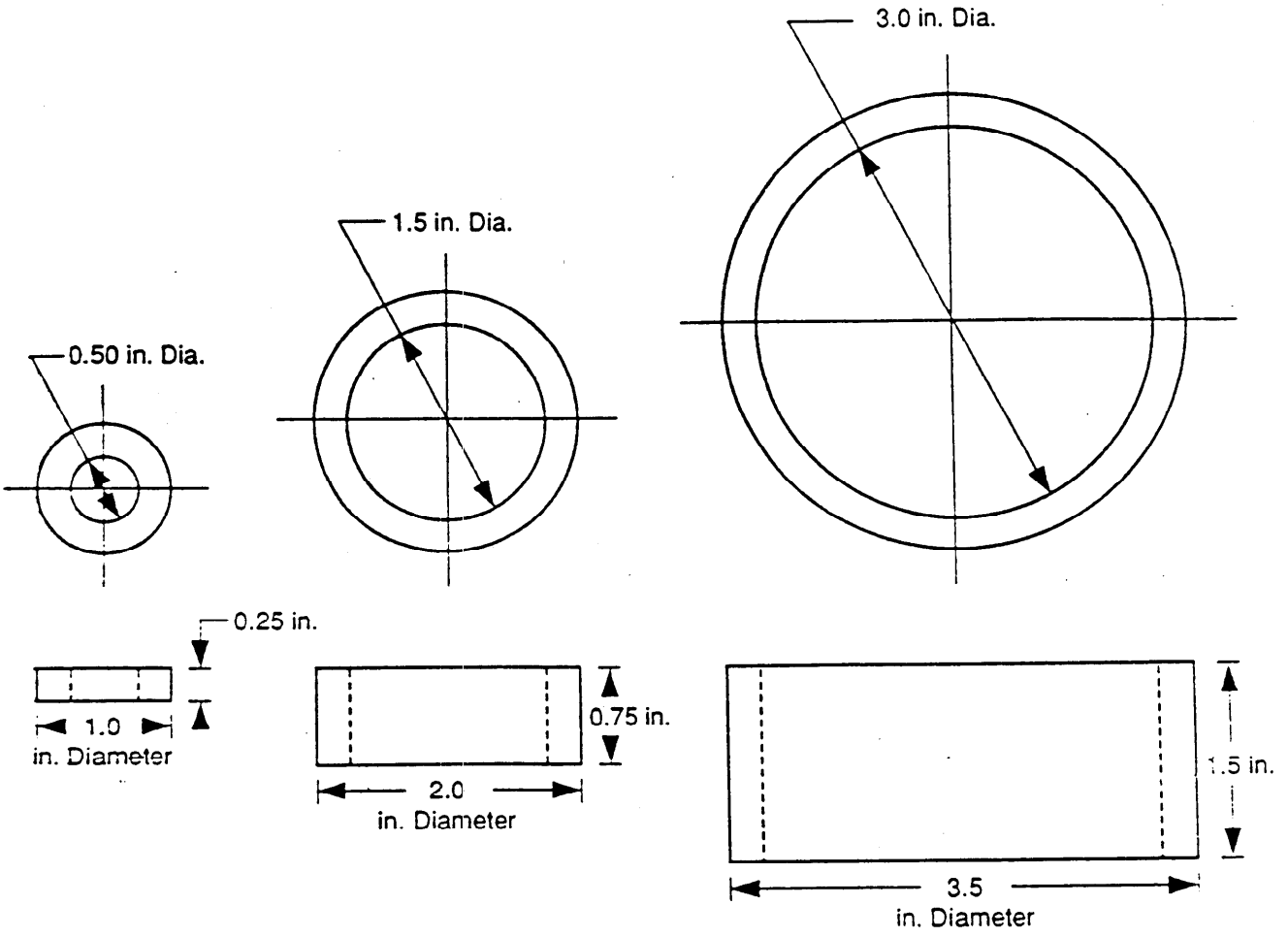

Figure 5 Protrusion Test Gauges

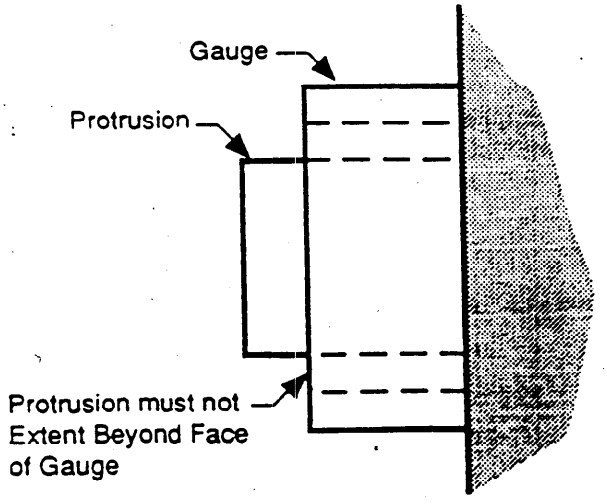

Figure 6 Protrusion Test

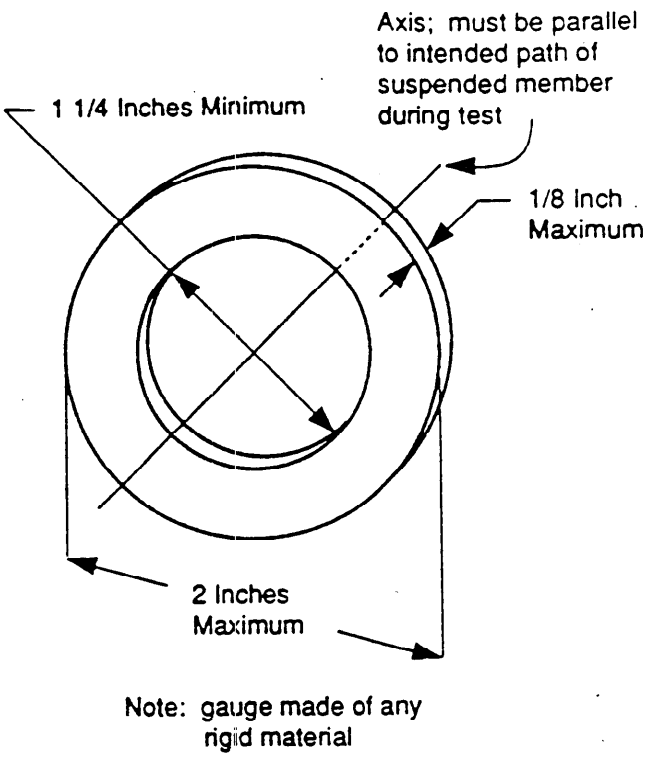

Figure 7 Protrusion Test Gauge for Suspended Swing Assemblies

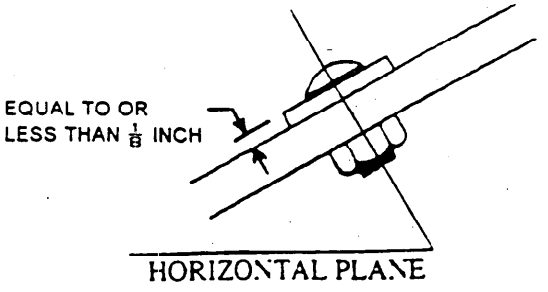

Figure 8 Upwards Facing Protrusion

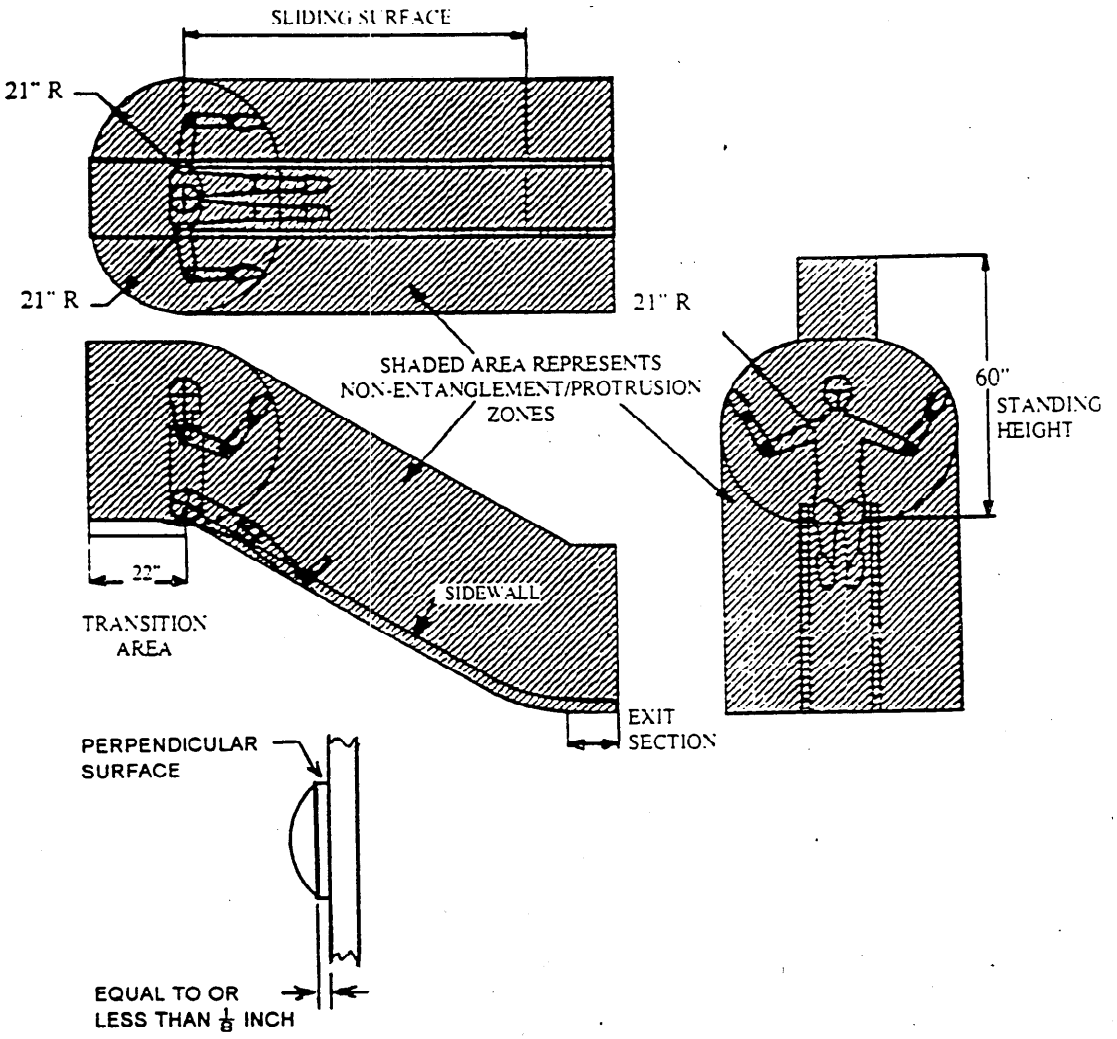

Figure 9 Area on Slides Subject to Protrusion Recommendations in Section 9.4

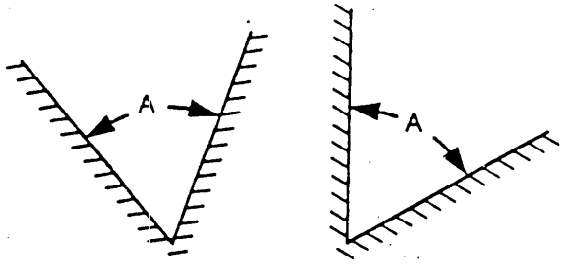

Angle A should exceed 55°

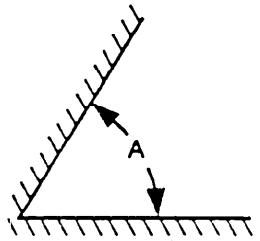

Angle A is not subject to the greater than 55° recommendation if one leg of the vee is horizontal or slopes downward from the apex

Figure 10 Recommendations for Angles

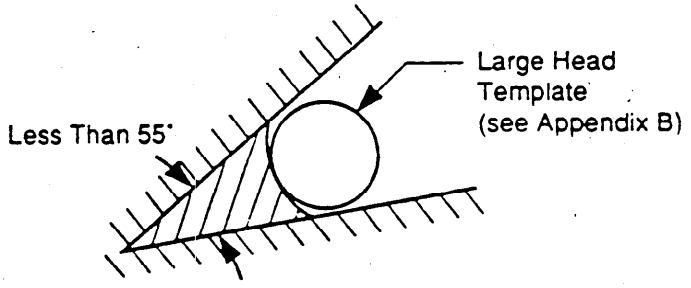

Figure 11 Shield for Angle Less than 55°

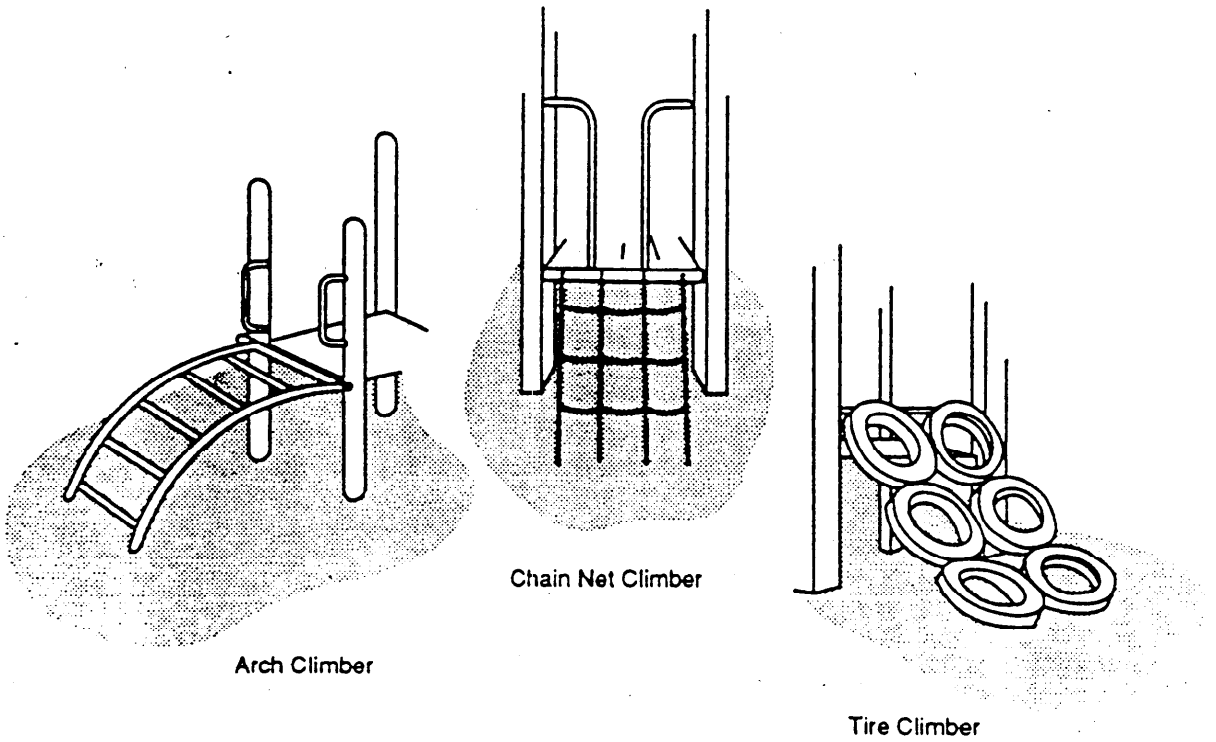

Figure 12 Examples of More Challenging Modes of Access

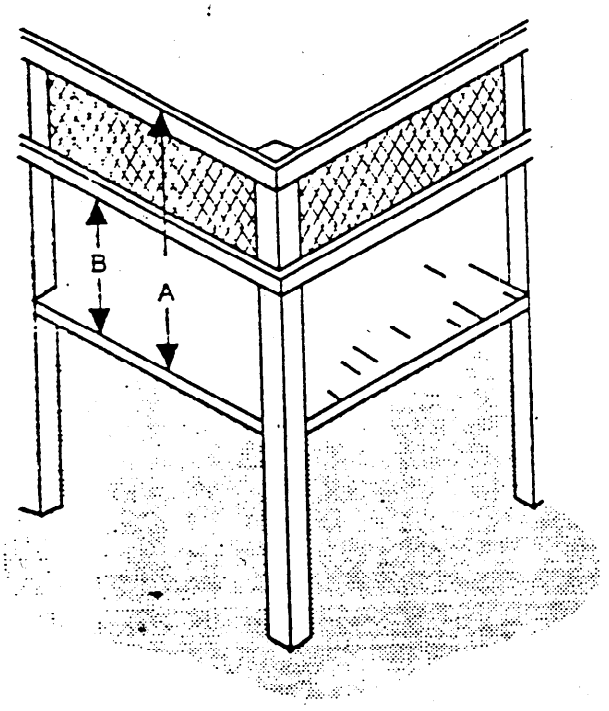

A = 38" minimum for school-age children
29" minimum for preschool-age children

B = 26" maximum for school-age children
23" maximum for preschool-age children

Note: Guardrails should be designed to prevent inadvertent or unintentional falls off the platform, to discourage climbing on the barrier, to ~~preclude~~ prevent the possibility of entrapment, and to ~~facilitate~~ aid supervision. Refer to text for detailed recommendations regarding infill.

Figure 13 Guardrails on Elevated Platforms

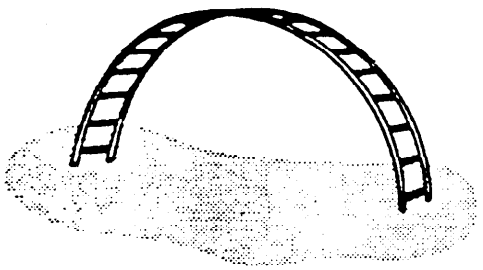

Simple Arch Climber

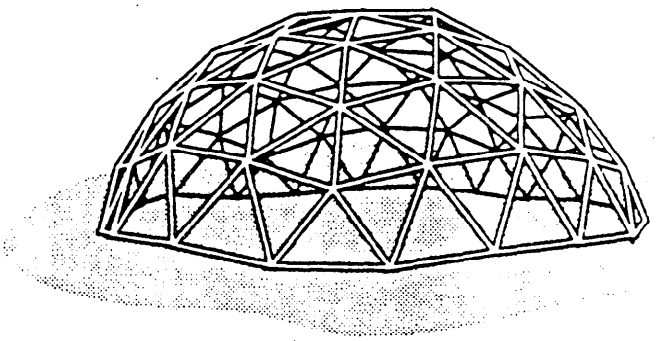

Geodesic Dome Climber

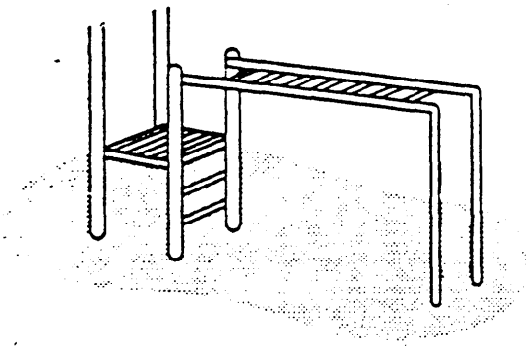

*Overhead Horizontal Ladder

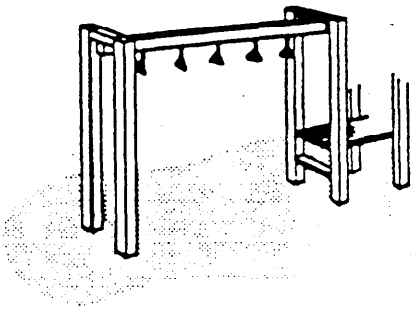

*Overhead Hanging Rings

*Note: This design shows how upper body equipment is typically integrated with multi-use equipment.

Figure 14 Typical Climbing Equipment

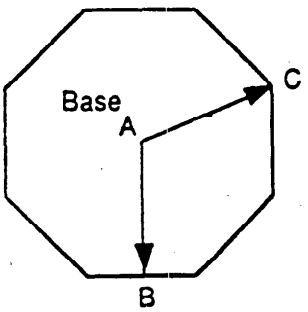

A = Axis of Rotation
AB = Minimum Radius
AC = Maximum Radius

*The difference between dimensions AC and AB should not exceed 2.0 inches.

Figure 15 Minimum and Maximum Radii of Non-Circular Merry-Go-Round Platform

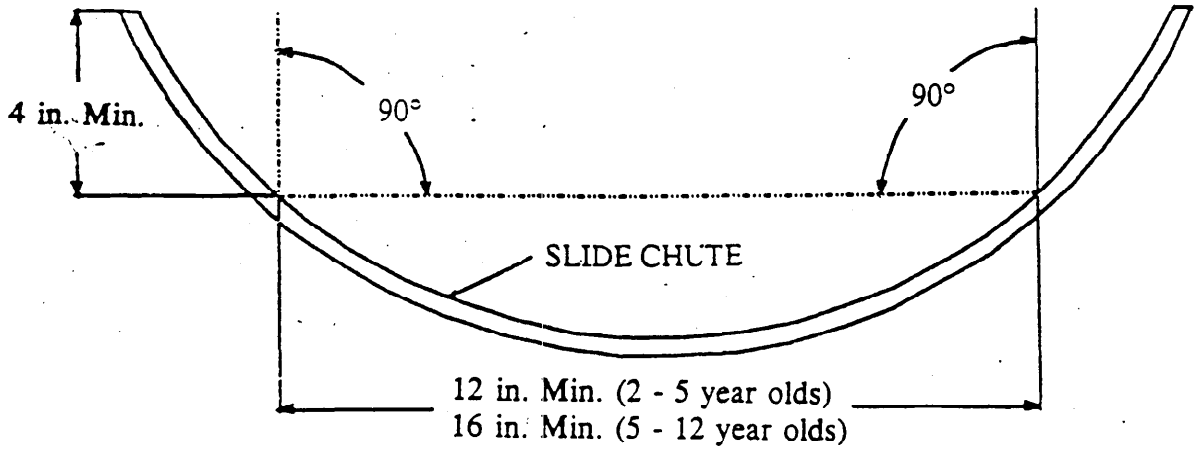

Figure 18 Minimum Side Height for Slide with Circular Cross Section

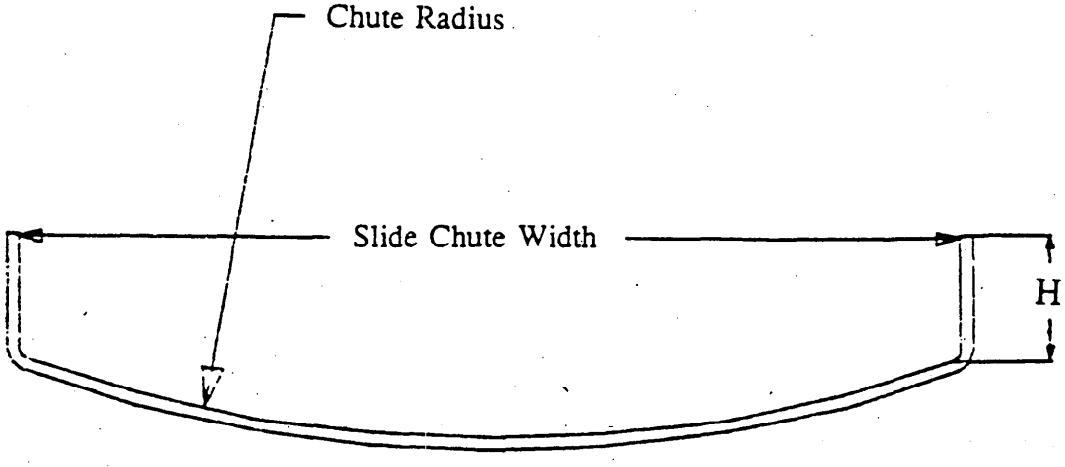

$$H = 4 - \frac{2 \times \text{Slide Chute Width}}{\text{Slide Chute Radius}}$$

Figure 19 Formula for Minimum Vertical Side Height for Slide with Curved Chute

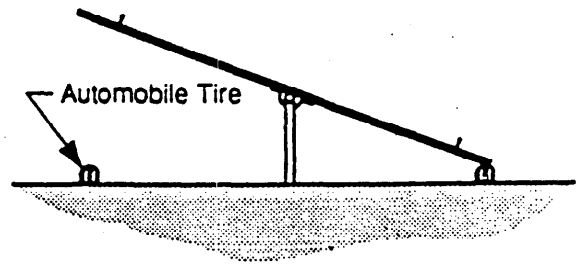

Figure 16 Typical Fulcrum Seesaw

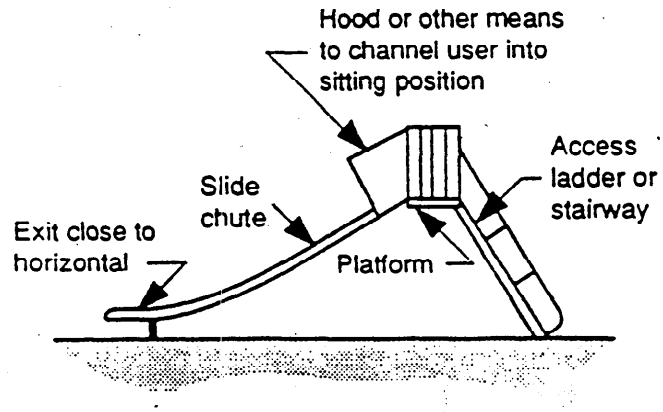

Figure 17 Typical Free-Standing Straight Slide

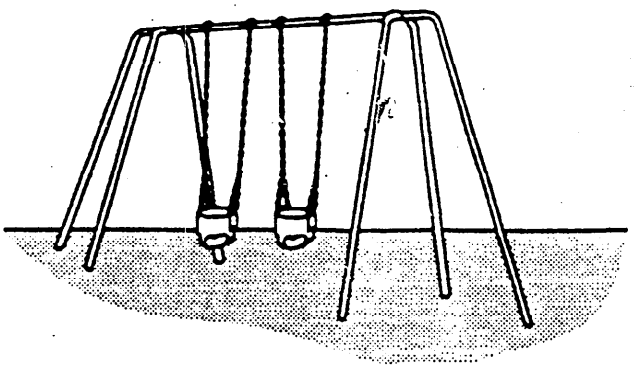

Figure 22 Example of Tot Swings

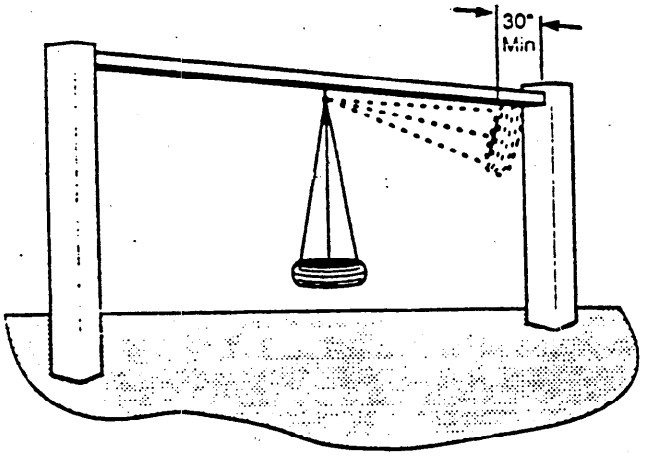

Figure 23 Multi-Axis Tire Swing Clearance

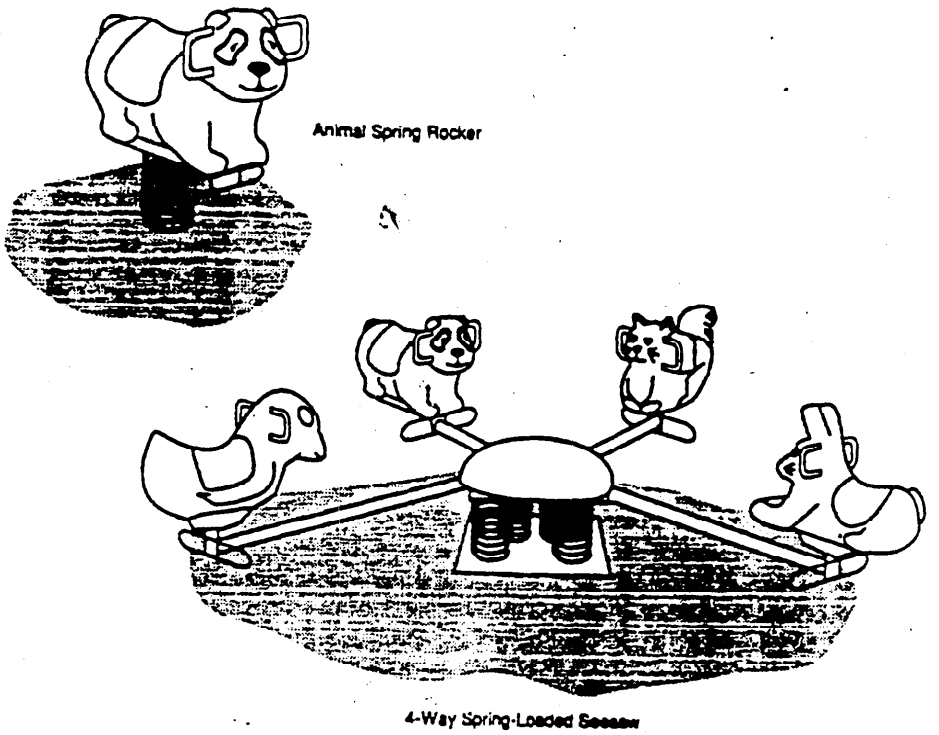

Figure 20 Examples of Spring Rockers

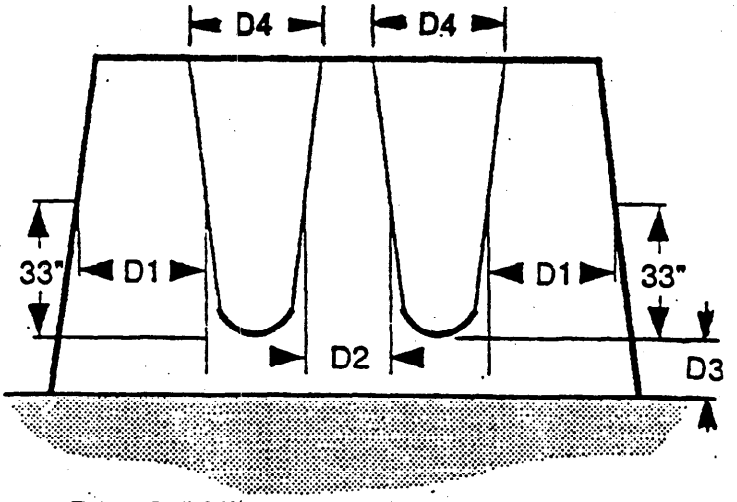

D1 = 30" Minimum
D2 = 24" Minimum
D3 = For Preschool Age Children - 12" Min.
For School-Age Children - 16" Min.
D4 = 20" Minimum

Figure 21 Minimum Clearances for Single-Axis Swings