escalator safety is well intentioned, additional regulators and regulations are not warranted; however, we concur that strict and uniform enforcement of current state and local regulations by the appropriate authorities can improve safety.

On May 14, 1996, at a meeting requested by the CPSC, at the ASME A17 Main Committee meeting where our Executive Director was present, the CPSC challenged the industry to develop a step/skirt performance standard. We understand, at their own expense, NEII accepted the challenge. NEII is going to retain the respected independent engineering research firm of international repute, Arthur D. Little, Inc. to assist the industry in developing a step/skirt performance testing standard. Once concluded, NEII will present the results to the ASME A17 Safety Code for Elevators and Escalators Committee. CPSC should allow the industry trade organization an opportunity to complete its thorough study and the consensus standards writing organization the opportunity to adopt the results of the study, before determining whether any further action is required.

The approach advocated by NEII, the development of voluntary standards using a consensus standard writing committee is in complete accordance with recent Federal legislation. Objectives should be achieved through voluntary standards as opposed to increased government regulations at the Federal level.

CPSC should not begin a rulemaking proceeding to establish an escalator standard because escalators are not consumer products within CPSC's jurisdiction. An escalator is part of the structure of the building in which it is located.

Sincerely,

NAESA International

Russell Ohman, President

RO/rw

d:\wpdocs\bdirtors\consumer.rw

Otis Elevator Company
North American Operations
212 West Newberry Road
Bloomfield, Connecticut 06002
860-286-4580 Fax: 860-286-1657

Jim Bolch
Vice President
Maintenance Operations

Otis
A United Technologies Company

July 17, 1997

The Office of The Secretary
Consumer Product Safety Commission
4330 East-West Highway
Bethesda, Maryland

Re: **Petition CP 97-1**
Requesting Development of Mandatory Standards for Escalators

Dear Chairman Brown:

Otis Elevator Company ("Otis") appreciates the opportunity to provide comments and respond to the Consumer Product Safety Commission's ("CPSC" or "Commission") notice concerning the petition for the development of a mandatory standard for escalators (the "Petition") published in the *Federal Register* on May 22, 1997. Otis, a subsidiary of United Technologies Corporation, is a leader in the manufacture, installation and service of escalators world wide. United Technologies is a diversified aerospace and industrial company with sales of $23 billion, whose products include Pratt & Whitney engines, Sikorsky helicopters, Hamilton Standard propellers, Carrier air conditioners, and UT Automotive components.

Otis believes that escalators, when properly installed and maintained in compliance with existing safety standards, are one of the safest modes of transportation. In addition, escalators are regulated by state and local authorities who enforce compliance with established safety standards and codes. Additional federal regulation of escalators is not authorized, warranted, or necessary, and the CPSC should, therefore, deny the petition.

Otis supports the position of the National Elevator Industry, Inc. ("NEII") as set forth in its comments to the Commission dated July 18, 1997, that escalators are not consumer products under the Consumer Product Safety Act (the "Act") and are not within the jurisdiction of the CPSC. Escalators are not produced or distributed for sale to a consumer, or for personal use, consumption or enjoyment of a consumer, in or around a household or residence, a school, in recreation or otherwise. Escalators are sold to developers of real estate or their contractors to be used to transport riders within the buildings in which they are installed. Consumers do not own or exercise any control over the product at any time. On this basis, the Commission should deny the petition.

Furthermore, escalators are designed, manufactured, installed and maintained in accordance with safety standards established by the American Society of Mechanical Engineers ("ASME") A17 Committee. The ASME A17 Committee is a voluntary consensus-based organization which, through its escalator subcommittee, establishes safety standards for escalators and their components. In addition to industry participation, which is limited to one third of the committee membership, participation by building owners, property managers, independent service companies, fire emergency organizations and independent consultants, make the committee a balanced, well-rounded, body that develops standards from a consensus of multiple viewpoints. All of its meetings are open to the public, and any interest group may participate. The industry thus has an established, well-run organization to promulgate safety standards for escalators.

Otis has supported NEII in its efforts through an independent engineering research firm to develop a new performance standard to measure the potential for entrapment between the step and skirt panel of existing escalators. We have also supported NEII's decision to voluntarily coordinate its activities with the Commission and to maintain open communication channels. NEII has expressed to the Commission its intention to promulgate the new standard through the ASME A17 Committee after it is developed. Both the federal government and, specifically, the Commission have endorsed the policy that standards developed by private, consensus organizations are to be used whenever possible. The federal government recognizes that these groups are better equipped than the government to understand all points of view and to keep up with the state of the art in technical standards. Therefore, we urge the Commission to deny the Petition on the grounds that the industry has an effective mechanism to develop safety standards for escalators. At the very least, the Commission should defer the Petition pending the on-going efforts of the industry.

Otis was founded on safety nearly a century and a half ago, and, throughout its history, has been a leader in innovating new products and features that promote safety. We have demonstrated our commitment to safety by taking a leadership role on the ASME A17 Committee and its subcommittees, and have initiated many of the changes adopted by the ASME A17 Committee over the years. In addition, our commitment means that we will incorporate the products and ideas of others when we deem them an improvement to safety. For example, every escalator sold by Otis since 1983 has been equipped with skirt panel treated with Guardian® coating. Otis did not develop the Guardian® coating, and we have it applied to skirt panels for us by a vendor under license from the patent holder.

Otis will continue to support the development of new performance-based safety standards for escalators and the coordination of such efforts with the CPSC. However, we believe that escalators do not come under the jurisdiction of the CPSC and that any additional regulation by the federal government is likely to divert scarce resources from the development and innovation of new safety features. Therefore, we strongly urge the Commission to deny the petition for the reasons we have stated, or, alternatively, defer the petition pending the ongoing efforts of the industry.

Thank you for the opportunity to provide these comments.

Very truly yours,

James R. Bolch

Montgomery KONE

Heimo Mäkinen
President and CEO
Area Director, North & South America

July 18, 1997

The Honorable Ann W. Brown
The Office Of The Secretary
Consumer Product Safety Commission
4330 East - West Highway
Bethesda, MD 20814-4408

Re: Petition CP97-1 Requesting Development of Mandatory Standards for Escalators

Dear Chairman Brown:

It has been brought to our attention that the Consumer Product Safety Commission has received a Consumer Petition requesting the Consumer Product Safety Commission establish mandatory standards for escalators. We appreceiate the opportunity to provide comments and respond to the CPSC Notice of 62 Fed. Reg. 28,005, May 22, 1997.

Our company is opposed to this Petition and requests that the Consumer Product Safety Commission deny the Petition.

Montgomery KONE Inc. and its predecessor, Montgomery Elevator Company, have been manufacturing, installing and maintaining escalators for over forty years throughout the United States. It has been the conclusion of our company that escalators when properly manufactured, installed and maintained are safe for use by the general public. Each of the over 20,000 employees of KONE Corporation and over 4,500 employees of Montgomery KONE Inc. in the United States are constantly striving to improve this product. Escalators are electrical mechanical machines and like any other machine, accidents can and have happened on this equipment. However, literally billions of people are safely carried on our escalators annually without an accident. We are constantly striving to make our escalators better and continue to decrease the possibility that any kind of accident can occur. Clearly, the safety record, even considering the Consumer Product Safety Commission's own accident estimates, is unparalleled when compared to other products of its type and certainly considering the billions of people that are moved on this equipment every day.

Montgomery KONE Inc. feels that the Petition should be denied for the following reasons:

1. Escalators are not consumer products. Escalators are industrial products sold to general contractors and owners of buildings, shopping centers and airports. When installed, they become a permanent part of the building and are

considered to be an "improvement to real property." While less than one percent of the escalators installed in buildings have been removed from a building, refurbished and reinstalled in a new building, when reinstalled they again become a permanent part of the structure.

2. Escalators are not sold or distributed to the using public but rather to building owners or general contractors.

3. The consuming public does not own escalators and does not supervise or control the way the escalator is operated or maintained. The operation and maintenance is controlled by the building owner.

4. Escalators are not used by the public in or around the home, a school or similar location but rather predominantly at commercial facilities such as airports, shopping centers and commercial buildings.

5. Escalators are not normally, ordinarily or customarily used for personal enjoyment, recreation or otherwise by the public other than as a basic mode of transportation.

6. Since the Consumer Product Safety Commission has no jurisdiction over escalators, the Commission should be required by its own regulations to deny the Petition. 16 CFR 1051.(6)(a). Failure to deny the Petition would be arbitrary and capricious and in excess of the statutory jurisdiction in violation of the Administrative Procedures Act, 5 USC 706 (2)(A) & (C).

7. Alternatively, even if the Consumer Product Safety Commission were to assert jurisdiction over escalators it should defer or deny the Petition, pending completion of the Arthur D. Little Inc. study concerning step skirt clearance and related efforts to modify voluntary standards on escalators.

8. Federal Policies require deferral to a voluntary standards process if possible. See office of Management & Budget Circular 119, (October 1993) and Section 12 of the National Technology Transfer & Advancement Act.

9. Chairman Brown, your stated policy is to work with industry and, when possible, to use the voluntary standards process to enhance product safety. That is precisely what the escalator industry has already proposed and has invited participation from the Consumer Product Safety Commission in the development and administration of the ASME Code.

10. The Consumer Product Safety Commission's denial or deferral of the Petition will encourage the CPSC and industry to continue to cooperate on voluntary

standards development for escalators likely resulting in more expeditious modifications to existing standards where warranted.

11. There already exists an American National Standard Safety Code (ASME A17.1) controlled and published by the American Society of Mechanical Engineers which has been in place for over seventy-five years. This safety code involves the manufacturing and using public and is a consensus standard. This standard continually evaluates suggestions from all quarters of the escalator community and on an ongoing basis strives to improve this product. Further, any "NO" vote must be resolved to the satisfaction of the person or entity suggesting the improvement and therefore, the interests of everyone involved are served.

12. The ASME Code is continually modified, improved and updated. The Consumer Product Safety Commission has been invited to participate, attend and provide whatever suggestions, recommendations or improvement it feels necessary. Therefore, the Commission has no need to further regulate.

13. The ASME Code is enforced by state and local inspectors across the United States. Therefore, regulation and enforcement of the industry is currently occurring on a regular basis.

14. Any separate effort by the CPSC to regulate would be a duplication of the existing effective process now in place since the CPSC has a voice through the ASME Code.

15. Everyone, the public, the industry, the general contractors, architects, owners who purchase escalators, as well as the managing community are familiar with the ASME standard and can and do continually work to improve it.

For the above reasons, our company and our industry is united in its objection to the Consumer Product Safety Commissions claims of jurisdiction and is united in its position that a further regulation of the industry is unnecessary.

We, therefore, request that the Consumer Product Safety Commission deny this Petition.

Sincerely,

Heimo Mäkinen

HM/se
Faxed 7/18/97, Orig FedX 7/18/97

Montgomery KONE

Heimo Mäkinen
President & CEO
Area Director, North & South America

Date: 18 July 1997

To: The Honorable Ann W. Brown
The Office of The Secretary
Consumer Product Safety Commission
FAX: 301 - 504 - 0127

From: Heimo Mäkinen
Montgomery KONE Inc.
FAX: 309 - 757 - 5623

Subject: Petition CP97-1 Requesting Development of Mandatory Standards for Escalators

You should receive 4 page(s), **including this cover sheet.**

Remarks:

☐ Urgent ☒ For Your Review ☐ Reply AS SOON AS POSSIBLE ☐ Please Comment

If any problems receiving this transmission, please contact Diana Cannon at 309 - 757 - 1452.

KONE Americas
One Montgomery Court
Moline, Illinois 61265
U S A.

Telephone 309 / 757-1410
Telefax 309 / 757-5623

Elevators Escalators
Power Walks Power Ramps
Modernization Service

American Public Transit Association
1201 New York Avenue, N.W.
Washington, DC 20005-6141
Phone (202) 898-4000
FAX (202) 898-4070

APTA

July 18, 1997

Chairperson
Leslie R. White

Vice Chairperson
Howard C. Breen

Secretary-Treasurer
Ronald J. Tober

Immediate Past Chairman
Frank J. Wilson

Vice Presidents
J. Barry Barker
Marketing
John P. Bartosiewicz
Bus Operations
Christopher P. Boylan
Government Affairs
Andrew F. Caverly
Governing Boards
Bernard J. Ford, Sr.
Associate Member-At-Large
Delon Hampton
Research and Development
Celia G. Kupersmith
Human Resources
John K. Leary, Jr.
Rail Transit
Brian Macleod
Associate Members
Martin B. Sennett
Small Operations
Ian G. Stacey
Canadian Members
Richard A. White
Management and Finance

President
William W. Millar

Office of the Secretary
Consumer Product Safety Commission
Washington, DC 20207

RE: Petition CP 97-1 Requesting Development of A Safety Standard for Escalators

Dear Secretary Dunn:

The American Public Transit Association (APTA) appreciates this opportunity to comment on the Consumer Product Safety Commission's (CPSC) Petition CP 97-1 Requesting Development of A Safety Standard for Escalators. APTA is a private, nonprofit trade association representing the North American transit industry. Established in 1882, APTA has more than 1000 members, including local mass transit systems, manufacturers and suppliers, and consultants to the transit industry. More specifically, APTA includes among its members approximately 400 American public and private mass transit systems, which carry over 95 percent of those using public transit in the United States.

APTA does not consider regulation of escalators by the CPSC necessary. APTA believes that the promulgation of a safety standard for escalators by CPSC, rather than enhancing safety, would, given the wide usage of existing consensus standards, introduce confusion. The subject of escalator design standards, with particular emphasis on their safety, has long been a high-priority subject with APTA. The mass transit application of escalators is a particularly demanding one, characterized by more severe environmental exposure to weather, by higher passenger loading and by a generally more severe duty cycle. APTA's Elevators and Escalators Technical Committee has created, and our members are selectively using on a trial basis, a set of Guidelines which build upon the commonly used American National Standards Institute (ANSI)/American Society of Mechanical Engineers (ASME) standard A17.1, *Standard Safety Code for Elevators, Escalators, Dumbwaiters and Moving Sidewalks*, but go further. These Guidelines also call upon European experience and incorporate by reference European Standard EN115 *Safety Rules for the Construction and Installation of Escalators and Passenger Conveyors*, issued by the European Committee for Standardization, Brussels. In addition, they incorporate relevant portions of National Fire Protection Association (NFPA) Standard 130, *Fixed Guideway Transit Systems*.

In light of the significant private activity on this issue, APTA urges the CPSC to deny the petition. If, however, CPSC determines that additional action is called for, APTA suggests that CPSC work informally with the National Institute for Standards and Technology (the successor organization to ANSI) and ASME for an update to A17.1, and to recommend to appropriate industry bodies such as ourselves that we develop such guidelines with our membership as may be appropriate to reflect both A17.1 requirements and any additional requirements which reflect our special needs and circumstances. In this manner, commonly used standards in this area would reflect the state of the art and public needs, while avoiding unnecessary and burdensome Federal regulation.

This approach has the additional merit of being in conformance with the will of Congress as expressed in the National Technology Transfer Act of 1995, P.L. 104-113. Section 12(d) of that Act requires Federal agencies, unless it would be inconsistent with applicable law or otherwise impractical, to use privately developed and adopted technical standards in carrying out their missions. The Administration is currently seeking to implement this requirement administratively through a proposed revision of Office of Management and Budget Circular A-119, *Federal Participation in the Development and Use of Voluntary Standards and in Conformity Assessment Activities.*

APTA appreciates the opportunity to comment on this matter. If we can be of further assistance, please do not hesitate to contact APTA's Mattie C. Condray at 202/898-4108 or mcondray@apta.com or APTA's David R. Phelps at 202/898-4085 or dphelps@apta.com.

Sincerely yours,

William W. Millar

William W. Millar
President

WWM:pw

HUBERT H. HAYES, INC.

ELEVATOR CONSULTANTS

1713/19 RALPH AVENUE, 2ND FLOOR
BROOKLYN, N.Y. 11236
TEL: (718) 531-8484
FAX: (718) 531-5059

Sunday, July 20, 1997

Nick Marchiks
U.S.Consumer Products Safety Comm.
4330 East West Highway
Bethesda, MD 20816

Re:OS No 3523 CP 97-1

Dear :Nick

1- Also all escalator should have the type of comb plate shut off as New York City has : "**Rule 805.1s Comb Plate Stop Switch. 1**
On every new and existing escalator, a comb plate stop switch shall be provided at the upper and lower comb plates. Any obstruction exerting a pressure of 30lbs. between the step thread and comb plate shall activate the comb plate stop switch."
Now the is working in the city.

2- We also have extras Skirt Obstruction Devices see:
" **Rule 805.1h Skirt Obstruction Device.**
Means shall be provided to stop the escalator if an object becomes accidentally caught between the step and the skirt as the step approaches the upper comb plate, lower comb plate or center skirt devices. The devices shall be located so that the escalator will stop before that object reaches the comb plate with any load up to full designed load. Center skirt devices shall be located at the center of escalator on both sides having a run of twenty feet or more".

3- It is very important that all Escalator have the best INSPECTION ever six months this and be maintained by trained and qualified person to work on this type equipment and the Escalator must be open when this inspection and maintenance is being done.

4- The sidewall (Skirts Panels) must be check at lest one a month to see if the gap has not changed (keep it close) to the steps.

5- All Hand Rails also need to be check to see if the proper tension is on them and traveling at the same speed as the steps.

Sincerely,

Hubert H Hayes
President

Consumer Product Safety Commission has asked for our input to the following:

A. A design that would close the gap between the moving stair and the sidewall;

In favor of ✓ Against _____

Remarks: No Space is Best and Better inspection,

B. Notify the public how dangerous escalators can be and what type of accidents can occur while riding one;

In favor of ✓ Against _____

Remarks: Audio Message while Riding Up & Down. OR Put with Up.

C. Creating better warning signs that will educate and inform riders;

In favor of ✓ Against _____

Remarks: Warning in the Signs; Not (Caution)

After you review, please send back to NAVTP's Main Office by fax or mail before July 5, 1997.

Please only return the ballot with your comments.

Signature Hayes

2062

HUBERT H. HAYES, INC.
ELEVATOR CONSULTANTS
1713/19 RALPH AVENUE, 2ND FLOOR
BROOKLYN, N.Y. 11236
TEL: (718) 531-8484
FAX: (718) 531-5059

FAX COVER PAGE

DATE: 7/20/97

NAME: Mick Macchiks.

COMPANY: C.P.SC

TOTAL NUMBER OF PAGES: 3

TIME TRANSMITTED:

SENT BY:

NOTICE: If you do not receive all of the pages listed, please contact the undersigned at 718-531-8484.

Name: Hayes

More coming July 21, 97 By Joe

****
ONFIDENTIALITY NOTE: THE INFORMATION CONTAINED IN THIS FACSIM-
LE MESSAGE IS LEGALLY PRIVILEGED AND CONFIDENTIAL INFORMATION
NTENDED ONLY FOR THE USE OF THE INDIVIDUAL OR ENTITY NAMED
ELOW. IF YOU HAVE RECEIVED THIS TELECOPY IN ERROR, PLEASE
MMEDIATELY NOTIFY US BY TELEPHONE AND RETURN THE ORIGINAL MES-
AGE TO US AT THE ABOVE ADDRESS VIA UNITED STATES POSTAL SERV-
ICE. THANK YOU.
NEW YORK CITY CERTIFIED PRIVATE ELEVATOR INSPECTOR
****

National Association of Vertical Transportation Professionals

1713-19 Ralph Avenue
Brooklyn, NY 11236

Phone (718) 209-1581
FAX (718) 209-9530

MULTIFAX COVER SHEET

DATE 7/20/97

NAME Hick M Archiks

COMPANY CPSC

Total Number of Pages 16

Time Transmitted _____

Sent by:

Name HAYES

Phone 718 531 8484

Re QC No # 35 23

CP 97-1

PAR II

Consumer Product Safety Commission has asked for our input to the following:

A. A design that would close the gap between the moving stair and the sidewall;

In favor of ___YES___ Against _____

Remarks: As early as May of 1974, The Haughton Elevator Co. had a step-to-skirt running clearance of 1/16" per the attached two pages from their manuals. From the Montgomery KONE Elevator Co. E-Series 5000® brochure, the attached two pages show that they too can run at a clearance of 1/16" on each side of the steps. Existing escalators can be retrofitted to also operate at 1/16" clearance as illustrated and specified in the Carl J. White & Associates, Inc. "Step Safety Sideplates/Canopy Guard and Lateral Step Guidance Device" sheets attached. The C.P.S.C. should mandate a maximum gap of 1/16" for both new and existing escalators.

B. Notify the public how dangerous escalators can be and what type of accidents can occur while riding one;

In favor of ___YES___ Against _____

Remarks: Notices of education of the public are admirable, but designing and retrofitting escalators to be safer should be the primary objective. Safety yellow colored combplates and bright combplate lighting at the intersection of the steps and comb teeth should be mandatory among other features.

C. Creating better warning signs that will educate and inform riders;

In favor of ___YES___ Against _____

Remarks: The present ASME A17.1 signage titled "Caution" does not comply with and is in violation of the definitions of the "ANSI Standard Z535.4 Product Safety Signs and Labels (June 1991)" attached. The correct title should be "Warning." Pictorials such as the attached proposed sign illustrating side-of-step and falling accidents should be required at the top and bottom landings, on **BOTH SIDES** of all new and existing escalators.

After you review, please send back to NAVTP's Main Office by fax or mail before July 5, 1997.

Please only return the ballot with your comments.

Signature _____

1 of 15

STEP CLEARANCE

The clearance of the step cleats through the comb teeth is extremely critical. This relationship plays an important role in reducing accidents. The skirts on the Haughton unit are normally set for 1/16" running clearance with the step. Code allows 3/8" each side.

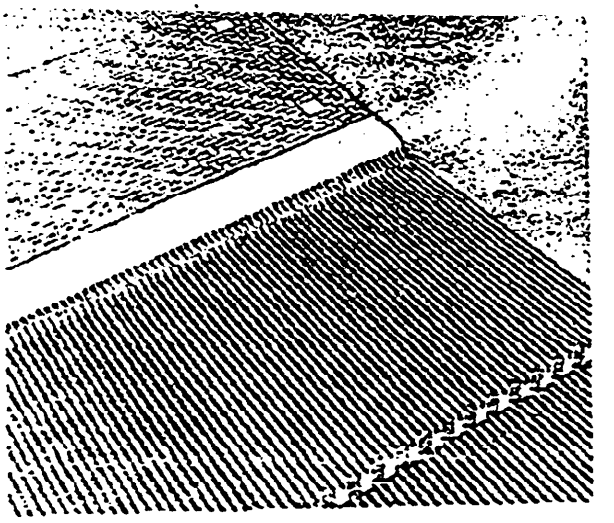

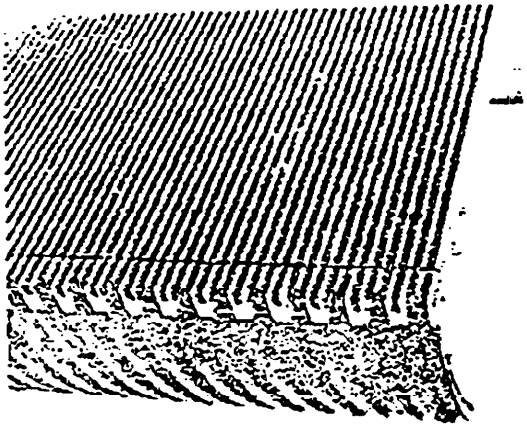

The riser meshes with the step cleat extensions. Clearance between tread and riser is designed for 1/8". The mesh between riser cleats and step cleats is a safety feature reducing the shear hazard as the steps articulate from a step formation to a treadway at both the upper and lower landing.

Photos indicate clearance of steps under combplate and in the upper head drive machine space.

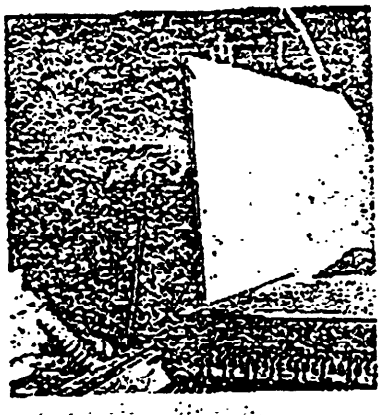

HE-9001 (3-1-8)
5/74

2 of 15

HAUGHTON ESCALATOR MAINTENANCE

TYPE "HC"

1b. CLEANING

Cleaning of the exterior, i.e., trim decks, panels, and landings, is not considered a part of the Escalator maintenance; this generally comes under the scope of the regular interior building cleaners or janitor service.

It should be called to the attention of responsible parties, however, that steps and floor plates must not be subjected to free water mopping or scrubbing. Electrical fittings are not waterproof (unless specially specified) and moisture in them may give rise to trouble. Also, strong cleaning agents may affect the finish of the Escalator equipment.

The step running clearances are as small as practical engineering will permit, but bits of paper, cloth ravelings, match sticks, etc., will filter through. If this refuse is allowed to accumulate indefinitely, a fire hazard will exist. Should an electrical flash, even static, occur, or a careless smoker drop a lighted cigarette or match, a fire could be started. Clinging lint and oil-soaked debris can burn with explosive rapidity and create intense heat.

Most of the ordinary cleaners, such as naptha, create a considerable fire hazard. Carbon tetrachloride is a good cleaner, but it is highly toxic and can be dangerous to those using it in confined places.

After some investigation, a few cleaning solvents have been located that are not classed as seriously toxic or inflammable, and they work very well when directions are followed.

One is known as "Penolene #643" and can be purchased from the Penetone Company at 74 Hudson Street, Tenafly, New Jersey. It is not recommended for continuous use on finished aluminum.

Another cleaning solvent is "Methol Chloroform." It is a product of the Amsco Solvents and Chemical Company at 4619 Reading Road, Cincinnati, Ohio 45229.

These cleaning solvents are not expensive. One half gallon will clean an average unit. Note: Cleaning solutions dry the skin quickly, and all users should be cautioned to wear rubber gloves.

DAILY TELEGRAPH TUESDAY, JANUARY 28, 1988

King's Cross fire set off by match, inquiry is told

By Lin Jenkins

THE KING'S CROSS Underground fire, which claimed 31 lives, would probably have been put out in its early stages had the water sprinkler system been in operation, or had someone used the fire extinguisher, the preliminary hearing of the public inquiry into the tragedy heard yesterday.

Experts showed a "remarkable degree of consensus" in believing that the fire was started by a lighted match falling down the skirting board of the escalator on to a quantity of grease and fluff.

Fuelled by the peeling paint of the ceiling, heated to a high temperature by burning wood in the escalator, the fire caused a "flash-over" into the ticket hall, where most of the victims perished.

Mr Roger Henderson, QC, for the Treasury solicitor, outlining the areas of agreement between forensic experts and scientists, levelled particular criticism at London Regional Transport.

In referring to the "water fog system" at the station, which was not used at the time, he said: "The consensus believes it would or might have been adequate to extinguish the fire." It would probably have prevented the deadly flash-over.

The possibility of an electrical fault could never be completely excluded "because of the poor quality of maintenance of electrical machinery in that area."

He said that the fire in number four escalator linking the Piccadilly Line with the ticket hall on Nov 18 last year could perhaps never be fully explained because of its magnitude.

However, although deliberate dropping of lighted material could not be ruled out, no accelerants had been found, and there was no evidence of deliberate fire raising. Nor had the cleaning fluid used or stored nearby played any part in fuelling the blaze.

"It is probable that it ignited just below halfway up the escalator in an accumulation of grease, fluff and debris, resulting most probably from a lighted match dropping between the skirting board on the right-hand wheel trap of the treads."

Substantial quantities of debris, including grease 30mm deep and 170mm wide, had been found six inches below the skirting board. Discarded matches and cigarette ends had been found elsewhere in the escalator.

Controlled tests on a lower section of the same escalator carried out on Jan 8 had shown that a lighted match would ignite the material, where three burning cigarette ends failed to do so. Charring from similar incidents had been found elsewhere on the escalator and on the one adjoining.

But, such a theory was "plainly not the view of all the experts," Mr Henderson told Mr Desmond Fennell QC, head of the inquiry, at Church House, Westminster.

There was the possibility that it could have been caused by a cigarette, that the match could have been ignited by a moving part of the escalator or that such friction could itself have caused a spark.

Once the fire began, he said, the water fog system could have helped, but the degree would depend on where a sprinkler outlet was positioned and how quickly it was turned on.

The fire spread from the wheel track to the skirting board and on to the balustrade and treads and rises, before igniting the wall panelling and ceiling. It also spread through the decking to escalator number 3.

Experts disagreed on what caused the flash-over into the ticket hall. Some thought the paint on the ceiling was "in itself or when it became de-laminated" a major contributing factor.

Others investigating the cause of the horrifying spread of flames concluded it had been fuelled by the "piston effect" of the trains in the tunnels, whether they stopped or not. Another expert believed simply that the fire followed traditional patterns of those experienced in mines.

"There is a theory by the Health and Safety Executive of a clockwise vortex of flames and heat, which had the effect that, although the ceiling was badly damaged, it did not burn the recessed light fittings."

Mr Henderson said there was also dispute about an assertion from the London Fire Brigade that there was "an accumulation of inflammable substances in the ticket hall."

Because of the varying theories, further tests would have to be conducted.

The flash-over, however, was probably caused "by paint on the ceiling of the shaft being heated to a high temperature, especially by wood in the escalator shaft and by wall panels, such that it ignited and de-laminated," and either by movement of trains or normal combustion there was a sudden outburst from the shaft to the ticket hall.

This view was supported by much evidence, including on report which suggested ther were anomalies in the applic tion of the paint, P2 Prodorite.

Other issues which had sti not been resolved would be th subject of further investigation These included whether th false ceiling had any bearing o the scale of injuries and fatal ties; what paint had been use on the hoardings present in th ticket hall, and whether th flooring in the ticket hall ha acted as fuel for the fire.

Mr Fennell adjourned th hearing until next Monday : Central Hall, Westminster where they would begin hearin evidence from survivors. Som statements would be read, a the victims were still too ill t attend the inquiry.

Investigators are still tryin to identify one of those killed i the fire, a white man age around 50, 5ft 2in tall, an showing signs of having had

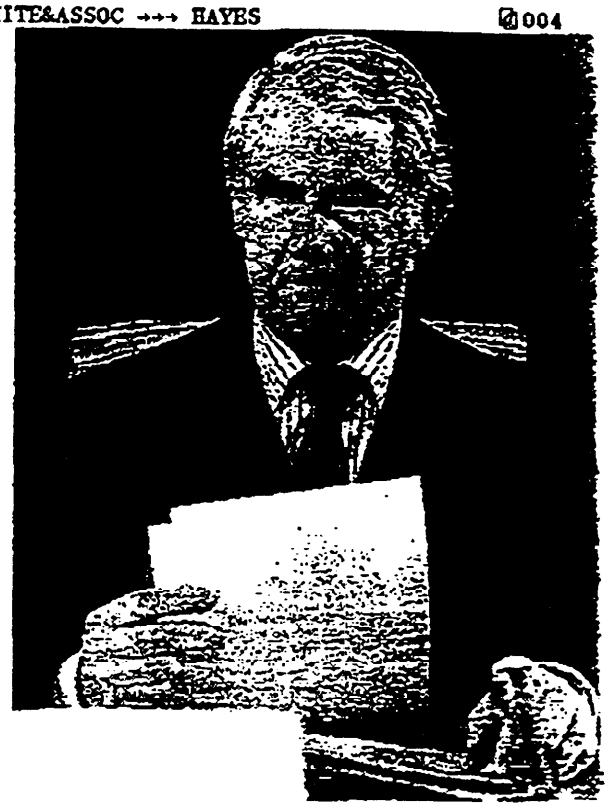

Mr Desmond Fennell QC, head of the inquiry

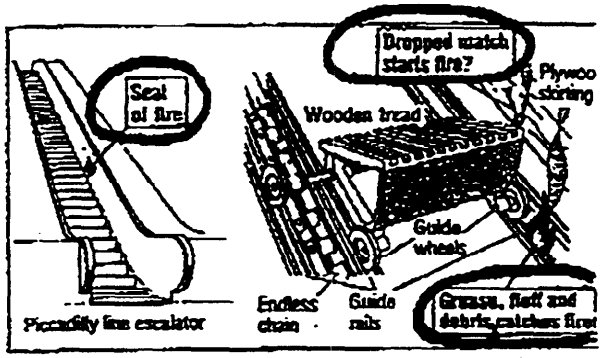

A match probably started the fire, the inquiry was told

46/15

Escalator safety is important to everyone. That's why we designed the E-Series 5000 with significantly improved safety features.

A unique blend of elegance and safety, the E-Series 5000 was designed with concern for not only how it will add to the aesthetics of your building, but also for the safety of your customers as well. The E-Series 5000 escalator was designed from our "customers' perspectives" with the intention of making it an elegant addition to any building while also exceeding ASME code requirements. The result is a rare combination of design and performance that is sure to please the most discriminating Design Professional and Building Owner. The following pages detail innovative features of this new product and prove that elegance and safety can co-exist within the same beautiful and clean lines of the E-Series 5000.

New patented step guidance system reduces the clearance between the steps and the skirt panels to a nominal 1/16". This far exceeds the minimum ASME code requirement of 3/16" on each side of the step. Steps are laterally controlled to prevent side to side movement.

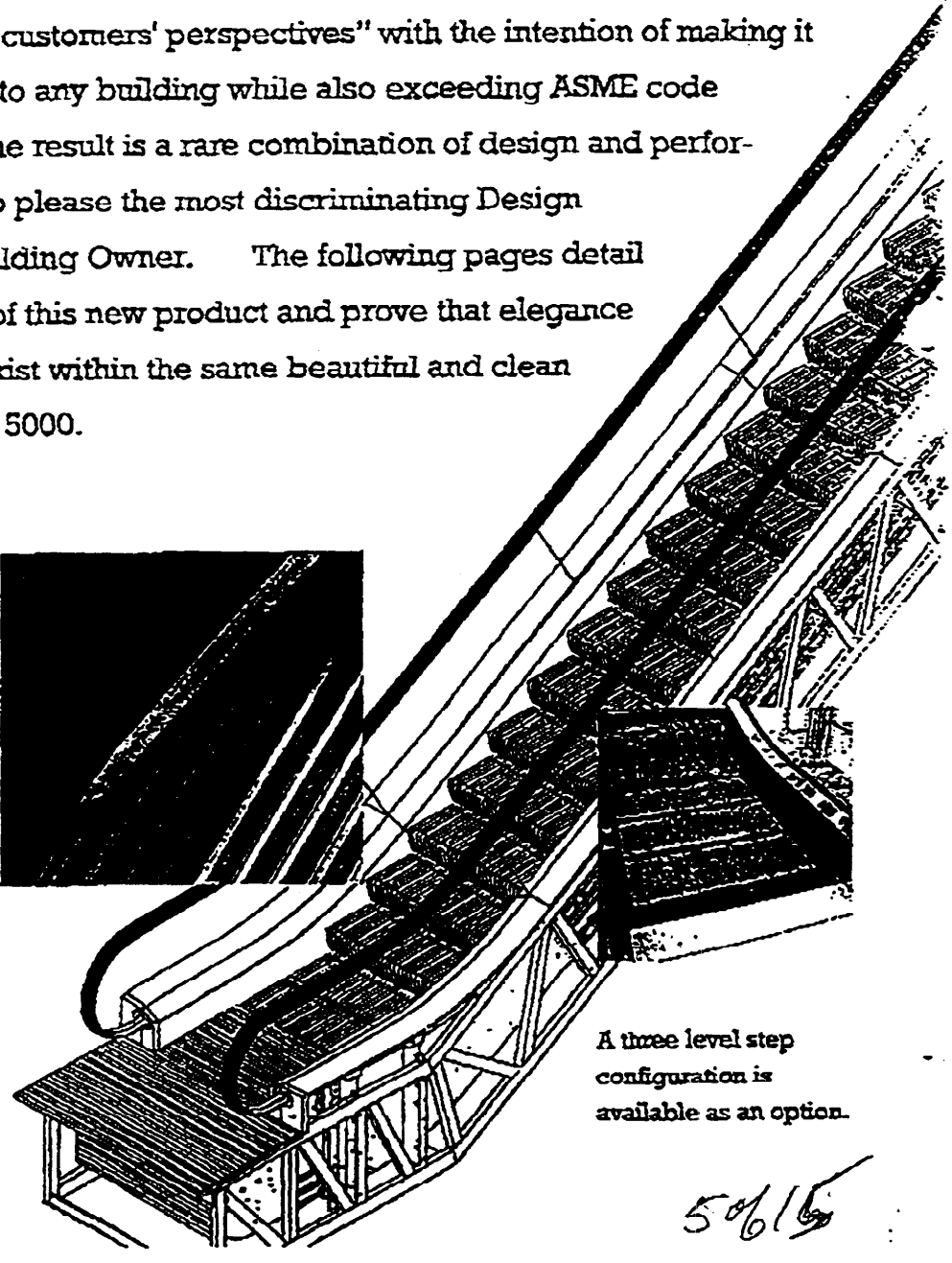

A three level step configuration is available as an option.

5 of 15

Montgomery KONE

E-SERIES 5000®

FEATURES

A blend of elegance and symmetry, the E-SERIES 5000 escalator is more than what meets the eye. In addition to a beautiful exterior, improved passenger safety was a main driving force behind the development of the E-SERIES 5000. The result of this attention is an escalator that surpasses the Escalator Code safety requirements for the protection of the riding public. Montgomery KONE Inc. is proud of all the advancements that we have made in the E-SERIES 5000.

An explanation of the features and details of the E-SERIES 5000 is found on the following pages:

➢ Step to Skirt Clearance:

The E-SERIES 5000 is designed to reduce the step to skirt clearance through a patented step guidance system. This system positions each step between the skirt panels by using rollers, mounted on each end of the step axle, to ride on a track mounted below the skirt and to guide the steps down the incline independent of the chain. This arrangement positions each step between the rigidly mounted skirt panels and guides them along their path. Side to side movement of the step is controlled and a nominal clearance of less than 1/16" between the step and skirt is maintained.

➢ Skirt Stiffness:

The skirt panels on the E-SERIES 5000 have been stiffened with horizontal channels and mounted rigidly to the escalator truss. This, reduces skirt deflection and the resulting gap between the skirt and step caused by the force of an object pushing against the skirt.

➢ Step Combing:

Reducing the possibility of objects becoming caught between the step and combplate is the main purpose of the escalator comb segments. The comb segments have fingers that mesh with the grooves on the surface of each step help o sweep out objects in the groove. Montgomery KONE has modified the design of the Estaloc® comb segment by refining the profile of the comb teeth. Objects in the step grooves are more apt to be swept out of the step groove by the combing action of the redesigned Estaloc® comb segments.

6 of 15

STEP SAFETY SIDEPLATES™ / CANOPY GUARD AND LATERAL STEP GUIDANCE DEVICE.

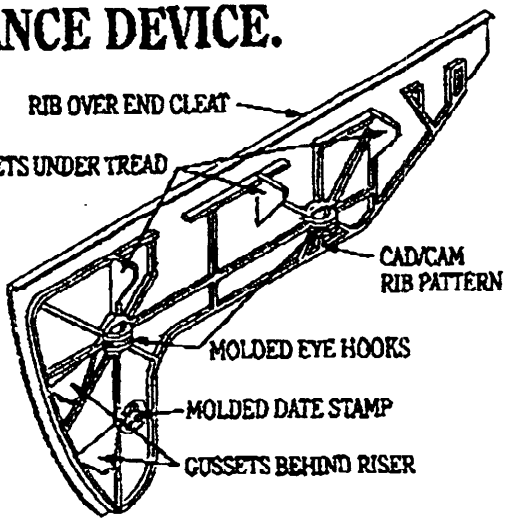

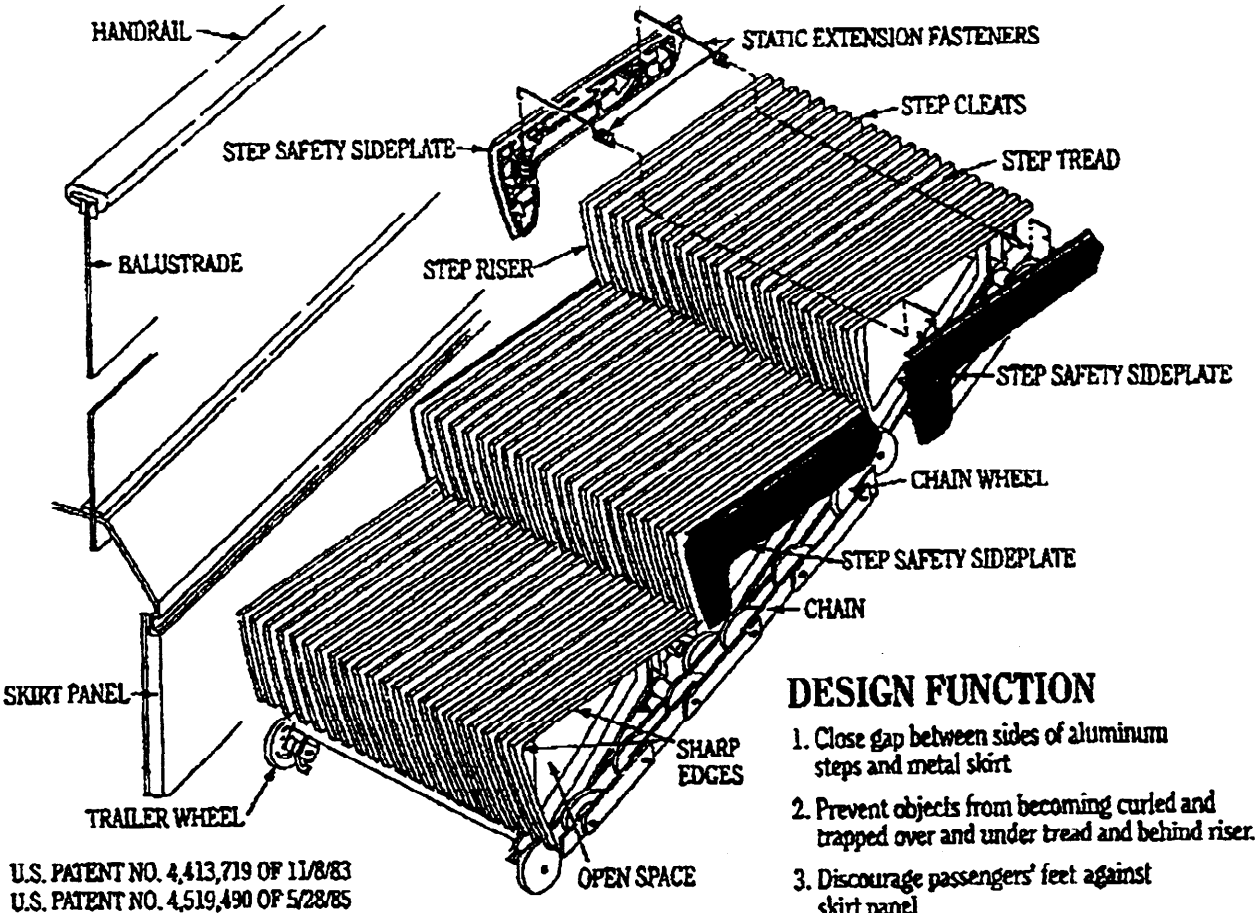

DESIGN FUNCTION

1. Close gap between sides of aluminum steps and metal skirt
2. Prevent objects from becoming curled and trapped over and under tread and behind riser.
3. Discourage passengers' feet against skirt panel
4. Barrier from inflammable objects and dirt entering escalator
5. Lateral step, wheels, and chain guidance.

U.S. PATENT NO. 4,413,719 OF 11/8/83
U.S. PATENT NO. 4,519,490 OF 5/28/85
CANADIAN PATENT NO. 1,187,441 OF 5/12/85
ITALIAN PATENT NO. 1,159,267 OF 2/25/87
EUROPEAN PATENT NO. 0079957 OF 1/27/88

COPYRIGHT 1990 CARL J. WHITE & ASSOCIATES, INC.

7615

STEP SAFETY SIDEPLATES™ / CANOPY GUARD AND LATERAL STEP GUIDANCE DEVICE.

Technical Description.

Each STEP SAFETY SIDEPLATE™ contains an internal lubricant so that contact between the moving step and skirt panel has no effect on the efficiency of the escalator drive. They have a dynamic coefficient of friction of 0.15 against steel measured by the ASTM D 1894 test method and are unaffected by a wide range of acids, oils, greases and solvents. They also have a UL fire rating of HB-94, better than the step wheels and handrail materials.

Each type of escalator step has an individually designed STEP SAFETY SIDEPLATE™ and separate tooling. The parts are single cavity injection molded in a 300-ton machine. Each part is hand clamped in a specially made fixture to create a desired bend while curing. The injection sprue is hand cut and drilled flush.

Each piece has an injection molded date stamp for quality assurance purposes. Both design tolerances and fit to the steps are checked throughout the manufacturing process.

The reinforcement rib pattern was CAD/CAM designed for rigidity and impact resistance. The boomerang shape is for ease of step handling.

There are three different lengths of sideplate attachment fasteners for 24"(600mm),32"(800mm)and 40"(1000mm) nominal width steps. Each is computer designed and made of certified ASTM A-227 pre-galvanized hard drawn carbon steel spring wire and stress relieved to 500-degrees F (260 C).

Ribs over and under the tread and behind the STEP SAFETY SIDEPLATE™ riser mechanically locks the sideplates into the hollow nest of the step. The spring fasteners provide lateral tension to hold the plates against the step and to prevent over/under tightening.

Specifications.

The steps shall be provided with high strength, internally lubricated, black copolymer STEP SAFETY SIDEPLATE™ guards securely attached to each side of the metal steps which shall extend not less than 3"(76.2mm) inches below the sides of the step tread and behind the riser. Adjacent skirt panels shall be adjusted plumb with a maximum running clearance gap of not more than 1/16" (.0625mm) at any point between the STEP SAFETY SIDEPLATES™ and skirt panels to reduce the possibility of objects becoming entrapped and their being curled over the sides of the step. The STEP SAFETY SIDEPLATES™ shall be as manufactured by Carl J. White & Associates, Inc.

Carl J. White & Associates, Inc.
Elevator & Escalator Consultants
P.O. Box 60340 / Colorado Springs, Colorado / 80960-0340

For a copy of THE ESCALATOR SIDEPLATE™ STORY VCR and further information about this major escalator safety development please contact your escalator maintenance contractor or call 1-800-626-3555 in both the U.S. and Canada.

§10.26A ANSI Standard for Product Safety Signs and Labels

ANSI Standard Z535.4 Product Safety Signs and Labels (June 1991) sets forth a hazard communication system developed specifically for product safety signs and labels. Requirements for signs and labels used with hazardous chemicals, as defined in ANSI Z129.1 (1982), are not included in the scope of the standard. Product safety signs and labels are classified according to the relative seriousness of the hazard situation. The determination is based on an estimation of the likelihood of exposure to the hazardous situation and what could happen as a result of exposure to the hazard.

For products, there are three hazard classifications which are denoted by the signal words DANGER, WARNING, and CAUTION. DANGER indicates an imminently hazardous situation which, if not avoided, will result in death or serious injury. This signal word is to be limited to the most extreme situations. WARNING indicates a potentially hazardous situation which, if not avoided, could result in death or serious injury. CAUTION indicates a potentially hazardous situation which, if not avoided, may result in minor or moderate injury. It may also be used to alert against unsafe practices.

A product sign or label consists of a signal word panel plus a message panel. The signal word panel is the area of the safety sign containing the signal word. The message panel is that area of the safety sign containing the messages which identify the hazard, indicate how to avoid the hazard, and advise of the probable consequences of not avoiding the hazard. A pictorial panel may be used to communicate part, or all, of the elements of a message panel. A *pictorial* is a graphic representation intended to convey a message without the use of words. It may represent a hazard, a hazardous situation, a precaution to avoid a hazard, a result of not avoiding a hazard, or any combination of these messages. The latest draft of the standard notes that when a symbol/pictorial is used to convey any of the messages, the message(s) conveyed by the symbol/pictorial are not required to be repeated in word form in the message panel.

9 of 15