would reduce the ability for something to be caught between the step and the skirt. The thrust of their testing was a comparison of various lubricants available on the market at the time and also how it reacted to the various types of material being used in skirts by the various companies. These results then could be used by various people as a guide to the selection of the material they would use as the lubricant or friction reducing material applied to the skirts of their escalators. There were some 4000 individual tests conducted in connection with this particular study.

Section 14 is additional testing on skirts and lubricants conducted by Leo Raisbeck hired by Montgomery in the 1984-85 time period. The same test procedures and materials were used in these tests as in the prior tests in the 1977-78 time period.

We performed these tests because in the intervening years, there were reports advocating that the step gap should be kept to a minimum. We had always kept our gap at 1/8". These tests were limited to a step gap of 1/64th, 1/32nd, or 1/16th of an inch (section 14). There was also a product on the market which was a teflon impregnated aluminum material skirt. In this series of tests, there were some 9500 individual tests conducted using the teflon impregnated aluminum and silicone applied to the teflon impregnated skirts. Additionally, we tested the small step gap and a skirt which we developed using an extrusion rather than our hat bracket system. There were no catches that were obtainable. These tests confirmed our prior conclusions.

In 1985 (section 15), a series of load deflection tests were run on porcelain enameled skirts and the new aluminum impregnated teflon skirts. The tests were conducted with the skirt panels installed in an escalator as they would be on the finished product in the field. The forces that were applied to the skirt varied from 0 to 150 pounds in 20 pound increments at two locations on the skirt panel. One point was a line 3 inches down from the top of the skirt panel as the steps travel up and down and the other point was approximately 1 inch above the bottom edge of the skirt. The results of the tests are shown in Tables 1-6 of section 15.

A 1981 code provision required that the skirt deflect less than 1/16 of an inch under 150 pounds of pressure and these tests indicate that those skirts tested under this section complied with that provision.

During all this time, our experience showed a lowering number and severity of entrapment incidents.

Section 16 indicates a series of on-going activities by Montgomery.

Section 17 gives the 1985 test results of various types of skirt materials and also skirts manufactured not only by Montgomery but also by KONE. At this point in time, we were able to obtain some silicone materials which KONE used for their skirts and which Thyssen used for applying to their skirts. This showed the co-efficient of friction using

the standard dry porcelain or stainless steel skirts to be a very low number using the teflon impregnated aluminum type skirt and applying silicone to it.

Section 18 was performed by Harold Sharp in 1987 and was a more controlled type testing and compared not only the same KONE materials but a krylon silicone spray which Montgomery found and would use.

Section 19 was also performed by Harold Sharp in January 1988 with regard to skirt deflection.

Section 20 is a review of some jobs which we had shipped based on some earlier testing whose escalators now contain the aluminum impregnated type of skirt. Because aluminum is softer than either the stainless steel or porcelain faced skirts, there was some question in our minds as to how the aluminum would stand up due to the rubbing and scraping of objects with an escalator in operation.

Such a comparison or status would of course have to be based on some time that the units have been in operation in the field. Some of the first units installed are in Denver and Seattle and these were jobs where turnover to the customer was in late 1986.

In order to see first hand, I then undertook a trip which visited all the stores involved from Denver, Seattle, Salt Lake City, and Albuquerque. The result of all those units and

that investigation was that all units were in good shape and I was told there were no reported accidents that the owners were aware of. This procedure was done in December of 1988, approximately 2 years after all the units had been running and open for the public.

We had been aware that Otis had started using the teflon impregnated type of skirt in approximately 1984. This is what they referred to as the guardian skirt. One of the first three installations was at a Lord and Taylor department store in Coral Springs, FL. In January of 1989, I visited the store and examined those escalators quite closely. After some five years of operation, they looked good and there was no scraping, scratches, or other marks there that would render it less effective than, for example, the type of harder surface materials we were using ~~on~~ for our teflon impregnated skirt.

Section 21 is a skirt deflection test conducted in 1992 to establish that the skirts and their supports being considered for the new Model 5000 could still meet the deflection requirements as pointed out in A17.1. The results of this testing showed that the new skirt design and mounting fell well within the requirements of the A17 code.

Section 22 is another series of tests conducted in 1993 involving materials that can be added to the end of the step to close the gap between the step and the skirt. Some of these are commercially available and others are under study. The net result of all these tests, again, shows clearly that the primary way to prevent the step skirt type entrapment

is to ride it properly and the second most important factor is the need to properly use a silicone skirt surface. Skirt deflection and gap are factors, but to a smaller degree.

Section 23 (December 1993) shows the skirt deflection testing on the skirt on a solid balustrade escalator in the lower curve area and in the area of the skirt switch. The results of this test show that the skirt did not deflect more than the 1/16 of an inch as required by the A17 code.

Section 24 clearly shows that reports of a commercially available plastic step piece to close the gap between the step and the skirt recommends, as we always have, that the skirts need to have a friction reducing material sprayed on and a small gap between the step and skirt.

Over the years, we and our competitors have been unable to totally eliminate these incidents. However, it is clear that the four points we isolated are the major factors in causing this phenomena.

During the past five years, a great amount of publicity was given to a commercially available step side plate that would close the gap between the step and skirt and alleviate the step skirt entrapment.

In actual use, the step must still run free so there is nothing touching the skirt.

If the plastic piece breaks, then there is a danger of catching material between the steps and skirt due to broken plastic.

The supplier acknowledges that even with the plastic side plate, they still need a running clearance and advises customers to silicone the skirts.

These recommendations are in line with the tests and results acquired during the 1976-77 original testing.

ITEM 1.15
BALUSTRADES

1.15.1 Routine

Inspect the balustrades and note any cracked or broken panels. Panels and fasteners should be smooth and free of burrs and snag points. Interior panels or molding must not be raised or depressed by more than ¼ in. (6.4 mm). Check that the balustrades are totally enclosed along both exterior and interior lengths, except where the handrail enters the newel base. For escalators installed under the A17.1-1982 and later editions and A17.3, if gaps exist between interior panels, they should not be wider than 3/16 in. (4.8 mm) and the edges should be beveled or rounded.

On high deck escalators installed under A17.1-1981 and later editions and A17.3, check that anti-slide devices are in place and secure (see Fig. 1.15.1).

1.15.2 Periodic

1.15.3 Acceptance

Verify that the balustrades are adequately supported and meet the material, strength, and dimensional requirements.

Glass or plastic (except plastic bonded to basic support panels), if used, should meet the requirements of the ANSI Z97.1. The glass or plastic (glazing material) must be legibly and permanently marked "American National Standard Z97.1" or the characters "ANSI Z97.1" and must also be marked with the manufacturer's distinctive mark or designation.

1.15.4 References

A17.1 — Rules 802.3 and 1009.2g; and Appendix D.
A17.3 — Paragraph 5.1.1.

ITEM 1.16
CEILING INTERSECTION GUARDS

1.16.1 Routine

Escalators installed under A17.1-1978 and later editions where the clearance of the exterior deck and the ceiling or soffit is 12 in. (305 mm) or less or where the projected intersection of the exterior deck and ceiling or soffit is 24 in. (610 mm) or less from the adjacent handrail centerline, require ceiling intersection guards. This requirement was restricted to high decks for escalators installed under A17.1-1982 and later editions and A17.3 (see Fig. 1.16.3).

On low decks for escalators installed under A17.1-1982 and later editions and A17.3, where the centerline of the handrail is 14 in. (356 mm) or less from the ceiling or soffit, guards are also required.

Inspect the guards for damage and secure attachment.

1.16.2 Periodic

1.16.3 Acceptance

Verify that ceiling and soffit guards are correct size, in place, and secure.

1.16.4 References

A17.1 — Rule 802.3g; and Appendix D.
A17.3 — Paragraph 5.1.3.

ITEM 1.17
SKIRT PANELS

1.17.1 Routine

Check the clearance between the skirt panel and the step using a thickness gauge or by laying a small rule on the edge of the step to read the distance. Several steps should be checked through their entire travel. The allowable clearances are as follows (see Fig. 1.17.1):

(a) A17.1-1955 through A17.1d-1970: not more than 3/16 in. (4.8 mm) with a total of both sides not more than ¼ in. (6.4 mm), except where skirt obstruction devices are installed at the lower entrance for escalators installed under the A17.1-1965 through A17.1(d)-1970.

(b) A17.1-1971 through A17.1-1979 editions: not more than ⅜ in. (9.5 mm) on each side.

(c) A17.1-1980 and later editions and A17.3: not more than 3/16 in. (4.8 mm) on each side.

For escalators installed under A17.1a-1982 and later editions, inspect the exposed surface of the skirt panel to determine that it is either made from a low friction material or treated with a friction reducing material. The skirt panels of escalators installed prior to A17.1a-1982 should also be treated with a friction reducing material. The panel should be tested at several places during the run and especially near the transition entrance and exit. If examination of the panels raises a question about the friction of the skirt panels, the manufacturer's recommendation should be requested and compared to the treatment schedule if available. If skirts are treated, examine the steps to verify that friction reducing treatment has not been applied on them.

[ED] **1206.2e Refinishing of Elevator Cars.** Particular care shall be used when refinishing elevator cars in the hoistways.

Rule 1206.3 Refastening or Resocketing of Car Hoisting Ropes on Winding Drum Machines

1206.3a Refastening Periods. The hoisting ropes of power elevators having winding drum driving machines with 1:1 roping, if of the babbitted rope socket type, shall be resocketed or other type of fastenings replaced or moved on the rope to a point above the existing fastening, at the car ends at intervals not longer than:

(1) for machines located over the hoistway, 1 year;

(2) for machines located below or at side of the hoistway, 2 years.

(3) Where auxiliary rope-fastening devices conforming to the requirements of Rule 212.10 are installed, refastening at the periods specified is not required provided that, where such devices are installed, all hoisting ropes shall be refastened on the failure or indication of failure of any rope fastening.

1206.3b Procedure. In resocketing babbitted rope sockets or replacing other types of fastenings, a sufficient length shall be cut from the end of the rope to remove damaged or fatigued portions. The fastenings shall conform to the requirements of Rule 212.9.

Where the ropes extend beyond their clamps or sockets, means shall be provided to prevent the rope ends from coming out of the inside of the drum and to prevent interference with other parts of the machine.

1206.3c Tags. A metal tag shall be securely attached to one of the wire rope fastenings after each resocketing or changing to other types of fastenings, and shall bear the following information:

(1) the name of the person or firm who performed the resocketing or changing of other types of fastenings;

(2) the date on which the rope was resocketed or other types of fastening changed.

The material and marking of the tags shall conform to the requirements of Rule 207.3c, except that the height of the letters and figures shall be not less than $^1/_{16}$ in. (1.6 mm).

Rule 1206.4 Making Safety Devices Inoperative

No person shall at any time make any required safety device or electrical protective device inoperative, except where necessary during tests, inspections, and maintenance. Such devices shall be restored to their normal operating condition in conformity with the applicable requirements immediately after the test (see Rule 210.7).

Rule 1206.5 Maintenance of Hydraulic Elevators and Dumbwaiters

1206.5a General. The maintenance of hydraulic elevators and dumbwaiters shall conform to the requirements of Rules 1206.1, 1206.2, and 1206.4.

1206.5b Additional Requirements

(1) Pressure tanks shall be thoroughly cleaned internally at least every 3 years and prior to the inspection and test required by Rule 1005.3c.

(2) Piston rods or roped-hydraulic elevators and dumbwaiters shall be thoroughly cleaned at least every 3 years and prior to the inspection required by Rule 1005.3b.

(3) The liquid level in pressure tanks should be maintained at about two-thirds of the capacity of the tank.

(4) Valves and cylinders shall be kept properly packed and the packing glands shall be periodically tightened to prevent loss of the fluid.

(5) Oil leakage collected from the cylinder packing gland shall not exceed 5 gal (0.019 m^3) (see Rule 302.3g).

(6) Flexible hose and fitting assemblies shall be [94a] replaced by the date indicated on the existing equip- [95b] ment. Hose assemblies that do not indicate a replacement date shall be replaced. Replacement shall conform to the requirements of Rule 303.3c(1)(e).

Rule 1206.6 Maintenance of Escalator and Moving Walks

1206.6a Cleaning. The interiors of escalators, mov- [95b] ing walks, and their components shall be periodically cleaned to prevent an accumulation of oil, grease, lint, dirt, and refuse. The frequency of the cleaning will depend on service and conditions, but an inspection to determine if cleaning is necessary shall be required at least once a year.

1206.6b Escalator Skirt Panels. The exposed surface of the skirt panels adjacent to the steps, if not made from, should be treated with, a friction reducing material.

Rule 1206.7 Maintenance of Firefighters' Service

All elevators provided with firefighters' service shall be subjected monthly to Phase I recall and a minimum of one-floor operation on Phase II to assure the system is maintained in proper operating order. A written record of findings on the operation shall be made and kept on the premises of said operation.

Carl J. White & Associates, Inc.

ELEVATOR & ESCALATOR CONSULTANTS

AIRPORT INDUSTRIAL PARK

5755-A INDUSTRIAL PLACE COLORADO SPRINGS, CO 80916-1797

(719) 550-0660 FAX (719) 550-0978

July 18, 1997

Mr. Nick Marchica
Director, E.S.M.E.
U.S. CONSUMER PRODUCT SAFETY COMMISSION
ESME, Room 611-20
4330 East West Highway
Bethesda, Maryland 20814

RE: OS No. 3523 CP 97-1 (Petition of Scott & Diana Anderson)
Dated April 9, 1997
Step-to-Skirt Clearance

Dear Mr. Marchica:

The subject petition requests, among other things, "...closing the gap between the moving stair and sidewall."

As can be seen in the two attached pages from Haughton Elevator Company manuals, the escalator industry has been capable since at least 5/74 (May 1974) of operating escalators with a 1/16" step-to-skirt clearance. Also attached are two pages from Montgomery KONE's 1996 E-Series 5000® escalator brochure wherein they also are able to operate at 1/16" and even state "This far exceeds the minimum ASME Code requirement of 3/16" on each side of the step" (Rule 802.3e of AS17.1 - 1996).

On existing escalators, this 1/16" clearance can be accomplished with the "Step Safety Sideplates/Canopy Guard And Lateral Step Guidance" which are internally lubricated thermoplastic panels which attach to the sides of escalator steps thus permitting the new sides of the otherwise exposed aluminum sides of the steps to contact the normally stainless steel skirt panels and/or to minimize the step-to-skirt clearance. They also prevent "a wringer action" or "curling" of an object over the sharp side of the aluminum step should an object become caught due to a misaligned or deformed skirt panel. This device is more thoroughly described in the attached Illustration, Technical Description and Specifications sheet.

We would like to encourage the Commission to mandate a step-to-skirt panel clearance of not more than 1/16" on each side of the steps for both new and existing escalators.

Very truly yours,

CARL J. WHITE & ASSOCIATES, INC.

Carl J. White
President

CJW:dw
Enclosures

STEP CLEARANCE

The clearance of the step cleats through the comb teeth is extremely critical. This relationship plays an important role in reducing accidents. The skirts on the Haughton unit are normally set for 1/16" running clearance with the step. Code allows 3/8" each side.

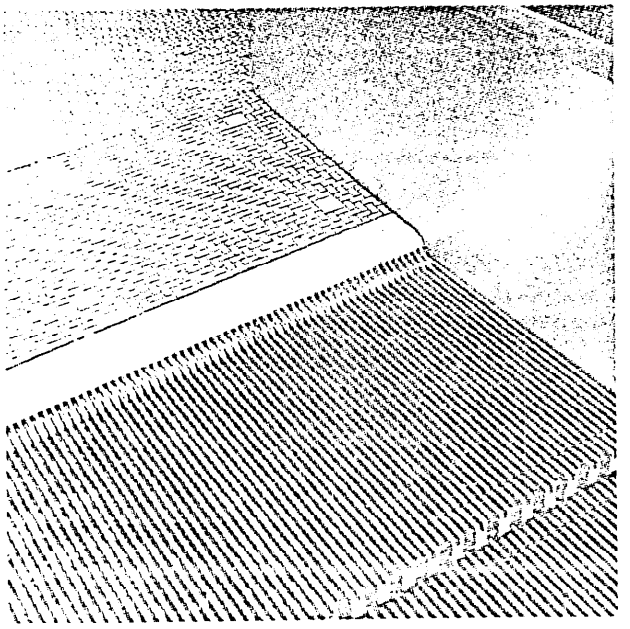

The riser meshes with the step cleat extensions. Clearance between tread and riser is designed for 1/8". The mesh between riser cleats and step cleats is a safety feature reducing the shear hazard as the steps articulate from a step formation to a treadway at both the upper and lower landing.

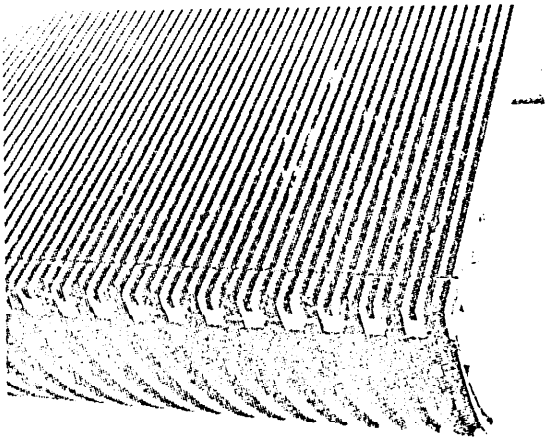

Photos indicate clearance of steps under combplate and in the upper head drive machine space.

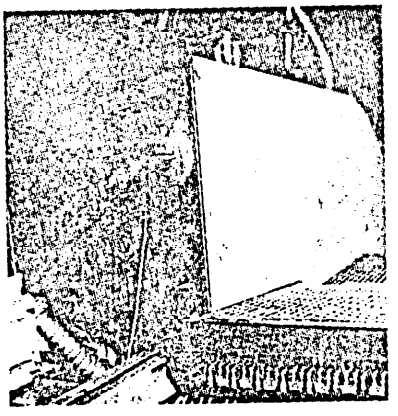

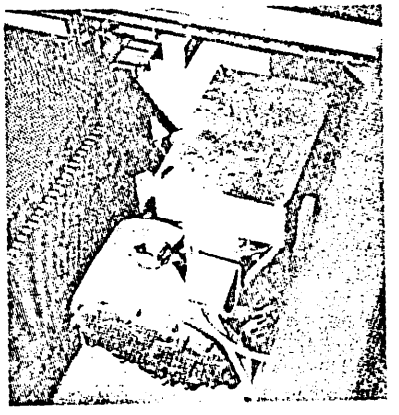

HAUGHTON ESCALATOR MAINTENANCE

TYPE "HC"

1b. CLEANING

Cleaning of the exterior, i.e., trim decks, panels, and landings, is not considered a part of the Escalator maintenance; this generally comes under the scope of the regular interior building cleaners or janitor service.

It should be called to the attention of responsible parties, however, that steps and floor plates must not be subjected to free water mopping or scrubbing. Electrical fittings are not waterproof (unless specially specified) and moisture in them may give rise to trouble. Also, strong cleaning agents may affect the finish of the Escalator equipment.

The step running clearances are as small as practical engineering will permit, but bits of paper, cloth ravelings, match sticks, etc., will filter through. If this refuse is allowed to accumulate indefinitely, a fire hazard will exist. Should an electrical flash, even static, occur, or a careless smoker drop a lighted cigarette or match, a fire could be started. Clinging lint and oil-soaked debris can burn with explosive rapidity and create intense heat.

Most of the ordinary cleaners, such as naptha, create a considerable fire hazard. Carbon tetrachloride is a good cleaner, but it is highly toxic and can be dangerous to those using it in confined places.

After some investigation, a few cleaning solvents have been located that are not classed as seriously toxic or inflammable, and they work very well when directions are followed.

One is known as "Penolene #643" and can be purchased from the Penetone Company at 74 Hudson Street, Tenafly, New Jersey. It is not recommended for continuous use on finished aluminum.

Another cleaning solvent is "Methol Chloroform." It is a product of the Amsco Solvents and Chemical Company at 4619 Reading Road, Cincinnati, Ohio 45229.

These cleaning solvents are not expensive. One half gallon will clean an average unit. Note: Cleaning solutions dry the skin quickly, and all users should be cautioned to wear rubber gloves.

DAILY TELEGRAPH - TUESDAY, JANUARY 26, 1988

King's Cross fire set off by match, inquiry is told

By Lin Jenkins

THE KING'S CROSS Underground fire, which claimed 31 lives, would probably have been put out in its early stages had the water sprinkler system been in operation, or had someone used the fire extinguisher, the preliminary hearing of the public inquiry into the tragedy heard yesterday.

Experts showed a "remarkable degree of consensus" in believing that the fire was started by a lighted match falling down the skirting board of the escalator on to a quantity of grease and fluff.

Fuelled by the peeling paint of the ceiling, heated to a high temperature by burning wood in the escalator, the fire caused a "flash-over" into the ticket hall, where most of the victims perished.

Mr Roger Henderson, QC, for the Treasury solicitor, outlining the areas of agreement between forensic experts and scientists, levelled particular criticism at London Regional Transport.

In referring to the "water fog system" at the station, which was not used at the time, he said: "The consensus believes it would or might have been adequate to extinguish the fire." It would probably have prevented the deadly flash-over.

The possibility of an electrical fault could never be completely excluded "because of the poor quality of maintenance of electrical machinery in that area."

He said that the fire in number four escalator linking the Piccadilly Line with the ticket hall on Nov 18 last year could perhaps never be fully explained because of its magnitude.

However, although deliberate dropping of lighted material could not be ruled out, no accelerants had been found, and there was no evidence of deliberate fire raising. Nor had the cleaning fluid used or stored nearby played any part in fuelling the blaze.

"It is probable that it ignited just below halfway up the escalator in an accumulation of grease, fluff and debris, resulting most probably from a lighted match dropping between the skirting board on the right-hand wheel trap of the treads."

Substantial quantities of debris, including grease 30mm deep and 170mm wide, had been found six inches below the skirting board. Discarded matches and cigarette ends had been found elsewhere in the escalator.

Controlled tests on a lower section of the same escalator carried out on Jan 8 had shown that a lighted match would ignite the material, where three burning cigarette ends failed to do so. Charring from similar incidents had been found elsewhere on the escalator and on the one adjoining.

But, such a theory was "plainly not the view of all the experts," Mr Henderson told Mr Desmond Fennell QC, head of the inquiry, at Church House, Westminster.

There was the possibility that it could have been caused by a cigarette, that the match could have been ignited by a moving part of the escalator or that such friction could itself have caused a spark.

Once the fire began, he said, the water fog system could have helped, but the degree would depend on where a sprinkler outlet was positioned and how quickly it was turned on.

The fire spread from the wheel track to the skirting board and on to the balustrade and treads and rises, before igniting the wall panelling and ceiling. It also spread through the decking to escalator number 5.

Experts disagreed on what caused the flash-over into the ticket hall. Some thought the paint on the ceiling was "in itself or when it became de-laminated" a major contributing factor.

Others investigating the cause of the horrifying spread of flames concluded it had been fuelled by the "piston effect" of the trains in the tunnels, whether they stopped or not. Another expert believed simply that the fire followed traditional patterns of those experienced in mines.

"There is a theory by the Health and Safety Executive of a clockwise vortex of flames and heat, which had the effect that, although the ceiling was badly damaged, it did not burn the recessed light fittings."

Mr Henderson said there was also dispute about an assertion from the London Fire Brigade that there was "an accumulation of inflammable substances in the ticket hall."

Because of the varying theories, further tests would have to be conducted.

The flash-over, however, was probably caused "by paint on the ceiling of the shaft being heated to a high temperature, especially by wood in the escalator shaft and by wall panels, such that it ignited and de-laminated," and either by movement of trains or normal combustion there was a sudden outburst from the shaft to the ticket hall.

This view was supported by much evidence, including on report which suggested ther were anomalies in the applic tion of the paint, P2 Prodorite.

Other issues which had sti not been resolved would be th subject of further investigatio These included whether th false ceiling had any bearing c the scale of injuries and fatal ties; what paint had been use on the hoardings present in th ticket hall, and whether th flooring in the ticket hall ha acted as fuel for the fire.

Mr Fennell adjourned th hearing until next Monday Central Hall, Westminste where they would begin hearin evidence from survivors. Som statements would be read, a the victims were still too ill t attend the inquiry.

Investigators are still tryin to identify one of those killed i the fire, a white man age around 50, 5ft 2in tall, an showing signs of having had

Picture: ERIC KOBE

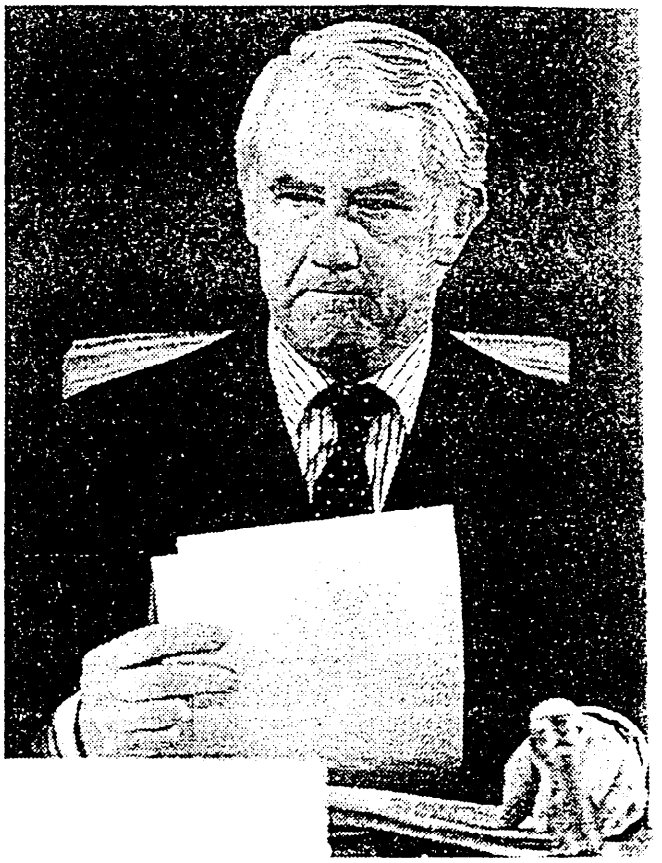

Mr Desmond Fennell QC, head of the inquiry

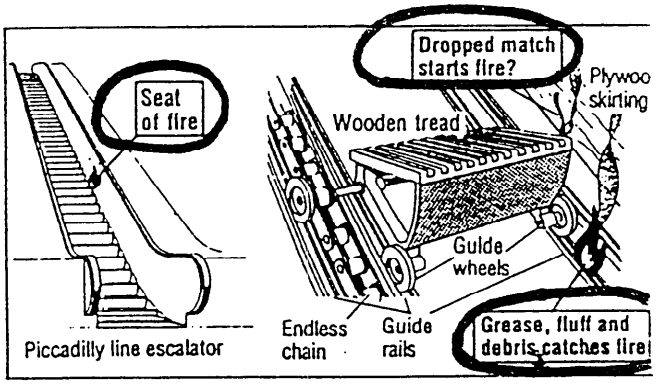

A match probably started the fire, the inquiry was told

Escalator safety is important to everyone. That's why we designed the E-Series 5000 with significantly improved safety features.

A unique blend of elegance and safety, the E-Series 5000 was designed with concern for not only how it will add to the aesthetics of your building, but also for the safety of your customers as well. The E-Series 5000 escalator was designed from our "customers' perspectives" with the intention of making it an elegant addition to any building while also exceeding ASME code requirements. The result is a rare combination of design and performance that is sure to please the most discriminating Design Professional and Building Owner. The following pages detail innovative features of this new product and prove that elegance and safety can co-exist within the same beautiful and clean lines of the E-Series 5000.

New patented step guidance system reduces the clearance between the steps and the skirt panels to a nominal 1/16". This far exceeds the minimum ASME code requirement of 3/16" on each side of the step. Steps are laterally controlled to prevent side to side movement.

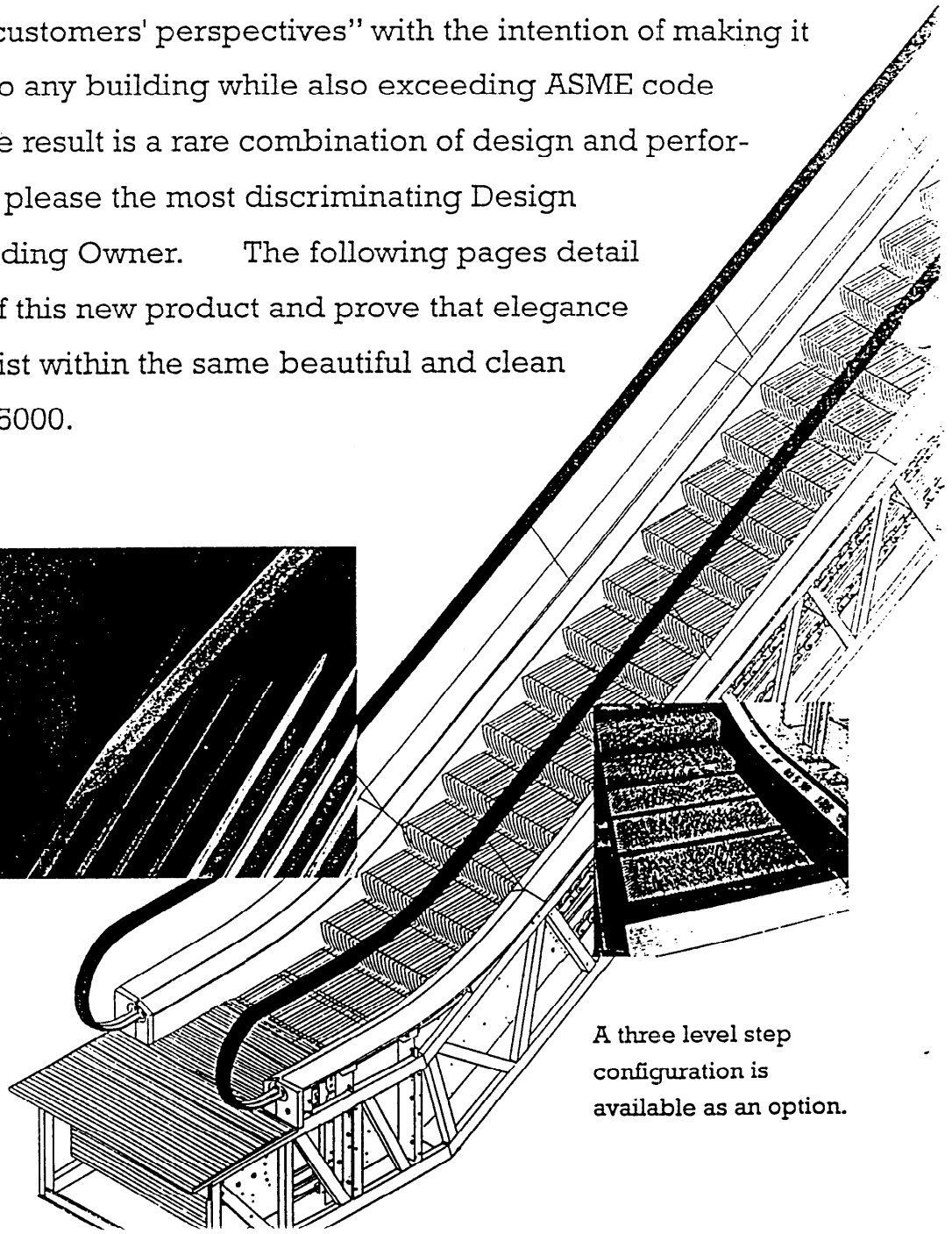

A three level step configuration is available as an option.

Montgomery KONE

E-SERIES 5000®

FEATURES

A blend of elegance and symmetry, the **E-SERIES 5000** escalator is more than what meets the eye. In addition to a beautiful exterior, improved passenger safety was a main driving force behind the development of the E-SERIES 5000. The result of this attention is an escalator that surpasses the Escalator Code safety requirements for the protection of the riding public. Montgomery KONE Inc. is proud of all the advancements that we have made in the **E-SERIES 5000**.

An explanation of the features and details of the **E-SERIES 5000** is found on the following pages:

➢ **Step to Skirt Clearance:**

The **E-SERIES 5000** is designed to reduce the step to skirt clearance through a patented step guidance system. This system positions each step between the skirt panels by using rollers, mounted on each end of the step axle, to ride on a track mounted below the skirt and to guide the steps down the incline independent of the chain. This arrangement positions each step between the rigidly mounted skirt panels and guides them along their path. Side to side movement of the step is controlled and a nominal clearance of less than 1/16" between the step and skirt is maintained.

➢ **Skirt Stiffness:**

The skirt panels on the **E-SERIES 5000** have been stiffened with horizontal channels and mounted rigidly to the escalator truss. This, reduces skirt deflection and the resulting gap between the skirt and step caused by the force of an object pushing against the skirt.

➢ **Step Combing:**

Reducing the possibility of objects becoming caught between the step and combplate is the main purpose of the escalator comb segments. The comb segments have fingers that mesh with the grooves on the surface of each step help o sweep out objects in the groove. Montgomery KONE has modified the design of the Estaloc® comb segment by refining the profile of the comb teeth. Objects in the step grooves are more apt to be swept out of the step groove by the combing action of the redesigned Estaloc® comb segments.

STEP SAFETY SIDEPLATES™ / CANOPY GUARD AND LATERAL STEP GUIDANCE DEVICE.

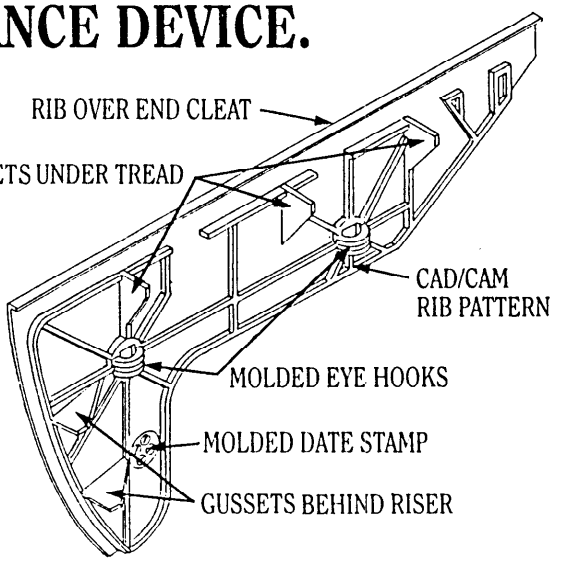

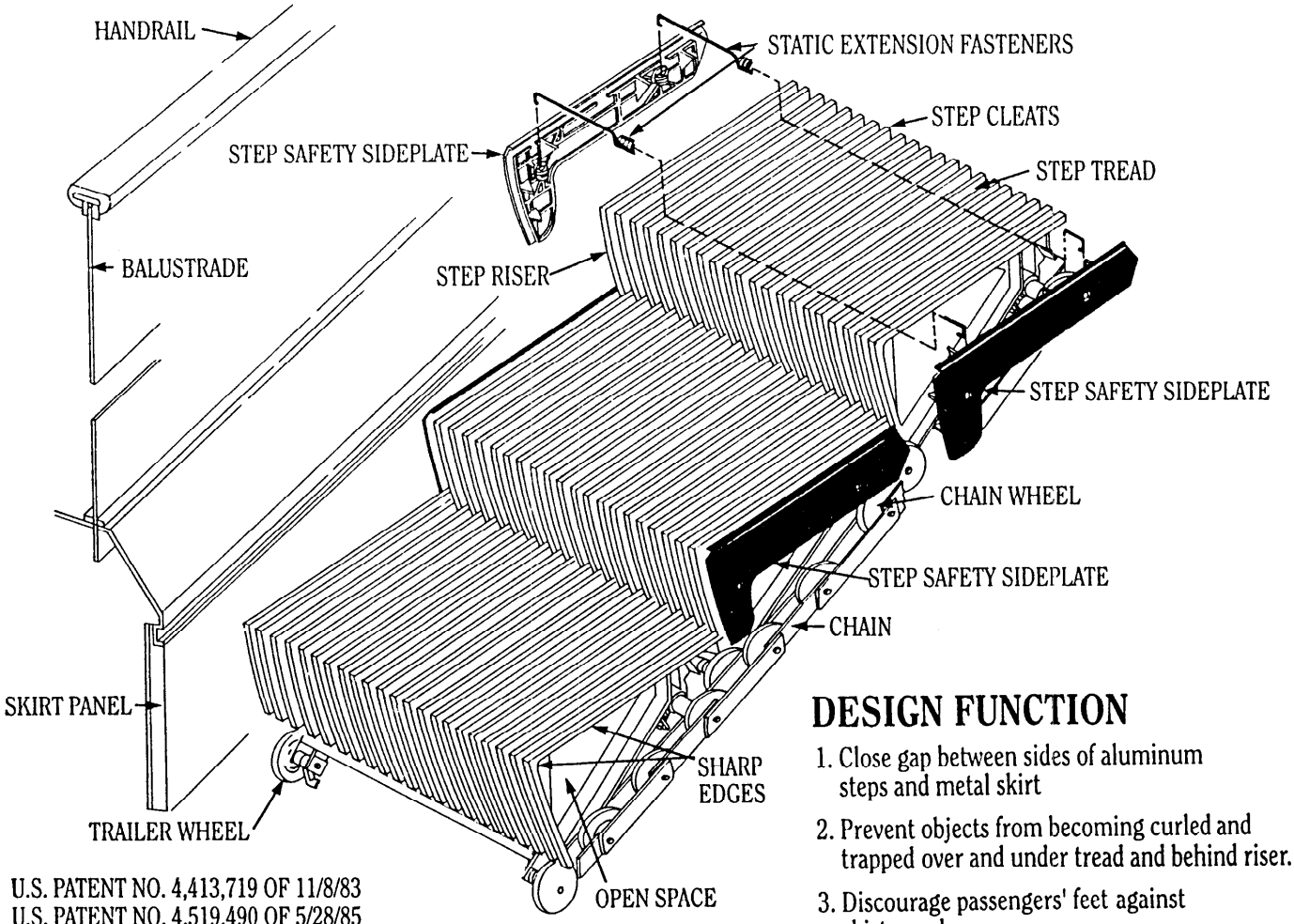

U.S. PATENT NO. 4,413,719 OF 11/8/83
U.S. PATENT NO. 4,519,490 OF 5/28/85
CANADIAN PATENT NO. 1,187,441 OF 5/12/85
ITALIAN PATENT NO. 1,159,267 OF 2/25/87
EUROPEAN PATENT NO. 0079957 OF 1/27/88

COPYRIGHT 1990 CARL J. WHITE & ASSOCIATES, INC.

DESIGN FUNCTION

1. Close gap between sides of aluminum steps and metal skirt
2. Prevent objects from becoming curled and trapped over and under tread and behind riser.
3. Discourage passengers' feet against skirt panel
4. Barrier from inflammable objects and dirt entering escalator
5. Lateral step, wheels, and chain guidance.

STEP SAFETY SIDEPLATES™ / CANOPY GUARD AND LATERAL STEP GUIDANCE DEVICE.

Technical Description.

Each STEP SAFETY SIDEPLATE™ contains an internal lubricant so that contact between the moving step and skirt panel has no effect on the efficiency of the escalator drive. They have a dynamic coefficient of friction of 0.15 against steel measured by the ASTM D 1894 test method and are unaffected by a wide range of acids, oils, greases and solvents. They also have a UL fire rating of HB-94, better than the step wheels and handrail materials.

Each type of escalator step has an individually designed STEP SAFETY SIDEPLATE™ and separate tooling. The parts are single cavity injection molded in a 300-ton machine. Each part is hand clamped in a specially made fixture to create a desired bend while curing. The injection sprue is hand cut and drilled flush.

Each piece has an injection molded date stamp for quality assurance purposes. Both design tolerances and fit to the steps are checked throughout the manufacturing process.

The reinforcement rib pattern was CAD/CAM designed for rigidity and impact resistance. The boomerang shape is for ease of step handling.

There are three different lengths of sideplate attachment fasteners for 24"(600mm),32"(800mm)and 40"(1000mm) nominal width steps. Each is computer designed and made of certified ASTM A-227 pre-galvanized hard drawn carbon steel spring wire and stress relieved to 500-degrees F (260 C).

Ribs over and under the tread and behind the STEP SAFETY SIDEPLATE™ riser mechanically locks the sideplates into the hollow nest of the step. The spring fasteners provide lateral tension to hold the plates against the step and to prevent over/under tightening.

Specifications.

The steps shall be provided with high strength, internally lubricated, black copolymer STEP SAFETY SIDEPLATE™ guards securely attached to each side of the metal steps which shall extend not less than 3"(76.2mm) inches below the sides of the step tread and behind the riser. Adjacent skirt panels shall be adjusted plumb with a maximum running clearance gap of not more than 1/16" (.0625mm) at any point between the STEP SAFETY SIDEPLATES™ and skirt panels to reduce the possibility of objects becoming entrapped and their being curled over the sides of the step. The STEP SAFETY SIDEPLATES™ shall be as manufactured by Carl J. White & Associates, Inc.

Carl J. White & Associates, Inc.
Elevator & Escalator Consultants
P.O. Box 60340 / Colorado Springs,Colorado / 80960-0340

For a copy of THE ESCALATOR SIDEPLATE™ STORY VCR and further information about this major escalator safety development please contact your escalator maintenance contractor or call 1-800-626-3555 in both the U.S. and Canada.

Consumer Product Safety Commission has asked for our input to the following:

A. A design that would close the gap between the moving stair and the sidewall;

In favor of ___**YES**___ Against _____

Remarks: As early as May of 1974, The Haughton Elevator Co. had a step-to-skirt running clearance of 1/16" per the attached two pages from their manuals. From the Montgomery KONE Elevator Co. E-Series 5000® brochure, the attached two pages show that they too can run at a clearance of 1/16" on each side of the steps. Existing escalators can be retrofitted to also operate at 1/16" clearance as illustrated and specified in the Carl J. White & Associates, Inc. "Step Safety Sideplates/Canopy Guard and Lateral Step Guidance Device" sheets attached. The C.P.S.C. should mandate a maximum gap of 1/16" for both new and existing escalators.

B. Notify the public how dangerous escalators can be and what type of accidents can occur while riding one;

In favor of ___**YES**___ Against _____

Remarks: Notices of education of the public are admirable, but designing and retrofitting escalators to be safer should be the primary objective. Safety yellow colored combplates and bright combplate lighting at the intersection of the steps and comb teeth should be mandatory among other features.

C. Creating better warning signs that will educate and inform riders;

In favor of ___**YES**___ Against _____

Remarks: The present ASME A17.1 signage titled "Caution" does not comply with and is in violation of the definitions of the "ANSI Standard Z535.4 Product Safety Signs and Labels (June 1991)" attached. The correct title should be "Warning." Pictorials such as the attached proposed sign illustrating side-of-step and falling accidents should be required at the top and bottom landings, on **BOTH SIDES** of all new and existing escalators.

After you review, please send back to NAVTP's Main Office by fax or mail before July 5, 1997.

Please only return the ballot with your comments.

Signature _____

STEP CLEARANCE

The clearance of the step cleats through the comb teeth is extremely critical. This relationship plays an important role in reducing accidents. The skirts on the Haughton unit are normally set for 1/16" running clearance with the step. Code allows 3/8" each side.

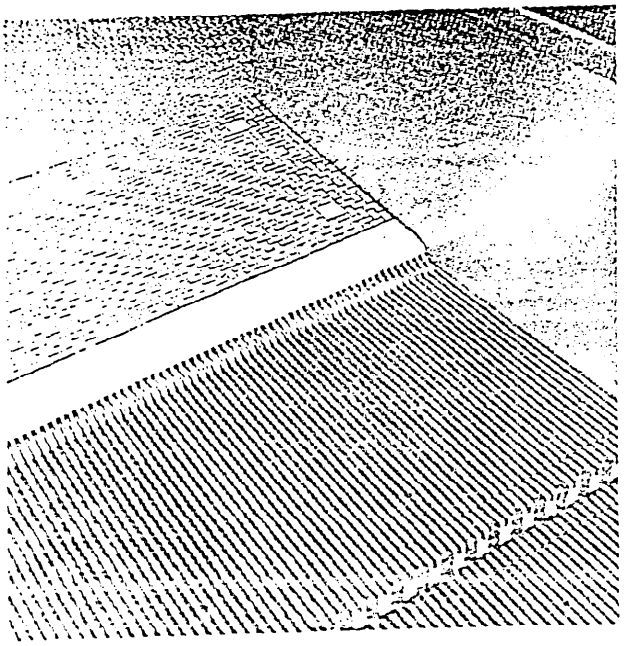

The riser meshes with the step cleat extensions. Clearance between tread and riser is designed for 1/8". The mesh between riser cleats and step cleats is a safety feature reducing the shear hazard as the steps articulate from a step formation to a treadway at both the upper and lower landing.

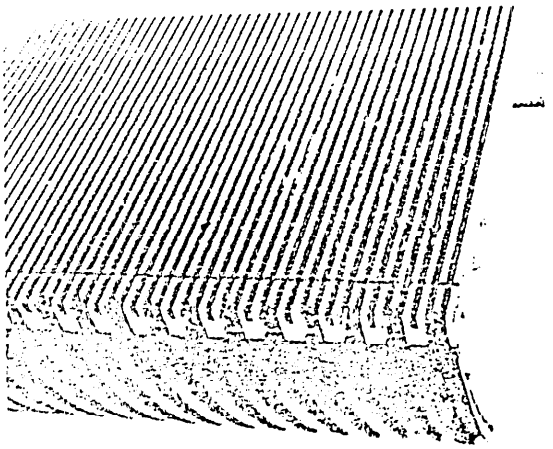

Photos indicate clearance of steps under combplate and in the upper head drive machine space.

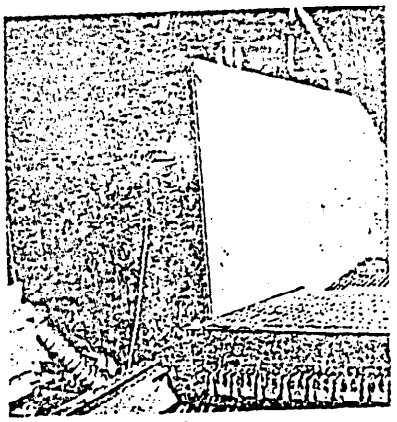

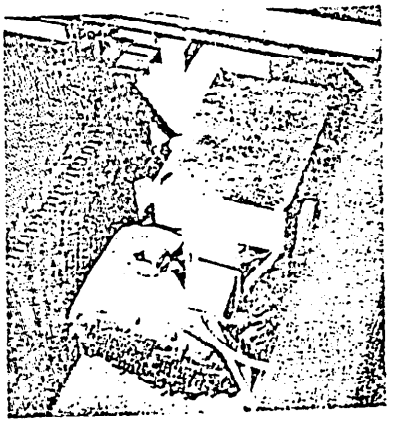

HAUGHTON ESCALATOR MAINTENANCE

TYPE "HC"

1b. CLEANING

Cleaning of the exterior, i.e., trim decks, panels, and landings, is not considered a part of the Escalator maintenance; this generally comes under the scope of the regular interior building cleaners or janitor service.

It should be called to the attention of responsible parties, however, that steps and floor plates must not be subjected to free water mopping or scrubbing. Electrical fittings are not waterproof (unless specially specified) and moisture in them may give rise to trouble. Also, strong cleaning agents may affect the finish of the Escalator equipment.

The step running clearances are as small as practical engineering will permit, but bits of paper, cloth ravelings, match sticks, etc., will filter through. If this refuse is allowed to accumulate indefinitely, a fire hazard will exist. Should an electrical flash, even static, occur, or a careless smoker drop a lighted cigarette or match, a fire could be started. Clinging lint and oil-soaked debris can burn with explosive rapidity and create intense heat.

Most of the ordinary cleaners, such as naptha, create a considerable fire hazard. Carbon tetrachloride is a good cleaner, but it is highly toxic and can be dangerous to those using it in confined places.

After some investigation, a few cleaning solvents have been located that are not classed as seriously toxic or inflammable, and they work very well when directions are followed.

One is known as "Penolene #643" and can be purchased from the Penetone Company at 74 Hudson Street, Tenafly, New Jersey. It is not recommended for continuous use on finished aluminum.

Another cleaning solvent is "Methol Chloroform." It is a product of the Amsco Solvents and Chemical Company at 4619 Reading Road, Cincinnati, Ohio 45229.

These cleaning solvents are not expensive. One half gallon will clean an average unit. Note: Cleaning solutions dry the skin quickly, and all users should be cautioned to wear rubber gloves.

DAILY TELEGRAPH
TUESDAY, JANUARY 26, 1988

King's Cross fire set off by match, inquiry is told

By Lin Jenkins

THE KING'S CROSS Underground fire, which claimed 31 lives, would probably have been put out in its early stages had the water sprinkler system been in operation, or had someone used the fire extinguisher, the preliminary hearing of the public inquiry into the tragedy heard yesterday.

Experts showed a "remarkable degree of consensus" in believing that the fire was started by a lighted match falling down the skirting board of the escalator on to a quantity of grease and fluff.

Fuelled by the peeling paint of the ceiling, heated to a high temperature by burning wood in the escalator, the fire caused a "flash-over" into the ticket hall, where most of the victims perished.

Mr Roger Henderson, QC, for the Treasury solicitor, outlining the areas of agreement between forensic experts and scientists, levelled particular criticism at London Regional Transport.

In referring to the "water fog system" at the station, which was not used at the time, he said: "The consensus believes it would or might have been adequate to extinguish the fire." It would probably have prevented the deadly flash-over.

The possibility of an electrical fault could never be completely excluded "because of the poor quality of maintenance of electrical machinery in that area."

He said that the fire in number four escalator linking the Piccadilly Line with the ticket hall on Nov 18 last year could perhaps never be fully explained because of its magnitude.

However, although deliberate dropping of lighted material could not be ruled out, no accelerants had been found, and there was no evidence of deliberate fire raising. Nor had the cleaning fluid used or stored nearby played any part in fuelling the blaze.

"It is probable that it ignited just below halfway up the escalator in an accumulation of grease, fluff and debris, resulting most probably from a lighted match dropping between the skirting board on the right-hand wheel trap of the treads."

Substantial quantities of debris, including grease 30mm deep and 170mm wide, had been found six inches below the skirting board. Discarded matches and cigarette ends had been found elsewhere in the escalator.

Controlled tests on a lower section of the same escalator carried out on Jan 8 had shown that a lighted match would ignite the material, where three burning cigarette ends failed to do so. Charring from similar incidents had been found elsewhere on the escalator and on the one adjoining.

But, such a theory was "plainly not the view of all the experts," Mr Henderson told Mr Desmond Fennell QC, head of the inquiry, at Church House, Westminster.

There was the possibility that it could have been caused by a cigarette, that the match could have been ignited by a moving part of the escalator or that such friction could itself have caused a spark.

Once the fire began, he said, the water fog system could have helped, but the degree would depend on where a sprinkler outlet was positioned and how quickly it was turned on.

The fire spread from the wheel track to the skirting board and on to the balustrade and treads and rises, before igniting the wall panelling and ceiling. It also spread through the decking to escalator number 5.

Experts disagreed on what caused the flash-over into the ticket hall. Some thought the paint on the ceiling was "in itself or when it became de-laminated" a major contributing factor.

Others investigating the cause of the horrifying spread of flames concluded it had been fuelled by the "piston effect" of the trains in the tunnels, whether they stopped or not. Another expert believed simply that the fire followed traditional patterns of those experienced in mines.

"There is a theory by the Health and Safety Executive of a clockwise vortex of flames and heat, which had the effect that, although the ceiling was badly damaged, it did not burn the recessed light fittings."

Mr Henderson said there was also dispute about an assertion from the London Fire Brigade that there was "an accumulation of inflammable substances in the ticket hall."

Because of the varying theories, further tests would have to be conducted.

The flash-over, however, was probably caused "by paint on the ceiling of the shaft being heated to a high temperature, especially by wood in the escalator shaft and by wall panels, such that it ignited and de-laminated," and either by movement of trains or normal combustion there was a sudden outburst from the shaft to the ticket hall.

This view was supported by much evidence, including on report which suggested ther were anomalies in the applic tion of the paint, P2 Prodorite.

Other issues which had st not been resolved would be th subject of further investigatio These included whether th false ceiling had any bearing c the scale of injuries and fatal ties; what paint had been usc on the hoardings present in th ticket hall, and whether th flooring in the ticket hall ha acted as fuel for the fire.

Mr Fennell adjourned th hearing until next Monday Central Hall, Westminste where they would begin hearin evidence from survivors. Som statements would be read, a the victims were still too ill t attend the inquiry.

Investigators are still tryin to identify one of those killed i the fire, a white man age around 50, 5ft 2in tall, an showing signs of having had

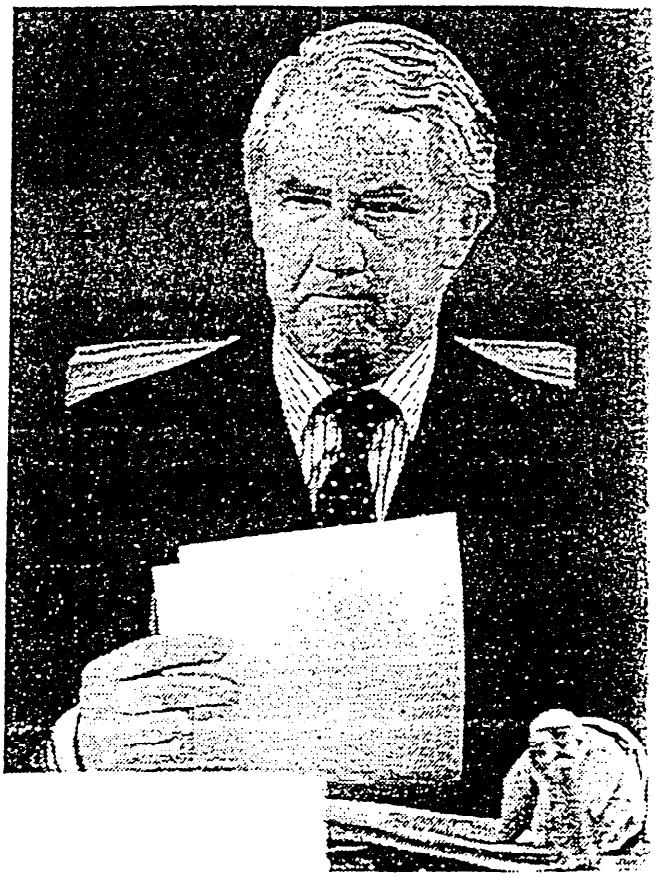

Mr Desmond Fennell QC, head of the inquiry

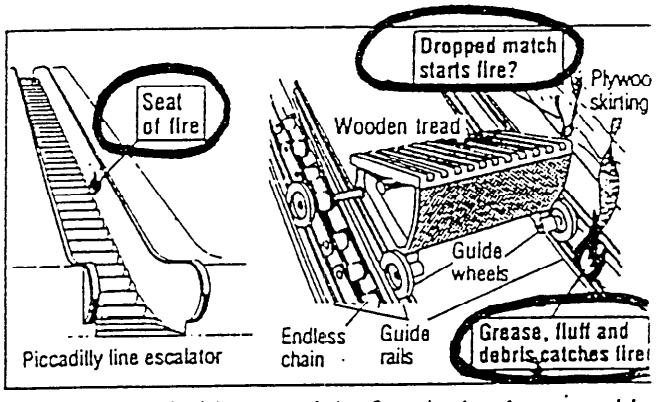

A match probably started the fire, the inquiry was told

Montgomery KONE

E-SERIES 5000 ®

FEATURES

A blend of elegance and symmetry, the E-SERIES 5000 escalator is more than what meets the eye. In addition to a beautiful exterior, improved passenger safety was a main driving force behind the development of the E-SERIES 5000. The result of this attention is an escalator that surpasses the Escalator Code safety requirements for the protection of the riding public. Montgomery KONE Inc. is proud of all the advancements that we have made in the E-SERIES 5000.

An explanation of the features and details of the E-SERIES 5000 is found on the following pages:

➢ **Step to Skirt Clearance:**

The E-SERIES 5000 is designed to reduce the step to skirt clearance through a patented step guidance system. This system positions each step between the skirt panels by using rollers, mounted on each end of the step axle, to ride on a track mounted below the skirt and to guide the steps down the incline independent of the chain. This arrangement positions each step between the rigidly mounted skirt panels and guides them along their path. Side to side movement of the step is controlled and a nominal clearance of less than 1/16" between the step and skirt is maintained.

➢ **Skirt Stiffness:**

The skirt panels on the E-SERIES 5000 have been stiffened with horizontal channels and mounted rigidly to the escalator truss. This, reduces skirt deflection and the resulting gap between the skirt and step caused by the force of an object pushing against the skirt.

➢ **Step Combing:**

Reducing the possibility of objects becoming caught between the step and combplate is the main purpose of the escalator comb segments. The comb segments have fingers that mesh with the grooves on the surface of each step help o sweep out objects in the groove. Montgomery KONE has modified the design of the Estaloc® comb segment by refining the profile of the comb teeth. Objects in the step grooves are more apt to be swept out of the step groove by the combing action of the redesigned Estaloc® comb segments.

Escalator safety is important to everyone. That's why we designed the E-Series 5000 with significantly improved safety features.

A unique blend of elegance and safety, the E-Series 5000 was designed with concern for not only how it will add to the aesthetics of your building, but also for the safety of your customers as well. The E-Series 5000 escalator was designed from our "customers' perspectives" with the intention of making it an elegant addition to any building while also exceeding ASME code requirements. The result is a rare combination of design and performance that is sure to please the most discriminating Design Professional and Building Owner. The following pages detail innovative features of this new product and prove that elegance and safety can co-exist within the same beautiful and clean lines of the E-Series 5000.

New patented step guidance system reduces the clearance between the steps and the skirt panels to a nominal 1/16". This far exceeds the minimum ASME code requirement of 3/16" on each side of the step. Steps are laterally controlled to prevent side to side movement.

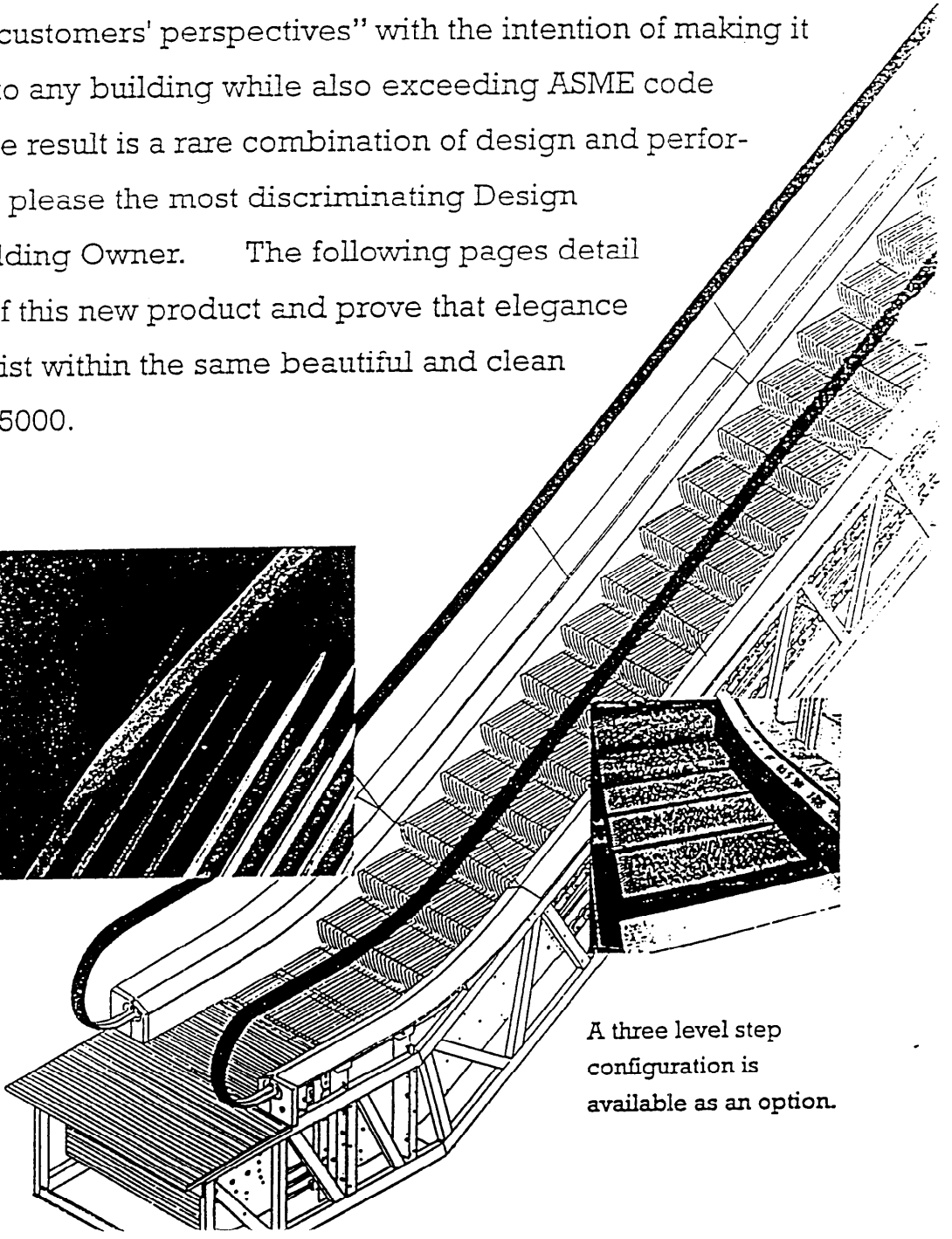

A three level step configuration is available as an option.

STEP SAFETY SIDEPLATES™ / CANOPY GUARD AND LATERAL STEP GUIDANCE DEVICE.

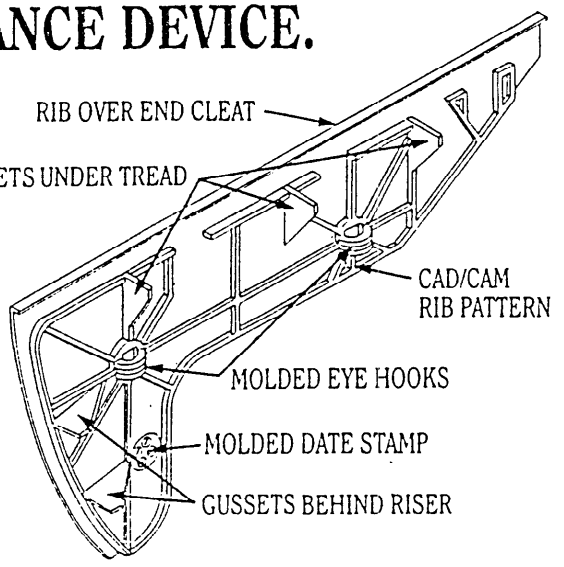

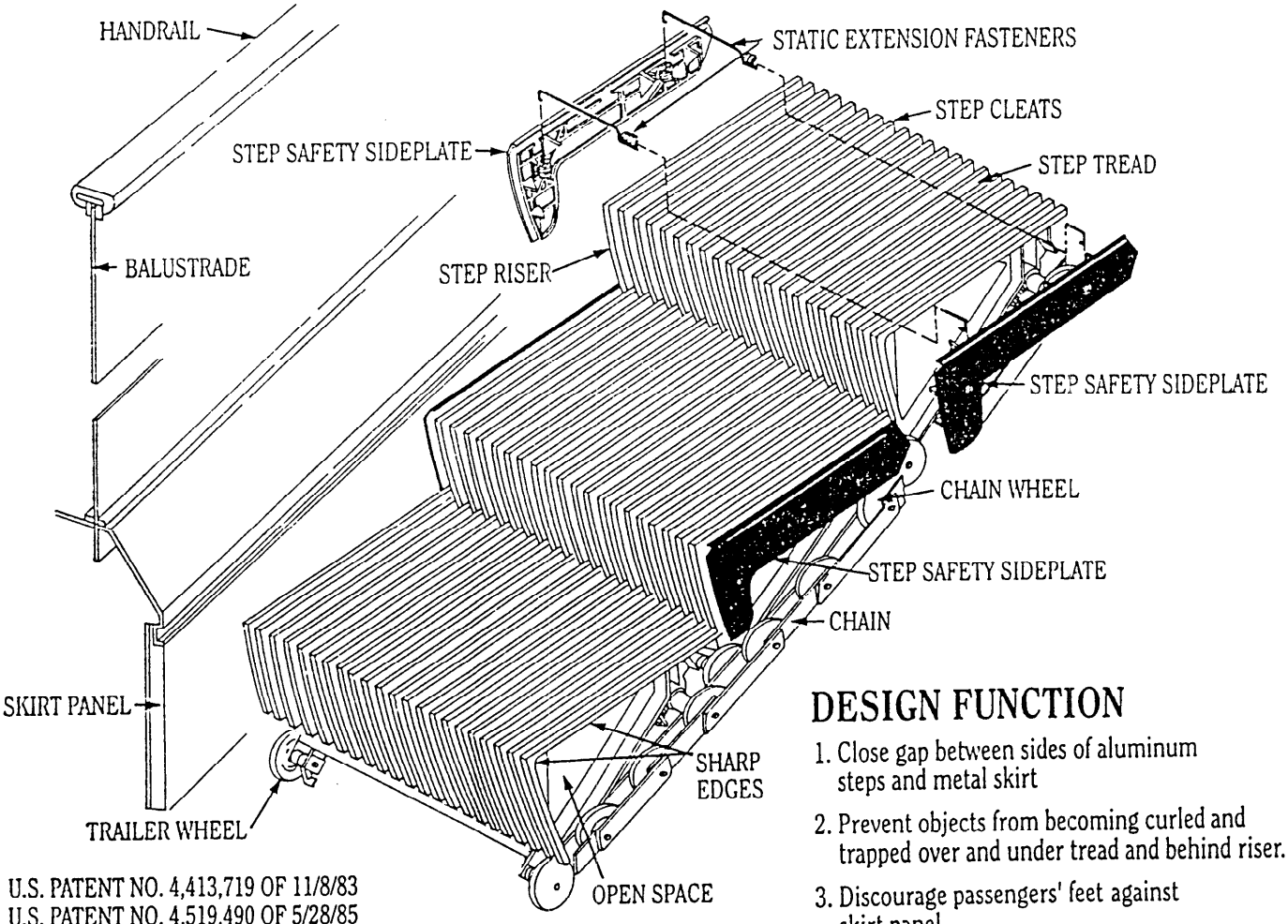

U.S. PATENT NO. 4,413,719 OF 11/8/83
U.S. PATENT NO. 4,519,490 OF 5/28/85
CANADIAN PATENT NO. 1,187,441 OF 5/12/85
ITALIAN PATENT NO. 1,159,267 OF 2/25/87
EUROPEAN PATENT NO. 0079957 OF 1/27/88

COPYRIGHT 1990 CARL J. WHITE & ASSOCIATES, INC.

DESIGN FUNCTION

1. Close gap between sides of aluminum steps and metal skirt
2. Prevent objects from becoming curled and trapped over and under tread and behind riser.
3. Discourage passengers' feet against skirt panel
4. Barrier from inflammable objects and dirt entering escalator
5. Lateral step, wheels, and chain guidance.

STEP SAFETY SIDEPLATES™ / CANOPY GUARD AND LATERAL STEP GUIDANCE DEVICE.

Technical Description.

Each STEP SAFETY SIDEPLATE™ contains an internal lubricant so that contact between the moving step and skirt panel has no effect on the efficiency of the escalator drive. They have a dynamic coefficient of friction of 0.15 against steel measured by the ASTM D 1894 test method and are unaffected by a wide range of acids, oils, greases and solvents. They also have a UL fire rating of HB-94, better than the step wheels and handrail materials.

Each type of escalator step has an individually designed STEP SAFETY SIDEPLATE™ and separate tooling. The parts are single cavity injection molded in a 300-ton machine. Each part is hand clamped in a specially made fixture to create a desired bend while curing. The injection sprue is hand cut and drilled flush.

Each piece has an injection molded date stamp for quality assurance purposes. Both design tolerances and fit to the steps are checked throughout the manufacturing process.

The reinforcement rib pattern was CAD/CAM designed for rigidity and impact resistance. The boomerang shape is for ease of step handling.

There are three different lengths of sideplate attachment fasteners for 24"(600mm),32"(800mm)and 40"(1000mm) nominal width steps. Each is computer designed and made of certified ASTM A-227 pre-galvanized hard drawn carbon steel spring wire and stress relieved to 500-degrees F (260 C).

Ribs over and under the tread and behind the STEP SAFETY SIDEPLATE™ riser mechanically locks the sideplates into the hollow nest of the step. The spring fasteners provide lateral tension to hold the plates against the step and to prevent over/under tightening.

Specifications.

The steps shall be provided with high strength, internally lubricated, black copolymer STEP SAFETY SIDEPLATE™ guards securely attached to each side of the metal steps which shall extend not less than 3"(76.2mm) inches below the sides of the step tread and behind the riser. Adjacent skirt panels shall be adjusted plumb with a maximum running clearance gap of not more than 1/16" (.0625mm) at any point between the STEP SAFETY SIDEPLATES™ and skirt panels to reduce the possibility of objects becoming entrapped and their being curled over the sides of the step. The STEP SAFETY SIDEPLATES™ shall be as manufactured by Carl J. White & Associates, Inc.

Carl J. White & Associates, Inc.
Elevator & Escalator Consultants
P.O. Box 60340 / Colorado Springs,Colorado / 80960-0340

For a copy of THE ESCALATOR SIDEPLATE™ STORY VCR and further information about this major escalator safety development please contact your escalator maintenance contractor or call 1-800-626-3555 in both the U.S. and Canada.

§10.26A ANSI Standard for Product Safety Signs and Labels

ANSI Standard Z535.4 Product Safety Signs and Labels (June 1991) sets forth a hazard communication system developed specifically for product safety signs and labels. Requirements for signs and labels used with hazardous chemicals, as defined in ANSI Z129.1 (1982), are not included in the scope of the standard. Product safety signs and labels are classified according to the relative seriousness of the hazard situation. The determination is based on an estimation of the likelihood of exposure to the hazardous situation and what could happen as a result of exposure to the hazard.

For products, there are three hazard classifications which are denoted by the signal words DANGER, WARNING, and CAUTION. DANGER indicates an imminently hazardous situation which, if not avoided, will result in death or serious injury. This signal word is to be limited to the most extreme situations. WARNING indicates a potentially hazardous situation which, if not avoided, could result in death or serious injury. CAUTION indicates a potentially hazardous situation which, if not avoided, may result in minor or moderate injury. It may also be used to alert against unsafe practices.

A product sign or label consists of a signal word panel plus a message panel. The signal word panel is the area of the safety sign containing the signal word. The message panel is that area of the safety sign containing the messages which identify the hazard, indicate how to avoid the hazard, and advise of the probable consequences of not avoiding the hazard. A pictorial panel may be used to communicate part, or all, of the elements of a message panel. A *pictorial* is a graphic representation intended to convey a message without the use of words. It may represent a hazard, a hazardous situation, a precaution to avoid a hazard, a result of not avoiding a hazard, or any combination of these messages. The latest draft of the standard notes that when a symbol/pictorial is used to convey any of the messages, the message(s) conveyed by the symbol/pictorial are not required to be repeated in word form in the message panel.