United States
CONSUMER PRODUCT SAFETY COMMISSION
Washington, D.C. 20207

CPSA 6 (b)(1) Cleared
7/22/97
___No Mfrs/PrvtLblrs or
Products Identified
X Excepted by Pet Prob
___Firms Notified,
Comments Processed.

MEMORANDUM

DATE: July 21, 1997

TO : Distribution

Through: Sadye E. Dunn, Secretary

FROM : Martha Kosh
Office of the Secretary

SUBJECT: Petition Requesting Development of Safety Standards for Escalators, FR., Vol 62, No. 99, May 22, 1997

ATTACHED ARE COMMENTS ON THE CA97-2

COMMENT	DATE	SIGNED BY	AFFILIATION
CA97-2-1	5/08/97	Josephine Brown	300 Church Street Vine Grove, KY 40175
CA97-2-2	6/02/97	Carl J. White President	Carl J. White & Associates, Inc. Airport Industrial Park 5755-A Industrial Place Colorado Springs, CO 80916
CA97-2-2a	6/03/97	Carl J. White	Address same as above
CA97-2-2b	7/18/97	Carl J. White	Address same as above
CA97-2-3	6/11/97	D.A. Swerrie President	Swerrie, Inc. 244 San Felipe Way Novato, CA 94945
CA97-2-4	6/17/97	G. Burdeshaw Secretary, A17 Committee	ASME International 345 East 47th Street New York, NY 10017
CA97-2-5	7/1/97	Carol Minor Director	Westminster United Methodist Church 5801 San Felipe Houston, TX 77057

Petition Requesting Development of Safety Standards for Escalators, FR., Vol 62, No. 99, May 22, 1997

CA97-2-6	6/20/97	Richard Kuchnicki Chief Executive Officer	Council of American Building Officials 5203 Leesburg Pike Falls Church, VA 22041
CA97-2-7	7/15/97	Robert Seymour President	Robert L. Seymour & Associates, Incorporated Vertical Transportation Consultants P.O. Box 948 Bowie, MD 20718
CA97-2-8	7/15/97	Z.R. McCain	McCain Engineering Associates, Incorporated 2207 Creighton Drive Norman, OK 73071
CA97-2-9	7/18/97	Gerard Lederer, Esq CAE, Vice President Government and Industry Affairs	Boma International 1201 New York Ave, NW Suite 30 Wasington, DC 20005
CA97-2-10	7/18/97	Robert Hannemann President	American Academy of Pediatrics 601 13th Street, NW Suite 400 North Washington, DC 20005
CA97-2-11	7/15/97	Russell Ohman President	NAESA International Executive offices 4541 N 12th Street Phoenix, AZ 85014
CA97-2-12	7/17/97	James Bolch Vice President Maintenance Operations	Otis Elevator Company North American Operations 212 West Newberry Road Bloomfield, CT 06002
CA97-2-13	7/18/97	Heimo Makinen President and CEO	Montgomery Kone, Inc. One Montgomery Court Moline, IL 61265
CA97-2-14	7/18/97	William Millar President	American Public Transit Association 1201 New York Ave, NW Washington, DC 20005
CA97-2-15	7/20/97	Hubert H. Hayes President	Hubert H. Hayes, Inc. Elevator Consultants 1713/19 Ralph Ave, 2nd Fl Brooklyn, NY 11236

Petition Requesting Development of Safety Standards for Escalators, FR., Vol 62, No. 99, May 22, 1997

CA97-2-16	7/20/97	Hubert Hayes	National Association of Vertical Transportation Professionals 1713-19 Ralph Avenue Brooklyn, NY 11236
CA97-2-17	7/21/97	James Cocca President	Schindler Elevator Corp. 20 Whippany Road Morristown, NJ 07962
CA97-2-18	7/21/97	E. James Walker Executive Director (NEII) & Kathleen Sanzo, Esq Counsel for NEII Morgan, Lewis & Bockius LLP	National Elevator Industry, Inc. Association Headquarters 185 Bridge Plaza North Room 310 Fort Lee, NJ 07024
CA97-2-19	7/21/97	Richard Zipperer Policy Analyst	Consumer Alert 1001 Connecticut Ave, NW Suite 1128 Washington, DC 20036
CA97-2-20	7/15/97	James W. Coaker, PE	James W. Coaker, PE 11675 Captain Rhett Lane Fairfax Station, VA 22039
CA97-2-21	7/16/97	Claire Adamson	1812 Baile CANADA H3H 1p4

Distribution:
Commission
EXHR
ES
OGC

Ack card sent 5/8/97 Tde

CPSC/OFC OF THE SECRETARY
FREEDOM OF INFORMATION
97 APR 29 A 10:29

22APR97
MRS. J. BROWN
300 CHURCH ST.
VINE GROVE, KY 40175

GENTLEMEN:

THIS IS WITH REFERENCE TO THE NUMBER OF FREAK ACCIDENTS THAT HAVE OCCURRED ON ESCALATORS THAT DO NOT HAVE A SIDE PLATE THAT SUCCESSFULLY PREVENTS ACCIDENTS THAT MIGHT HAPPEN WHEN A PERSON'S FOOT IS TRAPPED BETWEEN THE STEP AND THE SIDE WALL OF AN ESCALATOR.

I HIGHLY RECOMMEND THAT THESE SIDE PLATES SHOULD BE MANDATORY ON ALL ESCALATORS.

THANK YOU,

Josephine Brown

JOSEPHINE BROWN

Carl J. White & Associates, Inc.

ELEVATOR & ESCALATOR CONSULTANTS

AIRPORT INDUSTRIAL PARK

5755-A INDUSTRIAL PLACE COLORADO SPRINGS, CO 80916-1797

(719) 550-0660 FAX (719) 550-0978

June 2, 1997

Mr. Nick Marchica
Director, E.S.M.E.
U.S. CONSUMER PRODUCT SAFETY COMMISSION
ESME, Room 611-20
4330 East West Highway
Bethesda, Maryland 20814

RE: OS No. 3523 CP 97-1
Petition of Scott & Diana Anderson
Date April 9, 1997

Dear Mr. Marchica:

For your consideration, we would like to respond to the subject petition and comment as follows:

1. Attached is a copy of a letter from your General Counsel to Kenneth Ross, Esq., of Westinghouse Electric Corporation dated February 27, 1978 wherein Westinghouse Elevator Company, through its Westinghouse Electric Corporation parent, was officially advised that "elevators and escalators are consumer products within the jurisdiction of the Commission."

2. We are of the opinion that since early 1978 not only Westinghouse Elevator Company, but the elevator and escalator industry, through Westinghouse's membership and participation in the National Elevator Industry, Inc. (NEII) has been aware that elevators and escalators are a consumer product and therefore subject to the accident reporting requirements of the C.P.S.C.

3. Escalators are classified as a Common Carrier by law in approximately 40 states. Common Carrier status legally requires "utmost care" or the "highest degree of care" vs. "great care", "ordinary care" or "reasonable care." This highest degree of care applies to the design, manufacturing, installation and maintenance of a product for the transportation of passengers (consumers).

4. It is not a Building Code requirement anywhere that escalators be installed in a building and it was only since the advent of the Americans with Disabilities Act (ADA) that elevators became a building code requirement with the exception of some few local building codes such as Tampa, Florida and the State of Florida as examples.

   Both elevators and escalators were long considered chattel with retained title rights by the contractor protected under the Uniform Commercial Code (UCC).

   Building codes do not permit escalators to be considered as a means of egress in the event of fire or substitute for stationary stairway requirements.

RE: OS No. 3523 CP97-1
Petition of Scott & Diana Anderson
Dated April 9, 1997

5. Escalators are not an integral part of a building's real property because they are commonly removed from buildings such as department stores converted to office buildings. In addition, escalators are often removed and reinstalled in the same building or in other buildings such as in airports and others. There is a company which specializes in buying escalators, removing, reconditioning, bringing them up to current codes, reselling and reinstalling them.

6. Not all escalators are assembled on the job site which is only required by signatories to the International Union of Elevator Constructors (I.U.E.C.) contract. Non-union contractors have long installed factory pre-assembled escalators as is the standard procedure outside of the United States and Canada. One manufacturer in the U.S. has a contract with a national department store chain to totally preassemble, factory run and test then one-piece ship their escalators which are hoisted in place at destination, electrically connected and running within 2 -3 days upon arrival at a building.

7. Escalators are a commonplace product not only found in commercial establishments, but also in public buildings such as schools, libraries, courthouses, national monuments and other buildings as well as tax supported facilities such as public transportation and airports as well as amusement parks such as Disneyland, Disney World and others, re. CPSC vs. Chance Manufacturing Co., Inc., et al. No. 77-4581 (D.C.C. 1977) cited in your February 27, 1978 response letter to Westinghouse.

8. There can be no question that escalators exist solely and exclusively for the enjoyment of consumers/passengers to effortlessly & conveniently without waiting transport them from one floor or level to another. Please see ANSI/ASME prescribed sign stating "Passengers Only" attached.

Time permitting, I hope to submit further matters for your consideration in processing the subject petition in addition to my numerous previous submittals. A copy of my resume outlining my 40 years of continuous activities in the elevator and escalator industry is attached.

Best regards,

CARL J. WHITE & ASSOCIATES, INC.

Carl J. White
President

CJW:dw
Enclosures

Library

U.S. CONSUMER PRODUCT SAFETY COMMISSION

WASHINGTON, D.C. 20207

February 27, 1978

Kenneth Ross, Esquire
Westinghouse Electric Corporation
Westinghouse Building
Gateway Center
Pittsburgh, Pennsylvania 15222

Dear Mr. Ross: Ken

This is in response to your letter of December 21, 1977 in which you request a copy of the opinion in Consumer Product Safety Commission v. Chance Manufacturing Co., Inc., et al., No. 77-4581 (D.D.C. 1977) and an interpretation of that decision as it applies to elevators and escalators. You also ask whether elevators and escalators are consumer products within the jurisdiction of the Commission. A copy of the Court's opinion is enclosed.

As you know, the Court in Chance found that an amusement park ride known as the Zipper is a "consumer product" as that term is defined in the Consumer Product Safety Act (CPSA) (15 U.S.C. 2051 et seq.) and thus subject to the Commission's jurisdiction. The Court based it's decision on the fact that the amusement ride is produced for the personal use, consumption or enjoyment of consumers and that the product is used in recreation. Thus, the Court found the jurisdictional requirements of the CPSA were met. In dicta, the Court expressed the view that its holding would not be authority for the Commission to assert jurisdiction over other forms of conveyances such as elevators, subways or trains.

It is the view of the Office of the General Counsel, however, that an elevator or escalator used or enjoyed by consumers, in a public building, for example, is a consumer product subject to the Commission's jurisdiction under the CPSA.

ADVISORY OPINION

262

The term consumer product is defined in section 3(a)(1) of the CPSA, in relevant part, as any article produced or distributed for sale to or personal use, consumption or enjoyment of a consumer in or around a "household or residence, a school, in recreation, or otherwise." Excluded from the Commission's jurisdiction is any article which is not customarily produced or distributed for sale to, or use or consumption by or enjoyment of a consumer. 15 U.S.C. 2052 (a)(1)(A).

The Court in Chance indicated it would apply the term "or otherwise" narrowly in determining whether the context in which a product is used qualifies it to be a consumer product. The Court also indicated that a broad reading of that term is not supported by the legislative history of the CPSA. We disagree with this view. In fact, the scope of the term "or otherwise" and the applicability of the Act to elevators and escalators was not fully addressed by the Court. If it had been fully considered, we are certain the Court would have found jurisdiction.

We believe the plain words of the statute do not limit consumer products to items consumers use, consume or enjoy in or around homes, in schools or in recreation. In addition, the legislative history of the CPSA makes clear that Congress enacted the law to reduce the exposure of consumers to unreasonable risks of injury from commonplace products. Congress intended the definition of the term "consumer product" to be construed in a broad and comprehensive manner. The term "or otherwise" does not, in our view, qualify the words in or around a "residence, a school, in recreation" but rather is independent. Congress' overriding concern in enacting the CPSA was to provide one agency with jurisdiction over products which could expose consumers to unreasonable risks of injury, regardless of where that exposure occurred. The language of the CPSA is in contrast to that of the Federal Hazardous Substances Act (15 U.S.C. 1261 et seq.), which the Commission also administers, where Congress specifically limited jurisdiction to hazardous substances "intended, or packaged in a form suitable, for use in the household." 15 U.S.C. 1261 (q)(1)(B). In view of the foregoing, the Office of the General Counsel believes that the Commission has jurisdiction over elevators and escalators used by consumers. This opinion is consistent with an earlier Advisory Opinion of this Office, number 182 concerning elevators.

Please do not hesitate to contact me if I can be of further assistance.

Sincerely,

Theodore J. Garrish
General Counsel

Enclosure

Fig. D2

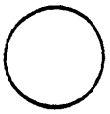

White

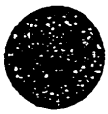

Black

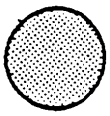

Yellow Per ANSI Z35.1

FIG. D2 ESCALATOR CAUTION SIGN

Carl J. White & Associates, Inc.

ELEVATOR & ESCALATOR CONSULTANTS

AIRPORT INDUSTRIAL PARK

5755-A INDUSTRIAL PLACE COLORADO SPRINGS, CO 80916-1797

(719) 550-0660 FAX (719) 550-0978

June 3, 1997

Mr. Nick Marchica
Director, E.S.M.E.
U.S. CONSUMER PRODUCT SAFETY COMMISSION
ESME, Room 611-20
4330 East West Highway
Bethesda, Maryland 20814

RE: OS No. 3523 CP 97-1
Petition of Scott & Diana Anderson
Date April 9, 1997

Dear Mr. Marchica:

Following is a copy of the Schindler Elevator Corporation "SureGuide™ Escalator Step Guidance System" brochure along with our June 2, 1997 Draft Memorandum on this system compared to our STEP SAFETY SIDEPLATE™ retrofit.

Please consider this information in processing the subject petition.

Best regards,

CARL J. WHITE & ASSOCIATES, INC.

Carl J. White
President

CJW:dw

Enclosure

Schindler SureGuide™

Escalator Step Guidance System

Minimize Side Skirt Clearance

To enhance passenger safety, Schindler has developed the SureGuide™ escalator step guidance system as an upgrade for most Westinghouse Moduline® escalators.

When installed on each escalator step, the SureGuide system allows the skirt to be adjusted to a closer tolerance, minimizing the step-to-skirt gap. The SureGuide system reduces this critical space, and keeps it more consistent for the full rise of the escalator. Lateral play resulting from normal usage is also minimized.

An Invisible Solution

Because Schindler SureGuides are made of a self-lubricating, high-performance engineering polymer, they maintain a low friction coefficient at the contact point with the skirt. As a result, ride quality remains consistent, and minimal mechanical stress is transferred to other system components.

The SureGuide system functions invisibly, below the surface of the escalator step. The visible surface of your escalator skirt is never in contact with the guides. Therefore, Schindler SureGuides preserve your escalator's stylish appearance while promoting greater comfort and safety for your passengers.

Proven Technology, Rapid Installation

Once again, Schindler has applied its global engineering expertise to upgrade existing Westinghouse systems. SureGuide uses proven technology and is a standard feature on our newest escalator lines.

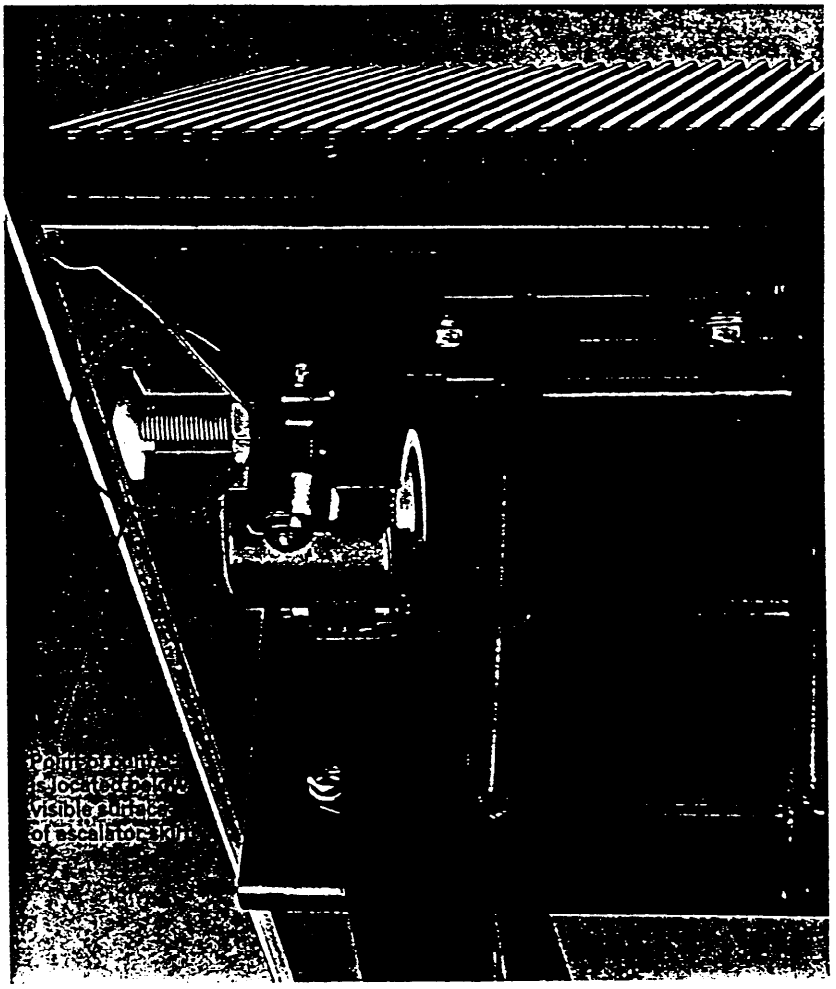

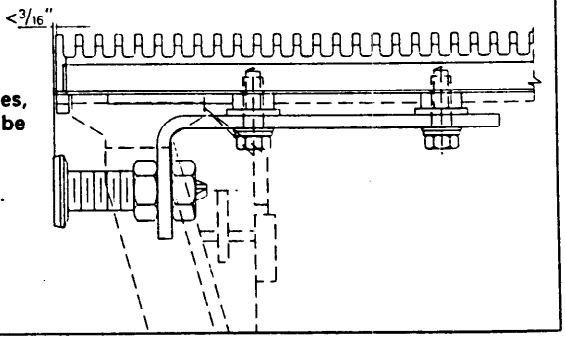

With Schindler SureGuides, the step-to-skirt gap can be maintained at tighter clearance than the 1996 code requirement of 3/16".

Schindler Q

The Schindler SureGuide System

Select Your Own SureGuide Installation Option

Schindler offers three installation alternatives to fit your specific budget and requirements.

1. New, Factory-Built Steps
   Schindler can install brand new, factory-built escalator steps, with the SureGuide system included as a standard feature. During installation, the step-to-skirt clearance is adjusted to minimize the gap. Fast installation minimizes disruption of normal service.
2. Reconditioned, "Like-New" Steps
   Schindler also offers reconditioned, "like-new" escalator steps, with optional demarcation strips. The reconditioning process includes:
   - Restoration of step treads to meet most codes.
   - Cleaning and refinishing of step treads and risers to restore original appearance.
   - Replacement of rollers on all rebuilt steps.
   - Attachment of SureGuides.

   The skirts are adjusted to minimize step-to-skirt clearance. Fast installation minimizes disruption of normal service.
3. Your Existing Steps
   If you prefer, Schindler SureGuides can be installed on your existing escalator steps and the step-to-skirt clearance can be minimized.

For more information, consult your Schindler representative.

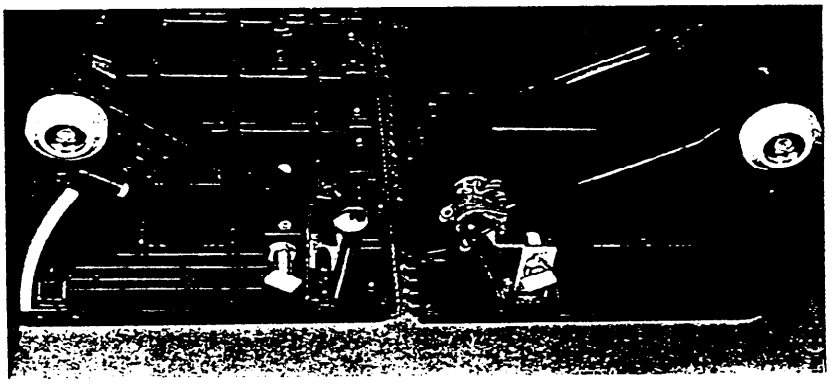

The SureGuide system can be fitted to both B and B1 Moduline® escalator steps.

Schindler

The Elevator and Escalator Company

U.S. Headquarters
Schindler Elevator Corporation
20 Whippany Road, P.O. Box 1935
Morristown, New Jersey 07962-1935
(201) 397-6500
After 6/1/97: 973-397-6500

Canada Headquarters
Schindler Elevator Corporation
40 Cowdray Court
Scarborough, Ontario M1S 1A1
(416) 332-8280

Visit Our Web Site: www.us.schindler.com

© Schindler Elevator Corporation 1997

C710

AS-6013

K	Schlieren Schweizerische Wagons- und Aufzügefabrik AG Schlieren-Zürich CH-8952 Schlieren	Ersatzteil-Katalog 11.60-03	Änd.-Index
Gruppe	Kompaktstufe mit Zubehör Marche monobloc et accessoires Compact step with accessories SW	Ersatz für: Erstellt 7619 Holy; Visiert 7619 /sW	Seite ..... Seiten

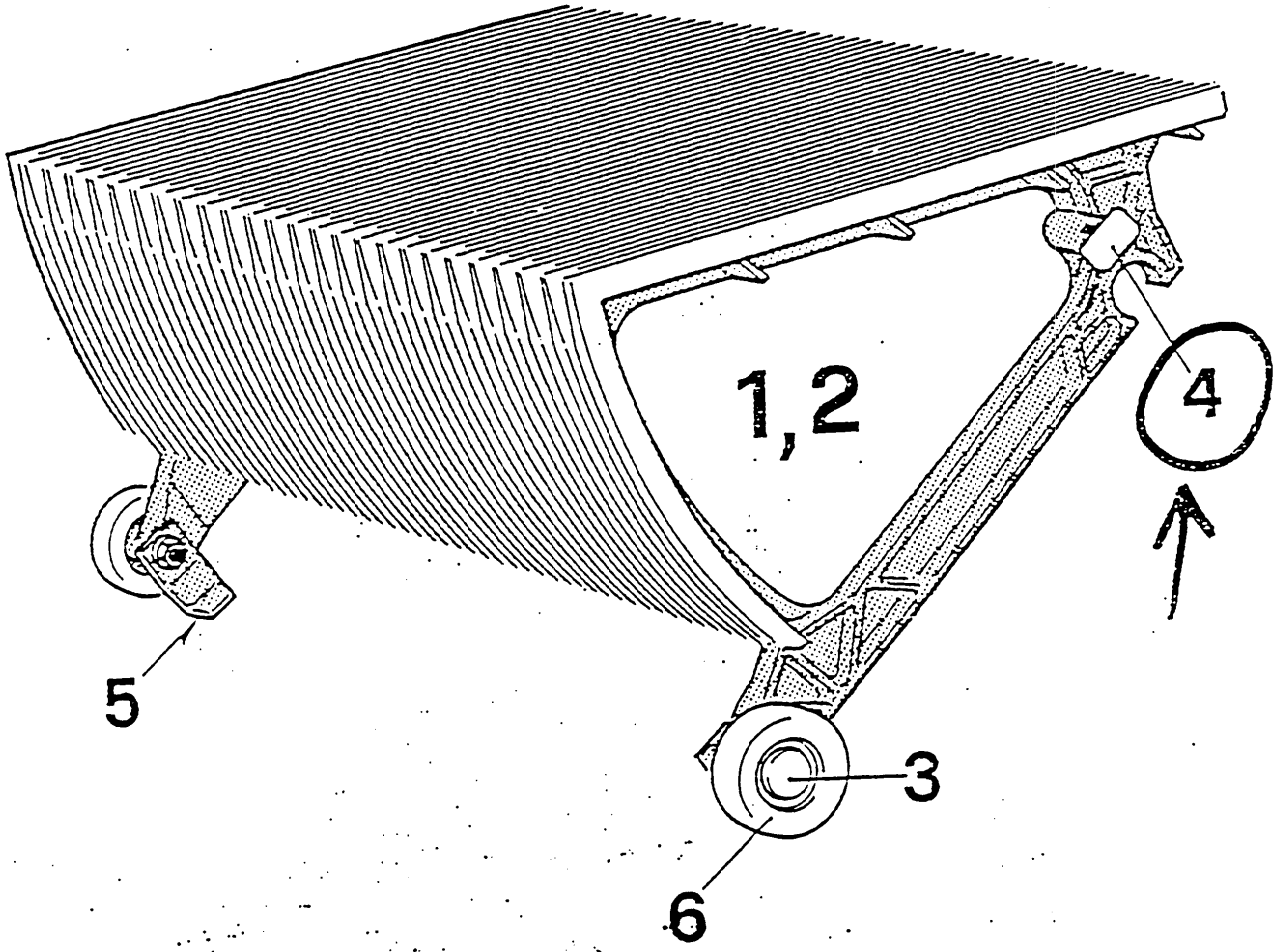

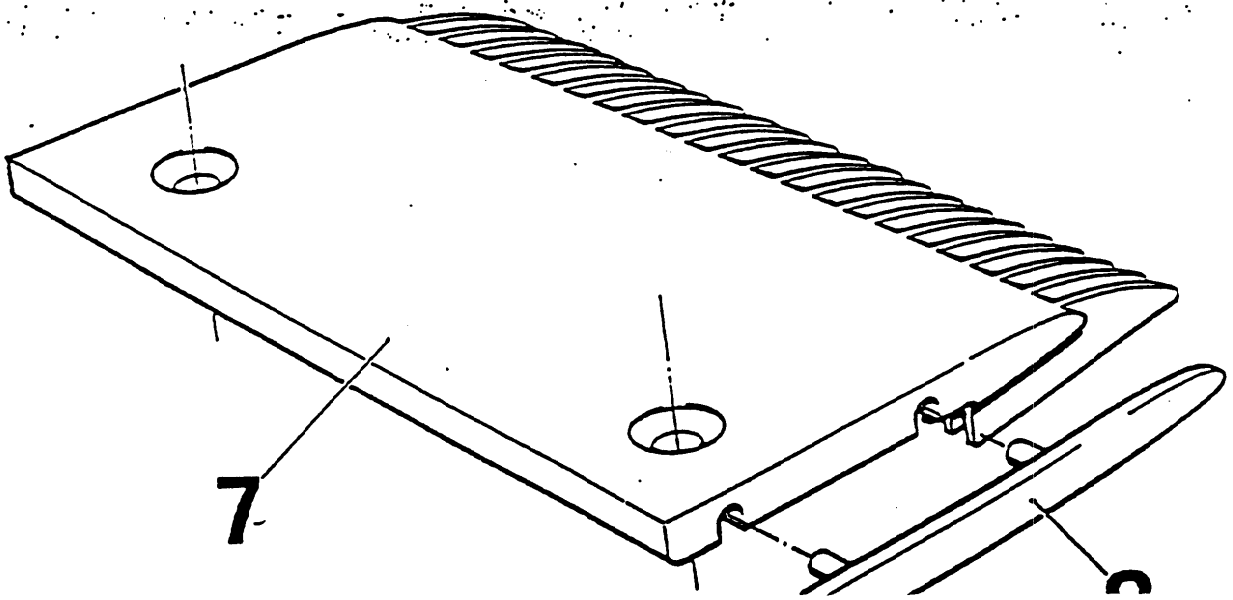

Metro Escalator Steps In Need of Costly Lift

Rash of Failures Prompts Systemwide Check

By Stephen C. Fehr
Washington Post Staff Writer

Steps are breaking on the 460 escalators at Metro rail stations with increasing frequency, requiring costly repairs and inconveniencing riders, officials said yesterday.

During the next 10 days, escalators will be out of service at various times as a contractor inspects all 66,000 steps to determine the extent of the problem. Officials will try to keep the longest escalators open during rush hour.

Step failures have occurred occasionally during the rail system's 15 years, but since December a rash of escalator problems has hit seven stations. The most recent breakdowns occurred Friday and Saturday at the Rhode Island Avenue and Dupont Circle stations on the Red Line in the District.

The other stations affected were Foggy Bottom and McPherson Square on the Blue and Orange lines, and Union Station, Woodley Park-Zoo and Bethesda on the Red Line.

No one was injured in the incidents. Transit officials said the failures are not necessarily a threat to riders, although there is the potential for injury if they fall as a result of abrupt stops.

The problem has occurred mostly with the uncovered cast-aluminum steps outside older stations. The steps get out of alignment, and the teeth at the edge of a step can catch as it goes under the plates at the top or bottom of the escalator. The step then fractures and can buckle the steps behind it, abruptly halting the escalator.

In addition to being almost 15 years old, the steps at many stations are exposed to the weather, and chemicals used to melt snow and ice. Vandals sometimes abuse the steps. A few weeks ago, two beer kegs were placed on the Dupont Circle escalator, cracking the steps. The constant shock from riders running down the steps also creates cracks, officials said.

"No system is designed to take that kind of abuse," said Fady P. Bassily, Metro's rail manager, adding that other rail systems have the same problem with some of their escalators. Asked whether riders can be injured, Bassily said: "The possibility of that happening is very, very remote."

Replacing steps is costing Metro more money every year, and is one of the reasons for the agency's current financial troubles. In the fiscal year that ends in July, Metro budgeted $300,000 to replace steps, but will need another $531,000 by July. The 1992 budget includes an increase from $8.1 million to $9.9 million for escalator maintenance, primarily because of the need to replace 2,080 steps. Each step replacement costs $214.

Metro is spending another $420,000 to install automatic switches on the escalators that will stop them before the steps can bunch up when one breaks, Bassily said.

The step failures are part of a broader, persistent problem with Metro escalators.

In the rail system's 15 years, 1,800 persons have been injured, two fatally, on escalators. Most of the accidents were caused by riders who fell, tripped, failed to hold the handrail or were pushed. Fourteen percent of the accidents were caused by mechanical failure, usually by sudden stops of the steps or handrail, according to a 1989 report.

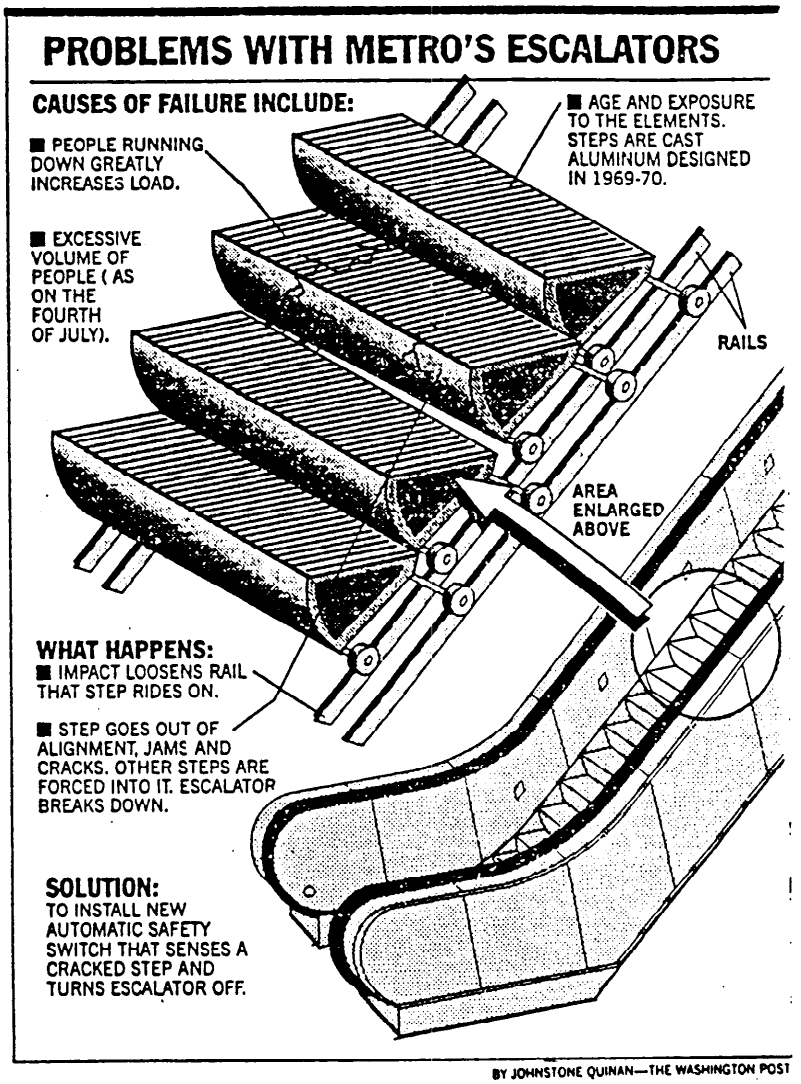

BY JOHNSTONE QUINAN—THE WASHINGTON POST

The escalators were installed and built by Westinghouse Elevator Co., which was purchased in 1989 by the Schindler Corp. of Switzerland. Metro awarded Schindler a $23.1 million contract in 1989 to maintain its escalators. That contract has been challenged in U.S. District Court here by Elcon Enterprises Inc., an Upper Marlboro company that said its bid was $5 million lower than Westinghouse's.

After a meeting yesterday between Schindler and Metro officials, the company was told to complete its check of the escalators within 10 days. Metro officials will then develop an escalator overhaul proposal for Metro's board of directors. Schindler also agreed to improve its maintenance of the escalators, and Metro said it would check on the company more often.

Although the cost of any overhaul will be covered under Schindler's current maintenance contract, officials said, the cost of repairing the system is rising. The increase contributed to Metro's unexpectedly high costs this year, part of the reason the transit agency is proposing a fare increase averaging 18 percent.

Judy Mann is away. Her column will resume when she returns.

Carl J. White & Associates, Inc.

ELEVATOR & ESCALATOR CONSULTANTS

AIRPORT INDUSTRIAL PARK

5755-A INDUSTRIAL PLACE COLORADO SPRINGS, CO 80916-1797

(719) 550-0660 FAX (719) 550-0978

June 2, 1997

DRAFT MEMORANDUM

To Whom It May Concern

RE: Schindler Elevator Corporation's 1997 SureGuide™ Escalator Step Retrofit/Exchange Program

Carl J. White & Associates, Inc. "ESCALATOR STEP SAFETY SIDEPLATES™"

Side-of-Step Entrapment Accidents

We recently obtained a copy of the 1997 Schindler "SureGuide™ Escalator Step Guidance System" sales literature announcing their step retrofit/exchange program for Westinghouse Moduline® B and B1 escalator steps.

Basically, Schindler offers as an upgrade, either new factory built steps, used reconditioned "like new steps" or to retrofit an owner's existing steps with their self-lubricating, high performance engineering polymer guide pad.

The stated purposes of these retrofits are to reduce the critical step-to-skirt gap by adjusting and maintaining the skirt panels to a closer tolerance than the ASME maximum allowable clearance of 3/16" (4.763mm) through the travel of the steps while also minimizing the side-to-side shifting of the steps in normal use. Under the like-new reconditioned option, Schindler offers cleaning and refinishing of the step treads and risers to their original appearance, replacement of the step trail wheel rollers and the installation of their SureGuide™ self lubricating polymer guide pads.

During sales presentations, Schindler has reported that they have accumulated a pool of over 1,000 used Westinghouse steps from their 1976 and later Moduline® escalator originally installed in the Washington Metropolitan Area Transit Authority (WMATA) subway system in Washington, D.C.

Currently, 20 Westinghouse Modular escalators have been removed from the WMATA system and replaced with 6 APV Baker, 8 O&K Escalators, Inc., 3 Montgomery-KONE and 3 Schindler escalators. All removed units except the three (3) in the Pentagon Bus Station, were outdoor escalators and were subjected to the elements. An additional 19 Fujitec escalators are under contract for new stations and bids are to be taken for the replacement of another 19 Moduline® escalators.

At this time it is unknown if the step cleaning process involves solvent pressure washing, ultrasonic cleaning and/or sandblasting of the steps. It is also is unknown if the refinishing involves an enamel, epoxy or powder coating finish. At least one escalator parts company selling reconditioned steps advertises that they sandblast and powder coat their steps after inspecting for any cracks in the steps.

Escalator step treads and risers can be economically cleaned and refinished on-site without removing the steps by professional electrostatic painting contractors.

An illustration on the Schindler SureGuide™ brochure shows an understep bracket anchored in to the diecast aluminum step tread to which the self-lubricating polymer guide pad is mounted with the head of the guide pad extending outward, beyond the sharp edges of the aluminum step tread and riser.

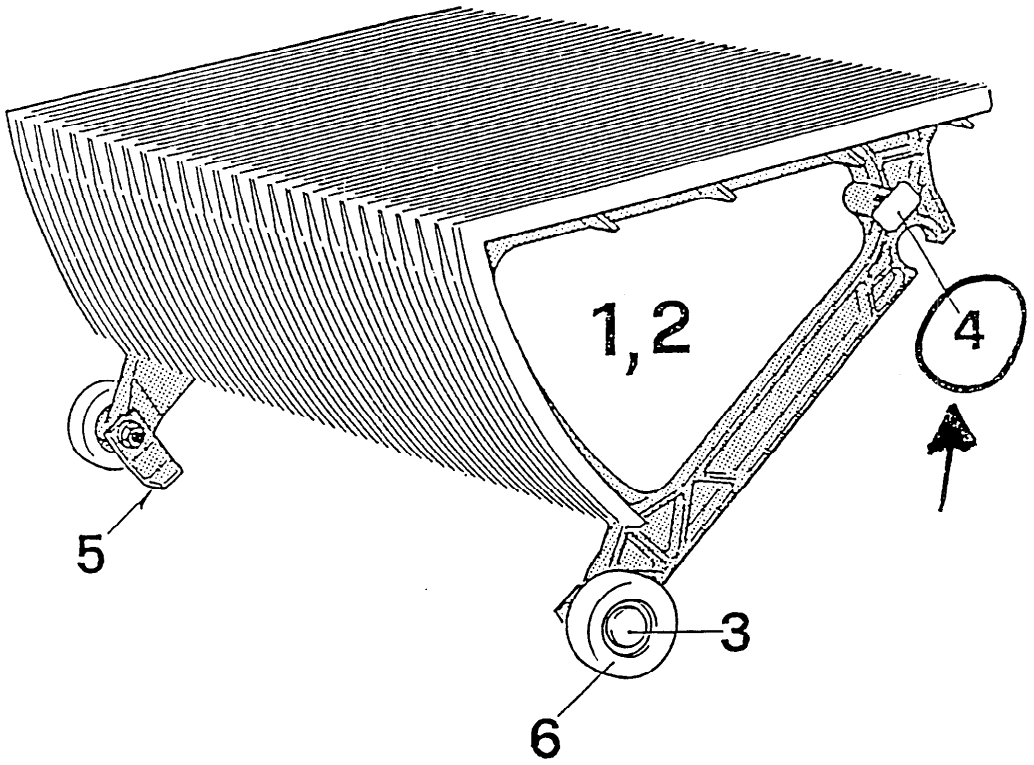

Although the Schindler literature does not state how much of a "tighter clearance" they can maintain than the 3/16" Code maximum, the Schindler Installation & Maintenance Manual for new Schindler escalators states that the guide pads are intended to "...limit the lateral (side-to-side) play" and " permits holding the gap between step and skirt to a maximum of 4mm on each side; with the sum of the gaps on each side not exceeding 7mm." (underlining added)

The 4mm metric dimension translates to 0.15625 or 5/32" or plus 1/8" and the 7mm equals 0.28125 or 9/32" or plus 1/4"(see conversion table attached).

By the SureGuide™ guide pad extending beyond the line of the tread and riser, it guarantees an exposed entrapment gap between the sharp edges of the tread and riser and skirt panel of approximately 5/32". The maximum Code allowable gap is 3/16" or 6/32" which is only about 1/32" greater than the Schindler guide pad arrangement.

Assuming the new or retrofitted Schindler step guide pads extend the same 4mm or 5/32" beyond their step sides as on their new escalators, there will never be a gap of less than 5/32" between the moving sharp tread and riser sides and the stationary metal skirt panel.

For many years, Schindler/Westinghouse along with the other major escalator manufacturers have expounded that skirt panels made from or treated with a low friction material was the almost cure-all to prevent side-of-step entrapment accidents. It is encouraging that Schindler has now advanced a step retrofit which offers to reduce "this critical space" while minimizing the "lateral play resulting from normal usage." The Carl J. White & Associates, Inc. "STEP SAFETY SIDEPLATE™/Canopy Guard and Lateral Step Guidance Device" has been offering this same protection and more for passengers since 1983 - 14 years ago.

Before going into a comparison of the Schindler step retrofit/guide pad with the STEP SAFETY SIDEPLATE™, it would be well to consider the mechanics of side-of-step entrapment accidents.

As illustrated on the adjacent drawing, the sides of the step tread and riser are very sharp. This occurs because the mold for diecasting the aluminum must have a draft or a slight taper to the sides of the pattern so that it may be ejected easily from the mold. This tapered angle is factory machined so that the sides of the step are squared to the square side of the skirt panel in order to minimize the gap. Additionally, should excessive lateral shifting of the steps develop over time, the softer aluminum steps contacting the harder stainless steel skirt panels, further sharpens the sides of the steps.

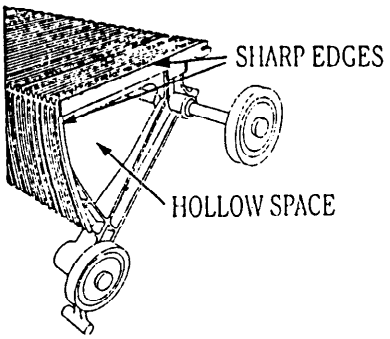

While falling accidents are the most common, entrapments in the space between the skirt panel and the sharp edges of the aluminum step tread and/or riser are historically the second most common and often the most serious. And small children are the primary victims.

Once their small toes, fingers, hands or calves become pinched between the skirt panel and the sharp edge of the aluminum step tread and riser, the wedging action exerts a force against the side of the step to push it sideways, while an equal and opposite pressure is exerted against the skirt panel which can increase the opening. On steps running in the down direction, the appendage becomes caught and curled behind the sharp edge of the aluminum riser. On up running escalators, the object wraps over the sharp edge of the step tread in a wringer action and becomes entrapped in the hollow space under the tread.

As can be seen on the adjacent drawing and specification below, the STEP SAFETY SIDEPLATES™ provide a "Canopy Guard which shall extend not less than 3" below the sides of the step tread and behind the riser." The design intent of this feature is to prevent objects from becoming curled behind the sharp edge of the riser or over the sharp edge of the tread into the open space under the step.

By contrast, the Schindler guide pad system guarantees an exposed sharp edge tread and riser and an exposed running clearance gap of approximately 5/32" with no protection from a "wringer action" should an object be caught in the side of the step.

While the SureGuide™ literature does not specify a step-to-skirt gap, the STEP SAFETY SIDEPLATE™ literature does specify "a maximum running clearance gap of not more than 1/16" (3/32") as noted below.

STEP SAFETY SIDEPLATES™ / CANOPY GUARD AND LATERAL STEP GUIDANCE DEVICE.

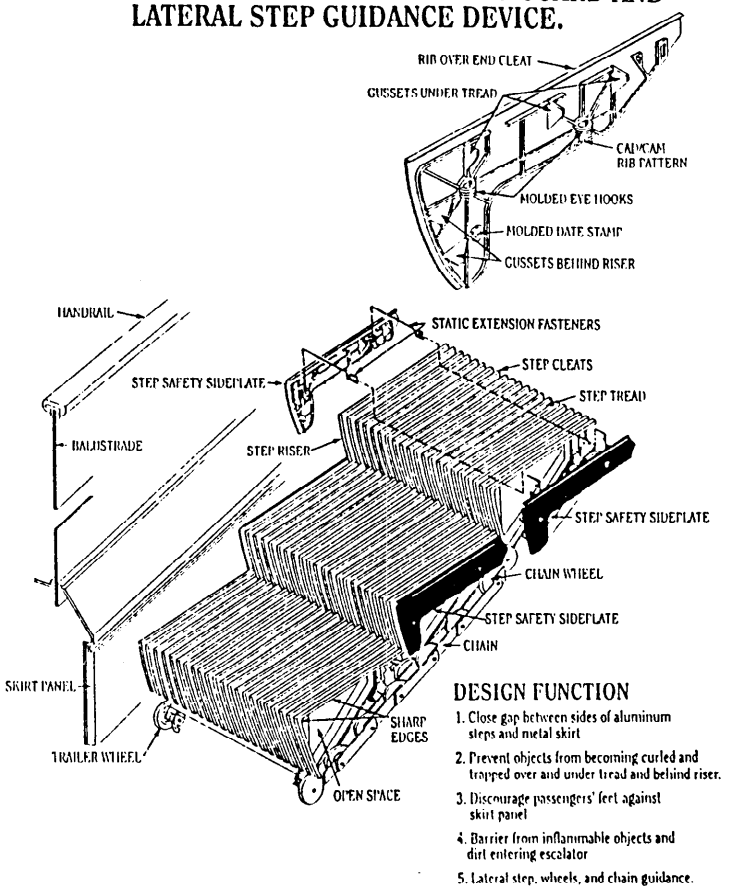

Specifications.

The steps shall be provided with high strength, internally lubricated, black copolymer STEP SAFETY SIDEPLATE™ guards securely attached to each side of the metal steps which shall extend not less than 3"(76.2mm) inches below the sides of the step tread and behind the riser. Adjacent skirt panels shall be adjusted plumb with a maximum running clearance gap of not more than 1/16" (.0625mm) at any point between the STEP SAFETY SIDEPLATES™ and skirt panels to reduce the possibility of objects becoming entrapped and their being curled over the sides of the step. The STEP SAFETY SIDEPLATES™ shall be as manufactured by Carl J. White & Associates, Inc.

Unlike the Schindler SureGuide™, the internally lubricated thermoplastic copolymer STEP SAFETY SIDEPLATE™ covers the entire sides of the metal step thus permitting the step to actually contact the skirt panels.

There have been numerous praises for the SAFETY SIDEPLATES™ p
and especially matches and cigarettes from falling over the side of the step
the cleaning of the drip pans. Oil sling-off from the chains or racks falli
creates a buildup on inflammable lint which was the cause of the London U
fire in the Kings Cross Station that resulted in the death of 32 people.

DEBBIE 6-4-97
PLEASE SUBSTITUTE THE YELLOW CORRECTED PAGES.
Carl

A serious concern to potential escalator owners purchasing reconditioned, used steps from the Washington, D.C. subway system or other sources should be their structural integrity before and after the guide pads are fastened on the step. Attached is a copy of a March 27, 1991 Washington Post newspaper article titled "Metro Escalator Steps in Need of Costly Lift...Rash of Failures Prompts Systemwide Check."

At this time, it is not known how used steps are to be inspected and/or tested. To insure their integrity, they should be thoroughly sandblasted, Magnafluxed, dipped and certified in writing to be free of any cracks. Visual inspection and the use of "Crack Check" or "Spotcheck Jr.™" for suspected faults should not be accepted.

Aside from the far greater advantages of the STEP SAFETY SIDEPLATES™ over the SureGuide™ system, as to both minimizing the step-to-skirt gap to approximately 5/32" vs. 2/32" maximum, the 3" Canopy Guard below the tread and behind the riser and eliminating the sharp metal sides, the economies of the two systems appear greatly in favor of the STEP SAFETY SIDEPLATES™ even when allowing for cleaning and electrostatic painting of the steps in-place on the escalator.

The two way freight charges, handling and installation labor costs for new, reconditioned or for the installation of the SureGuides™ on existing steps appear from quoted estimated prices to be a multiple of the labor and material prices to install the ESCALATOR STEP SAFETY SIDEPLATES™.

At the present time, there are 231 Moduline® escalators which have been retrofitted with the STEP SAFETY SIDEPLATES™ plus Westinghouse Model N escalators and a total of more than 630 escalator of 18 different step models operating with the STEP SAFETY SIDEPLATES™.

- END -

Metro Escalator Steps In Need of Costly Lift

Rash of Failures Prompts Systemwide Check

By Stephen C. Fehr
Washington Post Staff Writer

Steps are breaking on the 460 escalators at Metro rail stations with increasing frequency, requiring costly repairs and inconveniencing riders, officials said yesterday.

During the next 10 days, escalators will be out of service at various times as a contractor inspects all 66,000 steps to determine the extent of the problem. Officials will try to keep the longest escalators open during rush hour.

Step failures have occurred occasionally during the rail system's 15 years, but since December a rash of escalator problems has hit seven stations. The most recent breakdowns occurred Friday and Saturday at the Rhode Island Avenue and Dupont Circle stations on the Red Line in the District.

The other stations affected were Foggy Bottom and McPherson Square on the Blue and Orange lines, and Union Station, Woodley Park-Zoo and Bethesda on the Red Line.

No one was injured in the incidents. Transit officials said the failures are not necessarily a threat to riders, although there is the potential for injury if they fall as a result of abrupt stops.

The problem has occurred mostly with the uncovered cast-aluminum steps outside older stations. The steps get out of alignment, and the teeth at the edge of a step can catch as it goes under the plates at the top or bottom of the escalator. The step then fractures and can buckle the steps behind it, abruptly halting the escalator.

In addition to being almost 15 years old, the steps at many stations are exposed to the weather, and chemicals used to melt snow and ice. Vandals sometimes abuse the steps. A few weeks ago, two beer kegs were placed on the Dupont Circle escalator, cracking the steps. The constant shock from riders running down the steps also creates cracks, officials said.

"No system is designed to take that kind of abuse," said Fady P. Bassily, Metro's rail manager, adding that other rail systems have the same problem with some of their escalators. Asked whether riders can be injured, Bassily said: "The possibility of that happening is very, very remote."

Replacing steps is costing Metro more money every year, and is one of the reasons for the agency's current financial troubles. In the fiscal year that ends in July, Metro budgeted $300,000 to replace steps, but will need another $531,000 by July. The 1992 budget includes an increase from $8.1 million to $9.9 million for escalator maintenance, primarily because of the need to replace 2,080 steps. Each step replacement costs $214.

Metro is spending another $420,000 to install automatic switches on the escalators that will stop them before the steps can bunch up when one breaks, Bassily said.

The step failures are part of a broader, persistent problem with Metro escalators.

In the rail system's 15 years, 1,800 persons have been injured, two fatally, on escalators. Most of the accidents were caused by riders who fell, tripped, failed to hold the handrail or were pushed. Fourteen percent of the accidents were caused by mechanical failure, usually by sudden stops of the steps or handrail, according to a 1989 report.

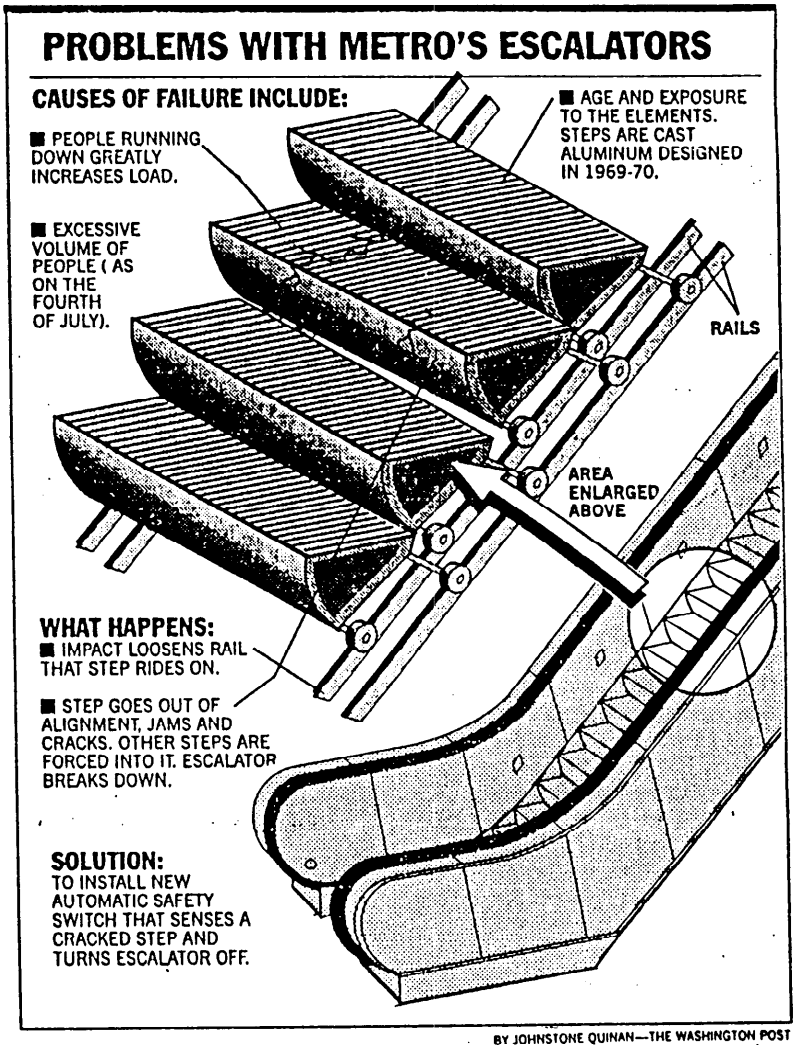

BY JOHNSTONE QUINAN—THE WASHINGTON POST

The escalators were installed and built by Westinghouse Elevator Co., which was purchased in 1989 by the Schindler Corp. of Switzerland. Metro awarded Schindler a $23.1 million contract in 1989 to maintain its escalators. That contract has been challenged in U.S. District Court here by Elcon Enterprises Inc., an Upper Marlboro company that said its bid was $5 million lower than Westinghouse's.

After a meeting yesterday between Schindler and Metro officials, the company was told to complete its check of the escalators within 10 days. Metro officials will then develop an escalator overhaul proposal for Metro's board of directors. Schindler also agreed to improve its maintenance of the escalators, and Metro said it would check on the company more often.

Although the cost of any overhaul will be covered under Schindler's current maintenance contract, officials said, the cost of repairing the system is rising. The increase contributed to Metro's unexpectedly high costs this year, part of the reason the transit agency is proposing a fare increase averaging 18 percent.

Judy Mann is away. Her column will resume when she returns.

Carl J. White & Associates, Inc.

ELEVATOR & ESCALATOR CONSULTANTS

AIRPORT INDUSTRIAL PARK

5755-A INDUSTRIAL PLACE COLORADO SPRINGS, CO 80916-1797

(719) 550-0660 FAX (719) 550-0978

DECIMAL & MILLIMETER EQUIVALENTS

	DECIMALS	MILLIMETERS
1/64	0.015625	0.397
1/32	.03125	0.794
3/64	.046875	1.191
1/16	.0625	1.588
5/64	.078125	1.984
3/32	.09375	2.381
7/64	.109375	2.778
1/8	.1250	3.175
9/64	.140625	3.572
5/32	.15625	3.969
11/64	.171875	4.366
3/16	.1875	4.763
13/64	.203125	5.159
7/32	.21875	5.556
15/64	.234375	5.953
1/4	.2500	6.350
17/64	.265625	6.747
9/32	.28125	7.144
19/64	.296875	7.541
5/16	.3125	7.938
21/64	.328125	8.334
11/32	.34375	8.731
23/64	.359375	9.128
3/8	.3750	9.525
25/64	.390625	9.922
13/32	.40625	10.319
27/64	.421875	10.716
7/16	.4375	11.113
29/64	.453125	11.509
15/32	.46875	11.906
31/64	.484375	12.303
1/2	.5000	12.700
33/64	0.515625	13.097
17/32	.53125	13.494
35/64	.546875	13.891
9/16	.5625	14.288
37/64	.578125	14.684
19/32	.59375	15.081
39/64	.609375	15.478
5/8	.6250	15.875
41/64	.640625	16.272
21/32	.65625	16.669
43/64	.671875	17.066
11/16	.6875	17.463
45/64	.703125	17.859
23/32	.71875	18.256
47/64	.734375	18.653
3/4	.7500	19.050
49/64	.765625	19.447
25/32	.78125	19.844
51/64	.796875	20.241
13/16	.8125	20.638
53/64	.828125	21.034
27/32	.84375	21.431
55/64	.859375	21.828
7/8	.8750	22.225
57/64	.890625	22.622
29/32	.90625	23.019
59/64	.921875	23.416
15/16	.9375	23.813
61/64	.953125	24.209
31/32	.96875	24.606
63/64	.984375	25.003
1	1.000	25.400

MM	INCHES	MM	INCHES
.1	.0039	46	1.8110
.2	.0079	47	1.8504
.3	.0118	48	1.8898
.4	.0157	49	1.9291
.5	.0197	50	1.9685
.6	.0236	51	2.0079
.7	.0276	52	2.0472
.8	.0315	53	2.0866
.9	.0354	54	2.1260
1	.0394	55	2.1654
2	.0787	56	2.2047
3	.1181	57	2.2441
4	.1575	58	2.2835
5	.1969	59	2.3228
6	.2362	60	2.3622
7	.2756	61	2.4016
8	.3150	62	2.4409
9	.3543	63	2.4803
10	.3937	64	2.5197
11	.4331	65	2.5591
12	.4724	66	2.5984
13	.5118	67	2.6378
14	.5512	68	2.6772
15	.5906	69	2.7165
16	.6299	70	2.7559
17	.6693	71	2.7953
18	.7087	72	2.8346
19	.7480	73	2.8740
20	.7874	74	2.9134
21	.8268	75	2.9528
22	.8661	76	2.9921
23	.9055	77	3.0315
24	.9449	78	3.0709
25	.9843	79	3.1102
26	1.0236	80	3.1496
27	1.0630	81	3.1890
28	1.1024	82	3.2283
29	1.1417	83	3.2677
30	1.1811	84	3.3071
31	1.2205	85	3.3465
32	1.2598	86	3.3858
33	1.2992	87	3.4252
34	1.3386	88	3.4646
35	1.3780	89	3.5039
36	1.4173	90	3.5433
37	1.4567	91	3.5827
38	1.4961	92	3.6220
39	1.5354	93	3.6614
40	1.5748	94	3.7008
41	1.6142	95	3.7402
42	1.6535	96	3.7795
43	1.6929	97	3.8189
44	1.7323	98	3.8583
45	1.7717	99	3.8976
		100	3.9370

1 mm = .03937″

.001″ = .0254 mm

STEP SAFETY SIDEPLATES™ / CANOPY GUARD AND LATERAL STEP GUIDANCE DEVICE.

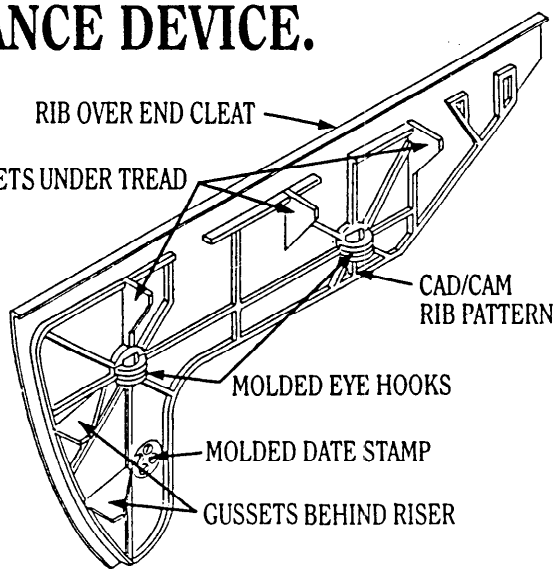

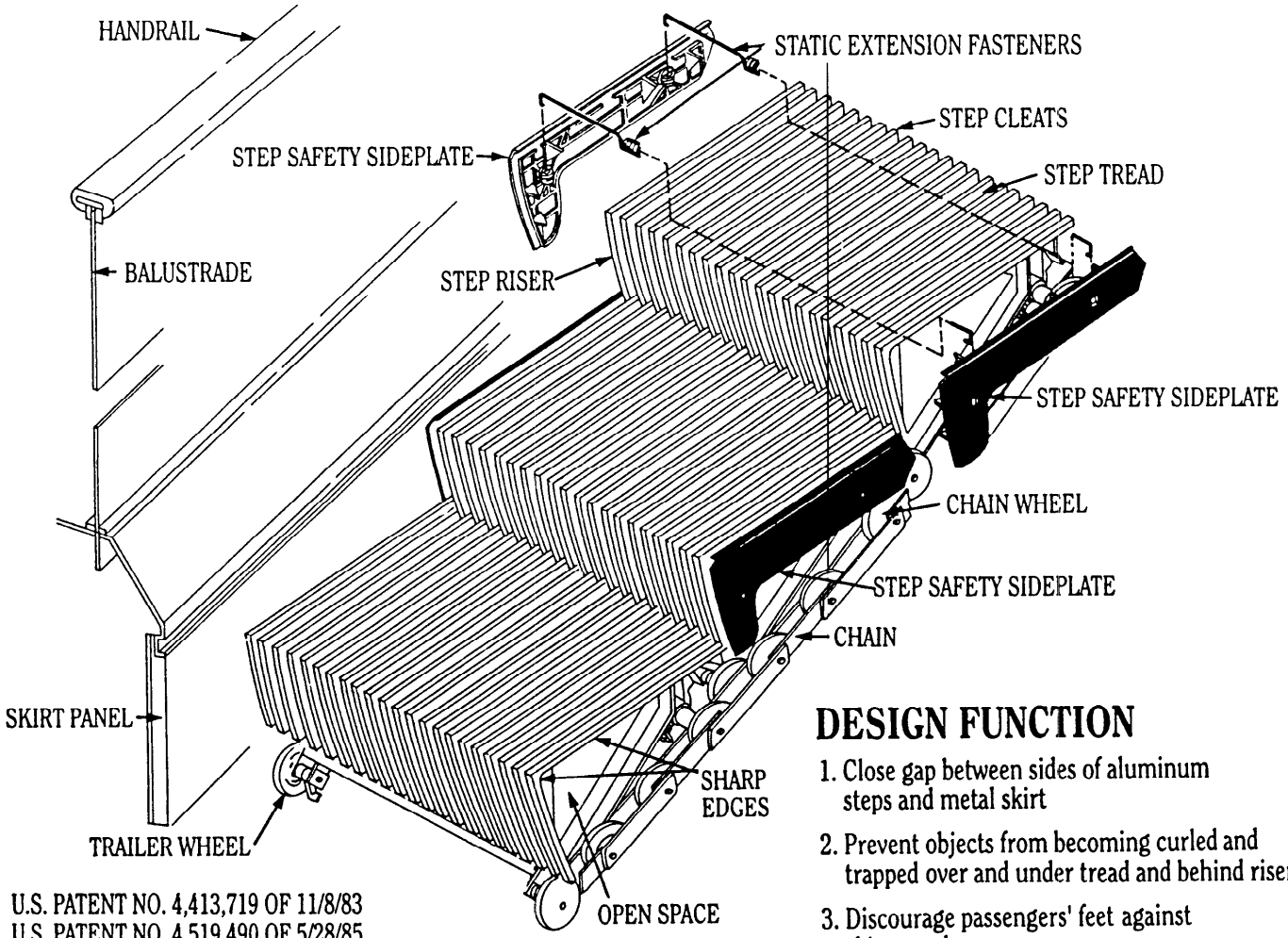

DESIGN FUNCTION

1. Close gap between sides of aluminum steps and metal skirt
2. Prevent objects from becoming curled and trapped over and under tread and behind riser.
3. Discourage passengers' feet against skirt panel
4. Barrier from inflammable objects and dirt entering escalator
5. Lateral step, wheels, and chain guidance.

U.S. PATENT NO. 4,413,719 OF 11/8/83
U.S. PATENT NO. 4,519,490 OF 5/28/85
CANADIAN PATENT NO. 1,187,441 OF 5/12/85
ITALIAN PATENT NO. 1,159,267 OF 2/25/87
EUROPEAN PATENT NO. 0079957 OF 1/27/88

COPYRIGHT 1990 CARL J. WHITE & ASSOCIATES, INC.

STEP SAFETY SIDEPLATES™ / CANOPY GUARD AND LATERAL STEP GUIDANCE DEVICE.

Technical Description.

Each STEP SAFETY SIDEPLATE™ contains an internal lubricant so that contact between the moving step and skirt panel has no effect on the efficiency of the escalator drive. They have a dynamic coefficient of friction of 0.15 against steel measured by the ASTM D 1894 test method and are unaffected by a wide range of acids, oils, greases and solvents. They also have a UL fire rating of HB-94, better than the step wheels and handrail materials.

Each type of escalator step has an individually designed STEP SAFETY SIDEPLATE™ and separate tooling. The parts are single cavity injection molded in a 300-ton machine. Each part is hand clamped in a specially made fixture to create a desired bend while curing. The injection sprue is hand cut and drilled flush.

Each piece has an injection molded date stamp for quality assurance purposes. Both design tolerances and fit to the steps are checked throughout the manufacturing process.

The reinforcement rib pattern was CAD/CAM designed for rigidity and impact resistance. The boomerang shape is for ease of step handling.

There are three different lengths of sideplate attachment fasteners for 24"(600mm),32"(800mm)and 40"(1000mm) nominal width steps. Each is computer designed and made of certified ASTM A-227 pre-galvanized hard drawn carbon steel spring wire and stress relieved to 500-degrees F (260 C).

Ribs over and under the tread and behind the STEP SAFETY SIDEPLATE™ riser mechanically locks the sideplates into the hollow nest of the step. The spring fasteners provide lateral tension to hold the plates against the step and to prevent over/under tightening.

Specifications.

The steps shall be provided with high strength, internally lubricated, black copolymer STEP SAFETY SIDEPLATE™ guards securely attached to each side of the metal steps which shall extend not less than 3"(76.2mm) inches below the sides of the step tread and behind the riser. Adjacent skirt panels shall be adjusted plumb with a maximum running clearance gap of not more than 1/16" (.0625mm) at any point between the STEP SAFETY SIDEPLATES™ and skirt panels to reduce the possibility of objects becoming entrapped and their being curled over the sides of the step. The STEP SAFETY SIDEPLATES™ shall be as manufactured by Carl J. White & Associates, Inc.

Carl J. White & Associates, Inc.
Elevator & Escalator Consultants
P.O. Box 60340 / Colorado Springs,Colorado / 80960-0340

For a copy of THE ESCALATOR SIDEPLATE™ STORY VCR and further information about this major escalator safety development please contact your escalator maintenance contractor or call 1-800-626-3555 in both the U.S. and Canada.

STEP SAFETY SIDEPLATES™ / CANOPY GUARD AND LATERAL STEP GUIDANCE DEVICE.

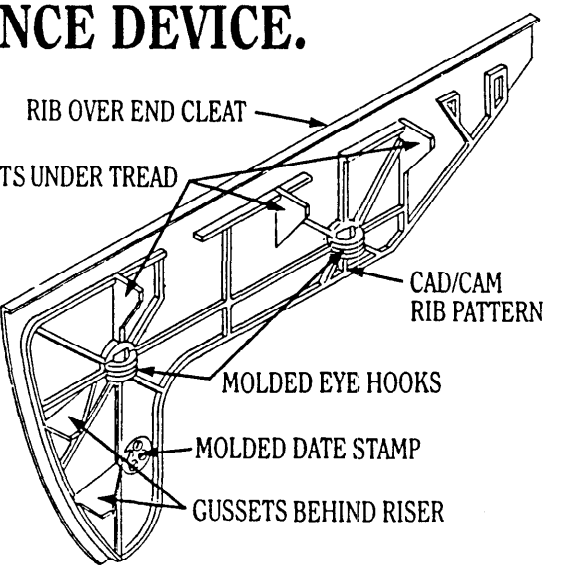

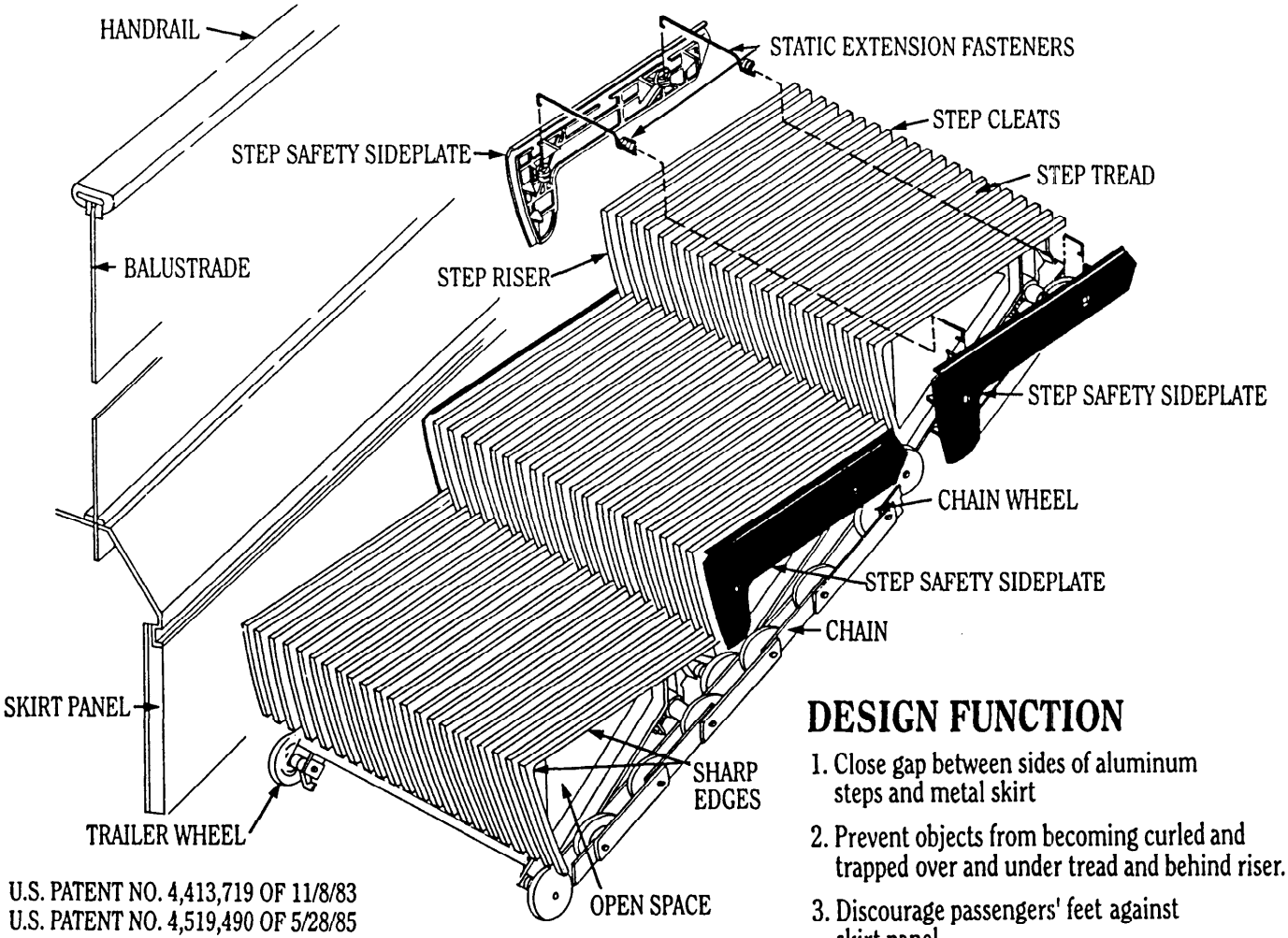

U.S. PATENT NO. 4,413,719 OF 11/8/83
U.S. PATENT NO. 4,519,490 OF 5/28/85
CANADIAN PATENT NO. 1,187,441 OF 5/12/85
ITALIAN PATENT NO. 1,159,267 OF 2/25/87
EUROPEAN PATENT NO. 0079957 OF 1/27/88

COPYRIGHT 1990 CARL J. WHITE & ASSOCIATES, INC.

DESIGN FUNCTION

1. Close gap between sides of aluminum steps and metal skirt
2. Prevent objects from becoming curled and trapped over and under tread and behind riser.
3. Discourage passengers' feet against skirt panel
4. Barrier from inflammable objects and dirt entering escalator
5. Lateral step, wheels, and chain guidance.

STEP SAFETY SIDEPLATES™ / CANOPY GUARD AND LATERAL STEP GUIDANCE DEVICE.

Technical Description.

Each STEP SAFETY SIDEPLATE™ contains an internal lubricant so that contact between the moving step and skirt panel has no effect on the efficiency of the escalator drive. They have a dynamic coefficient of friction of 0.15 against steel measured by the ASTM D 1894 test method and are unaffected by a wide range of acids, oils, greases and solvents. They also have a UL fire rating of HB-94, better than the step wheels and handrail materials.

Each type of escalator step has an individually designed STEP SAFETY SIDEPLATE™ and separate tooling. The parts are single cavity injection molded in a 300-ton machine. Each part is hand clamped in a specially made fixture to create a desired bend while curing. The injection sprue is hand cut and drilled flush.

Each piece has an injection molded date stamp for quality assurance purposes. Both design tolerances and fit to the steps are checked throughout the manufacturing process.

The reinforcement rib pattern was CAD/CAM designed for rigidity and impact resistance. The boomerang shape is for ease of step handling.

There are three different lengths of sideplate attachment fasteners for 24"(600mm),32"(800mm)and 40"(1000mm) nominal width steps. Each is computer designed and made of certified ASTM A-227 pre-galvanized hard drawn carbon steel spring wire and stress relieved to 500-degrees F (260 C).

Ribs over and under the tread and behind the STEP SAFETY SIDEPLATE™ riser mechanically locks the sideplates into the hollow nest of the step. The spring fasteners provide lateral tension to hold the plates against the step and to prevent over/under tightening.

Specifications.

The steps shall be provided with high strength, internally lubricated, black copolymer STEP SAFETY SIDEPLATE™ guards securely attached to each side of the metal steps which shall extend not less than 3"(76.2mm) inches below the sides of the step tread and behind the riser. Adjacent skirt panels shall be adjusted plumb with a maximum running clearance gap of not more than 1/16" (.0625mm) at any point between the STEP SAFETY SIDEPLATES™ and skirt panels to reduce the possibility of objects becoming entrapped and their being curled over the sides of the step. The STEP SAFETY SIDEPLATES™ shall be as manufactured by Carl J. White & Associates, Inc.

Carl J. White & Associates, Inc.
Elevator & Escalator Consultants
P.O. Box 60340 / Colorado Springs,Colorado / 80960-0340

For a copy of THE ESCALATOR SIDEPLATE™ STORY VCR and further information about this major escalator safety development please contact your escalator maintenance contractor or call 1-800-626-3555 in both the U.S. and Canada.

Carl J. White & Associates, Inc.

ELEVATOR & ESCALATOR CONSULTANTS

AIRPORT INDUSTRIAL PARK

5755-A INDUSTRIAL PLACE COLORADO SPRINGS, CO 80916-1797

(719) 550-0660 FAX (719) 550-0978

Carl J. White

RESUME'

EDUCATION:

1952-1955	Southeastern Louisiana University, Hammond, Louisiana B.A. - Business Administration
1948-1949	Tulane University, New Orleans, Louisiana

MILITARY:

1949-1956	United States Marine Corps Reserves
1950-1952 (Active Duty)	United States Marine Corps; Technical Sergeant Aircraft Engine, Hydraulic & Instrument Mechanic

EMPLOYMENT:

1981-Present **Carl J. White & Associates, Inc.** - Colorado Springs, Colorado
Elevator & Escalator Consultants
President

Design, Engineering, Tooling, Molding, Marketing, Sales & Installation of Escalator Step Safety Sideplate Device. Consulting Services in layout, specifications and performance for new and existing buildings; maintenance evaluation surveys; elevator and escalator litigation.

1978-1981 **Lerch, Bates & Associates, Inc.** - Miami, Florida
Elevator & Escalator Consultants
Regional Vice President

Oldest and largest exclusively elevator and escalator consulting engineering firm in the country.

1964-1977 **Elevator Sales & Service, Inc.** - Miami, Florida
President, Co-owner and Founder

Installation of over 800 elevators, escalators, and dumbwaiters with contract maintenance on more than 1,000 units of seventeen manufacturers