UNITED STATES
CONSUMER PRODUCT SAFETY COMMISSION
WASHINGTON, DC 20207

Memorandum

CPSC/OFFICE OF THE SECRETARY

2000 MAR -2 A 9:24

Date: FEB 25 2000

TO : The Commission
Sadye E. Dunn, Secretary

THROUGH: Pamela Gilbert, Executive Director PG
Michael S. Solender, General Counsel MSS

FROM : Ronald L. Medford, Assistant Executive Director, RLM
Office of Hazard Identification and Reduction
Sheela Kadambi, Electrical Engineer, Division of Electrical Engineering

SUBJECT : Electric and Gas Clothes Dryers – Staff Evaluation and Contractor Report

This memorandum transmits a report on an evaluation of clothes dryer fires conducted by the U.S. Consumer Product Safety Commission (CPSC) staff (Tab A). The memorandum also transmits a report on an analysis of clothes dryer fires that was performed by an independent contractor, FTI Consulting (Tab B). The conclusions in the contractor report are consistent with the CPSC staff's findings and conclusions.

The CPSC staff plans to send the reports to Underwriters Laboratories and CSA International recommending that they review the results of our work and consider revising the product safety standards to address the risks of fire in clothes dryers that result from reduced airflow from the build-up of lint in the duct/vent and the lint trap.

NOTE: This document has not been reviewed or accepted by the Commission.
Initial rl **Date** 2/25/00

CPSA 6 (b)(1) Cleared
2/25/00
X No Mfrs/PrvtLbrs or Products Identified
___ Excepted
___ Firms Notified,
Comments Processed.

TAB A

CLOTHES DRYER PROJECT

FINAL REPORT ON ELECTRIC AND GAS CLOTHES DRYERS
February 2000

Directorate for Engineering Sciences

S. Kadambi

CPSA 6 (b)(1) Cleared
No Mfrs/PrvtLblers or
Products Identified
Excepted by
Notified

TABLE OF CONTENTS

INTRODUCTION	2
PRODUCT DESCRIPTION	2
INCIDENT DATA	4
MARKET INFORMATION	5
REVIEW OF VOLUNTARY STANDARDS	6
PRODUCT EVALUATION	7
CONCLUSION AND RECOMMENDATIONS	8

INTRODUCTION

For over four decades consumers have used clothes dryer appliances in their homes Since their introduction into the market, manufacturers have enhanced dryer designs to improve efficiency and safety. However, there were an estimated 15,500 fires in 1996 associated with clothes dryers, resulting in 20 deaths, 320 injuries and about $84.4 million in property damage[1].

Given the estimated number of fires related to clothes dryers, the U.S. Consumer Product Safety Commission (CPSC) initiated a project in Fiscal Year '98 to assess the adequacy of the applicable voluntary standards. The project included an assessment of incident data and reports; analysis of societal costs associated with dryer related fires, and assessment of industry electric and gas voluntary safety standards. The project also included testing of new electric and gas dryers. Results of those tests, along with the results of the staff's assessments, are presented in this report.

PRODUCT DESCRIPTION

The two basic types of clothes dryers defined by the primary fuel source for heating the air are electric and gas. In both types, hot air produced by the heat source is drawn through tumbling clothes inside a rotating drum and exhausted through ducting, which carries the hot, damp air outside. Since their introduction in the market, dryer designs have been enhanced to improve efficiency and safety. Improvements have included humidity sensing components to automate drying times and multiple thermostats for over-temperature protection. While the humidity sensor improved efficiency, thermostats improved the safety of the dryer. These thermostats either control or limit the temperature in the dryer. Except for the heat source, the function of the major components in electric and gas dryers is similar. A 240 volt-powered heating element is the heat source in an electric dryer, whereas a gas burner is the heat source in a gas dryer. All other components in electric and gas clothes dryers are energized at 120 volts, including the motor that turns the drum and circulates the air and the control timer.

When the start button is pressed/turned (and the dryer door closed), electrical power is applied to the motor. The motor is connected to the drum by a drive belt. A bearing at the rear and plastic slides at the front typically support the drum. A switch on the shaft on the motor is operated by centrifugal force. Electrical power to the dryer circuits, including the motor, is routed through the centrifugal switch, which does not close until the motor reaches its normal operating speed. Therefore if the start button is not held until the motor reaches its operational speed, the dryer stops. Also, when the dryer door is opened, power to the motor is interrupted and the centrifugal switch opens as the motor slows down, requiring the user to re-start the dryer by pushing/turning the start button.

The blower pulls air from the room through the heat source, through the drum and pushes the exhaust air from the dryer through the duct to the outside vent. In electric dryers, the heat source is energized when the drive motor is at normal operating speed. Both the timer and

[1] Ault, Kimberly et. al., "1996 Residential Fire Loss Estimates", U.S Consumer Product Safety Commission, Directorate for Epidemiology, October 1998.

thermostats are in series with the energized coiled heaters In gas dryers, the heat source is a gas burner and, for safety reasons, the gas passes through two valves before reaching the burner opening where it is ignited. A pressure regulator controls the flow of gas. The safety valve is held open through an electrical circuit. When the voltage is cut off through control switches (automatic or manual, including when the dryer door is opened) the gas flow is turned off automatically.

Typical airflow in a clothes dryer is shown in the picture below.

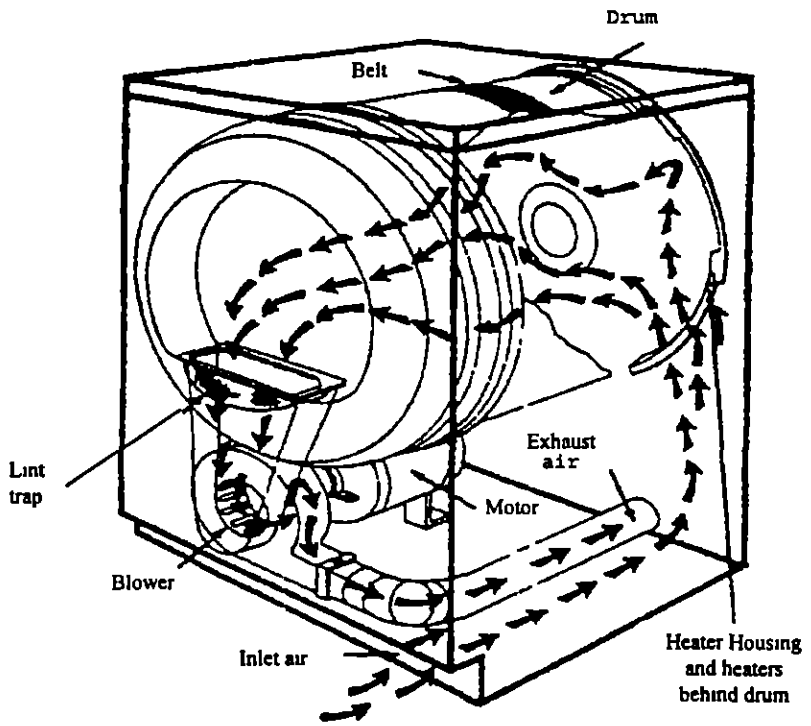

INCIDENT DATA

During 1996, there were an estimated 15,500 fires associated with clothes dryers, 20 deaths, 320 injuries, and about $84.4 million in property loss in residential structures. Electric clothes dryers were associated with 8,600 fires, less than 10 deaths, 170 injuries, and about $47 5 million in property loss. Gas clothes dryers were associated with 3,200 fires, less than 10 deaths, 70 injuries, and about $14.5 million in property loss. The remaining fires, deaths, injuries and property losses were associated with undetermined types of clothes dryers. Based on the estimated dryer fires in 1996, the Directorate for Economic Analysis estimates the value of societal costs from clothes dryer fires is about $202 million.

The CPSC In-Depth-Investigation (IDI) File was searched for clothes dryer fire-related incidents occurring between 1993 and 1997 to provide information about scenarios surrounding these types of fires. Items of interest included the location of fires within the dryer, the age of the dryer, whether the lint trap was cleaned regularly, whether the dryer was in use when the fire started, frequency of consumer usage of the dryer, and whether there were prior problems with the dryer. The Hazard Analysis Division in the Directorate of Epidemiology and Health Sciences reviewed a total of 79 in-depth investigations. (See Tab A)

Of the 79 in-depth investigations reviewed, 48 reports described fire incidents related to electric clothes dryers, 22 reports described fire incidents related to gas clothes dryers, and in the remaining 9 reports, the type of clothes dryer could not be determined (See Tab A, Table 1). In the incident reports in which the fire origin was stated, the duct or the venting system was reported as the most frequent location (14 incidents), and the lint trap was noted as the second most frequently reported location (10 incidents) of the fire within the clothes dryer. Table 3 in Tab-A shows that only 29 of the 79 case reports indicated whether the consumers cleaned the lint trap regularly. Of these 29, 14 reported that the consumer cleaned the lint trap regularly and 15 reported that the consumer did not clean the lint trap on a regular basis. Fires in the lint trap and transition ducts/vents were reported for approximately 1/3 of the 79 investigated fires. In these cases the lint reportedly caught fire, and combustibles near the dryers propagated the fire. Fires reported at locations not related directly to the duct/vent or lint trap did not point to any particular failure mechanism. Fire locations such as motor, electrical system, and thermostat could be cases where these parts overheated due to the lack of proper exhaust airflow.

MARKET INFORMATION

According to estimates published by ***Appliance*** magazine, for the last 10 years (1988-1997) annual shipments of electric clothes dryers have ranged from about 3.3 million to 4.5 million units (in 1997). Shipment of gas clothes dryers have ranged from about 1.0 million to 1.3 million. Shipments of another product category, compact dryers, generally ranged from about 200,000 to 300,000 ***Appliance*** also estimates that the product saturation level (percentage of households with clothes dryers) was 55.5 percent for electric clothes dryers and 17.8 percent for gas dryers in 1997. Therefore, about 73 percent of households have a clothes dryer. Since there were about 100 million households in the U.S. in 1997, it is estimated that about 73 million clothes dryers were in use. This estimate is consistent with estimates from CPSC's product population model using historical shipment data and an assumed expected product life of about 16 years. (See Tab-B)

REVIEW OF VOLUNTARY STANDARDS

UL 2158, Electric Clothes Dryers, is the voluntary safety standard for electric clothes dryers and ANSI Z21.5 1 (CGA 7.1) is the voluntary safety standard for gas clothes dryers Since CPSC data indicate that the largest known contributing factor to clothes dryer related fires is accumulation of lint in the air flow system, the review of the voluntary standards focussed on obstructed air flow.

Current voluntary standards do not include requirements that evaluate the long-term effects of blocked or insufficient exhaust airflow. These standards address the issue of blocked lint screen and exhaust as follows:

For electric dryers, UL 2158 paragraph 19.5 *Blockage of lint screen and exhaust,* defines abnormal tests to address the immediate occurrence of a fire hazard. The dryer is operated through one conditioning cycle for the maximum length of time as dictated by the timer. All temperature-regulating and -limiting devices are then defeated and the appliance operated under this condition, with the timer modified so as to result in continuous operation, until ultimate results are obtained or for 7 hours, whichever is less. These tests are repeated for each of the following four operating modes: dryer operated with 75% and 100% lint screen blocked, and 75% and 100% exhaust blocked.

The criteria for passing these abnormal operational tests is that the following results do not occur within seven hours:

- a) emission of flame or molten metal,
  (Note: *Drops of melted solder are not considered to be molten metal*),
- b) glowing or flaming of combustible material upon which the appliance may be placed or that may be in proximity to the appliance as installed; or,
- c) indication of flame or glowing embers in the load of clothes, either before or after the access door is opened

The ANSI Z21.5.1 (for gas dryers) in paragraph 2.14.2 addresses the same issue under, c. when the lint screen(s) and the exhaust means are blocked. The method of test is: "With the lint screen(s) blocked and with the main exhaust opening sealed shut, the unloaded dryer shall be operated until the temperature-limiting device functions to shut off the gas supply. When the limiting device functions, the temperature of the air or flue gases discharged through any openings in the cabinet shall not exceed 250°F(121°C) at the instant the device functions. Non-functioning of the temperature-limiting device shall be considered as noncompliance with this provision." The ANSI standard test method relies on a thermal-limiting device (high limit thermostat) to shut the heat source off. If for any reason the thermal limiting device malfunctions or fails under described conditions that could be a potential fire hazard.

PRODUCT EVALUATION

The project included tests on a gas and an electric clothes dryer to characterize the temperature profile of the dryers under various operating conditions. The report on the testing and results is included at Tab C.

Similar test methods were followed for both the gas and electric dryers except where the differences between the two models would not allow it Thermocouples were installed at various locations within each dryer, particularly at locations along the flow of air (See Tab C). During the tests, the dryers' lint traps were not cleaned to allow the lint to accumulate and gradually obstruct the airflow. Temperatures were recorded for various settings with several different loads of clothes.

During one series of tests, a wad of collected lint was stuffed into the vent to simulate substantial obstruction of airflow in the transition duct/vent system. In this case, the electric dryer was run in a permanent press cycle with a small load of damp clothes. The temperatures at points internal to the dryer rose higher than the temperature when the airflow was unobstructed. At the end of the cycle, the clothes in the dryer were not completely dry. With the gas dryer, under similar conditions, a small load was run on a high heat, automatic dry setting. As with the electric dryer, the temperatures internal to the appliance were considerably higher than when the airflow was clear of the obstruction. It was observed that the clothes remained damp at the end of the drying cycle.

The tests show that for both types of dryers, when airflow is obstructed by partial blockage of the exhaust and lint screen, the temperatures inside the dryer rise significantly. While the temperatures did not rise high enough to ignite material inside the drum or the components within the appliance, the indication is that if the dryer lint screen is not cleaned and the exhaust vent is not maintained reasonably clear of accumulated lint, the temperature inside the drum and chassis will consistently be elevated above normal operating conditions. The elevated temperatures over long periods of time can degrade critical components (wire, connectors, motor, etc.) prematurely. The staff is concerned that this degradation could result in a component failure, causing a spark or flame that could ignite nearby combustibles (e.g. lint).

The importance of sufficient airflow through the clothes dryer for safe operation is well documented. Under a CPSC contract, Contract # CPSC-C-76-0078, The Illinois Institute of Technology Research Institute (IITRI) submitted a report to CPSC in September of 1977 titled "INVESTIGATION OF STANDARDS FOR SAFETY OF INSTALLED ELECTRICAL EQUIPMENT." Under paragraph # 5.6.2-Lint Indicator (page # 200) ITRII states that failure to maintain sufficient airflow elevates the internal dryer temperatures, causing thermal stress to electrical components, setting the stage for fires.

According to Norman D. Reese et al. in their article Clothes Dryer Fires in "Fire And Arson Investigator" magazine (Volume 48 No. 4, July 1998, Page # 17), "...lint fires often begin in the lint trap, especially when the trap is cleaned infrequently...When lint is left to accumulate in the filter, the airflow is impeded and the temperature will increase accordingly upstream of,

and at the filter. ...A lint fire originating in the trap generally incinerates the plastic blower and housing and, until the blower is damaged from the heat or the motor stops turning, can direct a blast of flame from the rear of the dryer against a combustible wall surface."

In the dryer owner's manual the manufacturers emphasize the importance of installing the transition duct according to their instructions using only rigid metal. They also stress the importance of cleaning the lint screen before each use. As a preventive maintenance measure, manufacturers recommend periodic cleaning of lint from exhaust duct/vent and from inside the dryer.

CONCLUSION AND RECOMMENDATIONS

Although both gas and electric dryers include a number of over-temperature protection features, an estimated 15,500 fires are annually attributed to dryers. CPSC tests, as well as other sources such as fire investigators, indicate that accumulation of lint in the lint screen and in the external vent system reduces the flow of air through the dryer and causes internal temperatures to rise. Because the dryer continues to function without any warning to the user (other than ineffective drying of the clothes), the electrical components become thermally stressed setting the stage for a failure to occur that can result in a fire. Although a specific failure mechanism is not readily described, the critical importance of proper airflow is well recognized.

A recent design feature, called lint alert, is presently available on some dryer models. This is a mechanical device intended to produce a sound that warns users of excessive lint accumulation in the lint screen. At present such a device is neither part of the safety standard, nor incorporated in all available models of clothes dryers. Incorporating a requirement for an effective lint alert may help maintain sufficient airflow and thereby reduce the elevated temperatures inside clothes dryers thus reducing the likelihood of a fire. However, incorporating a restricted airflow detection system that shuts down the appliance would address continued operation of the appliance at elevated internal temperatures that could, over time, degrade the dryer components and increase the risk of a failure that could result in a fire.

It is the view of the CPSC staff that systems should be included in clothes dryers that essentially shut down the dryer when the airflow is obstructed. These mechanisms should be evaluated for their reliability, and consideration should be given to incorporate these into the voluntary safety standards.

FTI/Consulting

ENGINEERING ANALYSIS OF GAS AND ELECTRIC CLOTHES DRYER FIRES FINAL REPORT

202 Research Drive
Annapolis Maryland 21401
410-224-8770 · 800-334-5701
Fax 410-266-0765

FTI/Consulting

ENGINEERING ANALYSIS OF GAS AND ELECTRIC CLOTHES DRYER FIRES FINAL REPORT

Prepared for:
The U.S. Consumer Product
Safety Commission
Directorate for Engineering Sciences
Project Order No. CPSC-S-99-5130

PREPARED BY:
FTI CONSULTING, INC.
FTI MATTER NO. 9903.0002

NOVEMBER 18, 1999

TABLE OF CONTENTS

1.0 INTRODUCTION 1

2.0 BACKGROUND 3

3.0 INVESTIGATION 4

4.0 ANALYSIS 10

5.0 CONCLUSIONS 14

6.0 RECOMMENDATIONS 15

Appendix A – Product Standards Index

Appendix B – Bibliography – Clothes Dryer Fire Literature

Appendix C – Comparison Matrix of Dryer Features – Dryer Service and Operating Manuals

Appendix D – Comparison of Dryer Features – Figures 1 – 6

Appendix E – Fault Tree, Figures 7 and 8, and Supporting Data

1.0 INTRODUCTION

On July 23, 1999, FTI Consulting, Inc. (FTI) entered into a contract agreement, order no. CPSC-S-99-5130, with the U.S. Consumer Product Safety Commission (CPSC) to conduct an independent engineering analysis of causes of fires related to clothes dryers as stated in Section C.2., "Statement of Work," of the contract. CPSC requested that FTI perform an objective review of the information that CPSC staff had developed for its Clothes Dryer Project under the Directorate for Engineering Sciences, and assess applicable voluntary standards. In addition, FTI was requested to supplement this information with any other information that may not have been available or considered by the CPSC staff as stated in Section C.1., "Background Information," of the contract.

Specifically, as set forth in Section C.2., "Statement of Work," of the contract, FTI was asked to perform the following work:

- Evaluate the risks of fire presented by gas and electric clothes dryers considering installation factors such as exhaust venting, service factors such as lint screen cleaning, and the consequences in engineering terms when there are lapses in adherence to recommended installation and service practices;

- Consider the relevance of the current voluntary safety standards, UL 2158 for Electric Clothes Dryers, dated June 1997, and ANSI Z21.5.1 for Gas Clothes Dryers, dated 1995;

- Evaluate fire or potential fire incident information available from CPSC and/or any other source that is relevant;

- Perform a literature search and produce a bibliography for relevant materials regarding the risk of fire from clothes dryers;

- Review and consider the CPSC staff findings in the CPSC staff's draft report titled "Report on Electric and Gas Clothes Dryers" dated March 1999;

- Consider the use of internal safety devices, including thermostats, thermal fuses, thermal protectors for motors, thermal limiting devices, other sensors, etc. as applied, or as could be applied, in clothes dryers of the types currently manufactured with regard to the risk of fire;

- Determine and conduct necessary testing of products to evaluate dominant ignition scenarios and lint combustion characteristics;

- Prepare a fault tree analysis for use as a standard hazard evaluation tool; and

- Present the FTI findings to the CPSC engineering staff.

2.0 BACKGROUND

It was reported that during 1996, an estimated 15,500 fires were associated with clothes dryers resulting in numerous fatalities, injuries, and millions of dollars of property damage in residential structures (see *Appendix B, reference no. 1*). In 1998, the CPSC initiated a Clothes Dryer Project Study to assess the adequacy of applicable voluntary standards for electric and gas dryers. The results of the CPSC engineering staff's findings were presented in their draft report titled "Report on Electric and Gas Clothes Dryers," dated March 1999, and the basic investigative data referenced represent the basis for a large part of FTI's investigation and analysis.

3.0 INVESTIGATION

3.1 *Documents Reviewed*

FTI conducted a thorough literature search as part of this investigation. Many relevant documents of various types were obtained and reviewed by FTI. These documents included applicable codes and standards (see *Appendix A*), journal and magazine articles, government agency reports, clothes dryer owner's manuals and articles from the Internet. Results of the literature search are included as a bibliography in *Appendix B*.

3.2 *Summary of Documents Reviewed*

FTI reviewed six clothes dryer service/owner's manuals that spanned a period of 31 years from 1967 to 1998 (see *Appendix C*). According to these manuals, prior to 1980, the manufacture of typical gas and electric clothes dryers included thermostats to regulate and limit the operating temperature within a dryer. In earlier models, a single regulating thermostat was affixed to the blower housing. This thermostat maintained the dryer exhaust temperature below 180 degrees Fahrenheit (F). In addition to the regulating thermostats, an automatic-reset high-limit thermostat (set between 225-290 degrees F for electric dryers and 300-350 degrees F for gas dryers) was installed in dryers. The high-limit thermostat is usually located at the heater box air inlet, but has also been located at the top rear of the drum housing. The high-limit thermostat device is referred to in both the UL and the ANSI standards (see *Appendix A*).

During the 1980s, bias-type thermostats were added to the blower housing to afford different (lower) drying temperatures (see *Appendix B, reference no. 23*). Subsequently, the regulating thermostats were either kept in the blower housing or were relocated to the heat source airflow outlet and the drum airflow inlet or outlet.

According to a dryer service manual reviewed, in 1980 the dryer manufacturer installed a thermal fuse (non-re-settable) at the blower exhaust, to minimize the risk

of a thermal run-away of the heat source (see *Appendix B, reference no. 23*). Since then, manufacturers have also installed another fused thermal cutoff device, which is located at the discharge of the heat source (see *Appendix E, Figures 1-4*).

Other recent additions or modifications made by manufacturers for residential clothes dryers include:

- A drive-belt break limit switch, which turns off the dryer when the drum stops rotating as a result of a broken drive belt (see *Appendix A, UL 2158; sections 19.4.2 and 22.5.4*);
- The use of open-type drive motors instead of totally enclosed motors to minimize overheating due to the accumulation of lint on the motor housing (see *Appendix B, reference no. 23*);
- Published guidelines regarding the length and type of the user-installed vent duct system to minimize restricted airflow (see *Appendix B, reference nos. 15, 16, 18, 19, 20, 21, 22, 23, and 24*);
- Electronic control systems including a power resistor[1] located in the control console (see *Appendix B, reference no. 23*); and
- Moisture sensors to adjust the drying time by stopping (cycling) the timer motor (see *Appendix B, reference nos. 20, 21, 22, and 24*).

FTI also evaluated fire incident data found in a selection of previously evaluated CPSC Epidemiological Investigation Reports (EIR). These investigation reports included 79 selected clothes dryer-related fires that occurred between 1993 through 1997, and indicated the general failure modes. The identified dryer fire causes are summarized in Table 1 below:

[1] A load resistor in the dryer control module

Failure Mode	Fire Causation
Electrical	24%
Restricted Airflow	22%
Mechanical	8%
Heat Source	8%
Misuse/Abuse	5%
Undetermined	33%

Table 1. CPSC EIR Clothes Dryer Fire Failure Mode and Cause Data

Other than undetermined failure modes, electrical and restricted airflow appears to have been the most prevalent fire causation modes. A comparison of the various events in each of the general fire causation modes indicates that drum-drive motor failures accounted for 8% of the dryer fires investigated.

Data from the CPSC Epidemiological Investigation Reports indicated that sixty-one of the 79 fires (77%) occurred in occupied homes/buildings. Three of the fires caused a total of 10 fatalities. In thirty-four of the 79 fires (43%), the residents were alerted to the fire by either observing or detecting the odor of smoke. In twelve of the 79 fires (15%), the residents were alerted to the fire by the operation of a smoke detector.

A review of the U. S. Home Product Report regarding residential appliance fires as reported (see *Appendix B, reference no.* 25) between 1992 through 1996 indicates that approximately 3 to 4% of all residential fires in the United States were related to clothes dryers. On average, for each year, 436,900 residential structure fires were reported during this time period, and 14,500 of them involved clothes dryers. According to this report, the ignition factors for these fires are summarized in Table 2 below:

Failure Mode	Fire Causation
Lack of Maintenance	29%
Electrical	20%
Mechanical	20%
Misuse	10%
Undetermined	21%

Table 2. U.S. Home Product Report Clothes Dryer Fire Failure Mode and Cause Data

Although the 79 Epidemiologic Investigation Reports (see *Appendix B, reference no. 14*) and the Home Product Report (see *Appendix B, reference no. 25*) data are not identical, as one would expect, the relative ratios of the two principal failure modes are very similar.

The voluntary standards, UL 2158 and ANSI Z21.5.1, address the functional testing of electric and gas dryers, including regulating and limiting control components, the drum-drive motor and the ventilation system. The functional tests appear to be short term except for a 7-hour continuous pass/fail operation test with various control functions defeated and the airflow restricted. It is obvious for consumer safety reasons that exhaust venting to the outside is only required for gas dryers, but not for electric, because gas dryers produce carbon monoxide. The standards are also in concert with the manufacturers' operating manuals and address the user's responsibility to clean the ventilation system to minimize the potential of lint accumulation and restricted airflow.

Other various file documents reviewed by FTI discuss the effects of restricted airflow within a dryer. Restricted airflow causes the dryer to be controlled only by the high temperature limit device and consequently the heat source will cycle rapidly. The

dryer drum interior temperature actually decreases during this abnormal operational mode due to the cooling segment of the cyclic operation (see *Appendix D, Figures 5 and 6*).

Manufacturers' installation, operating and repair manuals address the importance of the user to frequently clean the lint screen, and periodically clean the vent system and interior of the dryer enclosure (see *Appendix* C). These manuals further warn the user about the potential combustion of lint. Suggested periodic cleaning cycles for the vent system and dryer interior vary from every 1 to 3 years or every 1,000 hours of operation.

The March 1999, CPSC staff draft report concluded that the presence of a restricted airflow detection device would directly address one of the major contributors of dryer fires.

3.3 *FTI Testing*

CPSC provided FTI with two 1998 model clothes dryers (one gas and one electric) for independent inspection and testing. CPSC staff had previously tested these dryers and provided FTI with the test data.

FTI conducted operational and functional tests of various components removed from these two exemplar dryers, including the non-enclosed drum-drive motors, regulating and limiting thermostats, thermal cutoff switches, thermal fuses, and the power resistors from an electronic controller.

A drum-drive motor was electrically tested with a covering of lint and a simulated impeller-end bearing failure that produced a locked-rotor condition. After approximately 50 operations of the motor's thermal protective device it failed in the closed position, and the lint covering on the motor stator ignited. The surface temperature at the stator winding, at the time of ignition, was approximately 500 degrees F.

A thermocouple was placed on the resistors of a bias-type-regulating thermostat and the thermostat was energized. The dryer's temperature setting was varied from Delicate-Low (0 ohms resistance), Knit-Medium (910 ohms resistance) and Normal (6,000 ohms resistance). The maximum surface temperature measured on the resistors for the bias-type-regulating thermostat was approximately 104 degrees F, and there was no ignition of the wiring insulation. The control wiring insulation was rated for 221 degrees F (105 degrees Celcius [C]).

The operational and limiting thermostats and cutoff fuses from the exemplar clothes dryers were thermally tested. Operating temperatures are summarized by the test result sequence as follows:

1. Bias operational thermostat operated at 171 degrees F (electric dryer-blower exhaust)
2. Thermal cutoff fuse operated at 208 degrees F (electric dryer-blower exhaust)
3. High limit thermostat operated at 269 degrees F (electric dryer-heater box)
4. Thermal cutoff fuse operated at 352 degrees F (electric dryer-heater box)
5. Low operational thermostat operated at 127 degrees F (gas dryer-blower exhaust)
6. High operational thermostat operated at 143 degrees F (gas dryer-blower exhaust)
7. High limit thermostat operated at 345 degrees F (gas dryer-heater box)

3.4 *Fault Tree Analysis*

Two fault trees were constructed, one utilizing the general failure mode data summarized from the 79 CPSC Epidemiologic Investigation Reports, Figure No. 7, and the other for the drum-drive motor and restricted airflow failure modes analysis conducted by FTI, Figure No. 8 (see *Appendix E*). The overall predictability of the fault tree analysis was hindered by the limited detail in the causation analysis and lack of empirical data.

4.0 ANALYSIS

Despite the residential clothes dryer manufacturers installation of numerous devices since the 1980s to minimize the potential for gas and electric clothes dryer-related fires, these fires continue representing 3 to 4% of the reported residential fires. The various improvements included drum-drive belt break detection limit switches, redundant regulating thermostats, fused thermal limit detection devices, an audible lint-screen clogging detection device and the change from an enclosed to an open-frame thermally-protected drum-drive motor.

The various fuel loads associated with a dryer include lint, vinyl vent ducts, wiring insulation, including the drum-drive motor insulation, and polymer components, and, of course, the clothing inside the dryer. The drying of improper materials (i.e., foam pillows) is addressed in the manufacturers' manuals reviewed. Lint, with an ignition temperature of approximately 500 degrees F is the only known fuel load variable, and it is a function of dryer usage, user maintenance and servicing. There is very limited information concerning the combustion characteristics of lint as a fuel. The accumulation of lint and its ignition potential is addressed both in the manufacturers' manuals and in the voluntary standards.

Although the CPSC Epidemiological Investigation Reports of 79 dryer fires are not a statistical sample, they indicate that drive motor failures and restricted airflow within the dryer exhaust and vent system account for the majority of the identified electrical and gas dryer fire causes. EIR data indicates that in 15% of these fires the occupants were alerted by the operation of a smoke detector. Data from these reports also indicates that 33% of the clothes dryer fires reported, involved gas dryers rather than electric dryers. A review of Fire Incident Data for 1994 through 1996 (1994-1996 Residential Fire Loss Estimates) (see *Appendix B, reference nos. 1, 2, and 3)* indicated that on average, gas dryer fires accounted for 27% of the residential fires involving dryers. Also, a report provided by CPSC on Manufacturer Data indicated that approximately 24% of all dryers sold are gas dryers (see *Appendix B, reference no. 13)*. This implies that there is an equal chance for a fire occurring in

either a gas or an electric dryer. On average, each year for the five-year period between 1992 through 1996, there were 14,500 residential fires involving clothes dryers (US Home Product Report) (see *Appendix B, reference no. 25*). These findings indicate that additional protective devices or actions are needed to minimize the potential exposure to fires.

The addition of the drum-drive belt break limit switch and the redundant regulating thermostats appear to be positive alterations to minimize the potential of a fire. The installation of the fused thermal device also appears to be a positive alteration; however, the physical location of the fused device varies depending on the manufacturer. To be effective, the fused thermal device should be located at or near the discharge of the heat source and not at the exhaust of the dryer's airflow impeller as found in some of the dryers.

The improper installation of the owner-furnished ventilation system and/or the accumulation of lint can result in obstructions in the dryer exhaust and vent airflow system. These obstructions cause the dryer's airflow to be restricted. This restricted airflow causes rapid cycling of the dryer's energy (heat) source by activation of the heat-source high-limit thermostat device(s), and is not detected by either the regulation thermostats or the thermal fuse limit device(s) as the drum temperature actually decreases during this operating mode. A subsequent failure of the high-limit thermostat can result in the ignition of either the accumulated lint in the airflow system or in the lint screen. The test results indicate that unconditioned lint will auto-ignite at approximately 500 degrees F. The operation of an audible device to detect a clogged lint screen may go undetected by a hearing-impaired user, and in that case will do little to minimize a potential fire hazard of a clogged screen. The installation of either a positive airflow or pressure differential device should be considered by the dryer manufacturers. This device would disable (turn off) the heat sources and warn the operator of a restricted airflow condition. Such devices have been installed in gas dryers, as required by the ANSI standard, to avoid improper

combustion and the resultant toxic gases that would result in the dryer airflow path (see *Appendix A, ANSI Z21.5.1 Section 2.4.5*).

The location of the interconnection between the dryer exhaust and the user's vent system also can result in either a restricted airflow condition or the discharge of potentially combustible lint into the dryer air intake and enclosure. The UL and ANSI Standards and the dryer manufacturers' manuals indicate that only gas dryers require the installation of an exterior venting system as noted previously. Although dryer manufacturers offer, as an option, a fabricated interconnecting or transition device to insure proper venting system installation, this should not be an option. Instead, this should be an integral part of the dryer assembly. This factory-furnished vent transition device would also facilitate the positioning of the dryer in close proximity to a wall while maintaining the integrity of the airflow system. It is, therefore, recommended that exterior venting and a vent transition device be required for all dryers.

Current dryer models utilize an open-frame constructed drum-drive motor with a thermal limit device mounted on the drum-drive pulley end of the motor. This type of design may not afford protection and does not allow for detection of an exhaust-impeller-end motor bearing failure event in time to prevent a lint fire. Furthermore, the utilization of an open frame motor allows the accumulation of lint on the motor from an improperly installed vent system. Overheating of the motor windings and/or a bearing(s) failure can result in the ignition of accumulated lint with the subsequent failure of the motor thermal device. Bench testing of an exemplar drum-drive motor supports this finding. Dryer manufactures recommend that the interior of the dryer be cleaned every 1 to 3 years or after "1,000" hours of operation to minimize the potential for fires. This recommendation could pose potential hazards to the average consumer, and is therefore unacceptable unless done by a qualified repair service. Furthermore, the accumulation of lint or combustible material within a dryer is a function of the individual dryer usage and cannot be quantified as to years or time of usage. In addition, dryers are not furnished with a "running-time"

device. Recommended alterations to minimize the potential of fires caused by the drum-drive motor include: the use of a totally-enclosed fan-cooled (TEFC) motor, and the installation of a thermal device on both bearing housings.

The voluntary standards regarding electric and gas clothes dryers address the functional testing of dryers, including operating devices during short periods of operation. Neither the UL nor the ANSI standards address long term operational testing to determine the effects of lint accumulation over time. The only extended time testing required involves continuous operation for seven hours with a restriction of the airflow and deactivation of protective devices. If the test dryer operates as intended for this time period and/or there is the absence of smoke, it passes the test. The ANSI standard for gas dryers, addresses the need for a gas dryer to meet exhaust parameters for carbon monoxide or the escape of unburned fuel gas during a blocked exhaust condition. The voluntary standards should be amended to require that all dryers be provided with a vent transition assembly and installed with an exterior exhaust system. Further research to address the feasibility of accelerated aging testing for ignition scenarios and combustible components, as well as for the variety of lint found in both electric and gas clothes dryers, would assist in the development of other appropriate voluntary standards requirements.

5.0 CONCLUSIONS

Based upon the foregoing investigation and analysis, and to a reasonable degree of engineering certainty, FTI concludes the following:

1. Despite the various alterations and improvements made to residential electric and gas clothes dryers since the 1980s, they continue to be the cause of 3 to 4 % of all the yearly reported residential fires *(approximately 14,500 dryer-related fires from a total of 436,900 annual residential fires).*

2. The two most likely identified causes of dryer fires are electrical, dominated by malfunction of the drum-drive motor, and restriction of the normal airflow through the dryer.

3. Adequate detection and/or protective devices have not been provided by the manufacturers to minimize the fire potential from malfunctions of the drum-drive motor, or from restricted airflow.

4. The voluntary standards should be revised to require a vent transition assembly and an exterior exhaust system for all clothes dryers.

5. Further evaluation is needed to address the feasibility of accelerated aging testing for fire hazard items found in both electric and gas clothes dryers.

6.0 RECOMMENDATIONS

FTI's recommendations to minimize the causation of residential fires due to electric and gas clothes dryers include the following:

1. The installation of a device(s) to detect restricted airflow through the dryer. The detection device could be either a positive airflow switch or a set of differential pressure detectors at the inlet and discharge of the blower. The detection of a restricted airflow condition should disable (turn off) the heat source, stop the drum-drive motor, and warn the operator.

2. The location of a fused thermal device at the discharge flow side of the heat source.

3. The factory installation of a fabricated vent transition assembly to assure the proper installation of the user's exterior venting system.

4. The installation of thermal limit warning devices on the impeller-end bearing of the drum-drive motor.

5. The use of totally-enclosed-fan-cooled (TEFC) type drum-drive motors.

6. The installation of a smoke detection alarm located in the interior of the control panel. This device would shut off the drum-drive motor and the heat source and at the same time would sound an alarm as to the presence of smoke. (It could also be offered as a fire code change recommendation to place a residential smoke detector above clothes dryers.)

7. The installation of a cumulative running time clock device to provide an audible and visual "service required" indication at the appropriate use interval. This device could only be reset by a qualified dryer serviceman.

8. Further research should be conducted to better define ignition scenario risks and to determine the combustion characteristics of a variety of lint.

Appendix A

Product Standards Index

FEATURE	COMPONENT	UL 2158 ELECTRIC DRYERS	ANSI 21.5.1 GAS DRYERS
Regulating Component – heat source	Operating Thermostat	11 1, 19 1 2, 24 12 1	1 16 2, 2 12 (240F max in drum). 2 14 1 (200F max in exhaust)
Regulating Component – heat source	Hi-Limit Thermostat	11.1, 19.1 2, 22 5 4, 24 12 1	1 16.2, 1.16 3
Limiting Component – heat source	Thermal Fuse	11 1, 19.1 2, 22 5 4, 24.12.1	1 16 2
Limiting Component – heat source	Thermal Cutoff	11 1, 19 1 2, 24.12 1	1.16 2
Limiting Component - motor	Centrifugal Switch	22 5 4, 24.11 2, 24 11.8	A.1.36
Limiting Component - motor	Thermal Protective Device - in motor	22 5.7, 24 7 1, 24 7 3, 24.8 1, 24 8.2	A.2.1.b
Limiting Component - motor	Door Switch		1 2.10
Limiting Component - motor	Belt Break Switch	19 4 2, 22 5 4	
Preventive Maintenance	Internal Lint	7 1 2.10, 7 2.1 1, 7 2.2.4, 7.5.1	
Preventive Maintenance	Lint in Exhaust/Venting System	7 1.2 10, 7 2 1.1, 7 2 2.4, 7 5.1	1.20.2
Installation	Proper / Exhausted Outdoors		preface, 1.22.1.9b
Appropriate Operation	Improper/Combustible Items in Dryer	7.1 2 9, 7.2.1.1, 7 2 2.4	
Operational Testing	Blocked Air Flow	11 10, 19 5.2 (run for 7 hours OR failure)	2.4.4, 2.4.5, 2.13 (no scorching of clothes), 2.14 2 (250F max in exhaust)
Operational Testing	Bypass Temperature Regulation Devices	11.10, 19 1.2 (run for 7 hours OR failure). 19 4.3.	
Operational Testing	Locked Rotor	24 7 3 (run until protective device operates or maximum time of timer or 15 days)	A.2.1. Table A-V

FTI

Appendix B

Bibliography – Clothes Dryer Fire Literature

CLOTHES DRYER BIBLOGRAPHY

1. Ault, K , Singh, H., Smith, L., "1996 Residential Fire Loss Estimates," Consumer Product Safety Commission, 1996

2. Ault, K , Smith, L , "1995 Residential Fire Loss Estimates," Consumer Product Safety Commission, 1995

3. Smith, L., Long, K , "1994 Residential Fire Loss Estimates," Consumer Product Safety Commission, 1994

4. An NFIRS Analysis: "Investigation City Characteristics and Residential Fire Rates," Federal Emergency Management Agency, 27 pages, April 1998

5. Price, T.A., "Appliances as a Fire Cause," *Fire and Arson Investigator*, Vol. 39, No. 3, pp. 30-34, March 1989

6. Underwood, R , Lentini, J , "Appliance Fires: Determining Responsibilities," *Fire and Arson Investigator*, Vol. 39, No. 4, pp. 52-53, June 1989

7. Sanderson, J., "Clothes Dryer Fires," *Fire and Arson Investigator*, Vol. 39, No. 2, pp. 59-60, December 1988

8. Reese, N., Kloock, G., McGuire, M , Brien, D., "Clothes Dryer Fires," *Fire and Arson Investigator*, Vol. 48, No. 4, pp. 17-19, July 1998

9. Sanderson, J.," Clothes' Dryer Fires. Part 1. Special Report," *Fire Findings*, Vol. 4, No. 3, pp. 7-10, Summer 1996

10. Sanderson, J.," Clothes' Dryer Fires. Part 2. Special Report," Fire Findings, Vol. 4, No. 4, pp. 7-11, Fall 1996

11. Sanderson, J., Schudel, D., "Clothes Dryer Lint. Spontaneous Heating Doesn't Occur in Any of 16 Tests," *Fire Findings*, Vol. 6, No. 4, pp. 1-3, Fall 1998 and *Fire and Arson Investigator*, Vol. 49, No. 2, pp. 17-18, January 1999

12. Sanderson, J., "Clothes Dryer Lint· Testing Reaffirms Spontaneous Heating of Lint Is Unlikely. Part 2," *Fire Findings*, Vol. 7, No. 1, pp. 12-14, Winter 1999

13. Kadambi, S., "Clothes Dryer Project: Report on Electric and Gas Clothes Dryers 1999," Consumer Product Safety Commission, Attachment A, B & C, March 1999

14. "CPSC Epidemiologic Investigation Reports," Consumer Product Safety Commission, 79 Investigation Reports on Clothes Dryer Fires, CPSC Form 182, 1993 – 1997

15. *Do-It-Yourself Repair Manual for Kenmore Dryers Gas/Electric, 1984 – 1997*, Sears, Roebuck and Co., 1997

16. *Do-It-Yourself Repair Manual for Whirlpool Gas/Electric Dryers (29 inches wide) 1983 – 1990*, Whirlpool Corporation, 1990

17. "Dryer Settings Require Dryer Controls to Operate Differently," *Fire Findings*, Vol. 4, No. 3, p. 11, Summer 1996

FTI

18. "Electric Clothes Dryers, UL 2158, Standards for Safety," Underwriters Laboratories, 2nd Edition, June 1997

19. "Gas Clothes Dryers, ANSI Z21.5.1, American Gas Association, Vol. I – Type I Clothes Dryers 1995"

20. *GE Dryer Owner's Manual Models. DVLR223ET & DVLR223GT*, GE Corp. 1998

21. *Installation Instructions For Your New Gas Dryer*, GE Corp. 1998

22. *Owner's Manual and Installation Instructions, Kenmore 27 Inch Wide Electric Dryers*, Sears, Roebuck and Co., 1998

23. *Service Manual for Whirlpool Electric Dryers, 1967-1984 Models*, Whirlpool Corporation, 1983

24. *Step-By-Step Repair Manual Plus Preventive Maintenance for General Electric/Hotpoint Dryers*, GE Corp., 1985

25. Rohr, K.D., "US Home Product Report, 1992-1996; Appliances and Equipment," National Fire Protection Association, Quincy, MA , *NFPA Home Product Report*, 84 pages, February, 1999

Items not Obtained

1. Bullerdiek, W.A., Adams, D.E., "Hot Water Investigation of Safety Standards for Flame Fired Furnaces, Hot Water Heaters, Clothes Dryers and Ranges," Calspan Corp., Consumer Product Safety Commission, CPSC/BES/75-05, July 1975

2. "Consumer Product Safety Commission Details Home Fire Hazards," *International Fire Chief*, Vol. 41, No. 10, p. 18-19, 1975

3. Emson, I.C., "Audible Warnings for Fire Appliances," *Institution of Fire Engineers Quarterly*, Vol. 22, No. 45, p. 44-51, May 1962

4. Farrell, D., "Appliances on Fire," *Woman's Day*, Vol. 59, No. 15, p. 59-63, September 17, 1996

5. Fox, L.L., Whittaker, D., "Some Measurements of Temperatures of Metal Flues of Domestic Heating Appliances," *Journal Institution of Heating and Ventilating Engineers*, Vol. 23, pp.183-192, 1995

6. Hilado, C.J., "Small Appliance Factor in Combustion," *American Fire Journal*, Vol. 37, No. 1, p. 14-16, January 1985

7. Hilado, C.J., Huttlinger P.A., "Role of Certain Appliances as Sources of Ignition," *Journal of Consumer Product Flammability*, Vol. 9, No. 2, p. 77-79, June 1982

8. "Selected Articles for Arson Investigators. 1976 Update," *Fire and Arson Investigator*, Update, 1976

9. Itoh, S., "Fire Safety in Japan: Fire Safety Regulations in the Areas: Buildings, Electrical Appliances, Railway Carriages, and Automobile Vehicles," Fire Retardant Chemicals Association. International Opportunities in Fire Retardancy – Regulations – New Developments – Toxicity. Annual Meeting, New Orleans, LA, Fire Retardant Chemicals Assoc., Westport, CT, p. 110-13, March 25-28, 1979

10. Juillerat, E.E., "Clothes Dryers," *Fire Journal*, Vol. 62, No 9, p. 23, September 1968

11. Kixmiller, R.V., "Gas Fired Appliances," *Product Safety in Household Goods*, p 37-41, 1968

12. Morris, D M , "Fires From Gas and Electric Appliances," *Fire and Arson Investigator*, Vol. 25, No. 5, p. 1-3, July-September 1975

13. *Report on Investigation of Gas-Fired Clothes Dryers in Mobile Homes*, Underwriters Laboratory, Inc., Northbrook, IL, Subject 612, 56 pages, May 7, 1971

14. Wright, F., "Planned Preventive Maintenance of Hospital Appliances," *Fire*, Vol. 65, No. 815, p. 619-620, May 1973

CLOTHES DRYER BIBLIOGRAPHY

(Internet Sites)

1. http://www qtm net/firefind/mboard/messages/

   Fire Finding's Investigator Exchange – lots of information regarding fires involving clothes dryers Some information from appliance service repairmen.

2. http://www.aham.org/cf-dbm/plug/plug.cfm
   Association of Home Appliance Manufacturers – bimonthly newsletter

3. http://www.firesafety org/news
   Recent news on fire safety – several European news articles involving dryer fires

4. http://www allstate com/safety/home/fire.html

   Allstate insurance site with lots of helpful home safety tips including appliances. This is just one example of the many insurance company web pages with similar information.

5. http://www.ci.dallas.tx.us/dfd/fs5safc.htm

   Dallas Fire Departmet wep page has helpful information on fire prevention involving appliances. This is just one example of the many fire department web pages with similar information.

6. http://www.kiddesafety com/kiddesafety/pages/homefisa.htm

   Kidde web page - Home Safety Education Center. This is just one example of the many web pages from manufacturers of fire protection equipment with similar information.

7. http://www.goodhousekeeping com/gh/ghi/67ghifl.htm

   Good Housekeeping Institute Report – site with helpful home safety information "Fireproofing Your Dryer"

8. http://tv.cbc.ca/market/recalls/reclhome/dryers.html

   Canadian web page for warnings and recalls – has data on some recalled clothes dryers

9. http://www.discoveromaha com/partners/wowt/onyourside/dryerfires_0225.html
   Television news station web page – has data on fire prevention for clothes dryers. This is just one example of the many tv news web pages with similar information.

10. http://www.buildersbest.com/what.htm
    Distributor of construction equipment web page. This site has a page titled "What Causes Clothes Dryer Fires?" There is lots of helpful information on proper installation and maintenance of clothes dryers.

11. http://www.almetaldryervent.com/main.htm
    This is the web page for a manufacturer of metal dryer exhaust vents. It has some information about problems involving the venting of dryers.

12. http://magic-sweep.com/dryrvent htm This is the web page for a vent cleaning company. It has a section on the hazards of not cleaning your dryer exhaust vent. This is just one example of the many vent cleaning company web pages with similar information

FTI

13. http://pathcom com/~dryerfyr/index html
This is the web page for a Canadian company that cleans dryers and vents, performs safety inspections of home appliances They have some information on fire hazards associated with clothes dryers

14. http.//www cdc gov/niosh/nasd/docs2/ia00100 html
This site if from the extension branch of Iowa State University This web page is titled " "Reduce Fires with Electrical Safety." The article discusses hazards with old/damaged appliance electrical cords and outlets.

15. http://www.gov on ca/OFM/96commun/96-031 htm
This is the web page for a Canadian Fire Marshal's office. The title of the page is "Fire Hazards Associated With Household Clothes Dryers"

16. http://www nadca com/standguide htm
This is the web page for the National Air Duct Cleaners Association. The page has some information on the hazards of contaminated/uncleaned air ducts.

17. http://fris.nist.gov/cgi-bin/starfinder/0?path=firedoc.txt&id=anon&pass=anon&OK=OK
This is the web page for FIREDOC, the research library for NIST Fire Research department. It is very useful in locating references for articles involving fire issues.

Appendix C

Comparison Matrix of Dryer Features –
Service and Operating Dryer Manuals

Comparison of Dryer Features -- Service and Operating Dryer Manuals

Source	Gas or Electric	Maximum Temperature Setting (F)	Thermostat Type	Location	Power Resistor	Belt Break Switch	Preventive Maintenance
Brand A (1967 - 1984)	Electric	145 - 165	adjustable	Blower Exhaust	present at least since 1972 and Temp <= 150 F	none	after 1000 hours of operation
Brand A (1967 - 1984)	Electric	125 - 180	operating	Blower Exhaust	present at least since 1972 and Temp <= 150 F	none	after 1000 hours of operation
Brand A (1967 - 1984)	Electric	155 - 175	Bias since 1984	Blower Exhaust	present at least since 1972 and Temp <= 150 F	none	after 1000 hours of operation
Brand A (1967 - 1984)	Electric	290 (older dryers)	hi-limit	Heater Box Air Intake	present at least since 1972 and Temp <= 150 F	none	after 1000 hours of operation
Brand A (1967 - 1984)	Electric	250 (1984 or newer)	hi-limit	Heater Box Air Intake	present at least since 1972 and Temp <= 150 F	none	after 1000 hours of operation
Brand A (1967 - 1984)	Electric	190	Thermal fuse (one-shot) since 6/80	Blower Exhaust	present at least since 1972 and Temp <= 150 F	none	after 1000 hours of operation
Brand A (1983 - 1990)	Both	180	adjustable	Blower Exhaust	in control panel	none	after 1000 hours of operation
Brand A (1983 - 1990)	Both	180	operating	Blower Exhaust	in control panel	none	after 1000 hours of operation
Brand A (1983 - 1990)	Both	180	bias	Blower Exhaust	in control panel	none	after 1000 hours of operation

Comparison of Dryer Features -- Service and Operating Dryer Manuals

Source	Gas or Electric	Maximum Temperature Setting (F)	Thermostat Type	Location	Power Resistor	Belt Break Switch	Preventive Maintenance
Brand A (1983 - 1990)	Electric	225	hi-limit	Heater Box Air Intake	in control panel	none	after 1000 hours of operation
Brand A (1983 - 1990)	Gas	300	hi-limit	not mentioned	in control panel	none	after 1000 hours of operation
Brand A (1983 - 1990)	Both	not mentioned	Thermal Fuse (one shot)	Blower Exhaust	in control panel	none	after 1000 hours of operation
Brand A (1983 - 1990)	Both	not mentioned	Thermal Cutoff (one-shot)	Heater Box Air Exhaust	in control panel	none	after 1000 hours of operation
Brand B (1984 - 1997)	Both	180	adjustable	Blower Exhaust	in control panel	none	every 2-3 years or more often depending on usage
Brand B (1984 - 1997)	Both	180	operating	Blower Exhaust	in control panel	none	every 2-3 years or more often depending on usage
Brand B (1984 - 1997)	Both	180	bias	Blower Exhaust	in control panel	none	every 2-3 years or more often depending on usage
Brand B (1984 - 1997)	Electric	225	hi-limit	Heater Box Air Intake	in control panel	none	every 2-3 years or more often depending on usage
Brand B (1984 - 1997)	Gas	300	hi-limit	not mentioned	in control panel	none	every 2-3 years or more often depending on usage

Comparison of Dryer Features -- Service and Operating Dryer Manuals

Source	Gas or Electric	Maximum Temperature Setting (F)	Thermostat Type	Location	Power Resistor	Belt Break Switch	Preventive Maintenance
Brand B (1984 - 1997)	Both	not mentioned	Thermal Fuse (one shot)	Blower Exhaust	in control panel	none	every 2-3 years or more often depending on usage
Brand B (1984 - 1997)	Both	not mentioned	Thermal Cutoff (one-shot)	Heater Box Air exhaust	in control panel	none	every 2-3 years or more often depending on usage
Brand C (1985)	Electric	not mentioned	operating	Blower Exhaust or By Lint Screen On Door	in control panel	none	yearly
Brand C (1985)	Electric	not mentioned	hi-limit	Top Rear of Drum Casing For Heaters at Rear of Drum	in control panel	none	yearly
Brand C (1985)	Electric	not mentioned	hi-limit	Heater Box for Floor Coil Heaters	in control panel	none	yearly
Brand C (1985)	Gas	not mentioned	operating	Blower Exhaust or Drum Outlet or Blower Housing or Drum Inlet	in control panel	none	yearly

Comparison of Dryer Features -- Service and Operating Dryer Manuals

Source	Gas or Electric	Maximum Temperature Setting (F)	Thermostat Type	Location	Power Resistor	Belt Break Switch	Preventive Maintenance
Brand C (1985)	Gas	not mentioned	hi-limit	Heater Box Air Exhaust or Heater Box Air Inlet	in control panel	none	yearly
Brand D (1998)	Electric	171	bias	Blower Exhaust	in control panel	yes	every 2-3 years or more often depending on usage
Brand D (1998)	Electric	269	hi-limit	Heater Box Air Intake	in control panel	yes	every 2-3 years or more often depending on usage
Brand D (1998)	Electric	208	Thermal Fuse (one shot)	Blower Exhaust	in control panel	yes	every 2-3 years or more often depending on usage
Brand D (1998)	Electric	352	Thermal Cutoff (one-shot)	Heater Box Air Intake	in control panel	yes	every 2-3 years or more often depending on usage
Brand E (1998)	Gas	127 or 143	operating	Blower Exhaust	in control panel	yes	every 3 years for lint and every year for exhaust system
Brand E (1998)	Gas	345	hi-limit	Heater Box Exhaust	in control panel	yes	every 3 years for lint and every year for exhaust system

Appendix D

Comparison of Dryer Features –
Figures 1 - 6

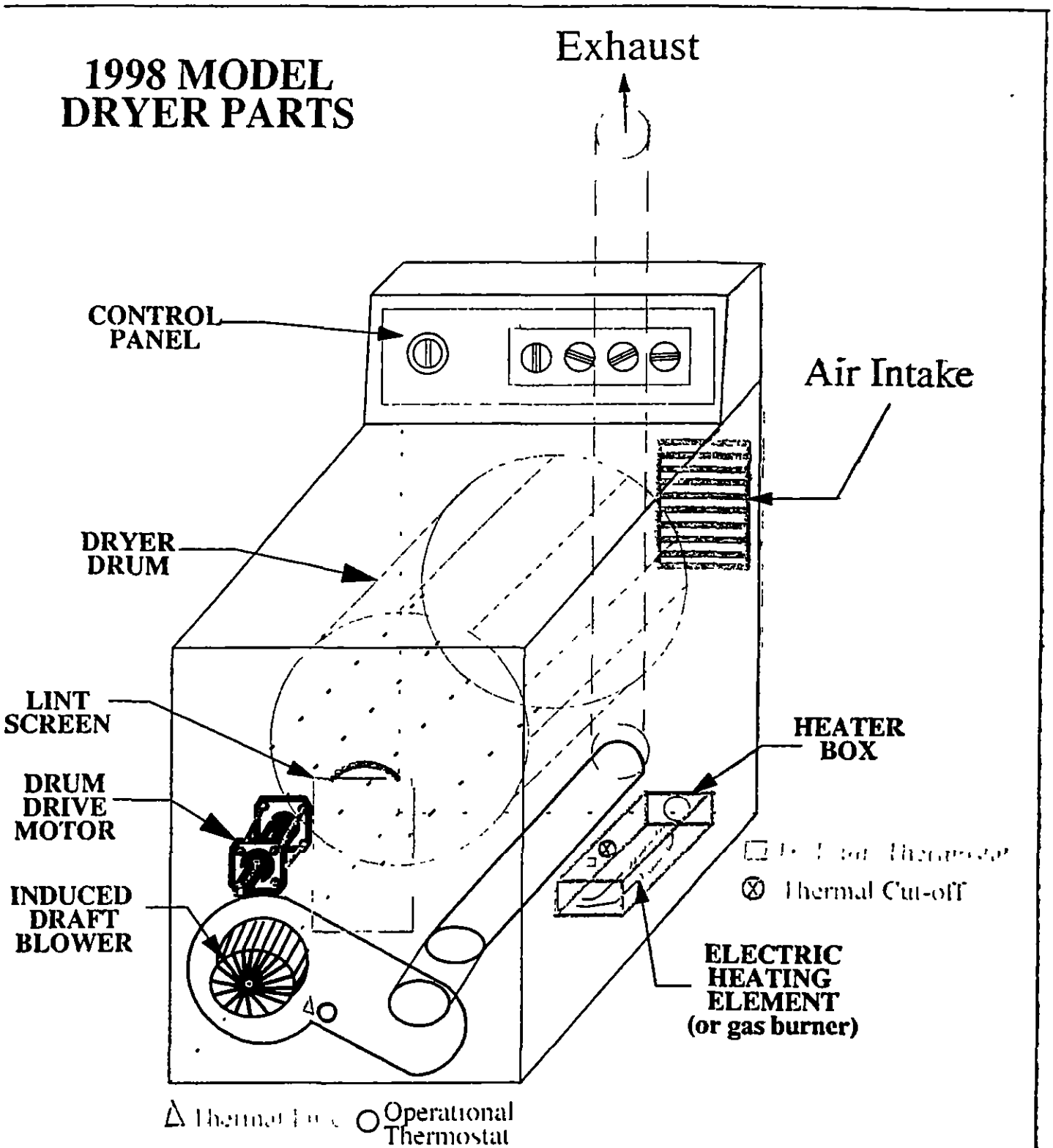

'e Name: Analysis of Clothes Dryer Fires
awing Title: 1998 Typical Model Clothes Dryer - Parts

ure Number: 1 *Drawn by: N.M.* *Date: 11/16/99* *File Number: 9903.0002*

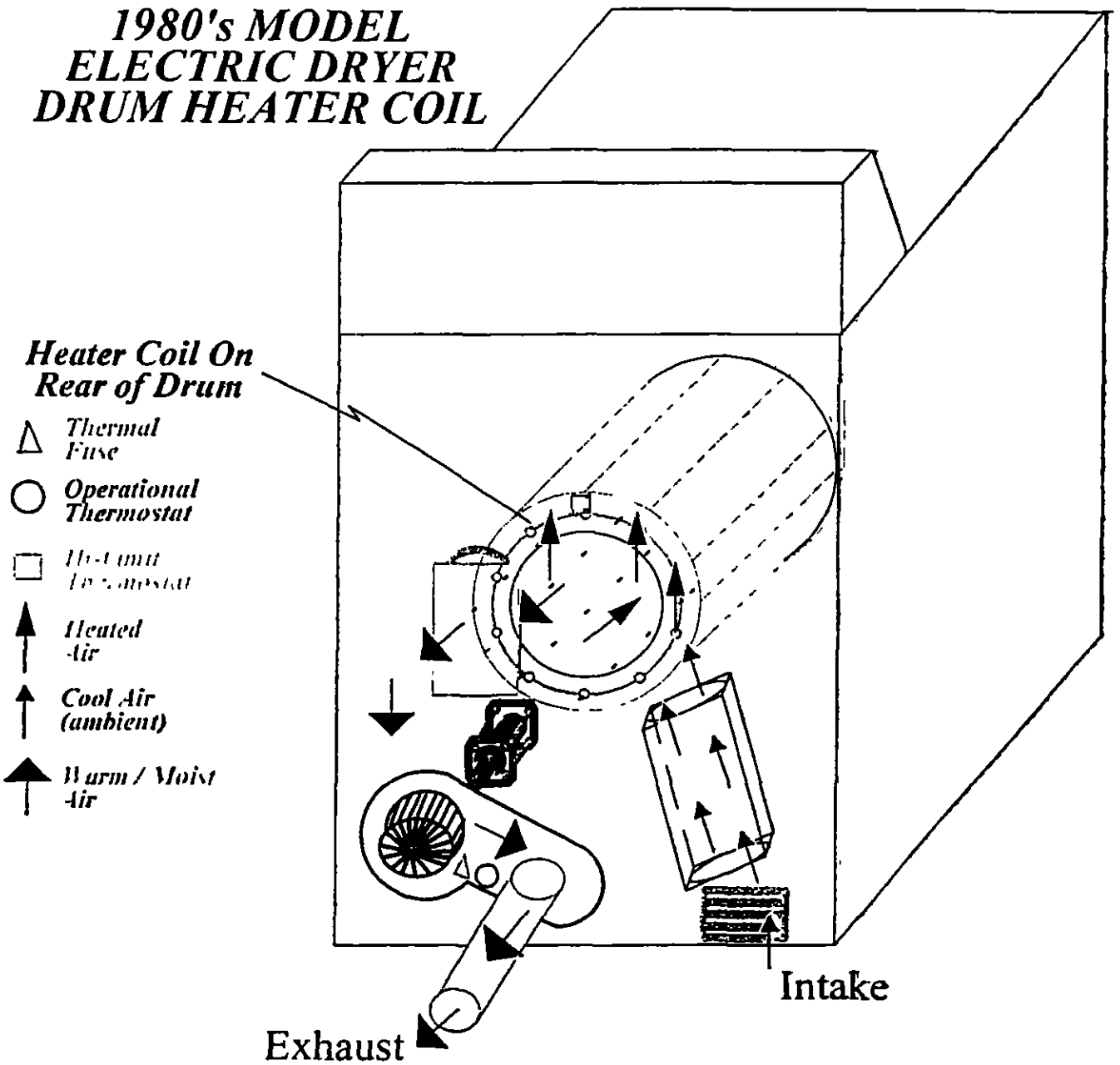

File Name: Analysis of Clothes Dryer Fires
Drawing Title: Typical Older Model Clothes Dryer - Heater Coil on Drum

Figure Number: 2 Drawn by: N.M. Date. 11/16/99 File Number: 9903.0002

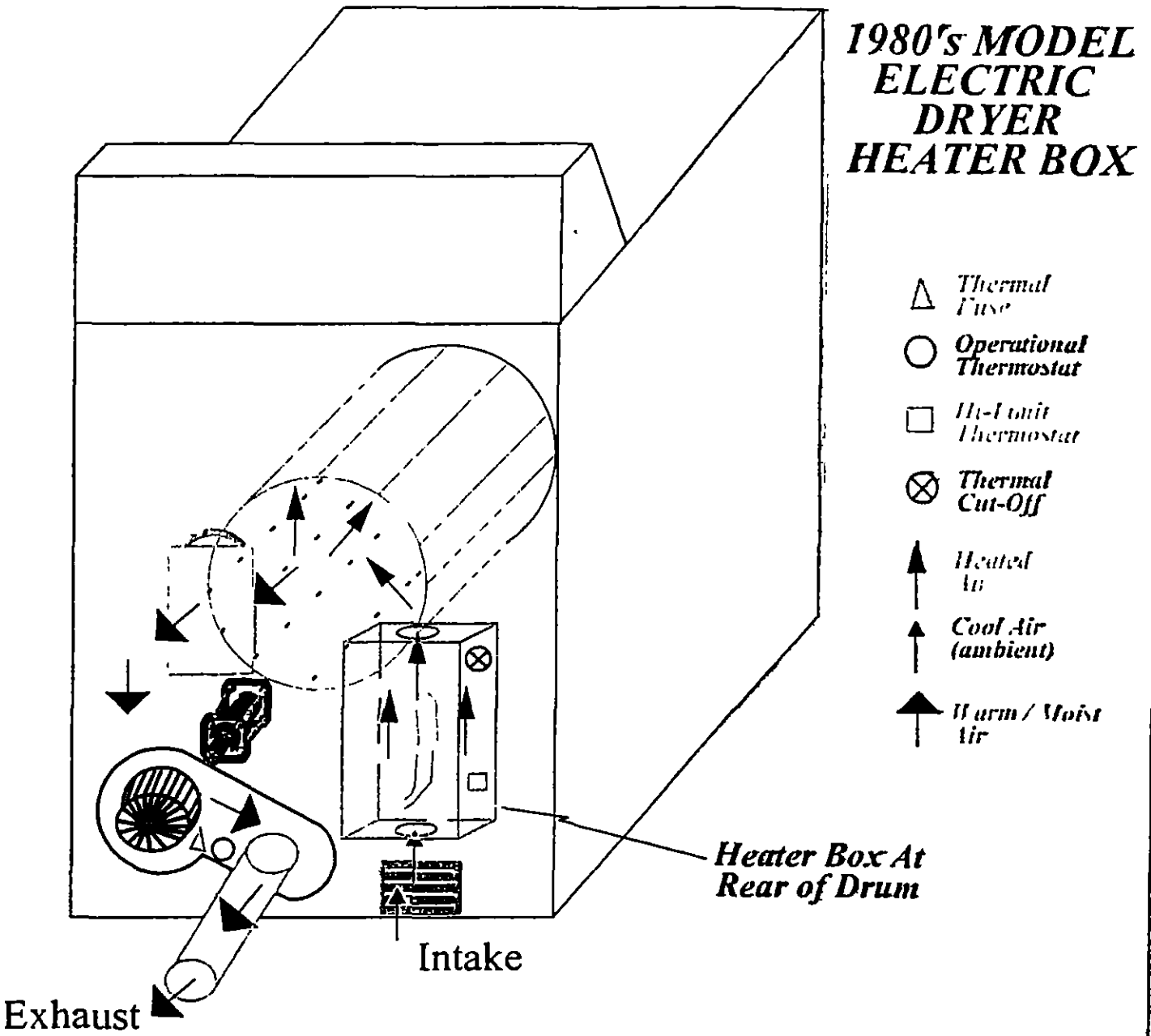

File Name: Analysis of Clothes Dryer Fires
Drawing Title: Typical Older Model Clothes Dryer - Heater Box at Rear

Figure Number: 3 Drawn by: N.M. Date: 11/16/99 File Number: 9903.0002

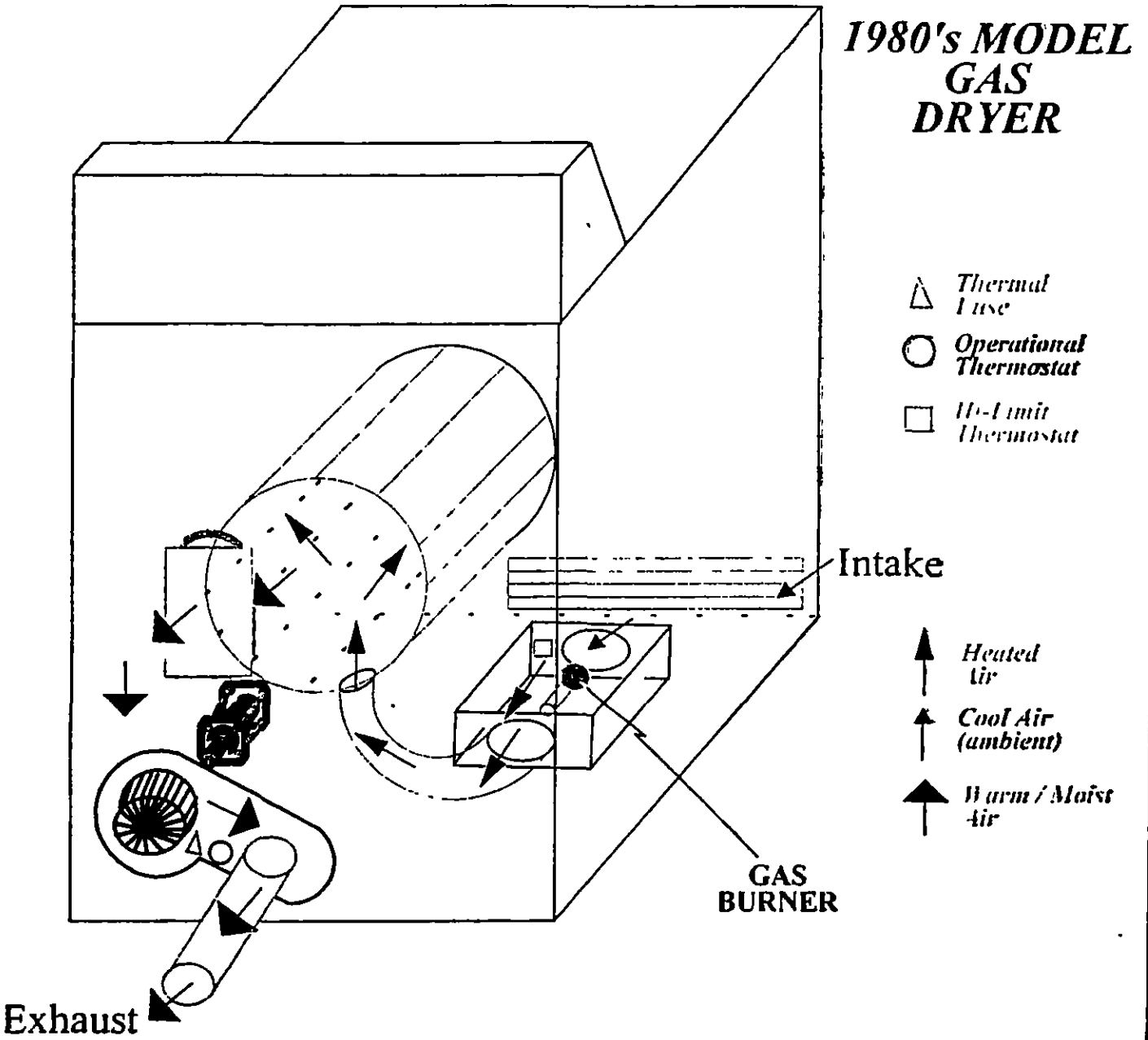

'ile Name: Analysis of Clothes Dryer Fires
'rawing Title: Typical Older Model Clothes Dryer -
Gas Burner On Bottom

FTI Consulting

igure Number: 4 *Drawn by. N.M.* *Date: 11/16/99* *File Number: 9903.0002*

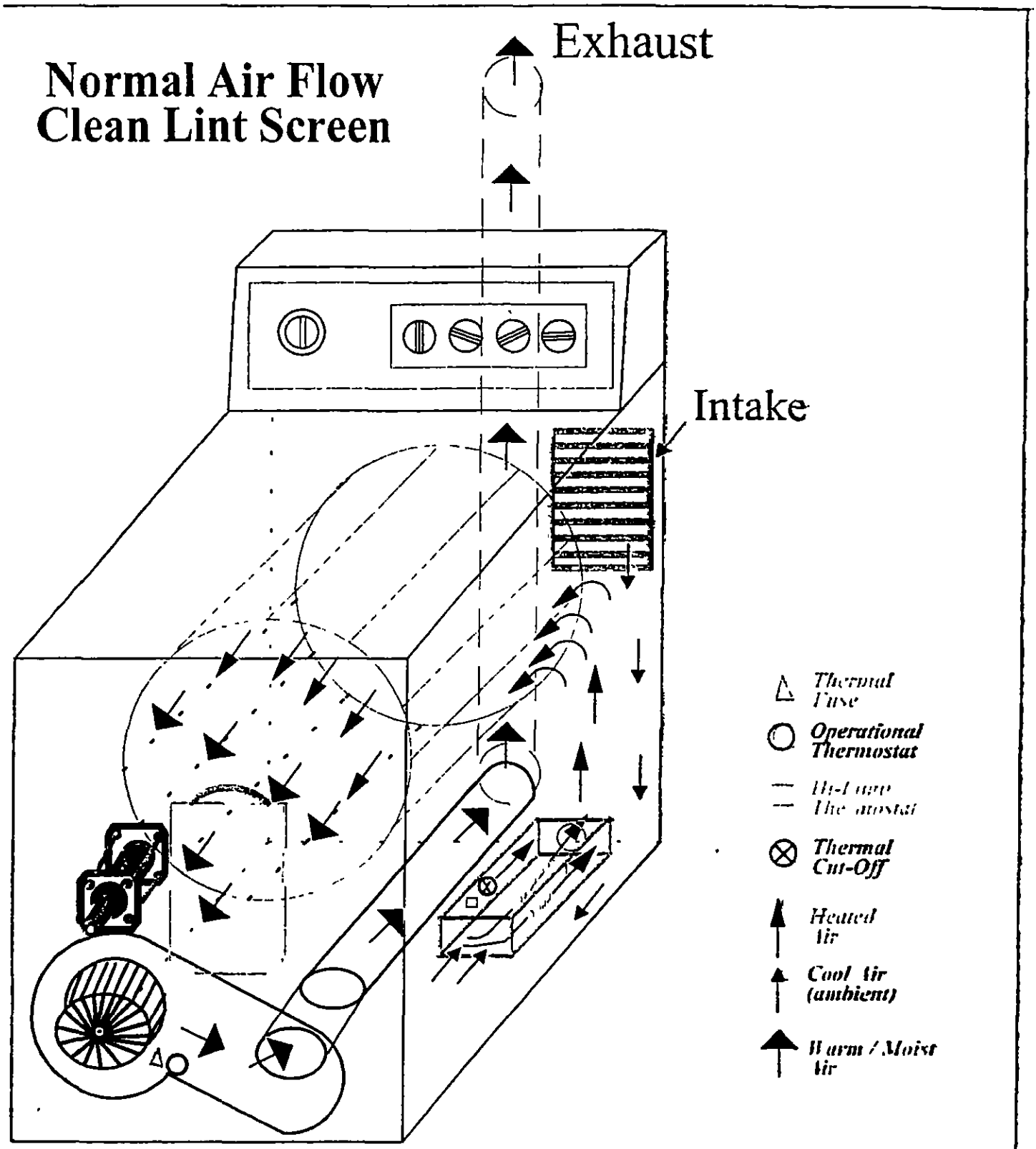

ile Name: Analysis of Clothes Dryer Fires
rawing Title: 1998 Typical Clothes Dryer - Normal Air Flow Pattern

gure Number: 5 *Drawn by: N.M.* *Date: 11/16/99* *File Number: 9903.0002*

Restricted Air Flow
Blocked Lint Screen

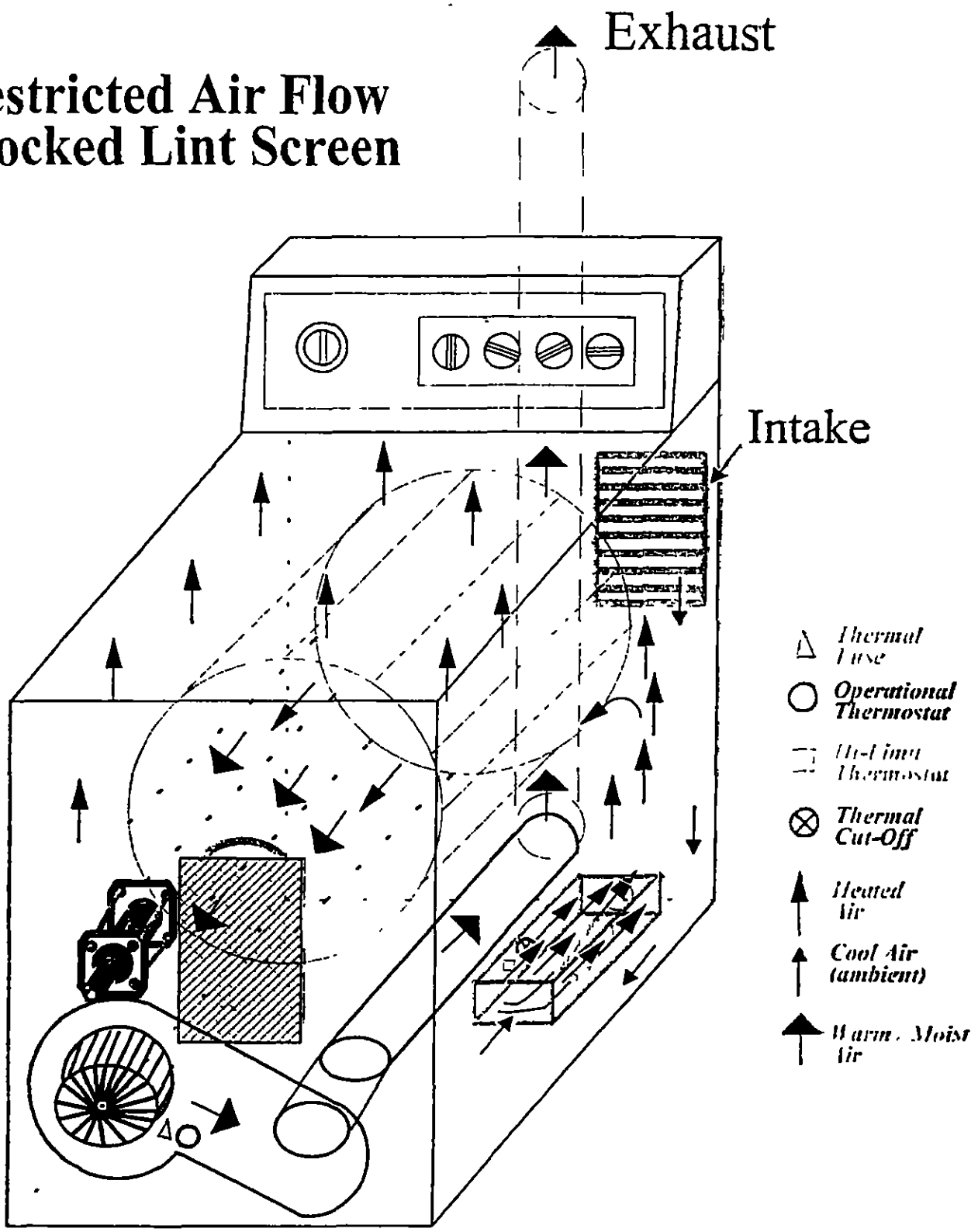

le Name. Analysis of Clothes Dryer Fires
awing Title: 1998 Typical Clothes Dryer - Restricted Air Flow Pattern

gure Number. 6 *Drawn by: N.M.* *Date: 11/16/99* *File Number. 9903.0002*

Appendix E

Fault Tree – Figures 7 and 8
And Supporting Data

CONSUMER PRODUCT SAFETY COMMISSION
CLOTHES DRYER FAULT TREE ANALYSIS

(Data from 79 CPSC Epidemiologic Investigation Reports)

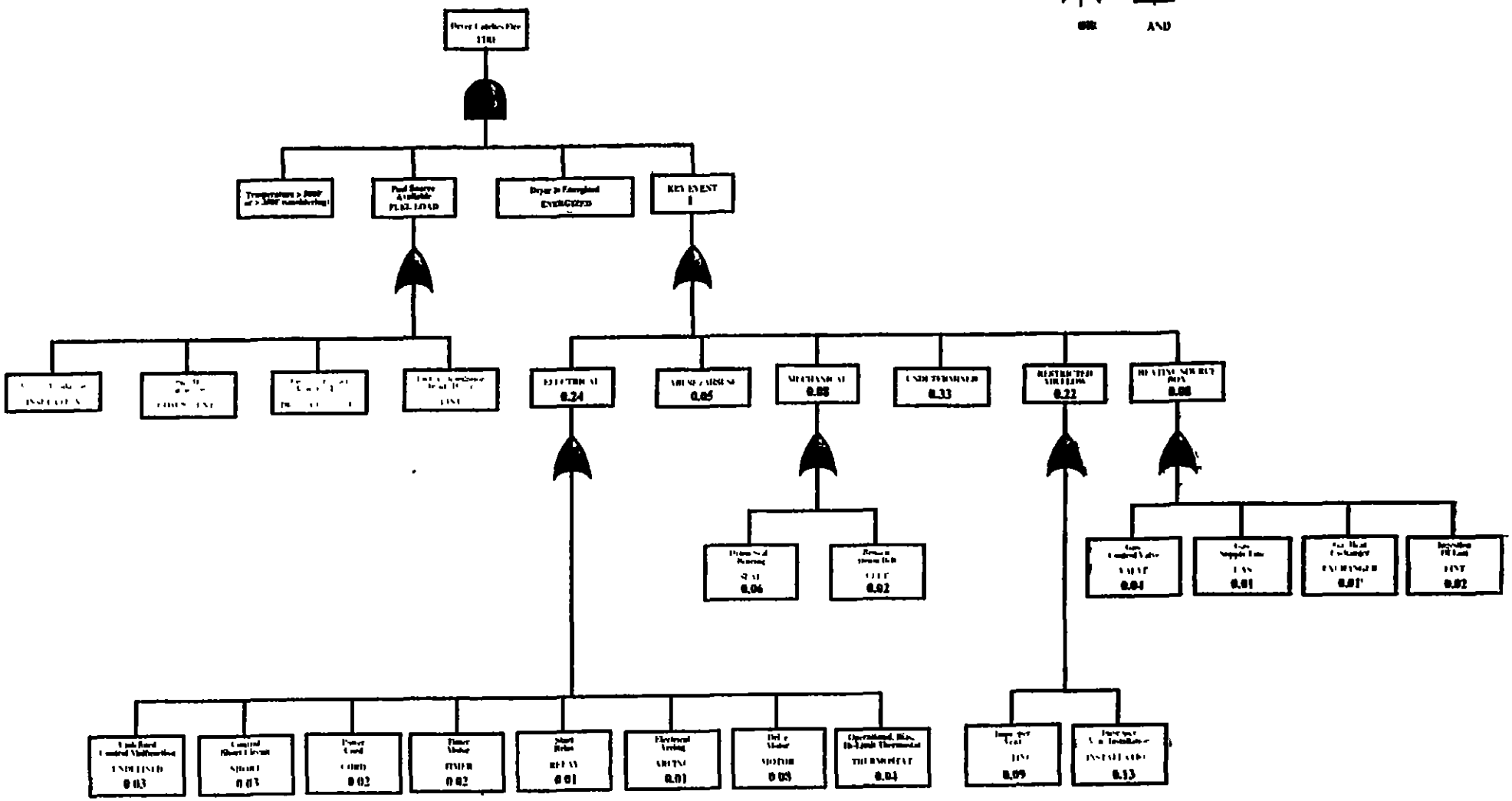

File Name: Analysis of Clothes Dryer Fires

Figure Number 7 *Drawn by. N.M Date. 11/16/99* ***File Number: 9903.0002*** FTI Consulting

FTI CLOTHES DRYER FAULT TREE ANALYSIS

(Data from FTI's report: Engineering Analysis Of Gas And Electric Clothes Dryer Fires)

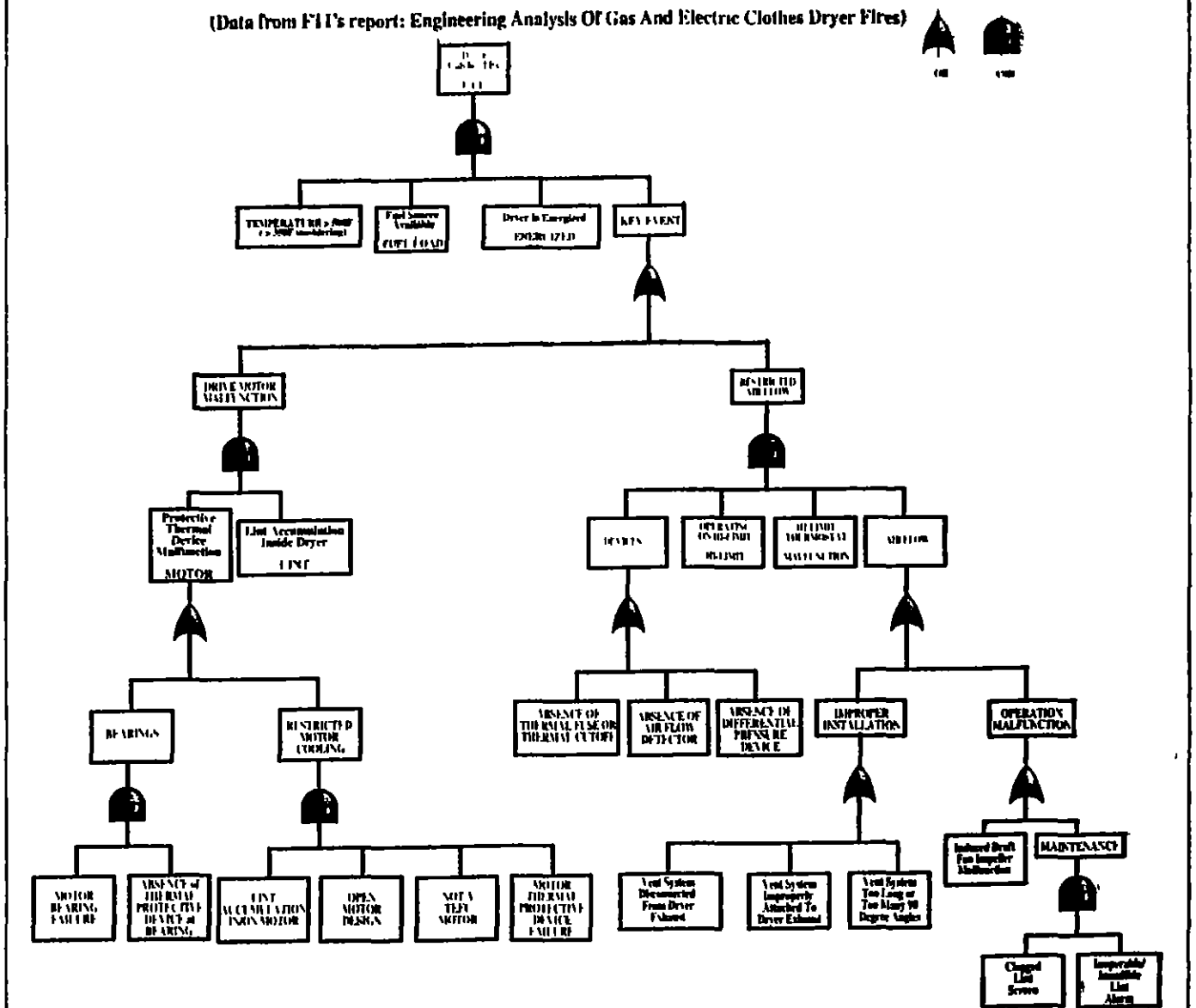

File Name Analysis of Clothes Dryer Fires

Figure Number 8 *Drawn by N M Date 11/16/99* *File Number 9903 0002*

EVENT SUMMARY
FOR FIGURE 7 FROM
CPSC EPIDEMIOLOGIC INVESTIGATION REPORTS
OF 79 FIRES

Failure Mode	Number of Events	Fire Causation Contribution
ELECTRICAL		
1. Undefined control malfunction	2	
2. Control short circuit	2	
3. Power Cord	2	
4. Timer motor	2	
5. Start relay	1	
6. Arcing	1	
7. Drive motor	6	
8. Thermostat	3	
Subtotal	19	24%
MECHANICAL		
1. Drum seal bearing	5	
2. Broken drum belt	1	
Subtotal	6	8%
RESTRICTED AIRFLOW		
1. Improper venting	7	
2. Improper installation of vent	10	
Subtotal	17	22%
HEAT SOURCE (ELECTRIC/GAS)		
1. Gas control valve	3	
2. Gas supply line	1	
3. Heat exchanger (gas)	1	
4. Lint ingestion	2	
Subtotal	7	8%
MISUSE/ABUSE		
1. Events	4	5%
UNDETERMINED		
1. Events	26	33%
Total	79	100%