TAB D

UNITED STATES
CONSUMER PRODUCT SAFETY COMMISSION
WASHINGTON, DC 20207

Memorandum

Date: June 19, 2000

TO : Patricia Hackett
Directorate for Engineering Sciences
Division of Mechanical Engineering

THROUGH: David Walden DAW
AED - Directorate for Engineering Sciences

Nick Marchica NVM
Director - Division of Mechanical Engineering

FROM : Scott Heh SH
Mechanical Engineer
Directorate for Engineering Sciences

SUBJECT : Portable Bed Rails - Voluntary Standards Activities

Background

The U.S. Consumer Product Safety Commission (CPSC) has records of 12 fatalities associated with portable bed rails that occurred between January 1990 and March 14, 2000. In eight of these incidents, the child became entrapped between the bed rail and the mattress. Two head/neck entrapments occurred between the bed rail and the bed end-structure. One incident, a 7-month-old slipped through the bars of the bed rail. In the remaining incident, a 15-month-old child died when he hung by his shirt collar that caught on a tab on the outer side of the bed rail. The age of the victims in the fatal incidents range from 3 months to 4 years.

In February 1998, the CPSC staff first requested that ASTM develop a provisional standard for portable bed rails to address the hazard of entrapment-related deaths associated with these products. In May 1999, the CPSC staff submitted a draft proposed performance standard for Subcommittee review. As of April 2000, the ASTM Portable Bed Rail Subcommittee has not balloted a proposed performance standard for these products. While the Subcommittee has expressed a willingness to continue work on a performance standard, it has not been able to reach agreement on a draft standard (including the CPSC staff proposed standard) so that it may be sent to ballot. The next Subcommittee meeting is scheduled for October 2000. The Subcommittee Chairman recommended a working group phone conference prior to the full Subcommittee meeting so that work on a performance standard can continue. The phone conference is not yet scheduled.

The Subcommittee did agree to ballot a proposed standard for portable bed rail labeling and instructions. This proposed standard went to ballot in January 2000. The Subcommittee reviewed ballot results at a meeting in February 2000 and made revisions to the proposed labeling standard. A revised labeling and instructions standard is scheduled for reballot concurrently at the main and subcommittee levels by May 2000. A summary of ASTM activities associated with portable bed rails is in Attachment A.

CPSC Staff Proposed Performance Tests Addressing Entrapment Hazards and Reasons for Manufacturers' Reluctance to Ballot the CPSC Staff Proposal

In order to reduce the risk of a child slipping through an opening torso first and getting caught at the head, any accessible opening of an installed bed rail should be smaller than the torso dimensions of the smallest user. Further, any openings that could be formed between the bed rail and mattress during reasonably foreseeable use should also be small enough to prevent an infant's torso from slipping into the gap.

The key elements of the CPSC staff proposed standard involve the use of a test probe that is based on the torso dimensions (hip depth and lower torso breadth) of a 3-4 month old infant. The proposed standard specifies that there be no gap in an installed bed rail that allows passage of the test probe. The proposed standard also calls for a 50-lbf force to be applied in an outward direction on an installed bed rail This force is based on strength measurements of five-year-old children. While the 50-lbf force is applied, the test probe is used to check any gaps that form between the bed rail and mattress. If a gap allows passage of the probe, the bed rail fails to meet the standard.

Several manufacturer members of the Subcommittee believe that the proposed CPSC requirements are too severe and lack adequate rationale. Manufacturers intend that portable bed rails are for children who can get in and out of an adult bed unassisted (typically beginning at about 2 years of age) and are not intended to be used with infants. Some manufacturers contend that incidents involving infants represent a misuse of the product and that standard requirements should not be based on these cases. Further, some Subcommittee members contend that the resulting performance criteria are unreasonably severe when the anthropometric data of infants and the strength data for five-year-olds are combined.

The CPSC staff agrees that portable bed rails on adult beds should not be used in place of a crib when placing infants down to sleep. However, the staff believes that given the incident data, it is apparent that use of portable bed rails with infants is reasonably foreseeable. It is therefore appropriate to base performance requirements on infant anthropometry. Further, the CPSC staff believes that it is necessary to combine anthropometric data for a 3-month-old with the strength capabilities of older users in order to achieve an adequate factor of safety to sufficiently reduce the risk of entrapment-related fatalities.

One of the primary concerns expressed by manufacturer members of the Subcommittee is that the adoption of the CPSC staff proposed standard could result in

bed rail designs that present a risk of entrapment equal to or greater than current bed rails on the market. The basis for their concern is that new bed rails designed to meet the CPSC staff draft requirements would be more complex than current designs The increased complexity could increase the possibility that consumers will install them incorrectly or perhaps make modifications to the bed rails. Either action could defeat the safety features on the bed rail, and increase the possibility of entrapment. Manufacturers reinforced this message at the most recent Subcommittee meeting held at CPSC offices on April 12, 2000.

At the Subcommittee meeting, the group discussed various bed rail design concepts that could possibly conform to the CPSC staff draft test requirements. One idea included a bed rail that would have an anchor to the opposite side of the bed so as to prevent the unit from sliding out away from the mattress on the "rail side" of the bed. Two anchor designs were mentioned. One anchor was formed from the bed rail tubing that slides between the mattress and box springs. At the opposite side of the bed, the tubing bends 90 degrees downward so that it hooks around the edge of the box spring. A second anchor concept was a large disk that would be positioned at the opposite side of the bed and pulled up snug against portions of the mattress and box spring.

The Subcommittee also discussed a portable bed rail concept design that was developed by the CPSC Engineering Laboratory (LSE). The LSE concept places the bed rail on top of the mattress instead of, as is typical, next to the mattress Placing the rail on top of the mattress eliminates a gap that might exist between the bed rail and the side of the mattress. A triangular shape was selected for the main body of the bed rail The inclined slope faces toward the inside of the bed. The rail is attached to the mattress by a framework made of ¾-inch (19-mm) hollow tubing similar to that used in many designs of current model portable bed rails. The tubing extends under the mattress and has three cross members made of the same tubing. Both the bed rail base and the framework have non-slip abrasive tape applied to their surfaces. The bed rail is secured to the framework via U-shaped clamps. To install the bed rail, the user pushes downward on the triangular rail (into the mattress surface) and tightens the "U"-shaped clamps on the vertical tube supports. In this way, the bed rail clamps to the mattress, creating substantial resistance to displacement forces.

Some Subcommittee members stated that there are likely several design concepts for which a hazardous gap will not be created when the bed rail is subjected to specified loading conditions. However, such a requirement will not necessarily eliminate the potential for an entrapment fatality. This is especially the case if the product is designed in such a way that misuse or improper installation is a foreseeable occurrence. For example, a consumer could install a bed rail and not push it snug against the mattress such that there is a hazardous gap between the mattress and rail at the time of use. If the force required to move the bed rail is 50-lbf, then entrapment may be more likely since the bed rail may not shift any further outwards when a child falls into the pre-existing gap. Therefore, proper and easy installation must be considered as part of any new design.

In summary, portable bed rails must meet the following criteria in order to reduce the risk of entrapment. 1) they shall be capable of being properly installed on a wide variety of bed and mattress types, 2) they shall be designed to minimize the potential for incorrect installation that could result in hazardous spaces between the bed rail and mattress; and 3) when properly installed, they shall resist movement by a young child that would create an entrapment hazard.

ATTACHMENT A

Summary of ASTM Activities Associated with Portable Bed Rails

Feb 98	CPSC staff requests that ASTM develop a provisional standard and ASTM F-15 Executive Committee endorses CPSC request.
March 98	Juvenile Products Manufacturer Association (JPMA) holds conference call with manufacturers to discuss incident data and the need for a safety standard.
Feb. 1999	CPSC staff attended an ASTM organizational meeting for portable bedrails.
May 1999	CPSC staff developed and sent a draft proposed bed rail standard to the ASTM Working Group for review.
July 1999	During an industry teleconference, manufacturers agreed to test their products to the CPSC proposal and bring results to the next meeting
Sept. 1999	Portable Bed Rail Subcommittee held a meeting and voted to form two task groups. One group would develop labeling and instruction requirements for bed rails and submit these requirements for ballot as soon as possible. The second task group would work on bed rail performance requirements. Once completed, performance requirements would be sent to ballot for addition to the standard for labeling and instructions.
Dec. 1999	CPSC staff met with members of the Subcommittee at the CPSC Engineering Laboratory to discuss the draft proposed performance standard and to observe bed rail design concepts that may address entrapment hazards. A few subcommittee members explained why they believed the CPSC staff proposed requirements and rationale are inappropriate.
Jan. 2000	CPSC staff participated in a teleconference with members of the Bed Rail Subcommittee to discuss bed rail manufacturers' test results and to discuss the items of disagreement in the proposed CPSC draft standard. Some manufacturers said that their products did not meet the proposed requirements. Other manufacturers said they had not yet tested their products but they would guess that they also would not pass the test. The attendees agreed to submit the CPSC draft proposed standard for Subcommittee ballot so that the entire Subcommittee membership could vote and provide written comments on the proposed requirements.
Jan. 2000	ASTM balloted concurrently at the Main Committee and Subcommittee levels a proposed new standard for labeling and instruction requirements for portable bed rails.
Feb. 2000	At a Subcommittee meeting, the attendees reviewed the ballot on a proposed labeling and instruction standard. Revisions were made to the draft standard and it was scheduled for another ballot by May 2000. The Subcommittee members voted to withdraw a ballot containing CPSC staff proposed performance requirements. The reasons given for withdrawing the standard were that it would receive several negative votes and that certain issues should be resolved before performance requirements are balloted. The Subcommittee suggested another meeting at the CPSC so that manufacturers and other members can explain their concerns.

April 2000 Portable Bed Rail Subcommittee meeting at the CPSC offices where manufacturers and other Subcommittee members expressed their concerns about balloting the CPSC staff draft standard.

TAB E

STANDARD CONSUMER SAFETY SPECIFICATION FOR BED RAILS

INTRODUCTION

This consumer safety specification addresses bed rail incidents that were identified by the U.S. Consumer Product Safety Commission (CPSC).

In response to incident data supplied by the CPSC, this consumer safety specification attempts to minimize the following: 1) entrapment in openings in the structure of bed rails, and 2) entrapment between the bed rail and mattress. Entrapment of a child by the head can result in asphyxiation.

This consumer safety specification is written within the current state-of-the-art technology and will be updated whenever substantive information becomes available that necessitates additional requirements or justifies a revision to existing requirements.

1. Scope

1.1 This consumer safety specification establishes requirements for the design and performance of bed rails. It also contains requirements for labeling and instructional material.

1.2 This consumer safety specification is intended to minimize incidents to children resulting from normal use and reasonably foreseeable misuse of bed rails.

1.3 For the purpose of this consumer safety specification, a bed rail is a portable rail intended to be installed on an adult bed to prevent children from 2 years to 5 years of age from falling from the bed.

Rationale for age range: CPSC staff recommends that infants never be placed in an adult bed. Since portable bed rails are intended for use on adult beds, CPSC staff recommends that bed rails be intended and labeled for use by children ages 2 to 5 years.

While the intended age user is 2 to 5 years, staff believes the performance requirements should be based on anthropometric and strength data for children ranging from 3 months to 5 years of age. This is based on the available incident

data related to portable bed rails and is discussed further below

1.4 The values stated in inch-pound units are to be regarded as the standard. The SI values given in parentheses are for information only.

1.5 The following precautionary caveat pertains only to the test methods portion in Section 7 of this specification: *This standard does not purport to address all of the safety problems associated with its use It is the responsibility of the user of this standard to establish appropriate safety and health practices and determine the applicability of regulatory limitations prior to use*

2. Referenced Documents

2.1 *Federal Standards*

16 CFR Part 1500 - Federal Hazardous Substances Act Regulations, including Sections:

1500 48 - Technical Requirements for Determining a Sharp Point in Toys and Other Articles Intended for Use by Children Under 8 Years of Age,

1500.49 - Technical Requirements for Determining a Sharp Metal or Glass Edge in Toys and Other Articles Intended for Children Under 8 Years of Age,

16 CFR Part 1501 - Method for Identifying Toys and Other Articles Intended for Use by Children Under 3 Years of Age Which Present Choking, Aspiration or Ingestion Hazards Because of Small Parts.

16 CFR Part 1303 - Ban of Lead-Containing Paint and Certain Consumer Products Bearing Lead-Containing Paint;

2.2 *Other Standards*

3. Terminology

3.1 *Description of Terms Specific to This Standard:*

3.1.1 *arm, n - for the purpose of this specification,* a device(s) attached to a bed rail that extends between the mattress and mattress foundation and is intended to secure the bed rail to the bed.

3.1.2 *bed rail, n* - a portable railing installed on the side of an adult bed which is intended to keep a child from falling out of bed.

3.1.3 *permanent, adj* - a marking or label shall be considered permanent if, during an attempt to manually remove it without the aid of tools or solvents, it cannot be removed, or it tears upon removal, or such action damages the surface to which it is attached.

4. General Requirements

4.1 *Wood Parts,* shall be smoothly finished and free from splinters.

4.2 *Federal Regulations* - Bed rails shall conform to the following Federal regulations:

- 16 CFR Part 1303 Ban of Lead-Containing Paint and Certain Consumer Products Bearing Lead-Containing Paint,
- 16 CFR Part 1500 Federal Hazardous Substances Act Regulations, including:
  - Section 1500.48 Technical Requirements for Determining a Sharp Point in Toys and Other Articles Intended for Use by Children Under 8 Years of Age;
  - Section 1500.49 Technical Requirements for Determining a Sharp Metal or Glass Edge in Toys and Other Articles Intended for Children Under 8 Years and Age; and
- 16 CFR part 1501 Method for Identifying Toys and Other Articles Intended for Use by Children Under 3 Years of Age Which Present Choking, Aspiration or Ingestion Hazards Because of Small Parts.

5. Performance Requirements

5.1 *Enclosed Openings*:

5.1.1 There shall be no openings in the structure of the bed rail that will permit passage of the probe shown in Fig. 1 when tested in accordance with 7.1.

Rationale: From 1990 to March 1998, the CPSC has records of 9 fatalities associated with portable bed rails. In most of these incidents, the victims were entrapped at the head or neck. In order to reduce the risk of a child slipping through an opening torso first and getting caught at the head, any accessible opening of an installed bed rail should be smaller than the torso dimensions of the smallest user. The age of the victims in the fatal incidents range from 3 months to 4 years. Four of

the victims were 7 months old or younger (one 3-month-old, one 5-month-old, two 7-month olds). The width and length of the test probe (2.7 inches by 4 6 inches) are based on the torso dimensions (hip depth and lower torso breadth) of an infant. The 5th-percentile hip depth of a 3-4 month old is 2.7 inches. The anthropometric data tables do not provide torso breadth dimensions for the 3-4 month age range, but rather for the 0-3 and 4-6 month age ranges. The 5th-percentile torso breadth dimension for a 0-3 month old is 3.5 inches. However, since this dimension is the 5th percentile, it is likely to be more representative of newborns than 3 month olds. Although the 5th percentile dimension for 4-6 month olds (4.9 inches) will include some percentage of 3 month olds, the 50th percentile dimension for 0-3 month olds is smaller than this value (4 6 inches) and may be more representative of small 3 month olds. Therefore, the length of the test probe (4.6 inches) is based on the 50th-percentile lower torso breadth for a 0-3 month old The other probe dimensions are taken from a similar probe that is used to address entrapment hazards in public playground equipment.

5.2 *Openings created by bed rail displacement*:

5.2.1 When tested in accordance with the procedure in 7.2, there shall be no gap between the mattress and the bed rail that will permit passage of the probe shown in Fig. 1.

Rationale: Same rationale as stated in 5.1.1

5.3 *Protrusions:*

5.3.1 There shall be no protrusions (e.g., bolts, screws and other fastening hardware) that extend perpendicular to the plane of the surrounding surface greater than 0.125 inches (3.2 mm).

Rationale: Protrusions can present strangulation hazards by creating catch points for strings and loose clothing. One of the bed rail related fatalities involved a 15-month-old child who hung by his shirt collar that was caught on a protrusion.

6. Test Equipment

6.1 Test Mattress: A 4-in. (100 mm) thick, open cell polyurethane foam pad. The mattress size is approximately 38 in. by 74-½ in. by 4 in. thick (0 96 m by 1 89 m by 100 mm) having a density of 1 lb/ft3 (16 kg/m3). The covering material for the mattress is a printed, non-woven fabric. There are no surface texture features (e.g., quilting) on the test mattress.

> **Rationale:** The proposed test mattress is lightweight, inexpensive, and commonly available. "No surface texture features" is specified in order to achieve the best possible test repeatability.

6.2 Test Bed: The test bed is a common box spring measuring approximately 6 in high by 38 in. by 74-½ in. (150 mm high by 0.96 m by 1.89 m). The box spring shall be of typical frame construction that is topped with a rigid board that has a layer of approximately ¼ in. to 3/8 in. of open cell foam and covered with a non-woven fabric similar to that of the test mattress.

> **Note:** In order to provide added specification for the test bed/mattress interface, the staff recommends that the working group explore the development of a test method that measures the pull out resistance of a standardized test jig that is placed between the mattress and box spring.

6.3 Test Load – A weight placed on a rigid test board and positioned on the test mattress. The combined weight of the test weight and test board shall be 33-lb (15 kg).

> **Rationale:** The Test Load of 33-lb is chosen to represent an average range of intended users. 33 lb. is the approximate weight of both a 95th percentile 2-yr-old and a 5th percentile 5-yr-old.

6.4 Small Test Board: A rigid board that is 6 in. by 6 in. (152 mm by 152 mm) square and ¼ in. (6 mm) thick.

> **Rationale:** The small test board is based on the torso width of a 95th percentile 2-yr-old (5.6 inches). This dimension is rounded to six inches and assumed to be

symmetrical (square) to approximate the load of the child sitting at the edge of the bed

6.5 Large Test Board for bed rail displacement test: A test board consisting of a 1/4 in thick (6 mm) fiber board and measuring 40 in. by 8 in. (1.0 m by 200 mm).

Rationale: The large test board distributes the 33-lb test load evenly along the length of the bed rail so as not to bias one bed rail design over another. The 40-inch length approximates the height of a user A 95th percentile height ranges from 36.5 inches for a 2-year-old to 45.5 inches for a 5-year-old. The 8-inch width approximates the hip breadth of a user. A 95th percentile hip breadth ranges from 8.4 inches for a 2-year-old to 9.1 inches for a 5-year-old.

6.6 Torso Probe

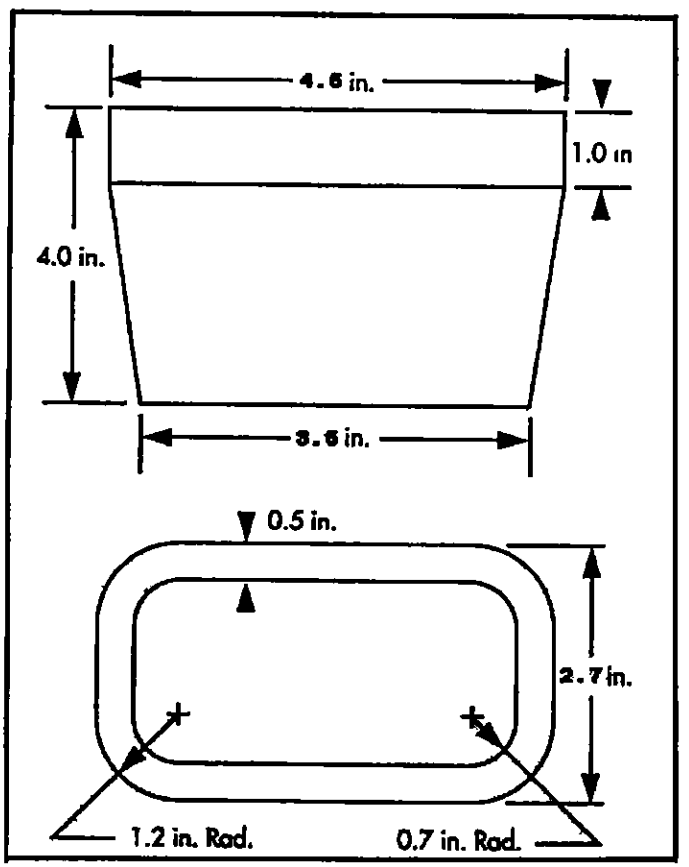

Figure 1 - Torso Probe

7. Test Methods

7.1 Test method – for Enclosed Openings

7.1.1 Install the bed rail in accordance with the manufacturer's instructions.

7.1.2 Place the 33-lb test load (using the small test board) at the edge of the mattress and adjacent to the bed rail. Align the edge of the small test board with the mattress edge.

7.1.3 Place the probe shown in Fig. 1 into any opening in the bed rail at and around the area where the test load compresses the mattress. Place the probe, tapered end first, in the orientation most likely to permit its passage and gradually apply a force of 10-lbf (44 N) in a direction perpendicular to the plane of the opening. Sustain the force for a period of 5 seconds.

7.1.4 Repeat this test along the entire length of the bed rail, at intervals no greater than every 12 in. (0.3 m).

7.2. Test Method for Bed Rail Displacement Test

7.2.1 Secure the test bed to prevent movement in any direction from transmitted forces.

7.2.2 Assemble and locate the bed rail on the test bed in accordance with the manufacturer's instructions.

7.2.3 Align the vertical section of the bed rail as close as possible to the edge of the test platform.

7.2.4 Position the test mattress on top of the test bed and bed rail.

7.2.5 Place the large test board on top of the test mattress, aligning the edge of the long side with the edge of the mattress that is adjacent to the bed rail.

7.2.6 Add additional weight to the test board to achieve the 33-lb test load. Distribute the weight evenly in thirds (one third at each end of the board and one third at the center of the board).

7.2.7 Apply a horizontal force of 50-lbf (222 N), to the bed rail in a direction that is outward from and perpendicular to the test mattress. The force shall be applied to the bed rail at points that are level with the mattress upper surface. Apply the force to three points on the bed rail:

1. the farthest right edge
2. the farthest left edge
3. the center of the bed rail

Apply the force over a period of 5 seconds and maintain it for 10 seconds After each force application, replace the bed rail to its pre-test installation position.

7.2.8 While the 50-lbf is applied to the bed rail, use the torso probe to check any gaps that have formed between the mattress and the bed rail. Place the probe shown in Fig. 1 into any opening between the mattress and the bed rail. Place the probe, tapered end first, in the orientation most likely to permit its passage and gradually apply a force of 10-lbf (44 N) in a direction perpendicular to the plane of the opening. Sustain the force for a period of 5 seconds.

Rationale: Three studies on strength were reviewed in examining the bed rail issue. Brown et al., (1973) showed that children age five years are capable of exerting a pushing force of 60 lbf at the 95th percentile level and about 40 pounds on the average. Peter de Winter (1994) corroborated these values in a subsequent study which obtained pushing capabilities of 245 newtons (55 lbf) for males and 221 newtons (50 lbf) for females. The values from de Winter's study are average values and are not reflective of the upper percentiles of the five-year old age group.

A March 1998 British study by Haines and Clift recorded forces that children ages 3-6 years applied to a test rig that represented a bed rail For the 4-5 year old age range, the 95th percentile value of maximum recorded force was 22.1 kgf (48.7 lbf).

Based on these studies, CPSC staff proposes that bed rails should withstand an outwardly pulling force of 50 lbf to simulate a potential force that may be applied under conditions of reasonably foreseeable use.

The 10-pound force applied to the test probe is intended to ensure the mattress will not readily compress under a portion of the occupants body weight and expose a hazardous opening.

7. Marking and Labeling

7.1 There shall be a permanent label or marking on each bed rail that identifies the name and address (city, state, and zip code) of the manufacturer, distributor, or seller.

7.2 A code mark or other identification that identifies the date (week or month and year) of manufacture and the model number shall be provided on the bed rail and either on the retail package containing the bed rail or on the shipping container.

7.2.1 The manufacturer shall change the model number whenever the bed rail undergoes a significant structural or design modification or other change that affects its conformance with this consumer safety specification.

7.3 *Appropriate Age, Weight, and Height* - The retail package shall have a label stating that the product is intended for children:

- between the ages of 2 years to 5 years
- with a minimum weight of 25 pounds
- with a minimum height of 35 inches

7.4 *Warning Labels* – The retail package shall be labeled with the following warnings:

- Bed rails are not for use with infants and should never be used in place of a crib.
- Always use this bed rail with a standard mattress and box spring.
- Never use a bed rail on a bunk bed, youth bed, water bed, crib, or bed without a box spring unless it is specifically designed for that purpose.

7.4.1 All warning labels shall be permanent and shall adhere to ANSI Z 535 with respect to color, lettering size, font, etc. and must be segregated from advertising.

8. Instructional Literature

8.1 *Appropriate Age, Weight, and Height* - The instructional literature shall indicate that the product is intended for children:

- between the ages of 2 years to 5 years.
- with a minimum weight of 25 pounds
- with a minimum height of 35 inches.

8.2 *GeneralWarnings* – The instructional literature shall contain the following general warnings:

- Bed rails are not for use with infants and should never be used in place of a crib.
- Always use this bed rail with a standard mattress and box spring.
- Never use a bed rail on a bunk bed, youth bed, water bed, crib, or bed without a box spring

unless it is specifically designed for that purpose.

8.3 *Installation Warnings* – the instructional literature shall contain the following installation warnings:

- Install the bed rail so that it is placed at least 9 inches away from the head and foot of the bed.
- Make sure the rail is pressed firmly against the mattress
- Test the rail by pulling on it and observing and correcting any gap produced between the rail and the mattress.

8.4 *Maintenance Warnings* - the instructional literature shall contain the following maintenance warnings:

On a daily basis the bed rail should be checked to ensure:

- the rail is pressed firmly against the mattress with no gaps
- there are no broken or missing parts
- the locking mechanism is working correctly (if equipped with a locking mechanism)

References:

Brown, W.C., Buchanan, D.J., and Mandel, J., "A Study of the Strength Capabilities of Children Ages Two through Six", National Bureau of Standards, U.S. Department of Commerce, NBSIR 73-156, August 7, 1973

de Winter, Peter E., "Pushing and pulling – Loads exerted by Children", TNO Building and Construction Research, The Netherlands, 1994.

Haines, Victoria and Clift, Laurence, ICE Ergonomics Ltd. on behalf of Argos plc and Baby Products Association, "Development of a retention test for the British Standard for bedguards", document Number 98/702550, March 1998

TAB F

United States
CONSUMER PRODUCT SAFETY COMMISSION
Washington, D.C. 20207

MEMORANDUM

DATE: March 30, 2000

TO : Patricia Hackett
Materials Engineer
Directorate for Engineering Sciences

Through: Andrew G Stadnik, P E
Associate Executive Director
James C Hyatt P E
Directorate for Laboratory Sciences

FROM : George F Sushinsky (301-413-0172)
Mechanical Engineer
Robert L Hundemer (301-413-0180)
Mechanical Engineering Technician
Division of Engineering Laboratory
Directorate for Laboratory Sciences

SUBJECT : Portable Bed Rails, Performance Evaluation and Prototype Development

Background:

In the fall and winter of Fiscal Year 1998, staff from the Division of Engineering in the Directorate for Laboratory Sciences (LSE) tested 13 portable bed rails representing the products of 7 manufacturers. The tests measured the forces to move the bed rail approximately 90 mm (3.5 in) away from the mattress. The test methods and data from these tests, along with a set of proposed performance criteria from Human Factors (HF) staff, formed the basis for the draft standard presented to an ASTM F 15 work group The work group is tasked with developing test methods and criteria for a new ASTM standard on portable bed rails This memo summarizes the data from the LSE tests, lists test criteria developed by HF staff, and describes a prototype bed rail that may meet the test requirements.

Developmental Testing:

The tests described below were conducted before HF-proposed performance criteria were developed The tests represent a range of test conditions and potential combinations of test variables that may affect the outcome of the tests

1. Description of Test Protocol.

A. Mattresses Two standard, twin-size bed sets (mattress and box spring) were selected for the test program

(1) Bed set A consists of a 100-mm (4-in) thick foam mattress and matching box spring The mass of this mattress is 3 2 kg (7 1 lb_m). The covering material for both the mattress and box spring is a printed, non-woven fabric There are no surface texture features to either piece of the bed set

(2) Bed set B consists of a 220-mm (8 1/2 in) thick innerspring mattress and matching box spring. The mass of this mattress is 22 2 kg (48 9 lb_m) The mattress is covered with a thermoplastic fabric, padded and tufted over the inner spring matrix The box spring is a wire frame covered with a non-woven fabric

B. Sleeping Child To simulate a child lying on the bed, masses up to 18.2 kg (40 lb_m) are placed on the mattress Three different conditions are simulated:

(1) Baseline - no mass placed on the mattress

(2) Small child - A 6-8 month old, 8 0 kg (17 6 lb_m) CAMI doll was used to represent the youngest child recommended by some bed rail manufacturers.

(3) Large Child - An 18 2 kg (40 lb_m) consisting of the CAMI doll, and masses of 4 5 kg (10 lb_m), 2 3 kg (5 lb_m) [2 ea.], and 1 1 kg (2.5 lb_m) were used to represent the heaviest child reported to have experienced problems with a bed rail. The length of the "large child was 1.07 m (42 in) The mass and weight used are representative of upper percentile children in the 43 to 48 month age group.

C. Bed Rail and Mass Positioning: The position of the bed rail and placement of the mass on the mattress are other test parameters.

(1) The bed rail was positioned with the left edge 305 mm (12 in) from the left edge of the bed

(2) The CAMI doll was placed on the mattress with its shoulder at the left edge of the bed rail This was based on instructions from some manufacturers who advise the user to position one end of the bed rail even with the child's shoulder

D. Force Measurements· Forces were measured using a digital force gage with a capacity of 220 N (50 lb_f) The forces were measured at the four corners of the bed rail, and at the geometric center The force gage was pulled steadily by hand in a horizontal direction until any part of the bed rail was pulled 90 mm (3 5 in) relative to its initial position.

Five measurements are taken for each test condition If the test resulted in the mattress moving relative to the box spring by more than 25 mm (1 in) during the first two tests, the mattress is restrained from moving during the last three tests

E Test Matrix The test matrix consists of all possible combinations of the variables in the test for each bed rail The test variables were

(1) 2 - bed sets
(2) 3 - test masses
(3) 5 - measurement locations

2. Test Results

Tables 1 and 2 summarize the average force measurements to move the bed rail when forces are applied at the lower and upper left side corners of the bed rails using the foam mattress set Tables 3 and 4 show similar data for the innerspring mattress and box spring bed set. The left-side forces are reported here because the mass of the simulated child was added near the left edge of the bed rail The location of the mass near the left edge of the bed rail makes the left side harder to move Measurements of forces on the bed rail at the mattress level would be between the force levels shown at the bed rail's corners. Similarly, measurements made with the mass distributed on the mattress generally would be less than the values shown for the mass near the left edge of the bed rail.

Table 1 - Bed Rail Force Data

Bed set Mattress - Foam Force Location - Lower Left Corner Average force required to pull the bed rail 90 mm (3 5 in) relative to its initial position.			
Sample No	Force (baseline) (lb_f)	Force (small child) (lb_f)	Force (large child) (lb_f)
97-793-0362-01	2 2	5 5	6 0
97-793-0362-02	1 8	6 5	6 8
97-793-0387-01	1 4	3 6	4 2
97-793-9518	1 8	8 4[1] / 8 6	13 9[1] / 12 7[2]
98-793-0002	2 5[1]/3 0[2]	8 0[1]/15 5[2]	12 4[1]/18 3[2]
98-793-0001-01	2 5[1] / 6 5[2]	8 8[1] / 12 9[2]	11 0
98-793-0001-02	3 6[1] / 4 5[2]	10 3	12 4
98-793-0007	2 8[1] / 4 5[2]	9 6[1] / 11 0[2]	14 1
98-793-0012	1 8	5 8	6 5
98-793-0013	2 9	8 0	9 6
97-793-0388-01	2 0[1] / 6 7[2]	7 6[1] / 12 9[2]	13 0[1] / 15 3[2]
97-793-0388-02	1 0	7 6[1] / 8 4[2]	9 1
97-793-0388-03	1 4	7 4[1] / 10 9[2]	11 8[1] / 14 7[2]

[1] Mattress moves with bed rail Average of two measurements
[2] Mattress held in place Average of three measurements

Table 2 - Bed Rail Force Data

Bed set Mattress - Foam Force Location - Upper Left Corner Average force required to pull the bed rail 90 mm (3 5 in) relative to its initial position			
Sample No	Force (baseline) (lb_f)	Force (small child) (lb_f)	Force (large child) (lb_f)
97-793-0362-01	2 2[1] / 2 4[2]	5 8	6 0
97-793-0362-02	2 2	7 4	9.0
97-793-0387-01	1 7	5 1	7 6
97-793-9518	1 7	7 3[1] / 7 7[2]	13 6[1] /12 9[2]
97-793-0002-01	2 6[1] / 4 9[2]	6 1[1] / 14 7[2]	10 7[1] / 22 7[2]
98-793-0001-01	3 0[1] / 7 7[2]	8 0[1] / 17 7[2]	12 3[1] / 19 9[2]
98-793-0001-02	2 8[1] / 3 7[2]	6 8[1] / 13 1[2]	11 0
98-793-0007-01	2 4[1] / 8 2[4]	7 2[1] / 18 0[4]	10 2[1] / 16 0[4]
98-793-0012	2 5	7 8	8 6
98-793-0013	3 0[1] / 4 2[4]	8 8[1] / 11 8[4]	13 1
97-793-0388-01	1 9[1] / 6 4[4]	8 0[1] / 15 4[4]	10 7[1] / 19 6[4]
97-793-0388-02	1 0	6 8[1] / 9 1[4]	9 8
97-793-0388-03	1 5	6 8[1] / 10 6[4]	11 8[1] / 13 8[4]

[1] Mattress moves with bed rail Average of two measurements
[2] Mattress held in place Average of three measurements

Table 3 - Bed Rail Force Data

Bed set Mattress – Innerspring Force Location - Lower Left Corner Average force required to pull the bed rail 90 mm (3 5 in) relative to its initial position			
Sample No	Force (baseline) (lb_f)	Force (small child) (lb_f)	Force (large child) (lb_f)
97-793-0362-01	4 7	7 4	8 2
97-793-0362-02	5 3	5 2	7 5
97-793-0387-01	1 4	3 6	4 2
97-793-9518	5 2	14 8	21 5
98-793-0002	9 0[1]/9 8[2]	13 9[2]	17 5[2]
98-793-0001-01	3 2	5 4	5 5
98-793-0001-02	10 1	15 0	14 7
98-793-0007	8 2	11 0	12 0
98-793-0012	4 7	7 5	8 7
98-793-0013	6 4	8 5	9 0
97-793-0388-01	5 3	8 8	15 2[1] / 17 3[2]
97-793-0388-02	3 3	5 4	4 6
97-793-0388-03	5 6	9 6	11 2

[1] Mattress moves with bed rail Average of two measurements
[2] Mattress held in place Average of three measurements

Table 4 - Bed Rail Force Data

Bed set Mattress – Innerspring Force Location - Upper Left Corner Average force required to pull the bed rail 90 mm (3 5 in) relative to its initial position			
Sample No	Force (baseline) (lb_f)	Force (small child) (lb_f)	Force (large child) (lb_f)
97-793-0362-01	5 2	9 5	10 3
97-793-0362-02	2 2	7 4	9 0
97-793-0387-01	1 7	5 1	7 6
97-793-9518	8 2	10[3]	10[3]
97-793-0002	8 9[1] / 16 5[2]	13 4[1] / 20 4[2]	19 4[1] / 23 0[2]
98-793-0001-01	9 8	12 7	13 4
98-793-0001-02	2 8[1] / 3 7[2]	6 8[1] / 13 1[2]	11 0
98-793-0007	10 0[1] / 19 3[2]	15 2[1] / 27 7[4]	17 4
98-793-0012	9 5	17 2	15 2
98-793-0013	12 8	16 2	16 7
97-793-0388-01	7 6[1] / 12 6[4]	11 8[1] / 18 2[4]	10 9
97-793-0388-02	3 8	6 8	6 0
97-793-0388-03	8 0	10 5	12 5

[1] Mattress moves with bed rail Average of two measurements
[2] Mattress held in place Average of three measurements.
[3] Deflects 4 in (100 mm) at mattress level

Discussion of Test Results

The data in the tables show general trends As expected, the addition of mass to the mattress generally increases the force needed to move the bed rail relative to the mattress. A similar effect is usually seen when the different bed sets are used – heavier mattresses require heavier forces to move a bed rail This latter result may be partially due to the differences in "texture" of the interface of the box spring and the interface's interaction with the bed rail's legs.

Other characteristics of the data are the amount of scatter and the occasional inconsistency. Much of it is due to the different interactions of the bed rail with the mattress and box spring surfaces, and the leverage (moments) produced when testing the bed rails at the upper corners of the bed rails

Proposed Test Criteria

In the summer of 1998, HF staff proposed performance criteria for testing and evaluating potential corrective actions for bed rails HF staff proposed these as minimum levels of performance to ensure a reasonable level of safety based on incident information, anthropometric data, and other human factors considerations.
The suggested performance criteria were

Applied Force	= 220 N (50 lb_f)
Allowed opening	= 71 mm (2 8 inches)

Some of the parameters needed to conduct the test were also given They included.

Test Location (of force application	= At mattress surface level and at top of rail
Simulated Weight (On mattress surface)	= 6 8 kg (15 lb_m)

The reasons for these parameters are

Applied Force HF's recommended a force of 220 N (50 lb_f) was based on the maximum force achievable by the largest size child in the incident database

Allowed Opening 71 mm (2 8 inches) represents the torso depth of the smallest child in the incident database

Test Location _The mattress surface level is a probable location for contact and force application of a sleeping child

Simulated weight. 15 pounds represents the smallest user documented in incident reports Laboratory tests used masses of (a) pounds (baseline condition), (b) 18 pounds (CAMI Mark II infant dummy to represent a small child), and (3) 40 pounds distributed over a 42-inch length to simulate a large child from the incident data.

Since this proposal was made, CPSC staff submitted a draft standard to an ASTM working group charged with development of a voluntary standard for bed rails. The primary differences between the draft standard and the previously proposed one are the test location at the mattress surface level and the use of a mass of 33 lb_m This mass represents the mass of the 5th percentile 5-year old

Sample Performance vs. Draft Requirements:

Based on the data in Tables 1 through 4, none of the tested bed rails would meet the proposed performance criteria The forces to move the bed rails beyond the proposed gap of

2.8 inches, with a mass of 40 pounds added to a foam mattress, were well below the force of 50 lb_f. With a 15 kg (33-lb_m) mass on the mattress the force to move the bed rail will be somewhat lower.

As a result of the poor performance of existing designs, LSE staff developed a concept design for a portable bed rail to meet the proposed performance criteria, and to not create an entrapment hazard or gap between the bed rail and the bed

Bed Rail Concept Design

In this concept for a portable bed rail design, an approach was taken to place the bed rail on top of the mattress instead of, as is typical, next to the mattress Placing the rail on top of the mattress eliminates a gap that might exist between the bed rail and the side of the mattress. A triangular shape was selected for the main body of the bed rail The inclined slope faces toward the inside of the bed The overall length is approximately 48 inches (1.2 m), and its is approximately 6-inches (150-mm) high with a 6-inch (150-mm) wide base The rail is attached to the mattress by a framework made of ¾-inch (19-mm) hollow tubing similar to that used in many designs of current model portable bed rails. The tubing is bent to right angles and attached to the back of the bed rail's body The tubing extends under the mattress and connects to three cross members made of the same tubing The length of this framework is approximately 29 inches (740 mm) and extends under the mattress approximately 15 inches (380 mm). Both the bed rail base and the framework have non-slip abrasive tape applied to their surfaces The bed rail also clamps to the mattress using the framework The bed rail is pushed down against the mattress and then secured to the framework via U-shaped clamps. (See Figure 1) Laboratory tests of this portable bed rail design demonstrated its ability to meet the proposed test requirements

The important features of this portable bed rail design are.

1. It withstands the 220 N (50 lb_f) tension force and stays attached to the mattress.
2. Since the bed rail is on top of the mattress, no gap exists between the bed rail and the mattress sides.
3. The 45-degree inclined plane faces the bed occupant and presents no hazard.
4. The clamping force of the bed rail on the mattress, coupled with the abrasive surfaces between the mattress and bed foundation, act in concert to secure the bed rail to the mattress

This particular concept design has only been tested in a laboratory setting. There are other designs that also can be envisioned to meet the proposed requirements of the standard. However, to move from concept through prototype and production stages of manufacturing often requires a study of the human factors issues associated with the practical and safe use of the particular product design. Such a study is beyond the scope of this document.

Figure 1 - Bedrail Prototype

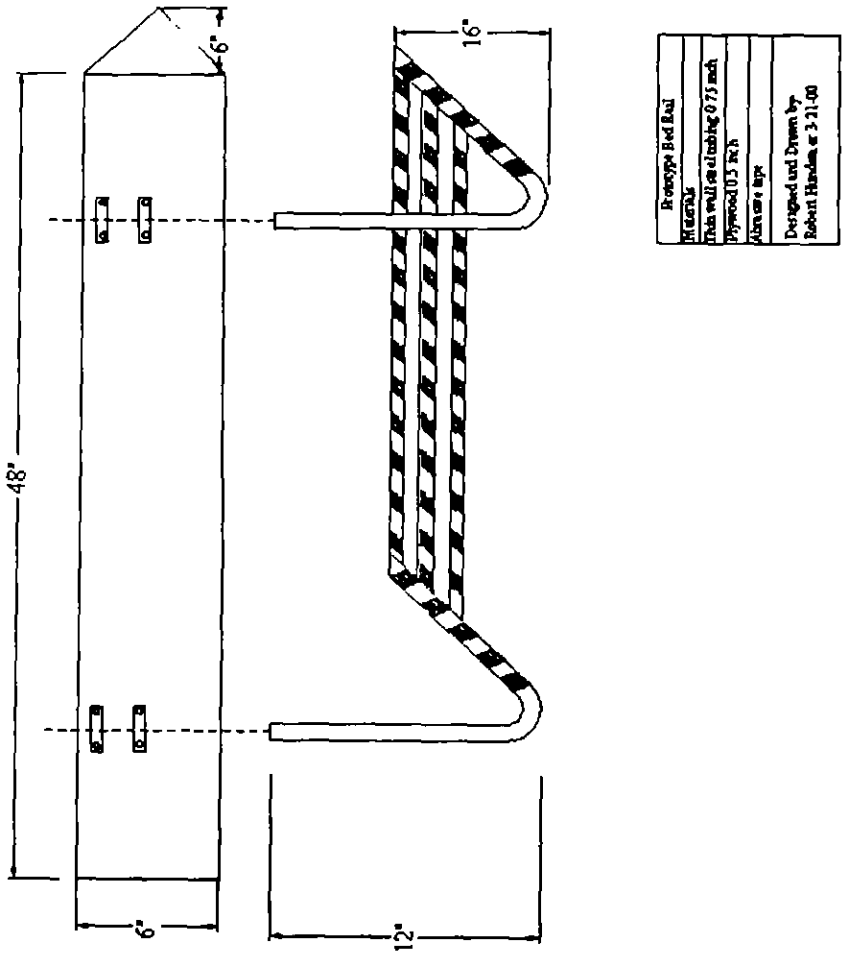

TAB G

UNITED STATES
CONSUMER PRODUCT SAFETY COMMISSION
WASHINGTON, DC 20207

Memorandum

May 5, 2000

TO: Patty Hackett, Project Manager
Division of Engineering Sciences

Through: Howard Tarnoff, Attorney HT
Office of Compliance, Legal Division

Through: Terri Rogers, Associate Director TRogers
Office of Compliance
Recalls and Compliance Division

From: Valery V. Ceasar, Senior Compliance Officer VVC
Office of Compliance
Recalls and Compliance Division

Subject: *Child Entrapment and Portable Adjustable Bed Rails*

The Office of Compliance staff investigation of portable adjustable child bed rails was prompted by a fatal incident involving a 19 month old male who became entrapped between the mattress and bed rail. During the staff's investigation, it discovered that all of the bed rails manufactured and sold to consumers had a similar design and held a potential for entrapment.[1] Further, almost all of the manufacturers' records listed incidents involving entrapments, some of which the Commission was already aware of.[2] As a result, Compliance opened cases with a total of eight firms whose bed rails had been involved in incidents of child entrapment.

Beginning in November 1997, notice was given to eight manufacturers of the staff's preliminary determination of a substantial product hazard in this matter. Specifically, the staff determined that the bed rail slides away from the side of the mattress, leaving a space between the mattress and bed rail, presenting a head entrapment hazard, which can result in serious or fatal injuries.[3]

[1] The greatest potential for serious injury and death from entrapment exists for the age group 2 years and under.
[2] One manufacturer listed no reported incidents at the time the Compliance staff initiated the investigations. Further, at that time a review of our epidemiological data revealed no reports of incidents involving the manufacturer's brand bed rail
[3] Asphyxia as a result of entrapment is the leading cause of death with this product, in the age group 2 years and under.

In April 1998, the staff met with the bed rail manufacturers to discuss the entrapment issue. At that time, the manufacturers were reluctant to develop a retrofit or new design program out of concerns that improving the fit of the rail to the side of the mattress could present an even greater risk of serious injury for all age groups, including the 2 to 5 year age group considered by the staff as the appropriate age group for the product Instead, the industry recommended an "Information and Education" campaign to educate consumers on the proper use of the bed rails and the appropriate age group for the product. The staff was concerned that such a campaign would be ineffective in reducing risk and addressing the hazard.

In November 1998, one of the eight manufacturers took the initiative to pursue the concept of a new product design, and hired an outside design expert to review the issues surrounding an improved bed rail As a result of the independent expert review, the manufacturer reiterated the initial conclusion that any attempt to improve the fit or affix the rail to the mattress increased the potential for entrapment for all age groups. Further, the increased cost of producing a new product could result in the manufacturer "out pricing" itself from the market, which was of great concern to the manufacturer.

After a careful review of the staff's concerns, and an evaluation of the complexity of issues raised in conjunction with design modifications to the product, the Compliance staff decided to close the eight cases and refer the matter to the Office of Hazard Reduction staff for consideration in developing a voluntary standard that would address all of the design issues surrounding the bed rails Accordingly, by memorandum dated September 29, 1999, the matter was referred to the Directorate of Hazard Identification and Reduction

TAB H

Billing Code 6355-01-P

CONSUMER PRODUCT SAFETY COMMISSION

Portable Bed Rails; Advance Notice of Proposed Rulemaking; Request for Comments and Information

AGENCY: Consumer Product Safety Commission.

ACTION: Advance Notice of Proposed Rulemaking.

SUMMARY: The Commission has reason to believe that certain portable bed rails may present an unreasonable risk of injury. A portable bed rail is a device intended to be installed on an adult bed to prevent a child from falling out of the bed. At least some bed rails are constructed in a manner that children can become entrapped between the portable bed rail and the bed. This entrapment can result in serious injury or death.

This advance notice of proposed rulemaking (ANPR) initiates a rulemaking proceeding that could result in a rule banning portable bed rails that present an unreasonable risk of injury. This proceeding is commenced under the Federal Hazardous Substances Act.

The Commission solicits written comments concerning the risks of injury associated with portable bed rails, the regulatory alternatives discussed in this notice, other possible ways to address these risks, and the economic impacts of the various regulatory alternatives. The Commission also invites interested persons to submit an existing standard, or a statement of intent to modify or

develop a voluntary standard, to address the risk of injury described in this notice.

DATE: Written comments and submissions in response to this notice must be received by [insert date that is 60 days after publication].

ADDRESSES: Comments should be mailed, preferably in five copies, to the Office of the Secretary, Consumer Product Safety Commission, Washington, D.C. 20207-0001, or delivered to the Office of the Secretary, Consumer Product Safety Commission, Room 502, 4330 East-West Highway, Bethesda, Maryland; telephone (301) 504-0800. Comments also may be filed by telefacsimile to (301)504-0127 or by email to cpsc-os@cpsc.gov. Comments should be captioned "ANPR for Portable Bed Rails."

FOR FURTHER INFORMATION CONTACT: Patricia L. Hackett, Directorate for Engineering Sciences, Consumer Product Safety Commission, Washington, D.C. 20207; telephone (301) 504-0494, ext. 1309.

SUPPLEMENTARY INFORMATION:

A. The Product

A portable bed rail (PBR) is a device intended to be installed on an adult bed to prevent a child from falling out of the bed. PBRs are intended for use by children who can get in and out of bed unassisted. (Manufacturers generally recommend them for use with children from two to five years old.) However, many of the reported incidents of

injuries/death involved children younger than two years.

A typical PBR generally includes a vertical rail about fifteen inches in height and four feet in length with two or more horizontal arms at right angles to the plane of the rail that are intended to be slipped between the mattress support or box springs and the mattress. The PBR is held under the mattress by a variety of slip-resistant knobs, pads or other means intended to provide frictional resistance. However, this ANPR extends to any other designs that may present an entrapment hazard to young children.

The Commission has information which indicates that PBRs with the following characteristics have resulted in injuries and deaths from entrapment between the PBR and the mattress:

1. A vertical rail or rails intended to prevent a child from falling out of an adult bed.

2. Two or more horizontal arms, slats, or other surfaces at right angles to the vertical plane of the rail that are intended to be slipped between the mattress support and the mattress.

3. Frictional resistance between the horizontal arms, slats or other surfaces of the PBR and the underside of the mattress provided by slip-resistant knobs, pads, or otherwise as the intended means to prevent outward movement of the PBR.

B. The Risk of Death or Injury

1. *Description of Typical Incident.*

When a PBR is not installed snugly against the mattress or when the rods/bars that go under the mattress slip outward, a child can be entrapped in the resulting space between the PBR and the mattress or between the rods/bars themselves. The result can be an injury or death by asphyxia or strangulation.

2. *Death/Injury Data.*

The Commission has learned of twelve instances in which a PBR was associated with the death of a child. The cause of death in these incidents was asphyxia or strangulation. In eight of these incidents, death resulted from entrapment between the PBR and mattress. In one case the child slipped between the rails of the PBR and in another the child was found hanging from a protrusion on a PBR. Lastly, two children were found entrapped in the space between the portable bed rail and the headboard/bedpost of the bed. Nine of the twelve fatalities associated with PBRs were children under two years of age.

In addition to the fatalities, the Commission is aware of 24 non-fatal incidents. Five of these resulted in injuries. Nine of the 24 non-fatal incidents involved children under the age of two years.

The incidents that resulted in death are as follows:

a. March 6, 1990 -- A 7-month old male suffocated when his body slipped feet first through horizontal bars in a PBR

and he was pinned head first into the mattress of a single size bed.

b. August 2, 1991 -- A 3-month old male died of asphyxia when his head became entrapped between the bottom of a PBR and the mattress resulting in his hanging. One of the L-shaped rods had pulled out from under the mattress of the full size bed.

c. October 31, 1991 -- A 15-month old female died of mechanical asphyxia when her neck and upper body were pinned between a PBR and the mattress. The PBR was installed on the lower bunk of a bunk bed.

d. November 10, 1991 -- A 14-month old male died of ligature strangulation. He was found hanging by his shirt collar which caught on a metal clip with a small metal tab on the exterior of a PBR installed on a single size bed.

e. June 23, 1993 -- A 2-year old female died of positional asphyxia. The child, who had brain deformities, was found with her face inside a 2-3 inch gap between the mattress and the attached side rail of her toddler bed. The PBR was designed with a tubular extension to fit under the mattress to hold it in place. The PBR was secured below the mattress to the bottom slats of the bed with string.

f. October 14, 1994 -- A 7-month old male died of restrictive asphyxia when his neck became entrapped in a 2-3 inch gap between the end of a retractable bed rail and the bed post of a small twin bed.

g. December 8, 1995 -- A 2.5-year old female suffering from cerebral palsy died of positional asphyxia. She was found lying on her stomach between the mattress of her "youth size" bed and a PBR. The left side of her face was against the mattress and a plastic sheet that covered the mattress was covering much of the child's face.

h. March 7, 1996 -- A 5-month old male died of asphyxia when he became entrapped between a PBR and the mattress on an adult bed. The child was found face down with his face toward the mattress.

i. January 15, 1997 -- A 19-month old male died of pneumonia due to a cervical injury sustained by hanging when he became entrapped between a PBR and the upper bunk mattress on the wall side of a bunk bed. The victim was found hanging/suspended with the back of his head on the guard rail and his mouth pressed into the mattress.

j. March 18, 1998 -- A 4-year old mentally retarded male died of asphyxia due to hanging when he became entrapped between a wooden PBR with vertical slats and the mattress of a toddler bed. The victim's head/neck area was caught at the bottom of the bed rail with his head against the mattress and his torso and feet under the bed.

k. August 17, 1998 -- A 7-month old male died of asphyxia when his head became entrapped between the headboard of a toddler bed and a youth PBR.

l. November 7, 1998 -- A 5-month old female died of

asphyxiation when she became entrapped between the mattress of a king size bed and a PBR. She was found with her chin on the mattress. The medical examiner in this case believed the child's neck was resting on the PBR causing strangulation.

C. Relevant Statutory Provisions

This proceeding is conducted pursuant to the Federal Hazardous Substances Act (FHSA), 15 U.S.C. §§ 1261 *et seq.* Section 2(f)(1)(D) of the FHSA defines "hazardous substance" to include any toy or other article intended for use by children that the Commission determines, by regulation, presents an electrical, mechanical, or thermal hazard. 15 U.S.C. § 1261(f)(1)(D). An article may present a mechanical hazard if its design or manufacture presents an unreasonable risk of personal injury or illness during normal use or when subjected to reasonably foreseeable damage or abuse. Among other things, a mechanical hazard could include a risk of injury or illness "(3) from points or other protrusions, surfaces, edges, openings, or closures, ... or (9) because of any other aspect of the article's design or manufacture." 15 U.S.C. § 1261(s).

Under section 2(q)(1)(A) of the FHSA, a toy, or other article intended for use by children, which is or contains a hazardous substance accessible by a child is a "banned hazardous substance." 15 U.S.C. § 1261(q)(1)(A).

Sections 3(f) through 3(i) of the FHSA, 15 U.S.C.

§§ 1262(f)-(i), govern a proceeding to promulgate a regulation determining that a toy or other children's article presents an electrical, mechanical, or thermal hazard. As provided in section 3(f), this proceeding is commenced by issuance of this ANPR. After considering any comments submitted in response to this ANPR, the Commission will decide whether to issue a proposed rule and a preliminary regulatory analysis in accordance with section 3(h) of the FHSA. If a proposed rule is issued, the Commission would then consider the comments received in response to the proposed rule in deciding whether to issue a final rule and a final regulatory analysis. 15 U.S.C. § 1262(i).

D. Regulatory Alternatives

One or more of the following alternatives could be used to reduce the identified risks associated with PBRs.

1. *Mandatory rule*. The Commission could issue a rule declaring certain PBRs to be banned hazardous substances. This rule could define the banned products in terms of physical or performance characteristics, or both.

2. *Labeling rule*. The Commission could issue a rule banning PBRs that did not contain specified warnings and instructions.

3. *Voluntary standard*. If the industry developed, adopted, and substantially conformed to an adequate voluntary standard, the Commission could defer to the

voluntary standard in lieu of issuing a mandatory rule.

E. Existing Standards

The Commission is not aware of any promulgated state, voluntary, foreign, international, or other standard dealing with the described risk of injury or death. In February 1998, the CPSC staff requested that ASTM develop a provisional standard for PBRs to address the hazard of entrapment-related deaths. In May 1999, CPSC staff drafted proposed performance requirements and submitted them to ASTM for consideration. As of May 2000, the ASTM Portable Bed Rail Subcommittee had not balloted a proposed performance standard for these products.

F. Market Information

1. *PBR sales and numbers available for use.*

Based on information gathered by the CPSC Office of Compliance, eleven firms produced a total of approximately 7.7 million PBRs during the period from January 1988 to July 14, 1998. Subsequent sales (1998 and 1999) were apparently stable. Thus, based on available information, approximately 733,000 units are sold per year. The retail cost of a PBR is in the range of $15-$30.

No information is available on the average product life of a PBR. CPSC staff estimate that for the period of first use an expected life of two years would be appropriate. However, some units could see use with subsequent children so four years is estimated as a reasonable upper bound on

the expected useful life of a PBR. Assuming an expected useful life of four years and stable sales, there may be as many as approximately 3 million PBRs in use at any one given time (733,000 PBRs sold per year x 4 years).

2. *Suppliers.*

CPSC staff has identified at least eleven firms that market PBRs in the United States. There may be other manufacturers or importers that the staff has not identified.

3. *Substitutes.*

Substitutes for PBRs include beds equipped with fixed side rails that are designed for children in the two to five year old age range or differently designed PBRs that do not pose an entrapment hazard.

4. *Economic considerations.*

The CPSC is aware of 12 deaths since 1990 that are directly attributable to PBRs, for an average of 1.17 deaths per year over that period. Estimating the statistical value of life at $5 million and not considering the pain and suffering of survivors, the aggregate cost to society from PBR-attributable deaths is approximately $5.85 million annually. This estimate does not account for the costs associated with non-fatal PBR-related injuries.

Using the death rate and annual sales estimates noted above, CPSC staff calculate that the expected societal cost of those deaths over the life of a PBR is approximately $8

per PBR. Thus, if product improvements were 100% effective in preventing the predicted deaths, a cost per bed rail for the improvements of $8 would be economically justified. (According to CPSC staff, the $8 per bed rail societal cost represents between 27% and 53% of the retail price of a PBR.)

G. Solicitation of Information and Comments

This ANPR is the first step of a proceeding that could result in a mandatory rule for PBRs to address the described risk of injury or death. All interested persons are invited to submit to the Commission their comments on any aspect of the alternatives discussed above. In particular, CPSC solicits the following additional information:

1. The models and numbers of PBRs produced for sale in the U.S. each year from 1990 to the present;

2. The names and addresses of manufacturers and distributors of PBRs;

3. The expected useful life of PBRs;

4. Comparisons of the utility obtained from PBRs versus any available substitute products;

5. The number of persons injured or killed by the hazards associated with PBRs;

6. The circumstances under which these injuries and deaths occur, including the ages of the victims;

7. An explanation of designs that could be adapted to PBRs to reduce the described risk of injury;

8. Physical or performance characteristics of the product that could or should not be used to define which products might be subject to a rule;

9. The costs to manufacturers involved in either redesigning PBRs to remove the risk or removing PBRs from the market;

10. Other information on the potential costs and benefits of potential rules;

11. Steps that have been taken by industry or others to reduce the risk of injury from the product;

12. The likelihood and nature of any significant economic impact of a rule on small entities;

13. The costs and benefits of mandating a banning, labeling, or instructions requirement.

Also, in accordance with section 3(f) of the FHSA, the Commission solicits:

1. Written comments with respect to the risk of injury identified by the Commission, the regulatory alternatives being considered, and other possible alternatives for addressing the risk.

2. Any existing standard or portion of a standard which could be issued as a proposed regulation.

3. A statement of intention to modify or develop a voluntary standard to address the risk of injury discussed in this notice, along with a description of a plan (including a schedule) to do so.

Comments should be mailed, preferably in five copies, to the Office of the Secretary, Consumer Product Safety Commission, Washington, D.C. 20207-0001, or delivered to the Office of the Secretary, Consumer Product Safety Commission, Room 502, 4330 East-West Highway, Bethesda, Maryland 20814; telephone (301) 504-0800. Comments also may be filed by telefacsimile to (301)504-0127 or by email to cpsc-os@cpsc.gov. Comments should be captioned "ANPR for Portable Bed Rails." All comments and submissions should be received no later than [insert date that is 60 days after publication].

Dated:

_____
Sadye E. Dunn, Secretary
Consumer Product Safety Commission