b4/6b
cleared
per TAS
3/22/82

#278

ADVISORY OPINION

U.S. CONSUMER PRODUCT SAFETY COMMISSION

WASHINGTON, D.C. 20207

8

OFFICE OF THE
GENERAL COUNSEL

AUG 14 1980

Mr. Richard S. Steffen, Manager
Bachtold Brothers, Inc.
619 N. Center Street
Forrest, Illinois 61741

Dear Mr. Steffen:

This letter is in response to your letter of April 21, 1980, concerning compliance with the Commission's Safety Standard for Walk-Behind Power Lawn Mowers. I have also considered the information in the report submitted by Robert B. Johnston on his visit to your plant on April 16, 1980.

In your letter, you request that the Commission "exempt" your Bachtold model mower from the standard "as . . . the weed mower is not a consumer product item." Based on the available information, we would agree that the Bachtold model mower is not a "consumer product" subject to the standard. Thus, a proceeding to specifically exempt the Bachtold mower described would be unnecessary.

Section 3(a)(1) of the Consumer Product Safety Act (CPSA), 15 U.S.C. 2052(a)(1), defines "consumer product" as:

> "any article, or component part thereof, produced or distributed (i) for sale to a consumer for use in or around a permanent or temporary household or residence, a school, in recreation, or otherwise, or (ii) for the personal use, consumption or enjoyment of a consumer in or around a permanent or temporary household or residence, a school, in recreation, or otherwise; but such term does not include --
> (A) any article which is not customarily produced or distributed for sale to, or use or consuption by, or enjoyment of, a consumer..."

This definition has been interpreted so that products that are not sold to, or used by, consumers more than occasionally are not considered to be consumer products. The uses you describe for these mowers by farmers around fields and electric fences would not be use by consumers as contemplated by the CPSA. The non-consumer nature of these products is confirmed by the following factors:

1. The fact that your distributor and factory representative solicit business only from agricultural, industrial, and commercial accounts.

2. The fact that you advertise only to implement dealers and the agricultural market.

3. The high cost of your product relative to normal consumer walk-behind mowers.

4. The non-adjustable 2-3/4 inch cutting height.

5. The relatively large and heavy construction of, and provision for commercial type attachments to, the mower.

Of course, any significant change in the characteristics of this mower from those identified in the April 16, 1980, inspection, or in the use or distribution patterns for this model, could change this determination.

While the views expressed in this letter are based upon the most current interpretation of the law by this office, and by the Commission's Directorate for Compliance and Enforcement, they could subsequently be changed or superseded by the Commission. Please do not hesitate to contact me if you have further questions regarding this matter.

Sincerely,

Stephen Lembery

Stephen Lembery
Assistant General Counsel

BACHTOLD BROTHERS, INC.

Power Mowers & Attachments

FORREST, ILLINOIS 61741 • TELEPHONE 657-8105

Office Phone Number 657-8213 AREA CODE 815

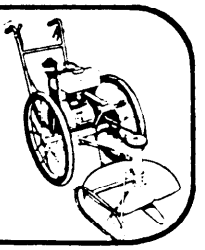

RECEIVED
APR 29 1980
Consumer Product Safety Commission
Office of General Counsel

Forrest, Illinois
April 21,1980

Consumer Product Safety Commission
Room 510 Bldg. L
Washington, D.C. 20207
Attn: Harliegh Euell

Dear Sir:

I am writing to you as a follow-up to visit made on April 16, 1980 from Robert B. Johnston of the Chicago office. We spent most of the afternoon togehter in examination of our product to determine our compliance to the CPSC regulations.

We have been using the new Danger decal, our blade is clutched with a brake(which has been standard equipment for over 30 years and can meet the 3 sec. requirement), the Bachtold mower weighs 200 lbs., and has an 8 hp engine, but our cutting width is only 26 inches. For this reason along with the market for this machine is why I am writing to ask you to exempt us from this standard.

Our company was originated over 35 years ago for use by farmers in the midwest to mow around the fences of the corn, bean and oats fields. It is necessary to keep down weeds from seeding into fields which hinder crop yields, wrap in moving parts of harvesting equipment, and can cause farmers to be docked when they sell their grain because of foreign material. Also livestock farmers who confine animals in designated areas by use of an electric fence must keep weeds and tall grasses from growing high enough to short out the electrical charge in the wire.

This machine was designed in the 26" width to accomplish only the farmers need and not further cut or destroy farm crops. About 12 years ago we made the option available that the mower could be purchased with a 30" cut, but because of no interest in this size cut we discontinued the option. Through this I believe we have proven the fact that our market does not want and will not accept a 30" cut.

You will find in the information forwarded from the Chicago office that we only advertise to the implement dealer or agricultural market. The distributor and factory representative only solicit business for agricultural, industrial or commercial accounts. This includes business

BACHTOLD BROTHERS, INC.

Power Mowers & Attachments

FORREST, ILLINOIS 61741 • TELEPHONE 657-8105
AREA CODE 815

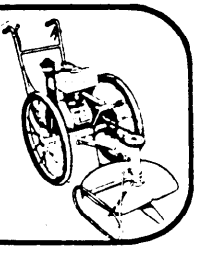

places such as nurseries and Christmas tree growers. We are listed by the Illinois Mfg. directory as a builder of agricultural equipment. Also take note that we comply to the ASAE(American Society of Agricultural Engineers) and O.S.H.A. standards for agricultural equipment. I am, personally, a Mechanization member of the ASAE. We also have a patent(copy enclosed) on the revolving protective blade enclosure. Since we have had this device we have not had a single liability claim. It only revolves at the speed of our forward travel and not having a discharge opening it can not hurl foreign objects. The design of the fingers encloses the blade at all times.

Specifications to further show our agricultural, industrial and commercial qualities are: A one piece frame construction with tubing ranging in wall thickness from 1/8" to 3/16" wall thickness and ¼" bar material, 3/4" axle with heavy duty 26" wheels constructed with 5/16" spokes carrying a 26 X 2 semi-pneumatic puncture proof tire, 7/8" stressproof spindle running in grease sealed ball bearings, and an all steel chain driven transmission drive with a variable speed ground control. These qualities bring the prices of this machine to a suggested list F.O.B. factory of $625.00 with a Briggs engine and $698.00 with the Kohler engine.

When a dealer receives the unit he adds from 50 to 75 dollars freight charges and handling cost.

The grass cutting attachments are 30" or 50" cut, the saw blade attachment is used by Christmas tree growers and nurseries. The tiller attachment is used by farmers that have a weed mower in small gardens or orchards. The speed jack is used for grain elevatore and augers on the farm and the commercial short weed and grass head has been used by rentals. We have discontinued our rental distributors and have not solicited the rental business since of February, 1979. However we have the head available and also carry parts for repair.

I sincerely beg your consideration to pardon us from this standard as I feel you can easily see and have ample evidence to support my claims that the weed mower is not a consumer product item.

Sincerely,

Richard S. Steffen

Richard Steffen, Mgr.

RS;ma
encl.

United States Patent [19]

Steffen

[11] **4,069,651**

[45] **Jan. 24, 1978**

[54] **REVOLVING PROTECTIVE BLADE ENCLOSURE**

[76] Inventor: **Richard S. Steffen**, 401 N. Wood St., Forrest, Ill. 61741

[21] Appl. No.: **682,898**

[22] Filed: **May 4, 1976**

Related U.S. Application Data

[63] Continuation-in-part of Ser. No. 536,421, Dec. 26, 1974, abandoned.

[51] **Int. Cl.**[2] **A01D 35/26**

[52] **U.S. Cl.** **56/320.1**

[58] **Field of Search** 56/320.1, 320.2, 255, 56/17.4, 17.5, 10.4, 503, 295; 30/286

[56] **References Cited**

U.S. PATENT DOCUMENTS

594,776	11/1897	Burnham	30/286
2,491,768	12/1949	Roof	56/320.1
2,504,259	4/1950	Ford	56/17.4
2,851,842	9/1958	Harp	56/10.4 X

Primary Examiner—Jay N. Eskovitz
Attorney, Agent, or Firm—Blair & Brown

[57] **ABSTRACT**

An enclosure mountable on a rotary type lawn mower for completely isolating the rotating blade so that it cannot be accidentally contacted by a person's hands or feet, nor the blade be readily hit against upward projecting rocks; the enclosure consisting of a circular metal shield from the periphery of which steel fingers extend radially and downwardly so to form a cage within which the blade swings, the shield having a central opening for fitting on and rotating with respect to the motor shaft housing and positioned above the blade so to rotate and spread the cut grass as it moves outwardly from the blade and rotate on engaging an object as well as rotate due to the reaction of the uncut grass on the fingers during a grass cutting operation.
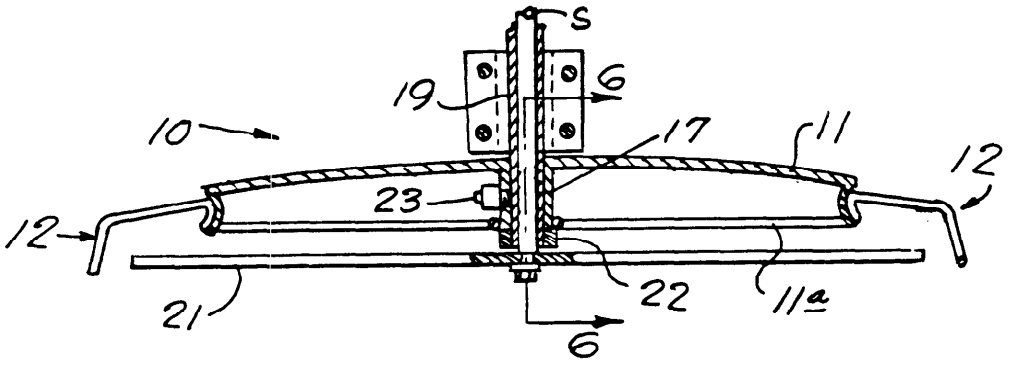
3 Claims, 6 Drawing Figures