277

ADVISORY OPINION

Number 277

U.S. CONSUMER PRODUCT SAFETY COMMISSION

WASHINGTON, D.C. 20207

OCT 25 1979

Mr. Michael J. Moriearty
Investigator
[redacted]

Dear Mr. Moriearty:

In a May 15, 1979 letter to Mr. [redacted] Corbett, you raised the question of what preemptive effect the Commission's requirements have on a product marketed as "[redacted]." By sending this office a copy of the letter, you sought our opinion on that question. After reviewing your May 15 letter, we obtained from you copies of some relevant earlier correspondence and we obtained from Mr. Corbett samples of the [redacted]. (Attached for your information is the July 9, 1979 letter from Mr. Corbett which accompanied the samples. We have already sent you a copy of our June 14, 1979 letter to him.)

Background

Under section 18(b) of the Federal Hazardous Substances Act (FHSA, 15 U.S.C. 1261 et. seq., as amended by the Consumer Product Safety Commission Improvements Act of 1976, Pub. L. 94-284), states and localities are generally prohibited from establishing or continuing in effect any non-identical banning requirement (including any which bans products not complying with specified performance or design requirements) applicable to a product that is designed to protect against the same risk of injury that a Commission requirement addresses. The same preemptive prohibition applies when the Commission has prescribed cautionary labeling requirements.

Exceptions to these FHSA prohibitions exist (1) for products that a government entity uses itself and (2) for products exempted following Commission notice and comment rulemaking, initiated by an application from a state or locality (FHSA, section 18(b)(2) and (3)). A third exception exists for certain state or local requirements, other than cautionary labeling requirements, "designed to protect against a risk of illness or injury associated with fireworks devices or components thereof...." (FHSA, section 18(b)(4)).

Certain Commission regulations might also be relevant to the preemption questions raised by your letter. A Commission regulation issued under the FHSA addresses the potential noise risk presented by paper and plastic caps (16 CFR 1500.18(a)(5)). Other Commission FHSA regulations specify labeling, performance and design requirements for fireworks devices (16 CFR 1500.14(b)(7); 1500.17(a)(8) and (9); and 16 CFR Part 1507).

Discussion

The Commission's staff has examined the [redacted] submitted by Mr. Corbett, and, based on presently available information, believes that they are not "hazardous substances" within the meaning of section 2(f)(1)(A) of the FHSA. Under that provision, "[t]he term 'hazardous substance' means...[a]ny substance or mixture of substances which...generates pressure through decomposition, heat, or other means, if such substance or mixture of substances may cause substantial personal injury or substantial illness during or as a proximate result of any customary or reasonably foreseeable handling or use...." Because of the extremely low level of force they generate, [redacted] do not fall within this statutory definition. They are thus subject to none of the statutory requirements prescribed by the FHSA, including the labeling requirements of section 2(p).

Similarly, [redacted] are not subject to any of the regulatory requirements that the Commission has prescribed under the FHSA. They are not "hazardous substances" under section 2(f)(1)(D) of the FHSA which includes "[a]ny toy or

other article intended for use by children which the [Commission] by regulation determines...presents an electrical, mechanical, or thermal hazard." More specifically, they are not "banned hazardous substances" under the Commission's toy cap regulation. In addition, [redacted] do not fall within any of the Commission's fireworks regulations (which have been issued under section 2(q) of the FHSA and thus apply only to "hazardous substances"). In short, the conclusion of this office is that no FHSA requirement currently applies to [redacted].

Despite this conclusion, the answer to your preemption question remains a difficult one. In the absence of any FHSA requirement applicable to [redacted], it would seem that there is no preemptive effect. However, this result would be ironical because it is essentially that [redacted] are "too safe" to be covered by FHSA regulations. If they were "hazardous substances" which complied with the fireworks labeling regulations, as one example, preemptive effects would undoubtedly exist as to state and local labeling requirements.

Moreover, the legislative history of the FHSA suggests that a broad reading should be given to the statute's preemption provisions. Congress clearly intended that products presenting potential risks that are addressed by the FHSA would be generally free from the economic burden of conflicting state and local safety regulations (Sen. Rep. No. 94-251, 94th Cong., 1st Sess., at 11-12). If [redacted] are subjected to any state and local safety regulations, this congressional intent will have been thwarted merely because they are not hazardous enough to reach the regulatory threshold under the FHSA statutory scheme.

In our view, a Court would be reluctant to reach the questionable result that a "safe" product is subject to differing state and local regulation, but a more hazardous product is not. For example, in ruling on the scope of the original FHSA preemption provision (superseded by the 1976 amendments), a Court interpreted the applicable legislative history as containing broad congressional support for "the obvious desirability of a uniform Federal standard." Chemical Specialties Manufacturers Association v. Clark, 482 F. 2d. 325 at 328 (5th Cir. 1973).

Conclusion

A literal interpretation of the FHSA preemption provisions results in the conclusion that no federal preemption of a state or local requirement exists for [redacted]. However, a broader reading of the provisions, along with their legislative history, suggests that a court might well find that state and local regulation of this product should be preempted.

In any case, our office is not prepared at this time to formulate a definitive response to your question. We hope that our discussion has been useful in providing some background and in raising some issues that relate to it.

Sincerely,

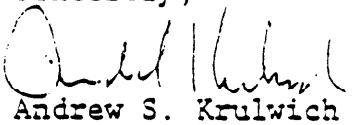

Andrew S. Krulwich
General Counsel

cc: [redacted] Corbett, Esq.

[redacted]

May 15, 1979

[redacted]

New York, NY 10001

Attention: Mr. [redacted] Corbett

Dear Mr. Corbett:

Subsequent to our last telephone conversation about [redacted], I telephoned Mr. Dave Thome of the U.S. Consumer Product Safety Commission in Washington, D.C. At that time I requested an opinion from CPSC as to the effect of federal preemption on state firework regulations as they apply to your product. I further requested information as to whether or not CPSC was aware that your product was not what is commonly called, a party popper or "snap n' pop", and if this fact would change their opinion as to the effect of federal regulation on your product.

As of today, I have not received a definitive answer from the Consumer Product Safety Commission.

I am therefore, by copy of this letter and our previous correspondence, requesting a formal opinion from the Office of the General Counsel, United States Consumer Product Safety Commission, on this matter. It is my hope that they will provide a copy of their opinion to your office as well as to mine.

Sincerely,

Michael J. Moriarty
Investigator
CONSUMER PROTECTION DIVISION

MJM:dmc
2/15

RECEIVED
MAY 23 1979

cc: Office of the General Counsel, United States Consumer Product Safety Commission, Washington, D.C. 20207
Dave Thome, U.S. C.P.S.C., Washington, D.C. 20207

FIG. 1

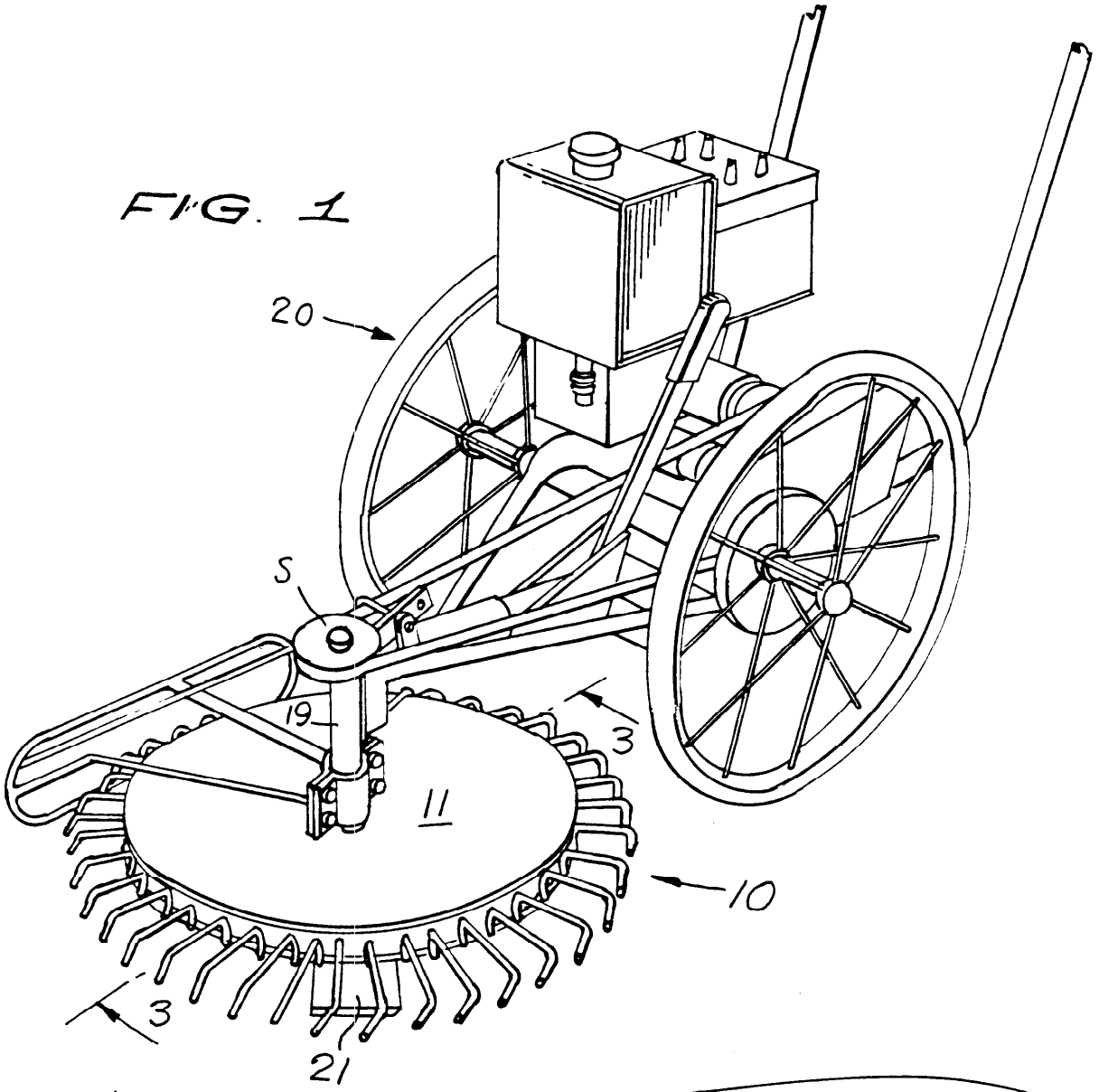

FIG. 2.

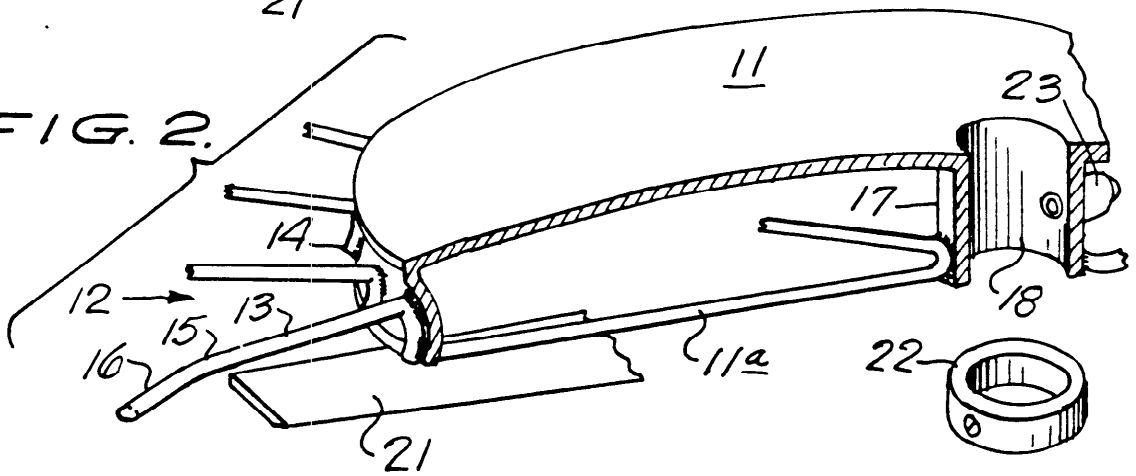

FIG. 3.

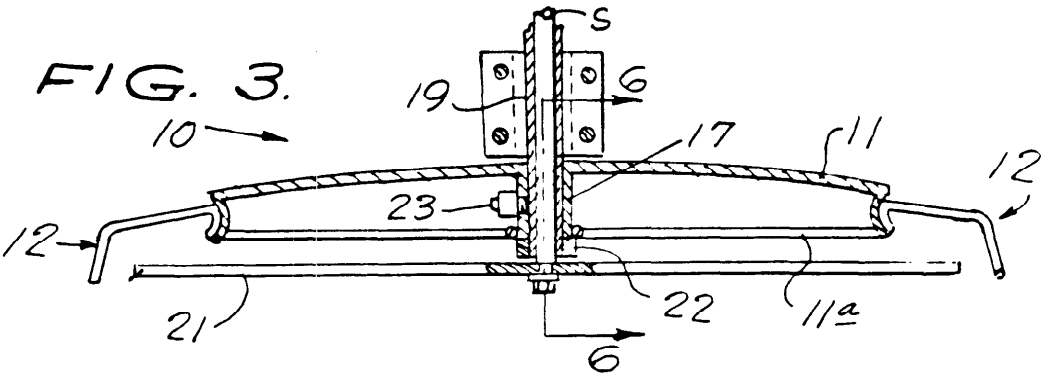

FIG. 4.

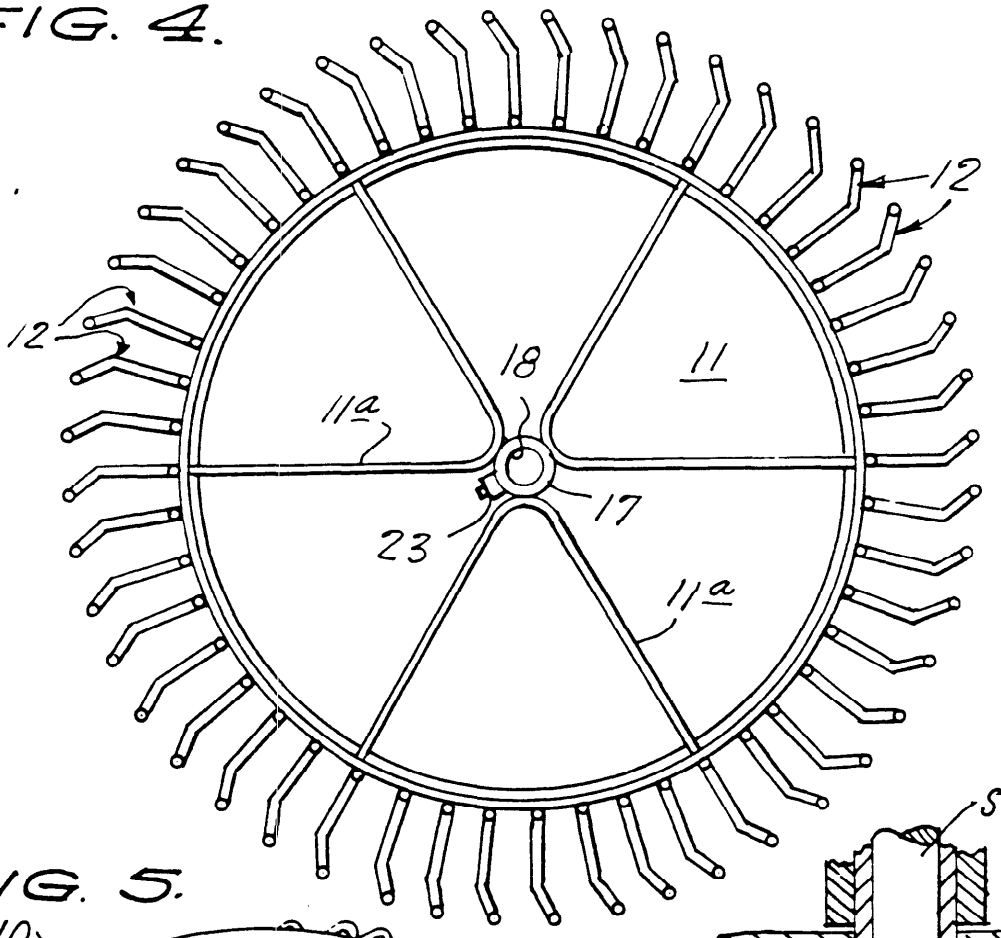

FIG. 5.

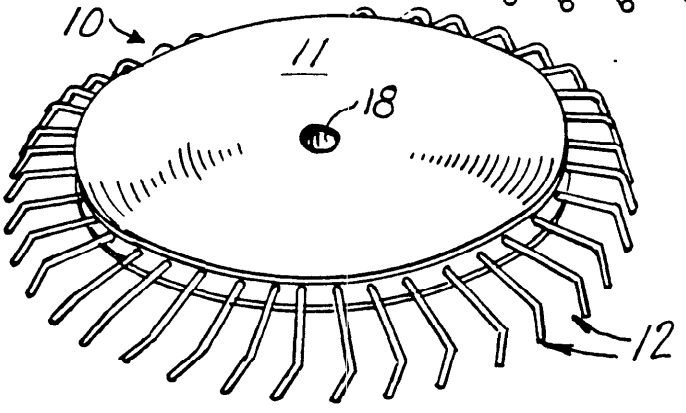

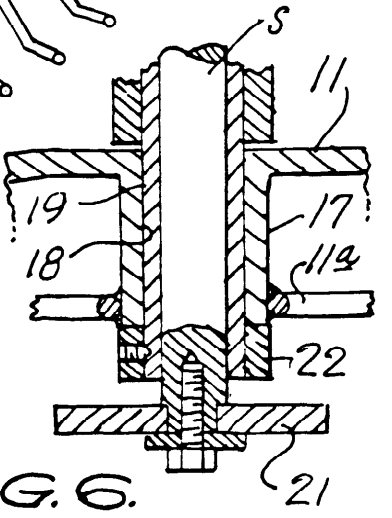

FIG. 6.

REVOLVING PROTECTIVE BLADE ENCLOSURE

CROSS REFERENCE TO RELATED APPLICATION

This application is a continuation-in-part of my copending application Ser. No. 536,421 filed 12/26/74 entitled Revolving Protective Blade Enclosure and now abandoned.

This invention relates generally to protective devices for lawn mowers.

It is well known that each year a great many persons are injured seriously while working with rotary type lawn mowers, wherein the blade swings with a great velocity and power so that it very easily cuts through a shoe in case a person accidentally gets his foot underneath the machine, resulting often in amputations of toes. Sometimes a person servicing the running mower gets his fingers too close to the blade so that this situation is very dangerous. Heretofore mower manufacturers have not developed a rotary type mower wherein the blade cannot be touched while running, so that this situation is therefore in want of an improvement.

Accordingly, it is a principal object of the present invention to provide a cage-like enclosure that is mountable on the mower so to prevent ready access of a person to accidentally contact the rotating blade.

Another object is to provide a protective blade enclosure which extends downward lower than the blade elevation so if a front end of a shoe accidentally gets underneath, it will contact the rotatable enclosure instead of the blade, and the enclosure will quickly push the shoe out and away.

Yet another object is to provide a rotatable protective blade enclosure which also prevents the blade from hitting any upwardly projecting rocks, thus preventing blade damage, and wherein the cage-like enclosure will prevent small stones from being thrown by the blade in all directions that might otherwise strike a person.

Yet a further object is to provide a revolvable protective blade enclosure that does not in any way interfere with the normal grass cutting operation and which can be easily and quickly installed on any rotary type lawn mower.

Other objects are to provide a revolving protective blade enclosure which is simple in design, inexpensive to manufacture, rugged in construction, easy to use, and efficient in operation.

These and other objects will be readily evident upon a study of the following specification and the accompanying drawing, wherein:

FIG. 1 is a perspective view of the present invention shown installed on a rotary type lawn mower;

FIG. 2 is a fragmentary perspective view of the enclosure shown in cross section;

FIG. 3 is a cross-sectional view taken on line 3—3 of FIG. 1, looking in the direction of the arrows;

FIG. 4 is a bottom view of the enclosure;

FIG. 5 is a top perspective view thereof shown per se; and

FIG. 6 is an enlarged fragmentary vertical sectional view taken on line 6—6 of FIG. 3, looking in the direction of the arrows.

Referring now to the drawings in detail wherein like reference characters indicate like parts throughout the several figures, the reference numeral **10** indicates generally a revolving protective blade enclosure according to the present invention. The enclosure **10** includes a circular shield **11** of sheet metal having steel fingers **12** welded to its periphery. Each finger **12** has a generally horizontal leg **13** that extends radially from the peripheral edge **14** of the shield **11**, a bend **15** at the end of the leg **13** and a downward leg **16** at the other end of the bend **15**. The downward leg **16** angles outwardly about 15° and backwardly about 15° from a vertical plane in both directions, as is evident in the drawings. The fingers are made of steel wire. The inner end **13'** of the finger **12** is bent downwardly to provide a firm engagement with the edge **14** of the shield **11**.

A central sleeve **17** integral with the shield **11** is provided with opening **18** so to fit on a motor shaft housing **19** of the rotary mower **20** and is positioned above the mower blade **21** carried by the motor shaft **3**, so that the same is caged in the enclosure. A spacer collar **22** is detachably secured to the housing **19** below the sleeve **17** to support the enclosure **10** in its properly spaced relation to the blade **21**. Spokes **11*a*** brace the sleeve and shield edge.

A grease fitting **23** may be included so to lubricate the opening **18**.

In operative use, it is now evident that the rotating blade is fully accessible to the grass for cutting but is otherwise enclosed by the freely rotatable enclosure so to not be contacted by a person or projecting objects such as rocks.

I claim:

1. A lawn mower comprising a blade, a powered shaft to drive said blade, said shaft surrounded by a stationary shaft housing, a freely rotatable blade enclosure journalled on said shaft housing and supported by a collar which is attached to a lower portion of said shaft housing, said blade enclosure including a shield member radiating outwardly from said shaft housing and terminating in a peripheral edge which supports outwardly and downward disposed fingers which are inclined from the verticle and extend downwardly below the plane of said blade and which serve to isolate said blade from an area outside of said shield and causes said enclosure to revolve by the reaction of said fingers against grass.

2. The device of claim 1 in which said fingers are disposed at an angle of substantially 15° from the horizontal and vertical planes, respectively.

3. The device of claim 1 in which said shield further includes spokes which extend from said peripheral edge to said opening to provide additional support for said shield.

• • • • •