#264

6(b) CLEARED:

No Mfrs Identified
✓ Excepted
Mfrs Notified
Comments Processed
no longer in business

UNITED STATES GOVERNMENT

Memorandum

U.S. CONSUMER PRODUCT SAFETY COMMISSION

MAR 7 4 16 PM '78

TO : Catherine Cook, Director CEPD
Through: Theodore J. Garrish, General Counsel
Through: Margaret A. Freeston, Deputy General Counsel

DATE: MAR 1978

FROM : Harleigh Ewell, OGC

SUBJECT: Jurisdiction Over Pestolite Fly-Katcher

As requested, I have examined the attached file concerning the Pestolite FlyKatcher. It appears that the [illegible] are attracted to the device by ultraviolet light and an aromatic bait. After the insects are lured into the proximity of the device, they are blown by a fan into contact with an adhesive strip which holds them (at least) until they expire.

Since the hazard in this particular case would appear to be electrical or thermal (jamming and overheating of the drive motor), it could not be regulated under the FHSA since it is not a "toy or other article intended for use by children."

Referring to regulation under the CPSA, the article fits the general definition of "consumer product" in section 3(a)(1) of the Act. Therefore, this product may be regulated under the CPSA unless it fits into the exception for "pesticides" provided in section 3(a)(1)(D). The Federal Insecticide, Fungicide, and Rodenticide Act (FIFRA) defines "pesticide" as follows:

> "...any substance or mixture of substances intended for preventing, destroying, repelling, or mitigating any pest..." (7 U.S.C. 136(u)) (emphasis supplied).

FIFRA defines "pest" as including insects (7 U.S.C. 136(t)).

ADVISORY OPINION

264

However, as the literature for the Fly-Katcher points out, this product uses no poisons to kill the insects. Since the insects are merely trapped by an adhesive and not destroyed by a substance, the device does not contain, much less constitute, a pesticide.

The Fly-Katcher appears to be a "device" as defined in FIFRA at 7 U.S.C. 135, which includes any "instrument or contrivance intended for trapping, destroying, repelling, or mitigating insects or rodents" (emphasis supplied). However, there is no exception from the CPSA for "devices". Accordingly, the Fly-Katcher is a consumer product and may be regulated in any manner authorized by the CPSA. Although it is possible that there may be concurrent jurisdiction with EPA over the safety aspects of "devices", EPA has expressed no interest in exercising it in this particular case.

We will contact EPA to discuss whether there is a need for guidelines to be formulated concerning other similar situations that may arise in the future.

To: Catherine C. Cook

From: Mana L. Jennings

Date: 14 February 78

Subject: Commission Jurisdiction over Electric Fly-Catcher

ISSUE: Is an electric and chemical fly-catching device a pesticide or consumer product.

RECOMMENDATION: Seek formal advisory opinion from Office of General Counsel.

DISCUSSION: Section 3(a)(1)(D) of the Consumer Product Safety Act states that the term "consumer product" shall not include "pesticides (as defined by the Federal Insecticide, Fungicide, and Rodenticide Act)." FIFRA was amended by the Environmental Pesticide Control Act to include the following definitions, which are applicable in this instance:

> 7 U.S.C. §136(u): The term "pesticide" means (1) any substance or mixture of substances intended for preventing, destroying, repelling, or mitigating any pest . . . .
>
> 7 U.S.C. §136(t): The term "pest" means (1) any insect, rodent, nematode, fungus, weed, or (2) any other form of terrestrial or aquatic plant or animal life or virus, bacteria, or other micro-organism . . . which the Administrator [of E.P.A.] declares to be a pest under section 136w(c)(1) of this title [7].

I contacted E.P.A. to determine whether fly-catchers are pesticides. After some discussion with Mr. John Ulfelder, attorney in the Enforcement Brance of E.P.A. (755-1212), it appears that there may be overlapping jurisdiction in this area.

Pesticides and pesticide devices are treated similarly by the E.P.A., but are not the same by statute (although they are treated

identically in some instances). For example, pesticide devices may be pesticides if they release chemicals into the environment, but may not be pesticides when they present fire hazards. This area should be investigated and worked out between CPSC and EPA to prevent some products from being completely beyond the scope of either agency. It is possible, for example, that there could be an accommodation where pesticide devices which present fire or mechanical hazards are not pesticides and, therefore, are consumer products.

Regardless of the outcome of the jurisdictional question, perhaps we could be "rooting around" for some additional information from the firm involved in this particular case (especially in the area of what other incidents have been reported to the firm and what "supplier" the firm is so anxious to protect from further exposure -- suppose the supplier (of what?) supplies faulty component parts to other consumer products, we should know that information).

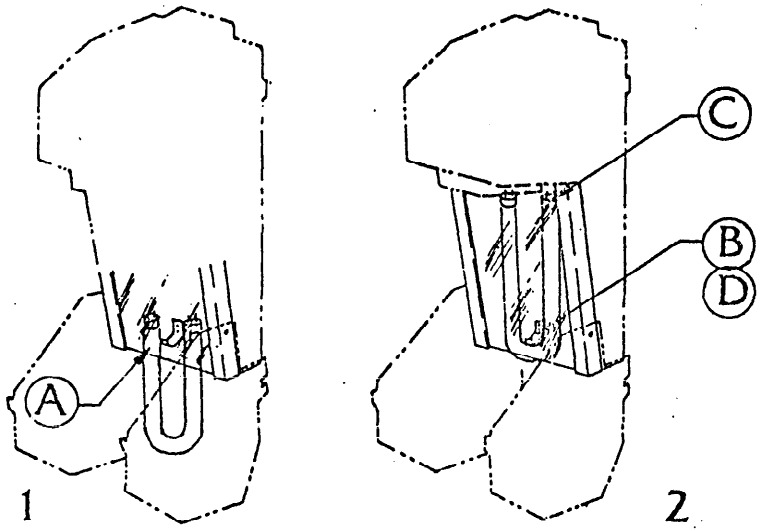

Insert lamp into unit behind lens, slide up into unit until the curve of the lamp touches the lamp retainer spring.

Depress lamp retainer spring to allow lamp to pass over.

Align lamp pins into the slots of the lamp sockets and push lamp firmly into the socket.

Slowly release lamp retainer spring to allow it to support the lamp in its proper position.

LAMP INSTALLATION

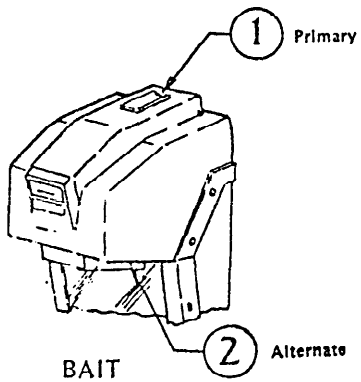

BAIT PLACEMENT

MOUNTING SCREW INSTALLATION

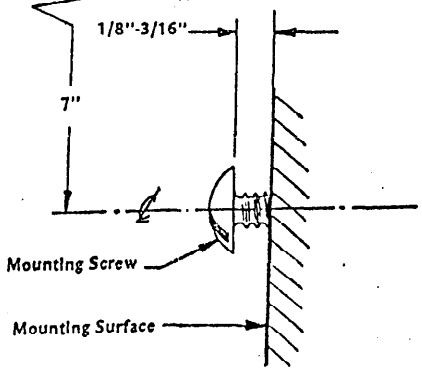

fly-katcher by Pestolite Inc. (717) 392-4121
208 Centerville Road
Lancaster, Pa. 17603
A CYTON INDUSTRIES COMPANY

Consider with S.N. 139605 11-17-77 SL Exhibit K1

fly-katcher by Pestolite

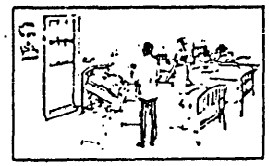

IN ANY ENCLOSED AREA WHERE FLIES ARE A PROBLEM. INSTITUTIONS, OFFICES, RECREATIONAL AREAS, ETC. . . . FLY-KATCHER will lure and kill flies quickly, quietly and without harm to the environment!

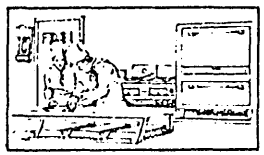

IN KITCHENS & FOOD PROCESSING PLANTS . . . FLY-KATCHER works without fouling the air. Uses no poisons or sprays of any kind.

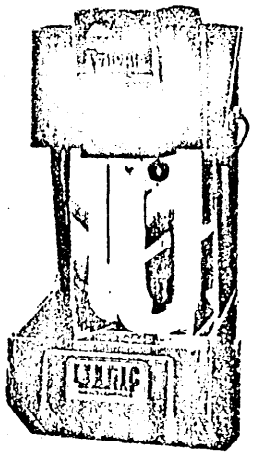

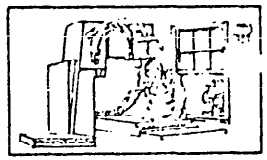

IN MILLS & MANUFACTURING PLANTS . . . employees work better, products are purer without the problem of fly contamination. FLY-KATCHER lets you get rid of flies once and for all.

IN RESTAURANTS & STORES . . . FLY-KATCHER kills flies without killing business. Unit is pleasing to the eye, customers hardly kno there, and they don't hear th pleasant sound of bugs roasting.

Owner's Manual
Model SK-4 & SK-4A

If You Like Your Unit, Tell Others
If You Don't Like It, Tell Us