#193

RECEIVED
OFFICE OF [illegible]
APR 21 10:31 AM '75
CONSUMER PRODUCT
SAFETY COMMISSION

U.S. CONSUMER PRODUCT SAFETY COMMISSION
WASHINGTON, D.C. 20207

APR 21 1975

MFR, PRVLBR NOTIFIED
✓ No comments made
Comments attached
✓ Excisions/Revisions
Firm has not requested
further notice

Mr. William Dugan
Traffic Coordinator
Champion Spark Plug Company
Box 910
Toledo, Ohio 43661

Dear Mr. Dugan:

This letter is in response to your request of February 11, 1975, for an opinion as to whether the Champion Spark Plug Igniter (CH 31566) comes within the jurisdiction of this Commission.

Dr. William Ligon of our staff contacted your office to ascertain the intended use of the igniter and was referred to Mr. Hank Phillips, Traffic Manager, and Mr. Larry Lentz. Mr. Lentz informed Dr. Ligon that the product is intended as an igniter for gas turbine aircraft engines and has no "ground" use.

Under the Consumer Product Safety Act (CPSA) (a copy is enclosed), the Commission has broad jurisdiction over "consumer products." The term "consumer product" is defined in section 3(a)(1) of the CPSA as:

> "...any article, or component part thereof, produced or distributed (i) for sale to a consumer for use in or around a permanent or temporary household or residence, a school, in recreation, or otherwise, or (ii) for the personal use, consumption or enjoyment of a consumer in or around a permanent or temporary household or residence, a school, in recreation, or otherwise..."

1

ADVISORY OPINION

Excluded from the definition of consumer product are several categories of products, including:

> "aircraft, aircraft engines, propellers, or appliances (as defined in section 101 of the Federal Aviation Act of 1958)." (Section 3(a)(1)(F))

Based upon the information you provided that the Champion Spark Plug Igniter (CH 31566) is used only in aircraft engines and has no ground use, it is the opinion of the Office of the General Counsel that this product comes within the exclusion cited above for aircraft, aircraft engines, propellers or appliances, and, therefore, is not subject to regulation under the CPSA. Please note that while this opinion reflects the most current interpretation of the law by this office, it could subsequently be changed or superseded by the Commission.

Thank you very much for your interest in the Consumer Product Safety Commission. Please let us know if we may be of further assistance to you.

Sincerely,

Michael A. Brown
General Counsel

Enclosure

14 FEB 1975 - 838

CABLE ADDRESS "CHAMPION"

Champion Spark Plug Company

P. O. BOX 910, TOLEDO, OHIO · U.S.A. 43661
TELEPHONE: AREA CODE 419 · 535-2567

February 11, 1975

Consumer Product Safety Commission
7315 Wisconsin Avenue, N.W.
Washington, D.C. 20016

Gentlemen:

Safety Commission Ruling on Champion Spark Plug Igniter

Enclosed is a print of our CH 31566 Igniter. The Beryllium Oxide Insulator is labeled and outlined in red.

This material has been sintered and glazed, and is not poisonous in its present form. However, poisonous fumes will be emitted if it is subjected to temperatures above 2000° F. We understand that government agencies have classified this material as a Class B Poison.

We contacted the Office of the Secretary of Transportation and it is their opinion that the insulator is not a Class B Poison. They suggested we contact you for your opinion in this matter.

Please address your reply to my attention and if you have any questions, please call me at (419) 535-2365.

Very truly yours,

CHAMPION SPARK PLUG COMPANY

William Dugan

Traffic Coordinator

W. F. Dugan/br

Enclosures

I called 2/19. Hank Phillips, Traffic Mgr

He called on "Engineering" Larry Lentz responded. Th.

i on Igniter for gas turbine engine for aircraft.

3

awda

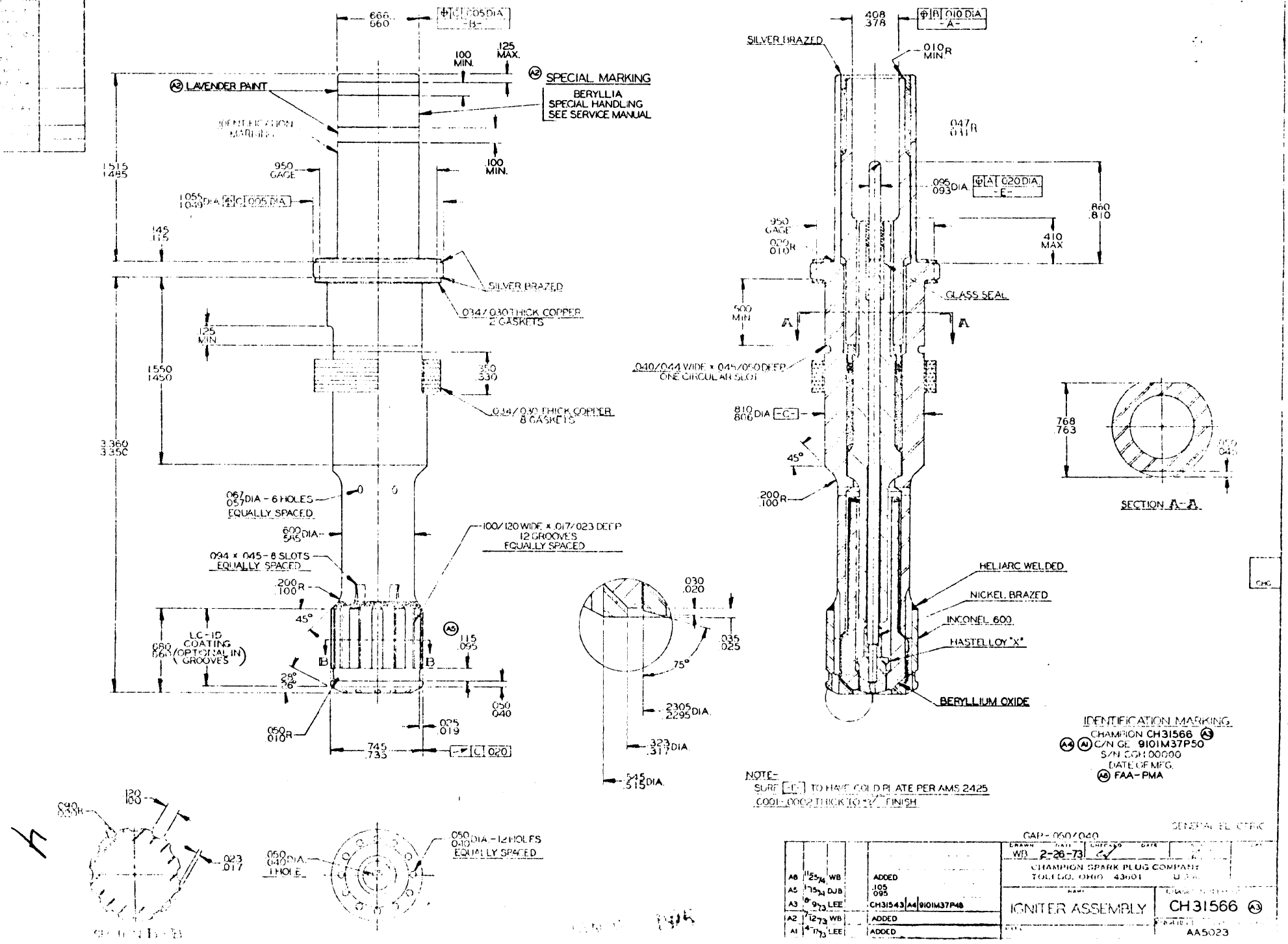

SPECIAL MARKING
BERYLLIA
SPECIAL HANDLING
SEE SERVICE MANUAL
LAVENDER PAINT
IDENTIFICATION MARKING
SILVER BRAZED
.034/.030 THICK COPPER 2 GASKETS
.034/.030 THICK COPPER 8 GASKETS
.067/.057 DIA - 6 HOLES EQUALLY SPACED
.100/.120 WIDE x .017/.023 DEEP 12 GROOVES EQUALLY SPACED
.094 x .045 - 8 SLOTS EQUALLY SPACED
LC-1D COATING (OPTIONAL IN GROOVES)
.050/.040 DIA - 12 HOLES EQUALLY SPACED
.050/.040 DIA 1 HOLE
SILVER BRAZED
GLASS SEAL
.040/.044 WIDE x .045/.050 DEEP ONE CIRCULAR SLOT
HELIARC WELDED
NICKEL BRAZED
INCONEL 600
HASTELLOY "X"
BERYLLIUM OXIDE
SECTION A-A
IDENTIFICATION MARKING
CHAMPION CH31566
C/N GE 9101M37P50
S/N CGH 00000
DATE OF MFG.
FAA-PMA
NOTE-
SURF -E- TO HAVE COLD PLATE PER AMS 2425
.0001-.0002 THICK TO #2 FINISH
GAP - .050/.040
DRAWN WB 2-26-73
CHAMPION SPARK PLUG COMPANY
TOLEDO, OHIO 43601
IGNITER ASSEMBLY
CH31566
AA5023

OFFICE OF THE SECRETARY OF TRANSPORTATION
WASHINGTON, D.C. 20590

FEB 4 1975

Mr. William Dugan
Champion Spark Plug Company
P. O. Box 910
Toledo, Ohio 43661

Dear Mr. Dugan:

Mr. W. J. Biron, FAA Flight Standards District Office in Ypsilanti, Michigan, asked us to reply to your January 13, 1975, letter to him with regards to the hazard classification of your CH 31566 Igniter. The question was whether the Beryllium Oxide insulator made the item a Class B Poison.

After studying the drawing and considering the fact that the Beryllium Oxide is sintered and glazed, it is our opinion that the item would not be a Class B Poison for transportation purposes.

I would suggest that you also consult the Consumer Product Safety Commission about this item.

Sincerely,

A. I. Roberts, Chief
Regulations Division
Office of Hazardous Materials

5