GUIDELINES FOR ENTRAPMENT HAZARDS:

Making Pools and Spas Safer

U.S. Consumer Product
Safety Commission
Washington, DC 20207

Pub. No. 363
009801

U.S. CONSUMER PRODUCT SAFETY COMMISSION
WASHINGTON, D.C. 20207

Dear Colleague:

Pools and spas are places we use for sports, recreation and exercise. They should be as safe as possible. Unfortunately, each year people are injured at public and private pools and spas.

The good news is that we know how to eliminate many of the hazards that commonly result in injury or death. CPSC created these pool and spa guidelines to help identify and eliminate dangerous entrapment hazards.

The guidelines are intended for use in building, maintaining and upgrading both public and private pool and spa facilities. Some of the information is quite technical and will be of interest primarily to the pool or spa professional.

But much of the information is of value for the general public concerned with promoting greater safety at public facilities or at their own homes. Every individual who has any responsibility for the safety of adults or children at a pool, wading pool, spa or hot tub should read the "Pool and Spa Entrapment Hazards Checklist" on p. 15 in the guidelines.

Let's work together to make America's pools and spas as safe as we can.

Sincerely,

Ann Brown

Ann Brown
Chairman

TABLE OF CONTENTS

Page No.

Part

1. Introduction..... 1

2. Why the Guidelines Were Developed.....2
   2.1 Pool and Spa Entrapment Injuries.....2
   2.2 Codes and Standards.....3

3. Explanation of Guidelines 4
   Guideline #1..... 4
   Guideline #2.....9
   Guideline #3.....10

4. Guidelines for Addressing Potential Entrapment Hazards.....13

5. Pool and Spa Entrapment Hazards Checklist.....15

6. References.....17

APPENDICES

General Information .....Appendix A

Applicable Standards.....Appendix B

Glossary.....Appendix C

Part 1

INTRODUCTION

These guidelines provide safety information that will help identify and address potential entrapment hazards in swimming pools, wading pools, spas, and hot tubs. They address the hazards of evisceration/disembowelment, body entrapment, and hair entrapment/entanglement. These guidelines are intended for use in building, maintaining and upgrading public and private pools and spas. They are appropriate for use by parks and recreation personnel, public health organizations, equipment purchasers and installers, owners, inspection officials, and others who are responsible for pool and spa safety.

The U.S. Consumer Product Safety Commission (CPSC) identified the need for guidelines during a Chairman's Roundtable on Swimming Pool and Spa Entrapment, held in July 1996 at the CPSC headquarters. The CPSC has issued these guidelines as recommendations; they are not intended as a CPSC standard or mandatory requirement.

These guidelines are based on information provided to the CPSC by the National Spa & Pool Institute (NSPI), the National Swimming Pool Foundation (NSPF), swimming pool and spa equipment suppliers, maintenance firms, state health officials and voluntary standards organizations. Appendix A contains general information and descriptions on the layout, design, installation and maintenance for swimming pools and spas. Several voluntary standards are currently in existence for pool and spa construction and equipment. These are referenced in Appendix B. These voluntary standards contain more technical requirements and specifications than CPSC's guidelines and are primarily intended for use by designers, builders, equipment installers, and manufacturers.

In these guidelines, the term "public pool and spa" refers to facilities intended for use by the public in such areas as parks, hotel/motel facilities, institutions, multiple family dwellings, resorts and recreational developments, and other areas of public use. The term "residential pool and/or spa" refers to a pool or spa located within the confines of a residential property and intended for the private use of the owner and/or the home's occupants. A glossary of other terms used in these guidelines and/or by pool professionals can be found in Appendix C.

The Commission believes that these guidelines can reduce the possibility of evisceration, body entrapment and hair entrapment/entanglement, which can have life-threatening consequences. However, these guidelines do not contain all possible approaches for addressing the identified hazards. Other alternatives, not presented here, may be acceptable.

Part 2

WHY THE GUIDELINES WERE DEVELOPED

Although current codes and standards for pools and spas contain requirements to prevent evisceration, body entrapment, and hair entrapment/entanglement, incidents and deaths continue to occur.

2.1 Pool and Spa Entrapment Injuries

Evisceration/Disembowelment

Fifteen incidents of evisceration/disembowelment were reported to CPSC between 1980 and 1996. CPSC is not aware of any associated deaths, but the injuries are irreversible and have a devastating effect on the victim's future health and development.

The typical scenario leading to disembowelment involves a young child, 2 to 6 years old, who sits on the uncovered drain of a public wading pool. The incidents occur primarily in public wading pools where a floor drain cover is broken or missing, although there is an indication that one case may have involved an open top skimmer. Young children have access to the bottom drain in wading pools because of the shallow water. Generally, drains are equipped with anti-vortex covers whose domed shape prevents sealing of the pipe opening by the body. However, if the cover or grate is unfastened, broken or missing, the potential for an incident exists. When the child's buttocks cover the drain opening, the resulting suction force can eviscerate the child through the ruptured rectum. A small change in pressure is sufficient to cause such injury extremely quickly (Ref. 2).

Body Entrapment

CPSC is aware of nine cases of body entrapment, including seven confirmed deaths, between January 1990 and May 1996. The deaths were the result of drowning after the body, or a limb, was held against the drain by the suction of the circulation pump (Ref. 1). Six of the incidents occurred in spas, two of the incidents occurred in swimming pools and one occurred in a wading pool. In one case, a 16-year-old girl became trapped on a 12" by 12" flat drain grate in a large public spa and died.

These incidents primarily involve older children (8 to 16 years of age), with an average age of about 10 years. In some of the cases, it appears that the child was playing with the open drain, including inserting a hand or foot into the pipe, and then became trapped by the resulting suction. There are potentially many different circumstances of design and maintenance that can produce the conditions for the hazard. Body entrapment cases can occur in either pools or spas. The scenarios suggest that any open drain, or any flat grating that the body can cover complete-

ly, coupled with a plumbing layout that allows a buildup of suction if the drain is blocked, presents this hazard. Depending upon the layout, the result may be a single bottom drain becoming the sole inlet to the pump, and this condition becomes dangerous if there is an inadequate or missing drain cover.

Hair Entrapment/Entanglement

CPSC is aware of 30 reported incidents in spas and hot tubs since 1990, of which 10 resulted in drowning deaths, as a result of long hair becoming entangled in the drain grates (Ref. 1).

Typically, these incidents involve females with long, fine hair, who are underwater with their head near a suction inlet. The water flow into the inlet sweeps the hair into and around the outlet cover, and the hair becomes entangled in and around holes and protrusions in the cover. Entrapment occurs because of the tangling, and not necessarily because of strong suction forces. These cases most often occur in spas, including hot tubs.

Since about 1982, industry voluntary standards for spas and hot tubs require that drain covers be certified for use at a maximum flow rate. It is difficult, however, to determine actual flow rates in custom-built spas, and thus to know if spas are equipped with the proper fitting to prevent hair entanglement. Fittings available on the market since 1982 are believed to be manufactured to provide anti-vortex protection (to prevent body entrapment) and hair entrapment/entanglement protection.

2.2 Codes and Standards

Several voluntary standards currently in existence for swimming pool and spa construction and equipment are referenced in Appendix B. The requirements in these standards may have been adopted by state or local building codes. Check with your local authorities to determine what the specific requirements are in your community. Many communities also require inspections of new and existing facilities before they are opened to the public. These inspections involve the general pool filtration system (pumps, filters, skimmers), drain covers as well as the bathhouse and concession facilities. Periodic inspections during the operating season of the facility may also occur to ensure that the facility is properly operated and maintained according to local regulations.

While the voluntary standards address new construction, these guidelines were developed to address potential entrapment hazards that primarily exist with older pools and spas that were built prior to the effective date of the relevant standard.

Part 3

EXPLANATION OF GUIDELINES FOR ADDRESSING POTENTIAL ENTRAPMENT HAZARDS

Guideline #1

If the pool, spa, or hot tub has a single drain, with or without a skimmer, consider taking one or more of the following actions:

a. Rework the drain system to include a minimum of two drains per pump. This option should be strongly considered for wading pools.

b. If applicable, lock the valves for the drain and skimmer in the open position to prevent the drain from becoming a sole source of suction.

c. Install a secondary back-up system (e.g., an intervening switch) which shuts down the pump when a blockage is detected.

Information on Guideline #1

Option a:

Rework the drain system to include a minimum of two drains per pump.

Rationale for Option a: Young children can easily access the drain in public wading pools because of the shallow water depth of these pools. Young children may be attracted to the water flow around the drain. If the drain cover is missing or broken, the potential for a disembowelment injury exists.

Information on Option a: There are two main approaches to address option a. These are use of multiple drains or channels, and gravity feed or vent stacks. These are discussed below:

Multiple Drain and Channel Systems

Your pool maintenance professional may recommend completely reworking the suction drain system. This may involve a major construction effort around the drain section of the pool and could involve providing a second suction drain or a larger suction area to prevent entrapment by an existing single drain configuration. **This option should be strongly considered in the case of wading pools because of the ease with which young children have access to the drain**

cover. Additionally, a channel type drain could be installed in such a way as to prevent the "trapping off" or blockage of the main drain.

The principle behind installing a multiple drain system is to prevent a single drain opening from becoming the sole inlet to the suction side of the pump. The installation of at least an additional drain effectively divides the suction between the drains, provided the piping is the same diameter and the "tee" is placed midway between the drains (Figure 4a in Appendix A).

The state of North Carolina currently requires a minimum of two main drains per pump in the construction of new wading pools and is requiring that existing wading pools be retrofitted to meet a two outlet per pump minimum requirement. The state is accepting a single drain and skimmer line combination as long as neither can be isolated. A point of contact for further information on the implementation and success of this requirement is:

James Hayes of the N.C. *Department of Environmental Health and Natural Resources*, (919) 715-0924.

Alternatively, a channel type drain could be installed in such a way as to prevent the "trapping off" or blockage of the main drain (Figure 4b in Appendix A). The channel, possibly retrofitted onto either or both sides of a 12" x 12" grate, would provide a larger surface area to maintain the desired flow without creating an entrapment hazard since it would be difficult to completely seal or trap off. CPSC is aware of a limited number of facilities which incorporate this kind of design. The grating incorporates a "snap out" feature which addresses the hazard associated with hair entrapment/entanglement.

Assessment of Multiple Drain and Channel Systems

Either a multiple drain or channel system can greatly reduce the likelihood of body entrapment and subsequent drowning. In tests conducted by the National Swimming Pool Foundation (NSPF) on a multiple drain system, preliminary results indicate that no vacuum was available at the blocked drain. The lack of an appreciable vacuum would eliminate the body and hair entrapment injuries and deaths associated with suction at the drain outlets. The effectiveness of these proposals against disembowelment injuries is not as clearly understood because of the lack of data surrounding the pressure differential required to cause such injury and the duration of exposure to the available suction. The disembowelment injuries are believed to occur "almost instantaneously" at a small pressure differential. Whether that small differential is present in a multiple drain system has not yet been established. The incorporation of a channel, which cannot be completely sealed by a single person, may be the best approach in preventing disembowelment injuries since the child would not be subjected to the full suction of the pump, unless the channels became blocked.

Gravity Feed and Vent Stack Systems

One system, currently in use in Florida, is a gravity feed system. A separate tank collects water by means of gravity and the suction pumps are then plumbed to the tank (Figure 5a in Appendix A). This method of circulating, filtering, and/or heating and jetting the pool water removes the direct suction from the pool main drains and skimmers and applies it to the tank, which is generally not occupied. A point of contact for further information on the implementation of this system is:

Robert S. Pryor of the *Florida Department of Health and Rehabilitative Services*, (904) 487-0004.

The use of a vent stack or stacks may remove suction from the main drain or skimmer in case a blockage should occur. The stack would be connected to the main suction line between the drain and the pump and would be open to the atmosphere (Figure 5b in Appendix A). The laws of physics require the vent stack to fill with water to a level equal to that of the pool. Should the drain become clogged or obstructed, the pump begins to draw on the water from the vent stack until air is introduced to the system and the suction is broken. A point of contact for further information on the implementation of this proposal would be:

Carvin DiGiovanni, of the *National Spa and Pool Institute*, (703) 838-0083

Assessment of Gravity Feed and Vent Stack Systems

The use of these gravity systems may reduce the likelihood of suction entrapment and subsequent drowning. The effectiveness of these proposals against disembowelment injuries is not known because of the lack of data surrounding the pressure differential required to cause such an injury. There are some additional concerns surrounding the use of the gravity feed and vent stack systems. It may be difficult to keep the collector surge tank and the vent stack system clean of algae and other biological contaminants. Also, there would be no indication if the vent stack system were to became blocked. Should the vent become obstructed, the safety system would be rendered ineffective.

Option b: If applicable, lock the valves for the drain and skimmer in the open position to prevent the drain from becoming a sole source of suction.

Rationale for Option b: Valves to the skimmers should *always* remain in the open position to ensure that water flow from the pool and/or spa is never solely from the main drain.

Information on Option b: There are various configurations for plumbing a pool and/or spa as shown in Figures 1 and 2 of Appendix A. Configurations which manifold or valve the skimmers, main drain, and vacuum lines (if provided) present a potential risk for creating a single isolated source of suction. Unless the pool is being vacuumed, at which time all but the vacu-

um valve are closed, the skimmer and main drain valves should remain in the open position. On motor-operated valve systems, these configurations can most likely be obtained with the push of a button. However, once the vacuuming operation is completed, the valves need to be returned to the normal operating position.

Assessment of Option b: While maintaining the valves in an open position to prevent isolation of single suction sources is desirable, there is no guarantee that the valves will remain in the "opened" position. As seen in many of the reported incidents, proper maintenance, or lack thereof, plays an important role in the entrapment scenario. Unless there is a locking mechanism (padlock, key, etc) that requires an intentional effort to reposition the valves, and the utility room housing the valves remains locked, the potential to reconfigure the water flow from the pool into a single suction source exists.

Option c: Install a secondary back-up system (e.g., an intervening switch) which shuts down the pump when a blockage is detected.

Rationale for Option c: Given the resources required to reconstruct the drain system, a secondary system that works with existing configurations may be desirable until the time and funds are available to make permanent renovations.

Information on Option c: A secondary back-up system may consist of an anti-vortex cover with an ASME/ANSI A112.19.8M rating (Appendix B), a large grate (exceeding 12"x 12") and/or some type of channeling too large to be sealed by a human body, a sensing device that detects an increased suction associated with blockage, or any combination of these. Systems are available that can sense a small increase in suction at the inlet to the pump and shut the power to the pump. By sensing an increase in vacuum, the devices trip electrical relays to the pump, which then removes the suction on the line.

Another form of intervention, which some states and the National Electrical Code (NEC) are considering, is an emergency cut-off switch located in view of the pool or spa. These switches are generally located in the electrical equipment room and are in the line-of-sight of the apparatus. A proposed revision to the NEC would require a cut-off switch in the line-of-sight of the pool or spa, possibly as close as 10 feet which would cut the power to the pump(s) in a life threatening situation. ***NOTE:*** *A cut-off switch should not be considered in lieu of the solutions previously discussed and should only be considered as a solution to be used in combination with any of the alternatives previously mentioned.*

Assessment of Option c: In the case of entrapment, the removal of the suction in the line can relieve the forces causing the entrapment, and therefore make rescue possible. However, if there is a check valve in the line that prevents the backflow of water, it may also prevent the relief of the suction and the vacuum forces may remain in place and impede rescue efforts.

In the case of disembowelment, as with the dual drain system, the amount of time between sensing the restricted flow, the shutdown of the pump(s), and the ultimate relief of the suction forces at the source of the blockage may not be fast enough to eliminate all disembowelment

injuries. The CPSC reviewed a device that senses interruptions in flow through the drain. The CPSC concluded that the device readily responds (within 1 second) to such interruptions and should therefore be effective in preventing entrapment drowning (not hair entanglements). However, due to the lack of physiological data it can not be concluded that the device will eliminate all disembowelments (Ref 2). The CPSC does believe, however, that injuries will be prevented simply because a child playing in the vicinity of the open drain fitting is likely to interrupt the flow and activate the switch before completely sealing the fitting. Further, CPSC believes this type of a device, while not a substitute for the anti-vortex covers required in the voluntary standards, is a reasonable back-up system in the event of improper maintenance or tampering with the drain cover. These intervention devices should be considered as an adequate retrofit to existing pools and spas where a single drain, or a drain that can become single upon activation of valves, exists. While it is understood the multiple drain configuration is a superior solution, a pool/spa owner is more likely to install an intervening system rather than renovate the pool/spa.

The proposal before the NEC to require an emergency cut-off switch near the swimming area should be effective in removing the suction force created by energized pumps. Because the activation of the cut-off switch requires the presence of at least one other person when the incident occurs, this option is not a satisfactory substitute for the other secondary solutions mentioned, although it is desirable in tandem with some other solution. The existence of a check valve in the line may prevent the relief of the suction and impede rescue efforts. Again, as with the multiple drain or sensing device proposals, the effectiveness of the switch to prevent disembowelment injuries cannot be determined due to the lack of data surrounding the pressure differential required to cause such an injury and the time required to activate the emergency cut-off switch.

Guideline #2:

If the drain cover is not an anti-vortex cover and/or does not display the appropriate markings for maximum flow rate and labeling that indicate it has been tested to the ASME/ANSI voluntary standard, shut down the pump and replace the cover.

Information on Guideline #2

Rationale for Guideline #2: A qualified pool professional must determine if the flow rate through the fitting is adequately matched to the actual flow rate of the spa, hot tub or pool. If not, changes must be made to achieve this match.

Information on Guideline #2: Installers, owners, maintenance personnel, and inspectors should ensure that drain covers are manufactured and installed according to the latest specifications set forth by the ASME/ANSI A112.19.8M voluntary standard (Appendix B) for suction fittings. The standard requires that the cover material be tested for structural integrity. The cover also must be tested for hair entrapment/entanglement potential and is required to display a flow value in gallons per minute (GPM) that indicates the maximum flow rate at which the cover has been approved. The use of a cover under conditions where the maximum allowable flow rate is exceeded can lead to entrapment hazards. Portable spas (including hot tubs) manufactured after 1982 are likely to have drain suction fittings that are appropriately sized for the flow rate. Spas built on site may not have controls to guarantee that the suction cover is correctly matched with the pump to provide a rated flow appropriate for that cover. One possible response would be to provide a flow control valve that a qualified pool maintenance professional could set during installation to assure that the rated flow for the drain cover is not exceeded. During regular maintenance, the flow can be checked, and adjusted as necessary. Should a pump need to be replaced, the flow can again be determined and adjusted as needed.

Assessment of Guideline #2: A pool professional should inspect spas or hot tubs that were manufactured prior to 1982, or if there is a question about the drain cover currently installed. The pool professional should determine if the covers meet the safety requirements outlined in the appropriate ANSI/NSPI standard (Appendix B).

More information on the ASME/ANSI standard and the testing procedures can be obtained by contacting:

Dave Allen, *Chairman of the ASME/ANSI Subcommittee*, (714) 974-1920.

Information on the ANSI/NSPI standard can be obtained from:

Carvin DiGiovanni, *National Spa and Pool Institute*, (703) 838-0083.

Guideline #3

Develop a comprehensive maintenance program for each facility. A checklist is provided on page 15 to help implement this program. The maintenance program should address the following:

a. If the drain cover or grate is cracked or broken, immediately shut down the pump(s) and replace the grate or cover.

b. The covers should be anchored in accordance with the manufacturer's specifications and supplied parts (e.g., non-corrosive fasteners).

c. The practice of color coding and labeling plumbing and equipment should be incorporated into all facilities. The most important aspect of a labeling/coding program is to provide the location, identification, and marking of the On/Off switch for the circulation pump(s).

Information on Guideline #3

Rationale for Guideline #3: Inadequate maintenance of equipment and drain covers can lead to entrapment injuries. Because the safety of swimming pools, wading pools, and spas depends on good inspection and maintenance, the manufacturer's maintenance instructions and recommended inspection schedules should be strictly followed. Generally, all equipment, skimmers and drain covers should be inspected frequently for corrosion, deterioration, missing or broken parts, or any other potential hazards.

Information on Guideline #3: The frequency of thorough inspections will depend on the type of equipment to be inspected and the amount of its use. Inspectors should give special attention to moving parts, components that can be expected to wear, and drain covers. Trained personnel should conduct all inspections. Some manufacturers supply checklists for general and/or detailed inspections with their maintenance instructions. These should be used. A general checklist that may be used as a guide for frequent routine inspections of swimming facilities is included in these guidelines.

When installed and secured in accordance with the manufacturer's instructions, no fasteners used to affix drain covers should loosen or be removable without the use of tools. In addition, all fasteners should be corrosion resistant and should minimize the likelihood of corrosion to the materials they connect.

Public pool equipment rooms may color code the plumbing according to local code requirements. The coding and labeling can be helpful during maintenance procedures or during times of urgency, especially to those not familiar with the equipment.

Assessment of Guideline # 3: Inspections alone do not constitute a comprehensive maintenance program. All hazards or defects identified during inspections should be repaired prompt-

ly before opening the facility to the public. All repairs and replacements of equipment parts should be completed in accordance with the manufacturer's instructions.

A summary of these guidelines as well as a checklist to help identify potential entrapment hazards is provided on the following pages. It is suggested that these pages be prominently posted as a constant reminder to the pool staff to regularly check for potentially hazardous conditions. The checklist in these guidelines addresses potential entrapment hazards, but is not intended to provide a complete safety evaluation of equipment design and layout. Complete documentation of all maintenance inspections and repairs should be retained, including the manufacturer's maintenance instructions and any checklists used. A record of any accidents and injuries reported to have occurred at the facility should also be collected. This will help identify potential hazards or dangerous features that warrant attention.

CUT HERE

Part 4

GUIDELINES FOR ADDRESSING POTENTIAL ENTRAPMENT HAZARDS

Guideline #1

If the pool, spa, or hot tub has a single drain, with or without a skimmer, consider taking one or more of the following actions:

a. Rework the drain system to include a minimum of two drains per pump. This option should be strongly considered for wading pools.

b. If applicable, lock the valves for the drain and skimmer in the open position to prevent the drain from becoming a sole source of suction.

c. Install a secondary back-up system (e.g., an intervening switch) which shuts down the pump when a blockage is detected.

Guideline #2:

If the drain cover is not an anti-vortex cover and/or does not display the appropriate markings for maximum flow rate and labeling that indicate it has been tested to the ASME/ANSI voluntary standard, shut down the pump and replace the cover.

Guideline #3

Develop a comprehensive maintenance program for each facility. A checklist is provided on page 15 to help implement this program. The maintenance program should address the following:

a. If the drain cover or grate is cracked or broken, immediately shut down the pump(s) and replace the grate or cover.

b. The covers should be anchored in accordance with the manufacturer's specifications and supplied parts (e.g., non-corrosive fasteners).

c. The practice of color coding and labeling plumbing and equipment should be incorporated into all facilities. The most important aspect of a labeling/coding program is to provide the location, identification, and marking of the On/Off switch for the circulation pump(s).

CUT HERE

Part 5: Pool and Spa Entrapment Hazards Checklist

Pool Name: Location:	Date: Completed by: Pool Builder:

Items to be Checked in Filter Room and Pool Before Filling and After Periodic Maintenance and Cleaning Procedures
❒ Proper suction drain covers installed and inspected for breakage (main & wading pools)
❒ Suction drain covers firmly and properly affixed using manufacturer's recommended parts
❒ Proper return covers installed (main & wading pools)
❒ Skimmers checked (baskets, weirs, lids, & flow adjustors) for blockage
❒ All skimmer throats checked for blockage (main & wading pools)
❒ All valves and filter lines labeled and functional
❒ Vacuum covers or fittings in place (if applicable)
❒ Location of the On/Off switch to circulation pump clearly identified
❒ On/Off switch to circulation pump clearly labeled
Daily Checklist
❒ Main drain, vacuum, inlet covers and/or fittings in place, secured and unbroken (**hourly**) (main & wading pools)
❒ Skimmers checked (baskets, weirs, lids & flow adjustors) for blockage (**hourly**) (main & wading pools)
❒ Warning/alert signs in place around the pool with emergency instructions and phone numbers
❒ On/Off switch to pump clearly labeled and location of pump clearly identified

Part 6

REFERENCES

1. CPSC Memorandum to Troy Whitfield, “Hair Entanglement, Entrapment, and Disembowelment Associated with Spas, Swimming Pools, and Wading Pools Since January 1, 1990,” William Rowe, EHHA, October 25, 1996.

2. CPSC Memorandum to Ronald L. Medford, “Assessment of the Pool Pump Cutoff Device Presented by David Stingl,” Roy W. Deppa, P.E., Suad Nakamura, PhD., and William Rowe, March 12, 1996.

3. American National Standards Institute/National Spa & Pool Institute (ANSI/NSPI-1), “Standard for Public Swimming Pools,” Approved February 18, 1991 by ANSI.

4. American Society for Mechanical Engineering/American National Standards Institute (ASME/ANSI A112.19.8M - 1987), “Suction Fittings for Use in Swimming Pools, Wading Pools, Spas, Hot Tubs, and Whirlpool Bath Tub Appliances.”

5. Underwriters Laboratories Inc., (UL 1563), “Electric Spas, Equipment Assemblies, and Associated Equipment,” November 30, 1992.

Appendix A

GENERAL INFORMATION

TABLE OF CONTENTS

Page No.

A1. General Description 20
A1.1 Layout & Design 20
A1.2 Equipment 20

A2. Installation & Maintenance 21
A2.1 Plumbing 21
A2.2 Drain Covers 21
A2.3 Maintenance 21

A3. Manufacture and Installation 25

A4. Hazard Identification, Resolution and Retrofitting 26

LIST OF FIGURES

Figure 1. Some Typical Layouts for Pool Plumbing 22
Figure 2. Some Typical Layouts for Spa Plumbing 23
Figure 3a. Anti-Vortex Cover Design 24
Figure 3b. Anti-Vortex Cover Design 24
Figure 3c. Suction Drain Cover 24
Figure 4a. Dual Drain System 27
Figure 4b. Channel System 27
Figure 5a. Gravity Feed Suction Relief System 28
Figure 5b. Vent System Suction Relief 28
Figure 6. Diagram of an Intervention Device 29

A1. GENERAL DESCRIPTION

A1.1 Layout and Design

Generally, public facilities provide separate swimming and wading pools. Wading pools afford infants, toddlers and pre-schoolers with a calm, shallow environment, away from the activities of the older, more established swimmers. Wading pools are generally shallow, ranging from about 6 inches to 12-18 inches in depth. The swimming pool, on the other hand, usually starts at about 2 to 3 feet in depth and can reach depths of 8 to 12 feet, depending upon the presence of diving boards. Because of the unique requirements and use of these two types of pools, in most cases, the equipment needed to circulate, filtrate and chlorinate the water consists of two separate, completely independent systems. The systems may or may not be located in the same equipment room.

Most residential pools and spas are smaller than public facilities because of use and space requirements and therefore use a single pump to circulate, filtrate and chlorinate the water. Where both a pool and spa are present, the system usually incorporates either multiple valves or a multiport valve to divert the water to accomplish various pool-related functions.

By arranging the valves (or the multiport valve setting) in various positions, the pool and/or spa can be drained, backwashed, normally filtered, or filtered before draining. The filter can be bypassed to obtain maximum circulation, or the valve can be closed by simply turning the handle. Additionally, spas normally incorporate a second pump or blower which provides forced air through holes in the floor, bubbler ring or hydrojets in the spa to create a high-velocity, turbulent stream of air-enriched water.

A1.2 Equipment

The equipment room houses the major components needed for the correct and healthy operation of the facility. The major components are a centrifugal pump, a filter, and a chlorinator or brominator. At facilities where spas exist, an air blower and a heater may also be present in the equipment room. The inlet side of the pump is attached to the main drain and skimmer plumbing lines, and removes water from the pool or spa. The rotating impeller creates pressure in the water and forces the water through the discharge connection back to the pool or spa.

The skimmers are located along the wall of the pool or spa and are used as a first stage filter to catch large floating debris. A basket or strainer within the skimmer holds the debris until it can be emptied. The flow of water through the skimmer and main drain is pumped through either a filter element, sand, or diatomaceous earth to remove any undissolved or suspended particles from the water. As the water is pumped back into the pool, it is treated with either Bromine (Br_2) or Chlorine (Cl_2) to chemically disinfect the water and eliminate any harmful bacteria.

If there is a spa at the facility, the equipment room would house a heater through which the water is pumped to be warmed to the desired temperature. Some spas also incorporate an air blower which injects air into the water stream to provide relaxing, therapeutic effects.

A2. INSTALLATION AND MAINTENANCE

A2.1 Plumbing

There are various approaches to plumbing a swimming pool, wading pool, and/or a spa. State or local codes may dictate the method employed by the contractor. Several plumbing options are depicted in Figure 1. As seen in Figure 1a, the main drain may be plumbed in parallel with the skimmer line so that a single pump provides the needed suction to properly filter the entire pool. In Figure 1b, the skimmer, main drain, and vacuum lines are valved (manifolded) at the pump so that the suction lines can be individually opened or closed. Figure 1c is similar to Figure 1b except that separate pumps that may or may not be tied together service the skimmer and main drain lines. Figure 2 shows some typical design options associated with spas. Notice that several pumps may be used in conjunction with air blowers to create the optimal bubbling effect in a spa, hot tub or whirlpool.

Public pool equipment rooms may color code the plumbing according to local code requirements. The coding and labeling can be helpful during maintenance procedures or during times of urgency, especially to those not familiar with the equipment. The pool designer's layout and installation diagrams, and any other materials generated concerning the plumbing installation, should be kept on permanent file.

A2.2 Drain Covers

There are two types of main drain covers: the grate and the anti-vortex cover.
Figure 3 depicts several of these covers. When properly installed, the covers should withstand the maximum anticipated forces generated by active use. Secure anchoring of the main drain cover and other suction ports is important in preventing suction-related injuries.

A2.3 Maintenance

Inadequate maintenance of equipment and drain covers can lead to pool injuries. Because the safety of swimming pools, wading pools, and spas depends on good inspection and maintenance, the manufacturer's maintenance instructions and recommended inspection schedules should be strictly followed. Generally, all equipment, skimmers and drain covers should be inspected frequently for corrosion, deterioration, missing or broken parts, or any other potential hazards.

FIGURE 1a. Main Drain and Skimmer Line

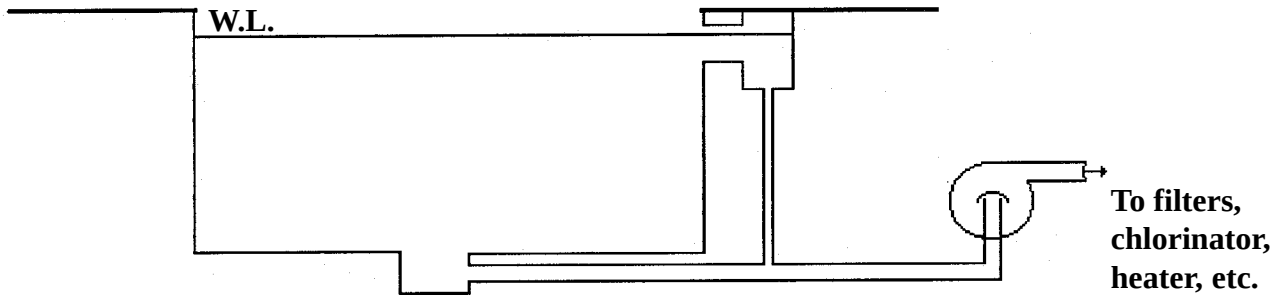

FIGURE 1b. Main Drain, Skimmer and Vacuum Lines

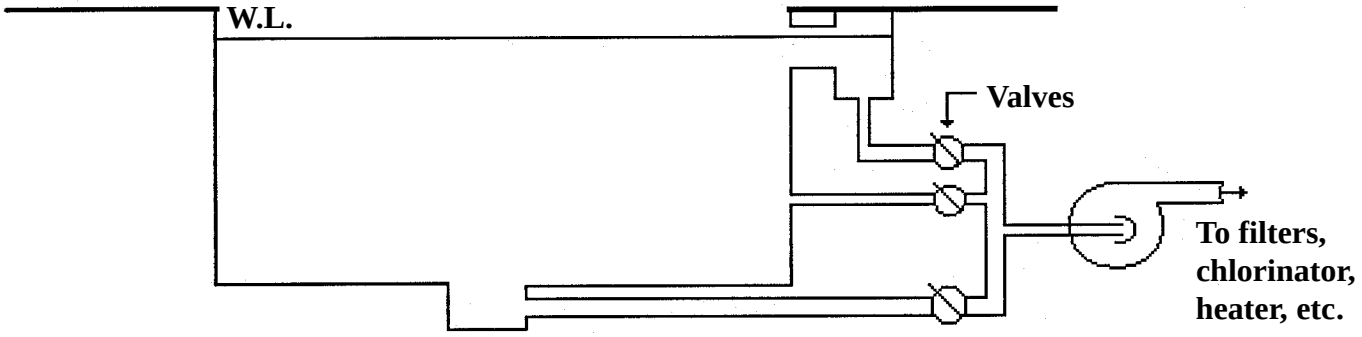

FIGURE 1c. Main Drain and Skimmer with separate pumps

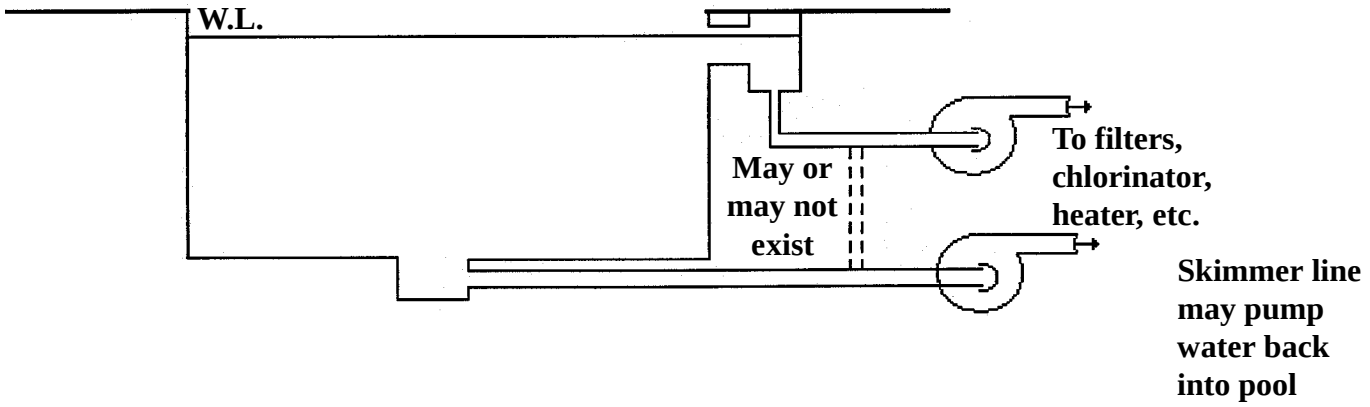

FIGURE 2a. Single Main Drain Configuration

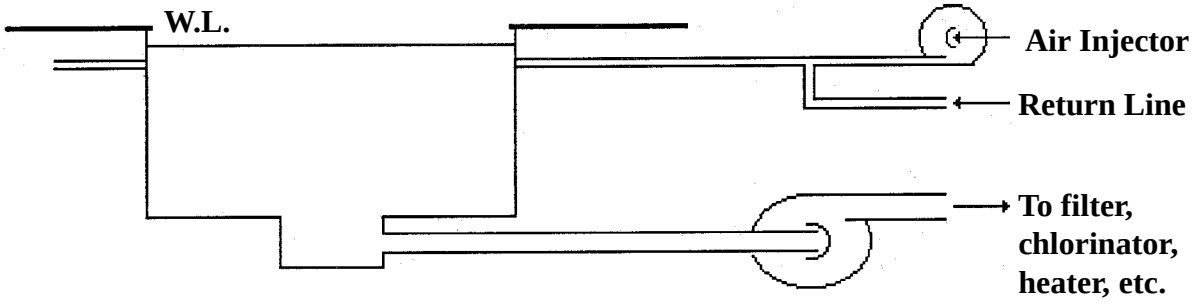

FIGURE 2b. Multiple Drain Configuration

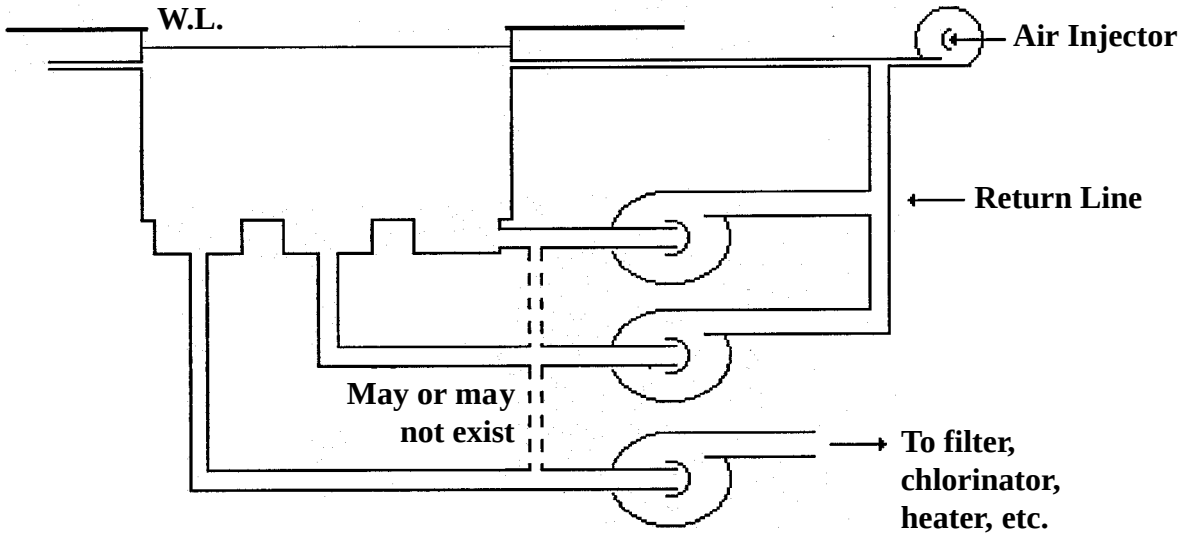

FIGURE 3a. One type of Anti-Vortex Drain Cover. ***Notice the top of the cover is domed.***

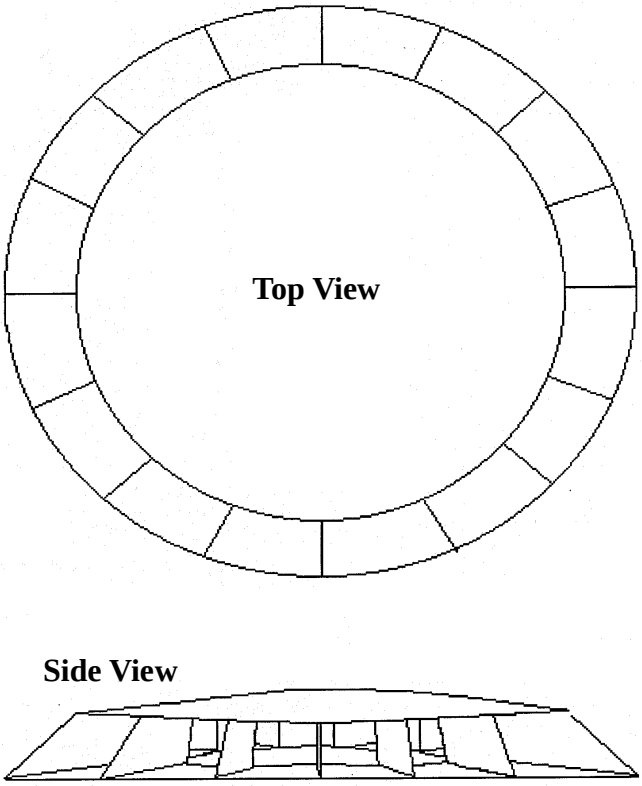

FIGURE 3b. Another type of design for Anti-Vortex Cover. ***Note again the domed top of the cover.***

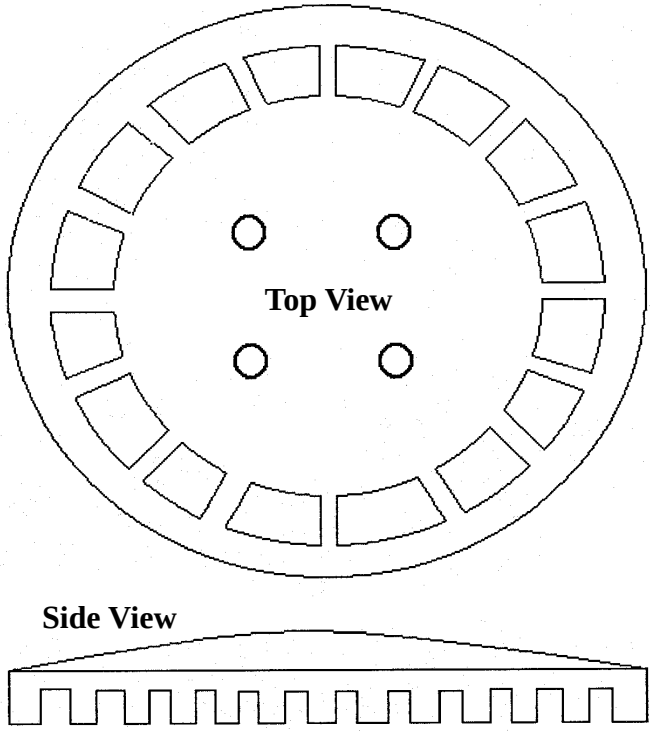

FIGURE 3c. Top and Side View of Suction Drain Cover. ***The top of the cover may or may not be domed.***

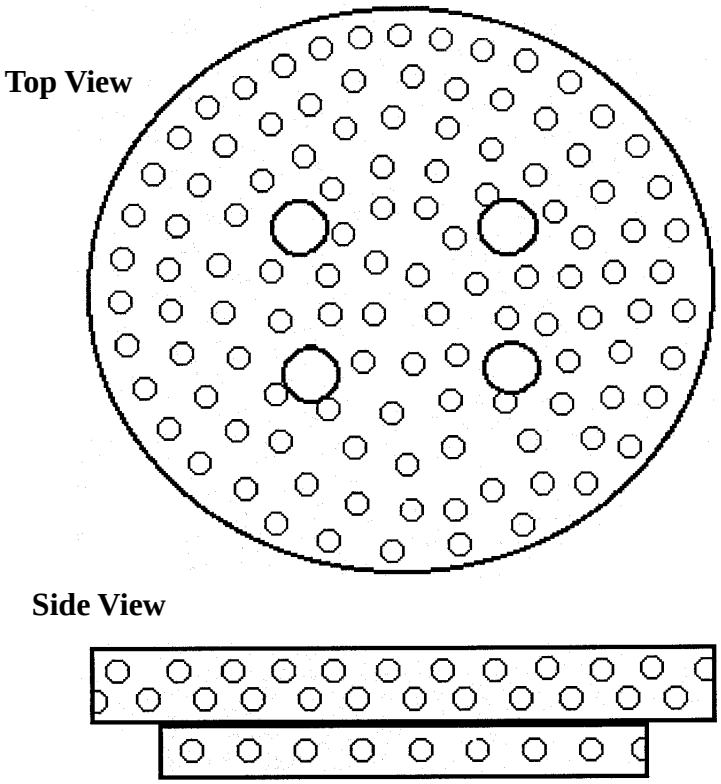

The necessary frequency of thorough inspections will depend on the type of equipment to be inspected and the amount of its use. Inspections should give special attention to moving parts, components that can be expected to wear, and drain covers. Trained personnel should conduct all inspections. Some manufacturers supply checklists for general or detailed inspections with their maintenance instructions. These should be used. A general checklist that may be used as a guide for frequent routine inspections of swimming facilities is included in these guidelines.

Inspections alone do not constitute a comprehensive maintenance program. All hazards or defects identified during inspections should be repaired promptly before opening the facility to the public. All repairs and replacements of equipment parts should be completed in accordance with the manufacturer's instructions.

In addition to this general maintenance inspection, more detailed inspections should be conducted regularly. The procedures and schedules for these detailed inspections will depend on the types of equipment, the level of use, and the local climate, as well as the maintenance instructions provided by equipment manufacturers. A qualified pool specialist should repair any damage or hazards detected during inspections in accordance with the manufacturer's instructions.

The checklist in these guidelines addresses potential entrapment hazards, but is not intended to provide a complete safety evaluation of equipment design and layout. Complete documentation of all maintenance inspections and repairs should be retained, including the manufacturer's maintenance instructions and any checklists used. A record of any accidents and injuries reported to have occurred at the facility should also be collected. This will help identify potential hazards or dangerous features that warrant attention.

A3. MANUFACTURE AND INSTALLATION

Installers, owners, maintenance personnel, and inspectors should ensure that drain covers are manufactured and installed according to the latest specifications set forth by the ASME/ANSI A112.19.8M voluntary standard (Appendix B) for suction fittings. The standard requires that the cover material be tested for structural integrity. The cover also must be tested for hair entrapment potential and is required to display a flow value in gallons per minute (GPM) that indicates the maximum flow rate at which the cover has been approved. The use of a cover under conditions where the maximum allowable flow rate is exceeded can lead to entrapment hazards.

When installed and secured in accordance with the manufacturer's instructions, no fasteners used to affix drain covers should loosen or be removable without the use of tools. In addition, all fasteners should be corrosion resistant and should minimize the likelihood of corrosion to the materials they connect.

During installation, care should be taken to select an appropriately sized pump that, when used with the suction drain fitting, provides the proper flow through that fitting. Failure to do so may result in an increased risk of hair entrapment.

A4. HAZARD IDENTIFICATION, RESOLUTION and RETROFITTING

If a potential entrapment hazard is identified, a qualified pool maintenance professional should be contacted immediately. The correction may be as simple as requiring the installation of approved fasteners (corrosion resistant screws) to the drain cover. More complicated corrections may be necessary, including redesigning the suction drain system to eliminate a single drain, single pump configuration, or incorporating a secondary safety device that either prevents the isolation of a single drain or detects an obstruction and disables the suction pumps.

The principle behind installing a multiple drain system is to prevent a single drain opening from becoming the sole inlet to the suction side of the pump. The installation of at least one additional drain effectively divides the suction between the two drains, provided the piping is the same diameter and the tee is placed midway between the drains (Figure 4a).

Additionally, a channel type drain could be installed in such a way as to prevent the “trapping off” or blockage of the main drain (Figure 4b). The channel, possibly retrofitted onto either or both sides of a 12” x 12” grate, would provide a larger surface area to maintain the desired flow without creating an entrapment hazard since it would be difficult to completely seal or trap off.

One system, currently in use in Florida, is a gravity feed system. A separate tank collects water by means of gravity and the suction pumps are then plumbed to the tank (Figure 5a). This method of circulating, filtering, and/or heating and jetting the pool water removes the direct suction from the pool main drains and skimmers and applies it to the tank, which is generally not occupied.

Similarly, the use of a vent stack or stacks may remove suction from the main drain or skimmer in case a blockage should occur. The stack would be connected to the main suction line between the drain and the pump and would be open to the atmosphere (Figure 5b). The laws of physics require the vent stack to fill with water to a level equal to that of the pool. Should the drain become clogged or obstructed, the pump begins to draw on the water from the vent stack until air is introduced to the system and the suction is broken.

Given the resources required to reconstruct the drain system, a secondary system that works with existing configurations may be desirable until the time and funds are available to make permanent renovations. Such systems may consist of an anti-vortex cover, a larger grate (exceeding 12”x12”) and/or some type of channeling, too large to be sealed by a human body, a sensing device that detects an increased suction associated with blockage, or any combination of these.

FIGURE 4a. Dual Drain System

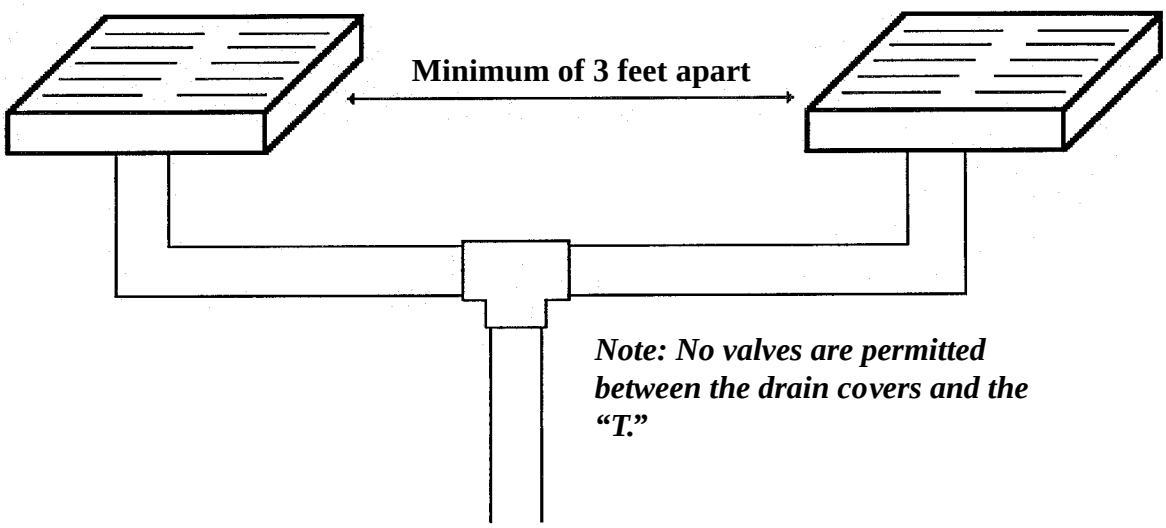

FIGURE 4b. Channel System

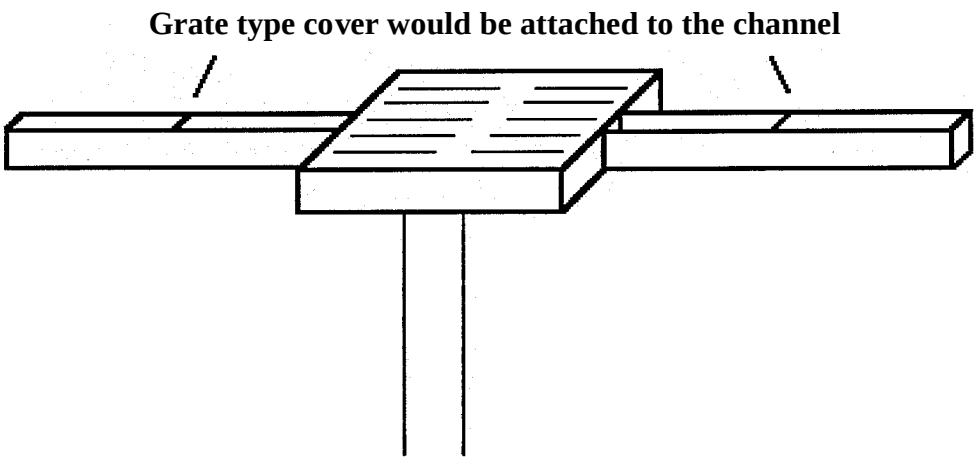

FIGURE 5a. Use of Gravity Feed System to Remove Direct Suction from the Main Drain.

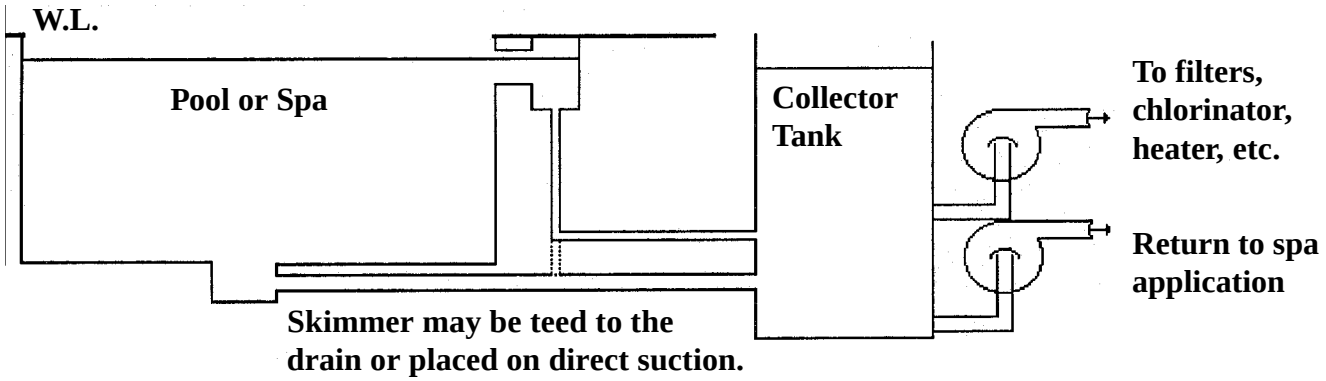

FIGURE 5b. Vent System to Relieve Suction at Main Drain.

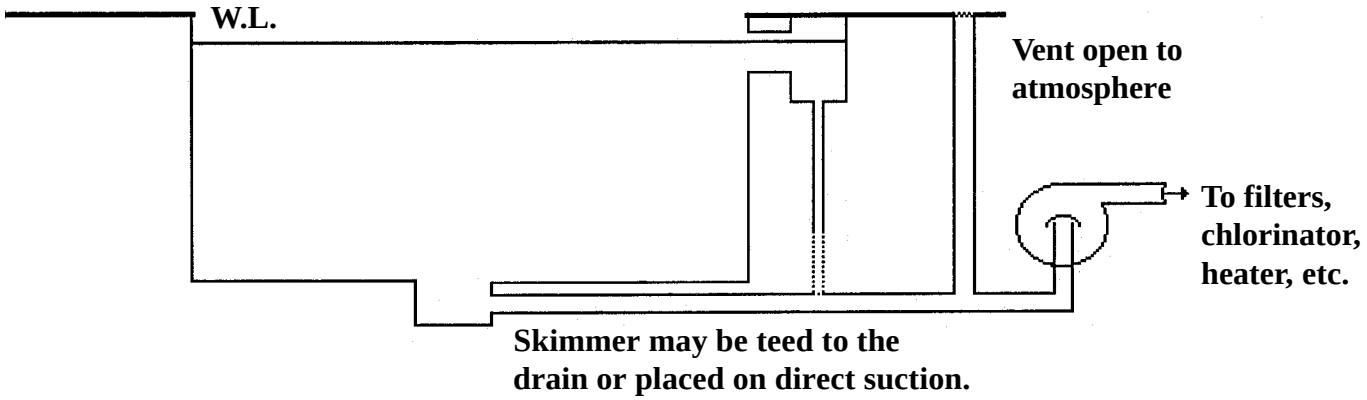

There are available systems that can sense a small increase in suction at the inlet to the pump and shut the power to the pump (Figure 6). The increase in the suction could be caused by a blockage in the skimmer line, at the drain, in the suction line itself, or any combination of these. By sensing an increase in vacuum, the devices trip electrical relays to the pump, which then removes the suction on the line.

FIGURE 6. Diagram of an Intervention Device that Monitors Pump Vacuum.

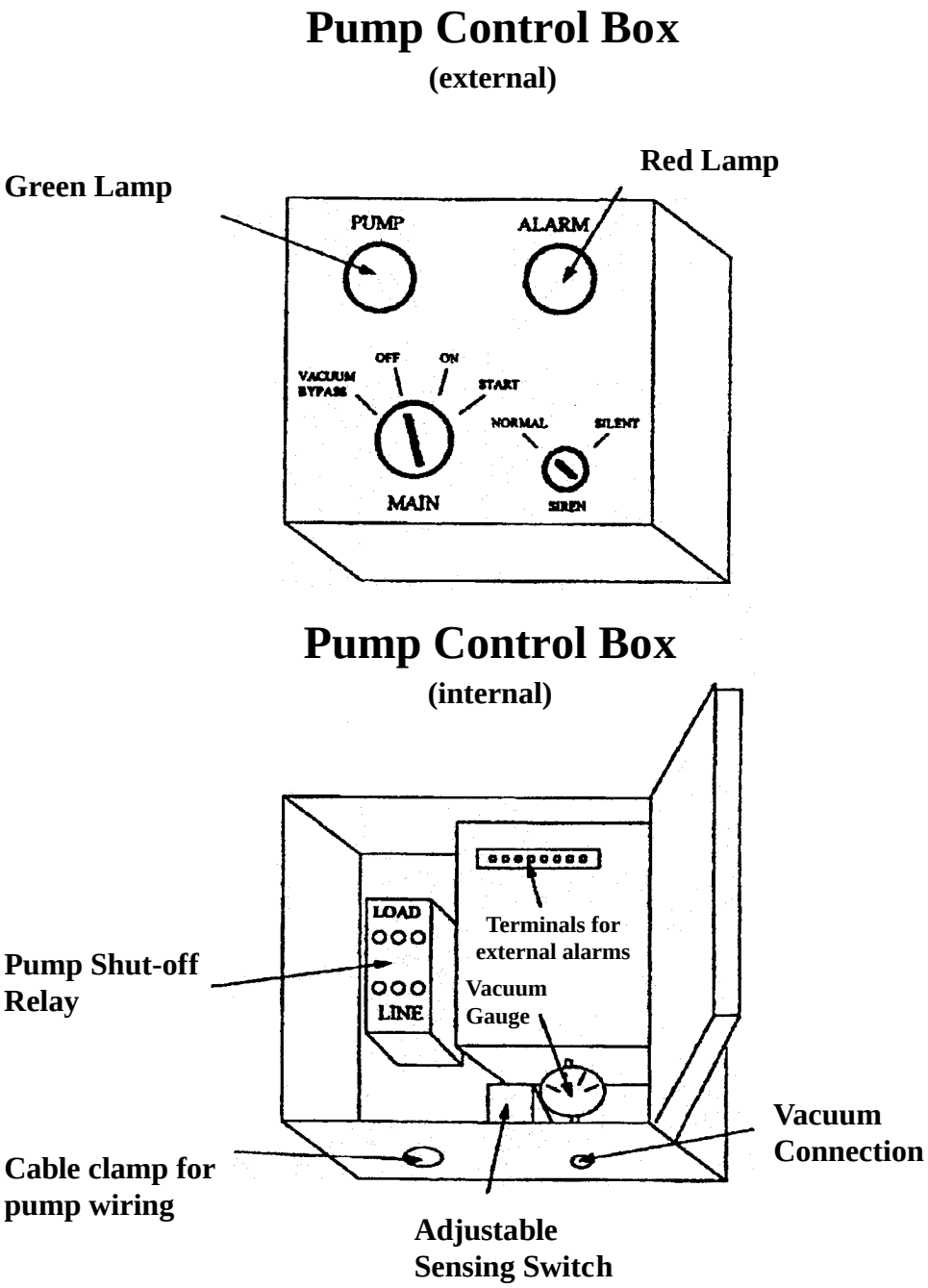

Appendix B

Applicable Standards

Standard:

Suction Fittings for Use in Swimming Pools, Wading Pools, Spas, Hot Tubs and Whirlpool Bathtub Appliances, ASME/ANSI A112.19.8M.

Sponsored and Published by:

The American Society of Mechanical Engineers
United Engineering Center
345 East 47th Street
New York NY 10017

Standard:

The following are American National Standards for Pools and Spas;
ANSI/NSPI-1-1991 Standard for Public Swimming Pools
ANSI/NSPI-2-1992 Standard for Public Spas
ANSI/NSPI-3-1992 Standard for Permanently Installed Residential Spas
ANSI/NSPI-4-1992 Standard for Aboveground/onground Residential Swimming Pools
ANSI/NSPI-5-1995 Standard for Residential Swimming Pools
ANSI/NSPI-6-1992 Standard for Residential Portable Spas

Additionally,

NSPI-7 Standard for Workmanship (June 1996)

Sponsor:
National Spa and Pool Institute
2111 Eisenhower Avenue
Alexandria VA 22314
(703) 838-0083

Standard:

Standard for Electric Spas, Equipment Assemblies, and Associated Equipment, UL 1563.

Sponsor:

Underwriters Laboratories Inc.
1655 Scott Boulevard
Santa Clara CA 95050
(408) 985-2400

Appendix C

GLOSSARY

ANSI

American National Standards Institute.

ASME

American Society of Mechanical Engineers.

Anti-Vortex Cover

A drain fitting designed to prevent the circular or swirling motion of water that tends to form a vacuum or suction at the center and draws the body or hair into the drain pipe.

Backflow

The backing up of water through a pipe in the direction opposite to normal flow.

Ball Valve

A simple non-return valve consisting of a ball resting on a cylindrical seat within a liquid passageway.

Blower (Air)

An electrical device that produces a continuous rush of air to create the optimal bubbling effect in a spa, hot tub or whirl-pool. It is usually plumbed in with the hydrotherapy jets or to a separate bubbler ring.

Centrifugal Pump

A pump consisting of an impeller fixed on a rotating shaft and enclosed in a casing or volute and having an inlet and a discharge connection. The rotating impeller creates pressure in the water by the velocity derived from the centrifugal force.

Check Valve

A mechanical device in a pipe that permits the flow of water or air in one direction only.

Diverter Valve

A plumbing fitting used to change the direction or redirect the flow of water. Some diverter valves are used on pool/spa combinations to allow the use of the spa and then switch the flow back to the pool. This valve may also be referred to as an Ortega valve, a brand name.

Drain

This term usually refers to a plumbing fitting installed on the suction side of the deepest part of the pool, spa or hot tub. Main drains do not drain the pool, spa or hot tub, as a sink drain, but rather connect to the pump to allow for circulation and filtration.

Effluent

The water that flows out of a filter, pump, or other device.

Filter

A device that removes undissolved or suspended particles from water by recirculating the water through a porous substance (a filter medium or element). The three types of filters used in pools and spas are sand, cartridge and D.E. (diatomaceous earth).

Flow Rate

The quantity of water flowing past a designated point within a specified time, such as the number of gallons flowing past a point in one minute - abbreviated as GPM.

GPD

An abbreviation for gallons per day.

GPH

An abbreviation for gallons per hour.

GPM

An abbreviation for gallons per minute.

Gunite

A mixture of cement and sand sprayed onto contoured and supported surfaces to build a pool. Gunite is mixed and pumped to the site dry, and water is added at the point of application. Plaster is usually applied over the gunite.

Gutter

An overflow trough at the edge of the pool through which floating debris, oil, and other “lighter-than-water” things flow. Pools with gutters usually do not have skimmers.

Hot Tub

A spa constructed of wood with sides and bottom formed separately and joined together by hoops, bands or rods.

Hydrojet

A fitting in the pool or spa on the water return line from the equipment that blends or mixes air and water, creating a high-velocity, turbulent stream of air-enriched water.

IAPMO

International Association of Plumbing & Mechanical Officials.

Influent

The water entering the pump, the filter or other equipment of space. Water entering the pump is called the influent, while water exiting the pump is called the effluent.

Inlet

A fitting in the pool or spa on the water return line from the equipment where water returns to the pool. Usually the last thing on the return line.

Jacuzzi

A brand name of a spa or whirlpool. The term has been used so frequently to describe a generic spa, that Jacuzzi has come to mean spa.

Main Drain

A term usually referring to a plumbing fitting installed on the suction side of the pump in pools, spas and hot tubs. Sometimes referred to as the drain, it is located in the deepest part of the pool, spa or hot tub. It does not drain the pool, spa or hot tub, as a sink drain, but rather connects to the pump to allow for circulation and filtration.

Manifold

A branch pipe arrangement that connects several input pipes into one chamber or pump or one chamber onto several output pipes.

Multiport Valve

Also referred to as a rotary-type backwash valve, this valve can replace as many as six regular gate valves. Water from the pump can be diverted for various pool related functions such as, draining, backwashing, bypassing the filter for maximum circulation, normal filtration, filtering before draining, or the valve may be closed by simply turning the handle. (NOTE: The pump must be off before setting the valve position.)

NSPF

National Swimming Pool Foundation.

NSPI

National Spa and Pool Institute.

psi

An abbreviation for pounds per square inch.

Pump

A mechanical device, usually powered by an electric motor, which causes hydraulic flow and pressure for the purpose of filtration, heating and circulation of pool and spa water. Typically a centrifugal pump is used for pools, spas and hot tubs.

Pump Capacity

The volume of liquid a pump is capable of moving during a specific period of time. This is usually specified in GPM.

Pump Curve

Also called the pump performance curve. A graph that represents a pump's water flow capacity at any given resistance.

Rate of Flow

The quantity of water flowing past a designated point within a specified time, such as the number of gallons flowing past a point in one minute. This is usually abbreviated as GPM.

Shotcrete

A mixture of cement and sand sprayed onto contoured and supported surfaces to build a pool or spa. Shotcrete is premixed and pumped wet to the construction site. Plaster is usually applied over the shotcrete.

Skimmer

A device installed through the wall of a pool or spa that is connected to the suction line of the pump that draws water and floating debris in the water flow from the surface without causing much flow restriction.

Skimmer Basket

A removable, slotted basket or strainer placed in the skimmer on the suction side of the pump, which is designed to trap floating debris in the water flow from the surface without causing much flow restriction.

Skimmer Weir

Part of a skimmer that adjusts automatically to small changes in water level to assure a continuous flow of water to the skimmer. The small floating "door" on the side of the skimmer that faces the water over which water flows on its way to the skimmer. The weir also prevents debris from floating back into the pool when the pump shuts off.

Suction Outlet

The aperture or fitting through which the water under negative pressure is drawn from the pool or spa.

Sump

The lowest point in a circulation system, usually consisting of a reservoir, where water is drained.

Tee

A plumbing fitting in the shape of a "T" used to connect pipes.

Turnover

Also called turnover rate. The period of time (usually in hours) required to circulate a volume of water equal to the volume of water contained in the pool or spa. Pool capacity in gallons, divided by pump flow rate in gallons per minute (gpm), divided by 60 minutes in one hour, will give the number of hours for one turnover.

Vacuum

This term can be used to define any number of devices that use suction (negative pressure) to collect dirt from the bottom and sides of a pool or spa. Most common is a vacuum head with wheels that attaches to a telepole and is connected to the suction line usually via the opening in the skimmer. It must be moved about by a person, and debris is collected in the filter.

Weir

Also called skimmer weir - Part of a skimmer that adjust automatically to small changes in water level to assure a continuous flow of water to the skimmer. The small floating "door" on the side of the skimmer that faces the water over which water flows on its way to the skimmer. The weir also prevents debris from floating back into the pool after the pump shuts off.