SCHEDULE III

(Sections 2 and 48 to 50)

TEST FOR DETERMINING THE FLASHBACK AND THE LENGTH OF THE FLAME PROJECTION OF PRODUCTS PACKAGED IN AEROSOL CONTAINERS

Application

1. This test is for use in determining the flashback and the length of the flame projection of any product packaged in an aerosol container.

Apparatus

2. The following apparatus shall be used in carrying out this test:

(a) a flammability tester, illustrated in the figure, that

(i) is designed so that the aerosol container can be secured in place by means of a device, such as a three-pronged clamp affixed to a ring stand, in such a manner that the discharge from the container is in the horizontal plane,

(ii) may include a device by which the valve of any aerosol container can be activated by remote control such as a side-pull, caliper-type bicycle hand brake,

(iii) has a vertically mounted burner

(A) that has an inside diameter of 1.2 mm,

(B) that has been made from a Luer-Lock 16 gauge needle affixed to a metal tube or from other suitable material or devices, and

(C) that is placed at a distance of 15 cm from the discharge orifice of the aerosol container, such distance to be measured horizontally between the vertical planes of the discharge orifice and the burner orifice, and

(iv) has two support frameworks

(A) each having an internal open space 35 cm wide by 45 cm high, constructed from metal or other non-flammable material and mounted in a vertical plane perpendicular to the direction of discharge from the aerosol container, one being at a distance of 15 cm from the burner and the other at a distance of 45 cm from the burner and both being on the opposite side of the burner from the container, and

(B) that are adjustable in the vertical plane;

(b) an n-butane gas cylinder (C.P. grade) fitted with a regulator capable of delivering pressure to the burner appropriate to maintaining the flame heights specified in

ANNEXE III

(articles 2 et 48 à 50)

ESSAI POUR DÉTERMINER LE RETOUR DE FLAMME AINSI QUE LA LONGUEUR DE LA PROJECTION DE LA FLAMME DES PRODUITS EMBALLÉS DANS DES CONTENANTS AÉROSOLS

Objet

1. Le présent essai a pour objet de déterminer le retour de flamme et la longueur de la projection de la flamme d'un produit emballé dans un contenant aérosol.

Matériel

2. Le matériel suivant est nécessaire à l'essai :

a) un dispositif vérificateur d'inflammabilité, tel qu'il est illustré à la figure, qui présente les caractéristiques suivantes :

(i) il est conçu de façon à pouvoir tenir en place le contenant aérosol au moyen d'un dispositif de fixation tel une pince à trois doigts fixée sur un support universel, de sorte que le jet en soit expulsé horizontalement,

(ii) il peut comprendre un dispositif permettant d'actionner à distance la soupage du contenant par un moyen quelconque, tel un frein manuel de bicyclette semblable à une pince,

(iii) il a un brûleur orienté verticalement qui à la fois:

(A) a un diamètre intérieur de 1,2 mm,

(B) est muni d'une aiguille du type Luer-Lock de calibre 16 fixée à un tube de métal, ou d'un autre dispositif approprié,

(C) est placé à une distance de 15 cm de l'orifice du contenant aérosol, mesurée dans le plan horizontal à partir de l'axe vertical de l'orifice du contenant jusqu'à celui de l'orifice du brûleur,

(iv) il a deux cadres de soutien qui:

(A) d'une part, ont chacun un espace intérieur vide de 35 cm de largeur et de 45 cm de hauteur, sont fabriqués en métal ou d'un autre matériau ininflammable et sont montés dans un plan vertical perpendiculaire à la direction du jet expulsé du contenant aérosol, un des cadres étant à 15 cm du brûleur et l'autre à 45 cm, et tous deux étant du côté opposé au brûleur par rapport au contenant,

(B) d'autre part, sont ajustables dans le plan vertical;

b) une bonbonne de gaz n-butane (qualité pure) munie

subsection 4(5); and

(c) loosely woven cotton fabric commonly referred to as cheesecloth that has, in the bleached state, a mass per unit area of not less than 35 g/m^2 and not more than 65 g/m^2.

Test Specimen

3. (1) Where there are instructions by the manufacturer respecting the shaking of the aerosol container, a test comprised of three discharges from each of three aerosol containers of the same product and of the same size shall be conducted.

(2) Where there are no instructions by the manufacturer respecting the shaking of the aerosol container, a test comprised of three discharges from the container without shaking and subsequently, three discharges from the container after shaking, in accordance with subsection 4(9), from each of three aerosol containers of the same product and of the same size shall be conducted.

Procedure

4. (1) A test

(a) shall be carried out at a temperature of (22±2)°C in the absence of air currents with an allowance made for a clearance of 50 cm beyond the support framework set at a distance of 45 cm from the burner; and

(b) may be conducted in a fume hood with the exhaust fan turned off and the protecting door lowered.

(2) All the fumes shall be exhausted and the residue cleaned up after each discharge.

(3) Each aerosol container shall be conditioned to a temperature of (22±2)°C and a discharge shall be released for five seconds from each aerosol container prior to testing.

(4) Install the first aerosol container in the device and ensure that the burner orifice is 15 cm from the discharge orifice of the container in the horizontal plane and 5 cm below it in the vertical plane and that the discharge orifice points in the direction of the burner.

(5) Adjust the burner to give a flame height of 5 cm and release a trial discharge from the aerosol container and, if no flame projection occurs, lower the burner orifice by 5 cm and adjust the burner to give a flame height of 12 cm.

d'un dispositif régulateur de la pression permettant de maintenir la flamme du brûleur à l'une ou l'autre des hauteurs prévues au paragraphe 4(5);

c) de la gaze de coton, communément appelée étamine, qui a, lorsqu'elle est blanchie, une masse par unité de surface d'au moins 35 g/m^2 et d'au plus 65 g/m^2.

Échantillonnage

3. (1) Si le mode d'emploi du fabricant précisé qu'il faut agiter le contenant aérosol, trois contenants aérosols du même produit et du même format doivent être mis à l'essai, à raison de trois jets par contenant.

(2) Si le mode d'emploi du fabricant ne précise pas qu'il faut agiter le contenant aérosol, chacun des trois contenants aérosols du même produit et du même format doivent être mis à l'essai d'abord en expulsant trois jets sans avoir agité le contenant, puis en expulsant trois jets après avoir agité le contenant conformément au paragraphe 4(9).

Méthode

4. (1) L'essai :

a) d'une part, doit s'effectuer à une température de (22±2) °C, sans aucun courant d'air, un espace de 50 cm au-delà du cadre installé à 45 cm du brûleur devant être prévu;

b) d'autre part, peut s'effectuer sous une hotte dont le ventilateur est éteint et la fenêtre de protection baissée.

(2) Après chaque jet expulsé, les vapeurs doivent être évacuées et les résidus nettoyés.

(3) Les contenants aérosols doivent être maintenus à une température de (22±2) °C et un jet d'une durée de cinq secondes doit être expulsé de chaque contenant avant l'essai.

(4) Placer le premier contenant aérosol dans le dispositif de fixation et s'assurer que l'orifice du brûleur est à une distance horizontale de 15 cm de l'orifice du contenant et à une distance de 5 cm au-dessous de l'axe vertical de l'orifice du contenant et que l'orifice est orienté vers le brûleur.

(5) Régler la flamme du brûleur à une hauteur de 5 cm, expulser un jet du contenant aérosol à titre d'essai préliminaire et, s'il n'y a pas de projection de la flamme, baisser l'orifice du brûleur de 5 cm et régler la hauteur de la flamme à 12 cm.

(6) Attach the cheesecloth to the flammability tester with bulldog clips or in any other manner so as to cover the entire internal space of the support framework set at a distance of 15 cm from the burner.

(7) Verify that the cheesecloth is at a proper horizontal distance from the vertical plane of the burner orifice (on the opposite side of the burner from the aerosol container).

(8) Adjust the height of the support framework so that the cheesecloth will intercept the line of flame projection.

(9) Prepare the aerosol container in accordance with the manufacturer's instructions and

(a) if shaking is applicable,

(i) shake vigorously for five seconds, or for the period of time specified in the manufacturer's instructions,

(ii) install the container in the device, and

(iii) 15 seconds after the cessation of shaking, release the first discharge in accordance with subsection (10); or

(b) if shaking is not applicable, install the container in the device and release the discharge in accordance with subsection (10).

(10) Release a discharge

(a) until the valve of the aerosol container has been open for five seconds; or

(b) where any part of the cheesecloth ignites before the end of five seconds, until the time of such ignition.

(11) Before each subsequent discharge of each aerosol container tested, allow the container to stand for at least 60 seconds and

(a) if shaking is applicable, repeat the procedure referred to in paragraph (9)(a); or

(b) if shaking is not applicable, release the discharge in accordance with subsection (10).

(12) Where the cheesecloth attached to the support framework set at a distance of 15 cm from the burner ignites, the remaining discharges referred to in section 3 shall be carried out in accordance with subsections (1) to (11), but with a new piece of cheesecloth attached to the support framework set at a distance of 45 cm from the burner.

Determination and Reporting of Flame Pojection and Flashback

(6) Fixer l'étamine au dispositif vérificateur d'inflammabilité, au moyen de pince-notes ou par un autre moyen, afin de couvrir l'espace intérieur vide du cadre de soutien situé à 15 cm du brûleur.

(7) Vérifier si l'étamine est à la bonne distance horizontale de l'axe vertical de l'orifice du brûleur tout en étant du côté opposé au brûleur par rapport au contenant aérosol.

(8) Régler la hauteur du cadre de façon à ce que l'étamine intercepte la ligne de projection de la flamme.

(9) Préparer le contenant aérosol conformément au mode d'emploi du fabricant et :

a) s'il y est conseillé d'agiter :

(i) le faire avec vigueur pendant cinq secondes ou pendant la durée recommandée par le fabricant,

(ii) placer le contenant dans le dispositif de fixation,

(iii) 15 secondes après avoir agité le contenant, expulser le premier jet conformément au paragraphe (10);

b) s'il n'y est pas conseillé d'agiter, placer le contenant dans le dispositif de fixation et expulser le jet conformément au paragraphe (10).

(10) Expulser chacun des jets en actionnant la soupape du contenant aérosol :

a) soit pendant cinq secondes;

b) soit jusqu'à ce qu'une partie de létamine s'enflamme, si cela se produit en moins de cinq secondes.

(11) Pour chaque jet subséquent de chacun des contenants aérosols mis à l'essai, laisser reposer le contenant pendant au moins 60 secondes et :

a) si le mode d'emploi conseille d'agiter, répéter le procédé prévu à l'alinéa (9)a);

b) si le mode d'emploi ne conseille pas d'agiter, expulser le jet conformément au paragraphe (10).

(12) Si l'étamine tendue sur le cadre placé à 15 cm du brûleur s'enflamme, les autres jets visés à l'article 3 doivent être expulsés conformément aux paragraphes (1) à (11), avec une nouvelle étamine tendue sur le cadre placé à 45 cm du brûleur.

Détermination de la projection de la flamme et du retour de flamme et compte rendu

5. (1) Where, at any time during the test, , the cheesecloth mounted at a distance of 45 cm from the burner in accordance with subsection 4(12) is ignited, the length of the flame projection is 45 cm or more.

(2) Where, at any time during the test, the cheesecloth mounted at a distance of 15 cm from the burner in accordance with subsection 4(6) is ignited but the cheesecloth mounted at a distance of 45 cm from the burner in accordance with subsection 4(12) is not ignited, the lengthy of the flame projection is 15 cm or more but less than 45 cm.

(3) Where, at any time during the test, the cheesecloth mounted at a distance of 15 cm from the burner in accordance with subsection 4(6) is not ignited, but there is a flame projection, the length of the flame projection is less than 15 cm.

6. The following results shall be reported:
(a) the length of the flame projection;
(b) a lack of flame projection resulting from any of the test discharges; and
(c) any flashback.

5. (1) Si l'étamine placée à 45 cm du brûleur conformément au paragraphe 4(12) s'enflamme au cours de l'essai, la projection de la flamme est d'une longueur de 45 cm ou plus.

(2) Si l'étamine placée à 15 cm du brûleur conformément au paragraphe 4(6) s'enflamme au cours de l'essai, alors que celle placée à 45 cm du brûleur conformément au paragraphe 4(12) ne s'enflamme pas, la projection de la flamme est d'une longueur de 15 cm ou plus et de moins de 45 cm.

(3) Si l'étamine placée à 15 cm du brûleur conformément au paragraphe 4(6) ne s'enflamme pas au cours de l'essai mais qu'il y a projection de la flamme, la projection de la flamme est d'une longueur de moins de 15 cm.

6. Les résultats suivants doivent être signalés :
a) la longueur de la projection de la flamme;
b) l'absence de projection de la flamme par suite de l'expulsion du jet;
c) tout retour de flamme. DORS/89-491, art. 15.

FIGURE
FLAMMABILITY TESTER / DISPOSITIF VÉRIFICATEUR D'INFLAMMABILITÉ

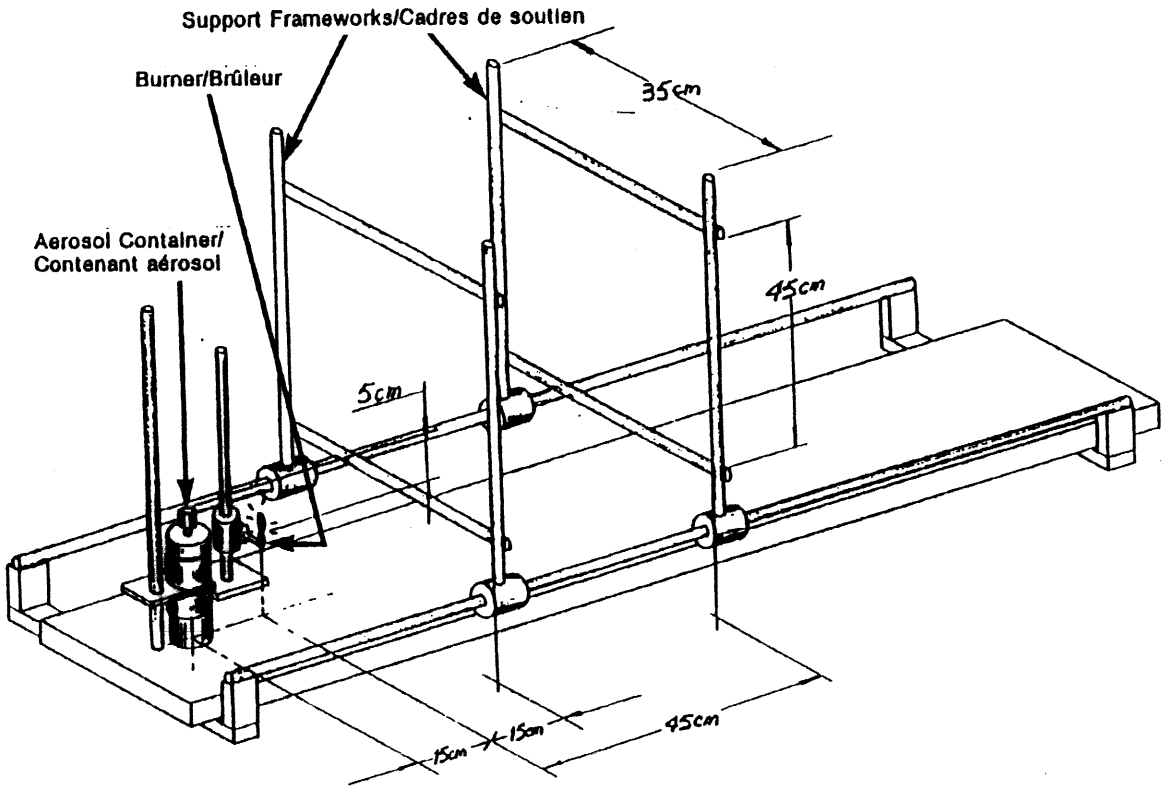

Review

International Journal for Consumer Safety 0929-8347/96/US$ 10.50

International Journal for Consumer Safety – 1996, Vol. 3, No. 3, pp. 153-164
© *Æolus Press*
Buren (The Netherlands) 1996

Accepted 19 March 1996

Aspiration hazard and consumer products: a review.

André G. Craan

Scientific and Laboratory Services Division, Product Safety Bureau, Health Protection Branch, Health Canada, Ottawa

Abstract Aspiration is the entry of liquid or solid materials through the oral or nasal cavity into the trachea and lower respiratory structures. It is initiated at the moment of inspiration, as the causative material lodges at the crossroad of the upper respiratory and digestive tracts.

Two major categories of consumer products present a risk of aspiration. They are, on the one hand, petroleum aliphatic hydrocarbons such as kerosene and gasoline, and on the other, lipid and fat-like materials such as mineral and vegetable oils.

The hazard of aspiration and its pathological consequences are determined by physical chemical characteristics of a consumer product, and by physiological mechanisms of the respiratory and upper digestive tracts. The former are referred to as intrinsic factors and the latter as extrinsic factors pertaining to the subject at risk. Viscosity and surface tension are the most important intrinsic factors to consider in assessing potential aspiration of consumer products. At the same time, evaluating the conditions of operation of reflex mechanisms, as well as the actual level of consciousness, can help identify individuals at higher than average risk.

The present evaluation of the intrinsic and extrinsic factors which determine the occurrence of aspiration provides a rationale for considering this phenomenon as part of a hazard-based criteria scheme for regulating consumer products. This is most feasible through labelling, and a two-tier scheme is proposed to address the regulatory concerns for aspiration hazards. Both tiers are primarily based on *viscosity* and *surface tension*.

In the absence of professional judgement, the first tier could be used to label and warn the consumer against the hazard of aspiration of liquid substances which have a *viscosity* of less than *14 mm²/sec* at 38°C (14 centiStokes = 73.4 Saybolt Universal Seconds) and/or a *surface tension* of less than *29 dynes/cm* (mN/m).

When appropriate expertise is available, the *second tier* would be the same as *the first*, except to *exempt from labelling* products which do not present an aspiration hazard, based on the following guidelines:

(1) a boiling point *lower than 50°C, hydrosolubility* and the *absence of nauseous or emetic properties do not favor* completion of the *aspiration* process;

Correspondence to:
André G. Craan
Product Safety Laboratory
1800 Walkley Road, Room 236
Postal Locator: 6402A5
Ottawa, ON, Canada K1A 0L2

Acknowledgements:
Thanks are due to R. Walker, E. Nielsen, A.W. Myres and J. Harrison for reviewing the manuscript.

(2) substances which contribute to an *increase in the viscosity and surface tension* of a consumer product mixture tend to *decrease the potential for aspiration*;
(3) the aspiration risk is lower for adults who are not challenged with pathological conditions in reflex mechanisms of the respiratory and upper digestive tracts as well as with neurological abnormalities capable of causing loss of consciousness.

The first tier would be improved if it also offered, through expert judgement, a list of substances not conforming to the adopted viscosity/surface tension cut-off guideline.

Keywords aspiration pneumonitis, hydrocarbon ingestion, viscosity, surface tension, product safety

Introduction Aspiration is the entry of liquid or solid materials through the oral or nasal cavity into the trachea and lower respiratory structures. It is initiated at the moment of inspiration, in the time required to take one breath, as the causative material lodges at the crossroad of the respiratory and digestive tracts, the so-called laryngopharyngeal region.[1]

Any liquid or solid substance can initiate or cause aspiration. Its propensity towards reaching and/or affecting lower respiratory structures differentiates aspiration from expulsion. An aspiration event that has not been completed but has resulted in expulsion, has no pathological significance. Therefore, although both the initiation and the fully completed event are generally referred to as aspiration, analysis of the phenomenon indicates that even after initiation, the sequence of events can be disturbed, thus aborting the pathological consequences of aspiration.

The present paper is a detailed examination of the physical chemical properties that confer on a substance its potential for aspiration, as well as an analysis of the physiopathological mechanisms involved. This review aims at developing criteria for establishing guidelines to assess and manage the hazard associated with aspiration.

Literature review Life-threatening episodes of aspiration were first observed in clinic and hospital emergency rooms. Animal experimentation provides a better understanding of the phenomenon even though laboratory models may not always mirror human experience. Based on existing data concerning mechanisms and frequency of occurrence, the following classification emerges for materials which present a risk of aspiration:
Category 1 Petroleum aliphatic hydrocarbons: kerosene, gasoline;
Category 2 Lipid and fat-like materials: mineral oil, vegetable oil;
Category 3 Gastric acidic contents;
Category 4 Halogenated and aromatic hydrocarbons.

Only the first two categories are considered relevant to consumer products since substances in these categories are found most often on the market as components of consumer products.

Efforts to understand the roots and mechanisms of aspiration began at the therapeutic level and this explains why its various aspects have been described according to the symptoms observed.[2-5] As a result, the immediate management of aspiration cases has been essentially *symptomatological, conservative and prudent*.

ANIMAL DATA Few laboratory experiments have been performed involving aspiration in animals. Structure-activity relationship studies of the aspiration hazard associated with homologous series of hydrocarbons provide few meaningful conclusions in view of the short time-lapse between dosing and the effects, which are quite often lethal. Furthermore, biotransformation and metabolism at the site of aspiration appear to be practically nonexistent and irrelevant to comparisons between closely related substances.

Table 1 represents an attempt to reveal patterns of the aspiration potential of organic substances by regrouping them in homologous series. It combines data from handbooks and textbooks of Physical Chemistry[6-8] with the results of animal experiments by Gerarde and Ahlstrom.[1,9]

In examining the data, no comparison can be drawn among homologous series, but within each series, the values of viscosity, surface tension and boiling point (b.p.) increase with chain length.

The organic substances shown in Table 1 have viscosities of less than 15 centiStokes and surface tensions of less than 29 dynes/cm. Below these values, the potential for aspiration is high except in rare cases like methanol. Aspirability, expressed in the last column of Table 1 as the propensity to aspiration, is the sum of the percentage mortality ratio plus the real value (not the percentage) of the lung weight ratio. In other words, we have adopted an aspirability scale that gives mortality ratio 100 times as much weight as lung weight ratio. The reason for this disparity is that in the experiments of Gerarde and Ahlstrom,[1,9] mortality was a sufficient indicator of aspiration whereas lung weight ratio simply confirmed the results.

A propensity to aspiration of more than 100 indicates various degrees of pulmonary damage with clear lethal consequences as is the case for n-hexane. For propensities of aspiration of more than 60, the severity of pathological consequences should be considered high (e.g. n-hexene, 100% isopropanol), as opposed to values of less than 25 (e.g. 70% ethanol, 70% isopropanol). Finally, the value of 1 for cyclopentene indicates the absence of any hazard of aspiration (Table 1).

Up to a certain limit, in the neighbourhood of 60°C, hydrocarbons and alcohols having a very low boiling point may not cause aspiration in spite of a viscosity and a surface tension that are suitably low to suggest this hazard. A borderline boiling point range may exist where substances like methanol and hexane, with respective b.p. of 65.0 and 68.7°C, obey that rule, whereas others like hexene and hexyne may not cause aspiration one third of the time, as calculated from the propensity to aspiration column in Table 1.

Pulmonary injury and mortality were equally correlated with viscosity. Modifications of hydrocarbon mixtures, such as dilution in water, precluded the occurrence of aspiration.

When primary alcohols up to C13 were used undiluted in the rat model of Gerarde and Ahlstrom,[1] the most interesting feature discovered was that methyl alcohol, with a viscosity most capable of producing aspiration, was the only one not do so. It evaporated and was expired rapidly out of the mouth without any pathological consequences for the respiratory tract. Both methyl and ethyl alcohols have very close physical chemical properties except for molecular weight, melting point and boiling point as illustrated in Table 1, i.e. a viscosity of less than 32 SUS or 2 centiStokes (at 37.7°C), a surface tension of approximately 23 dynes/cm and a density of 0.79. The difference in melting point is physiologically irrelevant since it is several

COMPOUND	b. p. °C	VISCOSITY[1] cSt (SUS) at 37.8°C	S.T.[2] dyne/cm	ASPIRATION MORTALITY RATIO[3]	LUNG WEIGHT RATIO[3] g_{exp}/g_{contrl}	PROPENSITY TO ASPIRATION[4]
WATER	100	1.0 (16)	72.8	—	—	—
n-ALKANES						
n-HEXANE	68.7	0.5 (7)	18.4	5/5	3.3/1.3	102.5
n-OCTANE	125.7	0.6 (9)	21.8	5/5	2.9/1.3	102.2
n-DODECANE	216.2	1.8 (29)	—	5/5	5.1/1.3	103.9
n-TETRADECANE	253.7	2.0 (33)	—	5/5	5.2/1.3	104.0
n-HEXADECANE	287.5	3.3 (40)	—	1/5	3.4/1.3	22.6
ALKENES (OLEFINS)						
1-PENTENE	30.0	<2 (<32)	—	0 [5]	N/A[6]	NONE
1-HEXENE	63	<2 (<32)	—	3/5	2.3/1.3	61.8
1-OCTENE	121	<2 (<32)	—	5/5	3.1/1.3	102.48
1-DODECENE	213	<2 (<32)	—	4/4	4.9/1.3	103.7
1-TETRADECENE	232	2.0 (32)	—	5/5	4.3/1.3	103.3
1-HEXADECENE	284.4	2.9 (35)	—	0/5	3.9/1.3	3.0
1-OCTADECENE	179	3.9 (38)	—	1/5	3.4/1.3	22.6
2-NONADECENE	—	4.1 (40)	—	0/5	2.7/1.3	2.1
ALKYNES						
1-HEXYNE	71.3	—	—	3/5	2.2/1.3	61.7
1-OCTYNE	125.2	—	—	5/5	2.6/1.3	102.0
1-DECYNE	174	—	—	5/5	3.0/1.3	102.3
1,7-OCTADIYNE	135	—	—	3/5	1.9/1.3	61.5
1,8-NONADIYNE	162	—	—	4/5	1.9/1.3	81.5
CYCLOPARAFFINS						
CYCLOPENTANE	49.3	0.7 (11) 13.5°C	23.9	1/3	1.6/1.3	34.5
CYCLOHEXANE	80.7	1.3 (21) 17 °C	25.5	2/3	2.1/1.3	68.3
CYCLOOCTANE	148.5	2.8 (34) 13.5°C	—	3/3	2.9/1.3	102.2
CYCLOOLEFINS						
CYCLOPENTENE	44.2	—	—	0/3	1.3/1.3	1
CYCLOHEXENE	83.0	0.8 (13) 20 °C	—	1/3	1.9/1.3	34.8
1,3 CYCLOOCTADIENE	—	—	—	2/3	2.1/1.3	68.3
1,5 CYCLOOCTADIENE	150.8	—	—	0/3	2.0/1.3	1.5
CYCLOOCTATETRAENE	140.6	—	—	0/3	1.2/1.3	0.9
PRIMARY ALCOHOLS						
METHANOL	65	0.6 (10)	22.6	1/10	1.6/1.3	11.2
ETHANOL	78	1.8 (29)	22.8	5/10	2.1/1.3	51.6
ETHANOL 70%	—	—	26.5	1/10	1.5/1.3	11.2
n-PROPANOL	97	1.9 (30)	23.8	9/9	2.5/1.3	101.9
ISOPROPANOL	82	2.3 (34)	21.7	6/10	2.3/1.3	61.8
ISOPROPANOL 85%	—	—	—	1/10	1.5/1.3	11.2
ISOPROPANOL 70%	—	—	—	1/10	1.4/1.3	11.2
n-BUTANOL	114	2.5 (34)	24.6	9/10	2.9/1.3	92.2

n-BUTANOL 85%	—	—	23.5	9/10	2.7/1.3	92.1
ISOBUTANOL	108	5.8 (45)	23.0	10/10	3.0/1.3	102.3
ISOBUTANOL 85%	—	—	—	7/10	2.4/1.3	71.8
AMYL ALCOHOL	138	3.0 (36)	25.6	10/10	3.3/1.3	102.5
HEXANOL	153	4.0 (39)	27.3	10/10	4.0/1.3	103.1
HEPTANOL	175	4.6 (41)	27.1	10/10	3.3/1.3	102.5
OCTANOL	195	6.0 (46)	27.5	10/10	3.0/1.3	102.3
NONANOL	214	7.5 (50)	26.4	10/10	3.3/1.3	102.3
DECANOL	231	9.0 (55)	27.3	9/10	2.7/1.3	92.1
HENDECYL ALCOHOL	131	10.5 (61)	28.3	10/10	3.1/1.3	102.4
DODECYL ALCOHOL	255-259	11.5 (68)	28.3	9/10	3.6/1.3	92.8
TRIDECYL ALCOHOL	152	14.5 (75)	28.6	9/10	4.7/1.3	93.6

TABLE 1. Physical properties and aspiration hazard associated with hydrocarbons and primary alcohols studied in rats.
[1]Viscosity in centistokes, Saybolt Universal Seconds in parentheses. [2]Surface tension at 20°C. [3]Data from Gerarde[9] and Gerarde and Ahlstrom[1]. [4]Propensity to aspiration is the sum of the percentage mortality ratio plus the value (not the percentage) of the lung weight ratio. [5]Substance evaporated from the animal's mouth. [6]N/A: not applicable.

degrees below the freezing point of water. Boiling point appears to be a determining factor, if not the determining factor, in the difference between methanol and ethanol as a cause of aspiration. Boiling point is an indication of the volatility of a substance or its tendency to evaporate. Conversely, volatility is directly proportional to boiling point.

A comparison between the physical chemical properties of ethanol and those of its superior primary alcohol homologues up to C13 reveals a much faster increase, with chain length, of boiling point than of viscosity and surface tension. Yet, all the primary alcohols from C2 to C13 caused aspiration in rats to the same degree except for differences in survival time after dosing. In the light of these comparative data, it appears that, similar to viscosity, alcohols having boiling points below a critical temperature are not likely to be aspirated. Based on the data of Gerarde and Ahlstrom,[1] such a value must be between 65.0 and 78.5°C.

Other substances and mixtures, not shown in Table 1, that produce aspiration in laboratory animals are mineral seal oil,[10] polyacrylamide gel,[11,12] gastric juice[13,14] and bile.[15] Ketones damage the lung only by instillation into rat trachea.[16]

HUMAN EXPERIENCE Human evidence suggests that aspiration hazard is related to the viscosity and perhaps the surface tension and the boiling point of any liquid.[17]

Organic compounds associated with chemical pneumonia Hydrocarbon mixtures associated with chemical pneumonia include lamp oil,[18] gasoline[19-21] and kerosene.[2,22,23] Aspiration is of particular concern in countries where young children can gain access to coloured and perfumed lamp oils, as seen in Germany, Switzerland and Scandinavia.[18,24] A rare case of p-dichlorobenzene poisoning[25] echoed the aspiration hazards of various detergent types as they are vomited after ingestion by children.[26-28] Aspiration of crude oil mixtures of cyclic aliphatic and aromatic hydrocarbons was suggested by Rodriguez *et al.*[29] as being responsible for the death of 3 workers in the process of cleaning and repairing a petrol tanker. This post-diagnostic or post-mortem conclusion is only based on the suggestion that the lung tissue could not be invaded by absorption from blood as demonstrated in experiments with dogs,[30] but through vomitus aspiration.[31] Given more evident signs of asphyxiation,[29] this argument is not sufficient to conclude that aspi-

ration was the leading cause of the pathologies described.

Finally, contrary to the results of animal experimentation, no report has been identified on aspiration of primary alcohols or ketones in humans.

Materials associated with lipoid pneumonia Lipoid pneumonia is an uncommon condition resulting from the the invasion of the lung tissue by lipid or fat-like material. The latter may be endogenous or exogenous, thus giving rise to two major independent variants of the disease: endogenous lipoid pneumonia and exogenous lipoid pneumonia. The present paper is not concerned with endogenous lipoid pneumonia, which occurs in patients with lung cancer and develops when lipids that normally reside in the lung tissue escape from destroyed alveolar cells or from lung tissue damaged by a suppurative process.[32,33]

Exogenous lipoid pneumonia[34] results from aspirating or inhaling material such as mineral and vegetable oils, found in laxatives, skin conditioners and various aerosolized industrial materials.[35-48] These foreign substances, the aspiration of which is associated with the appearance of oil droplets in lung tissues, may or may not elicit immune reactions of the organism, particularly of the lung. Damage to the lungs can be nil, little or can fulminate to necrosis and hemorrhage.[49]

No report has been identified on the aspiration of animal oil by humans.

Mercury and biological materials Other materials that cause aspiration in humans are metallic mercury[50-53] and biological materials such as gastric contents[5,54-61] and meconium.[62,63] While the aspiration of biological fluids, particularly of gastric acid, may vary with the product ingested, predisposing factors and physiological mechanisms involved would overrule any regulations.

Determinants of aspiration The pathological outcome of aspiration depends on the propensity of a substance to affect lower respiratory structures. Factors that influence this tendency of a consumer product can be classified in two groups: intrinsic factors and extrinsic factors.

Intrinsic factors are the physical chemical characteristics of a consumer product, such as physical form, viscosity, surface tension, boiling point, vapour pressure, volatility and water solubility. In addition to volume, which is an indication of the degree of exposure, they appear to determine the ability of a liquid to produce aspiration.

Extrinsic factors are:

1 physical chemical characteristics of endogenous and exogenous substances present at the site of aspiration, the laryngopharyngeal region,
2 mechanisms pertaining to respiratory and upper digestive tract physiology which either facilitate or inhibit the aspiration process.

INTRINSIC FACTORS AS CRITERIA NOT REQUIRING PROFESSIONAL JUDGEMENT FOR USE IN REGULATIONS

Physical form No set patterns of aspiration have been described for solid materials. The composition of solids is relevant to whether aspiration occurs or not, according to their ability to release or provoke, *in situ*, the release of liquid substances which fulfill the conditions for causing the pathological

consequences of aspiration. This is to say that the physical chemical properties of the released liquid represent the direct determinants of aspiration. In other words, the regulatory approach to solids that release liquids at body temperature must be dictated by the properties of the liquids as discharged *in situ*. Regulations already exist under the Hazardous Products Act of Canada as well as the U.S. Federal Hazardous Substances Act, to prevent choking in children, based on small product parts and on toy size.[64,65] For these reasons, the present report recommends no new legislation to address aspiration hazards of solids, and the discussion focuses on the determining factors of aspiration of *liquid* materials.

Viscosity Of the intrinsic factors, only viscosity has been recognized in the past as having a range of units which provides, for regulatory purposes, a cut-off value applicable without professional judgement. Poison Control Centers data reveal that hydrocarbons having a viscosity of less than 3 mm^2/sec (35 Saybolt Universal Seconds) pose a high aspiration hazard, whereas the potential for aspiration decreases with a viscosity of 11 mm^2/sec or greater.[66] Therefore, it is legitimate to consider that substances having a viscosity of less than 14 mm^2/sec at 38°C (14 centiStokes = 73.4 Saybolt Universal Seconds) are likely to constitute hazards of aspiration, although below this value, no clear mathematical relation can be established between the aspirability of consumer products and their viscosity. The 1993 Consolidation of the Hazardous Products Act of Canada addresses this concern in Sections 37, 38 and 39 of the Consumer Chemicals and Containers Regulations by regulating petroleum distillates which have a viscosity of less than 13 mm^2/sec at 38°C.[64] It is recommended, however, to provide, through expert judgement, a list of substances not obeying this viscosity cut-off limit.

Surface tension Based on current knowledge, surface tension could also be used for labelling in the absence of professional judgement. Most organic and inorganic liquids have a room temperature surface tension ranging from 15 to 50 dynes/cm. As shown in Table 1, substances having surface tensions in the range of 18.4 to 28.6 dynes/cm at 20°C were found to cause aspiration in rats but, similar to viscosity, no clear relationship could be established between aspiration hazard and that parameter. Although this range of surface tension is more likely to cause a substance to be aspirated, *a surface tension below 29 dynes/cm appears to be a necessary but not sufficient requirement.* Given a viscosity lower than 14 mm^2/sec, a product having a surface tension of less than 29 dynes/cm could be classified for its aspirability. In other words, in the absence of professional judgement, surface tension could be used as an additional criterion to viscosity for the classification of consumer products.

INTRINSIC FACTORS AS CRITERIA REQUIRING EXPERT JUDGEMENT All other intrinsic factors, namely boiling point, vapour pressure, volatility, water solubility and volume, may characterize a product in such a way as to allow *expert judgement* on the aspirability of consumer products. Furthermore, since boiling point is commonly defined in terms of a direct proportionality relationship with vapour pressure and volatility, and since it is found more regularly in handbooks and textbooks of Chemistry and Physics, it can adequately replace volatility and vapour presure and represents the

most adequate parameter of all three to evaluate the hazard of aspiration. As a result, one is left with the following three parameters to exercise professional judgement in predicting aspiration hazard: boiling point, water solubility and volume.

Boiling point Organic substances having normal boiling points below 50°C demonstrate low or zero propensity to reaching the lower respiratory tract and to causing aspiration in spite of low viscosity. Above that temperature, it is difficult to see any pattern linking boiling point to a method of predicting aspiration hazards (Table 1).

Water solubility Only when water is present at the aspiration site can the hydrosolubility of a substance be considered a valuable criterion towards predicting the risk of aspiration. The two important sources of water at that site are 1) as a consumer product solvent, 2) as vomitus. In either case, everything else being equal, the more hydrosoluble the product, the lesser the risk of aspiration (Table 1). This effect of water dilution on aspiration hazard would be consistent with a concomitant increase in viscosity, but would be contrary to a decrease. Since water has a very low viscosity (1 cSt), it is inconceivable that water dilution would contribute to decrease the fluidity (i.e. increase the viscosity) of substances having a viscosity greater than 1 cSt. This dilution effect is therefore believed to be independent of viscosity. Nevertheless, the surface tension of water being 72 dynes/cm, it is conceivable that such an effect on aspiration hazard might be secondary to a possible increase in surface tension, as a pure organic compound is mixed in aqueous solutions.

Volume The minimum volume required to produce aspiration will undoubtedly vary with the more important intrinsic factors, such as viscosity, and also with the extrinsic factors. From the minimal volume used in experimental studies, we have calculated, for a child, a Lowest Aspiration Effective Volume of 0.08 ml/kg (LOAEV) for low viscosity solvents, e.g. petroleum distillates, by applying an uncertainty factor of 10 for extrapolation to humans. Multiplying by 10 or 20, one obtains the calculation that a 10 or 20 kg child would encounter an aspiration hazard when swallowing 0.8 or 1.6 ml of petroleum distillate, respectively. However, in view of the preponderance of other factors over volume, this LOAEV per body weight ratio could decrease dramatically in adult age groups. For instance, common experience suggests that volumes much less than either that of a swallow (5 ml)[67] or the calculated minimum LOAEV value of *5.6 ml* for a 70 kg person (i.e. 0.08 ml/kg x 70 kg = 5.6 ml) may cause aspiration in an adult.

No data were identified regarding the effect of increasing volume on the risk and sequellae of aspiration. However, a large volume in the laryngopharyngeal region is likely to impede physiological defense mechanisms and increase the risk.

MOST IMPORTANT INTRINSIC FACTORS Viscosity and surface tension are the most important inherent properties of a liquid substance in initiating aspiration through the respiratory system. By definition, low viscosity and low surface tension favor the flow and the spread, respectively, of a liquid through lower parts of the respiratory tract. Both the flow and the spread are keys to initiating and completing the events that define aspiration.

EXTRINSIC FACTORS

Physical chemical characteristics of endogenous and exogenous substances It is expected that any endogenous or exogenous substances present at the time of aspiration will either concentrate or dilute the adverse effect of the chemical product of concern. This may be secondary to a direct influence on one or more intrinsic factors of that product, and is likely to be identical to pharmacological interactions as we know them.

Stimulatory and inhibitory mechanisms Any complications of either the upper respiratory or the upper digestive tract or both could facilitate rather than impede aspiration processes. Normal physiological processes would tend to have the opposite effect.

The laryngopharyngeal region makes up the crossroad of the upper respiratory and digestive tracts. The degree of coordination among various anatomic structures such as the glottis and epiglottis, located at this crossroad, plays a role in aspiration events. Although their functions appear to be automatic, a minimum degree of attention to the swallowing act may help prevent aspiration. This is supported by the observation that some choking incidents occur by inadvertence or as a result of momentary lack of attention or a state of unconsciousness. Any participation of the central nervous system is likely to produce some physical effort accompanying the development of inhibitory mechanisms. When that is the case, such inhibitory mechanisms can be thought of as real defense mechanisms against full completion of aspiration processes.

Aspiration, irritation, toxicity Viscosity, surface tension, and reflex mechanisms are important in initiating the process of aspiration. Application of these criteria would be consistent with a classification by product types. Irritation and toxicity contribute to worsening the outcome of aspiration. However, the variability of irritation and toxicity with products and product types makes it difficult to classify the pathological consequences. This is, of course, a problem of medical management and therapeutics.

Conclusions It can be concluded that it is practical to use the hazard of aspiration in a hazard-based criteria scheme for consumer products regulations. Such a scheme can be implemented through labelling.

Here follows the description of a two-tier system for addressing the regulatory concerns for aspiration hazards. Both tiers are based primarily on viscosity and surface tension. They are distinguished by the availability or unavailability of professional judgement.

In the absence of adequate expertise, viscosity and surface tension are the most important criteria for use in assessing the hazard of aspiration. These two parameters should be used to label a product as presenting a hazard of aspiration, but not to indicate the contrary. If, as such, they are perceived as measurements of risk rather than safety, *then in the rare occasions where the label would be wrong, as in the case of methyl alcohol, one would err on the side of safety*. Such occasions can be avoided by appropriate communications between the regulator and the manufacturer or distributor who lacks the required professional advice.

When appropriate expertise is available, the hazard of aspiration can be

more fully appraised, particularly in the case of substances which have a viscosity equal to or greater than 14 centiStokes and/or a surface tension equal to or greater than 29 dynes/cm. Substances to target are those having boiling points above 50°C, poor hydrosolubility, and nauseous and emetic properties.

Larger volume essentially increases the risk of aspiration because it causes the liquid to be forced downward towards the lungs, opposing the physiological mechanisms of expulsion. The force it creates tends to disturb or overwhelm any physical chemical relationships between viscosity, surface tension and aspiration. Therefore, volume or size of contents in containers are factors to consider in regulations and labelling.

Since a consumer product is generally sold as a mixture, it is important to consider the physical chemical properties of all substances present as they affect the potential for aspiration of the product as a whole. The relevance of such substances is a function of their effects on the physical chemical properties of the latter, especially its viscosity and surface tension.

Finally, consideration of reflex mechanisms of the upper respiratory and upper digestive tracts, as well as the level of consciousness of the consumer, may help in targeting portions of the population which are at higher than average risk, and circumstances that put consumers at risk. These are, respectively, newborns, young infants, the sick or convalescing elderly and circumstances such as anesthesia, inadvertence and loss of consciousness.

For the purpose of labelling, the first two determining factors of aspiration, namely viscosity and surface tension, could be used to identify the hazard and may have front panel priority. On the other hand, consideration of the less important intrinsic factors, as well as the extrinsic factors, may provide material for the inferior level of the front panel or for the back panel of a label. For example, negative statements should be considered to indicate the incompatibility of the product of concern with other substances, relative to the risk of aspiration. Similar statements will be needed with respect to level of consciousness as well.

Recommendations The present report recommends no new legislation to address aspiration hazards of *solids* as applicable in Canada. It focuses on *liquid* materials and provides a *two-tier system applicable to regulations*, as part of a *hazard-based criteria scheme*.

It is recommended that both tiers be based primarily on *viscosity and surface tension*, and distinguished by the *presence or absence of professional judgement*.

In the absence of professional judgement, the first tier should be used to label and warn the consumer against the hazard of aspiration of liquid substances which have a viscosity of less than 14 mm^2/sec at 38°C (14 centiStokes = 73.4 Saybolt Universal Seconds) and/or a surface tension of less than 29 dynes/cm (milliNewtons/meter).

When appropriate expertise is available, the second tier should be used, based on the same viscosity and surface tension criteria as *the first tier except to exempt from labelling* products which do not actually present an aspiration hazard according to the following prioritized factors: *viscosity > surface tension > boiling point/volatility > hydrosolubility > emetic properties > substances interactions*.

Furthermore, it is suggested that regulations based on the first tier can be

improved by providing, through expert judgement, *a list of substances not obeying the viscosity/surface tension cut-off guideline.*

Finally, it would be worthwhile for governments, industry and emergency clinics to collect data on aspiration cases in higher risk groups, such as newborns, young infants, the sick or convalescing elderly, as well as those caused by inadvertance or loss of consciousness.

References

1 Gerarde HW, Ahlstrom DB. The aspiration hazard and toxicity of a homologous series of alcohols. Arch Environ Health 1966;13:457-61.

2 Hamilton WC. Death from drinking coal oil. Med News 1897;71:214.

3 Lesser LI, Weems HS, McKey JD. Pulmonary manifestations following ingestion of kerosene. J Pediat 1943;23:352-64.

4 Deichmann WB, Kitzmiller KV, Witherup S, Johansmann R. Kerosene intoxication. Ann Int Med 1944;21:803-23.

5 Mendelson CL. The aspiration of stomach contents in the lungs during obstetric anesthesia. Am J Obstet Gynecol 1946;52:191-205.

6 Weast RC, Astle MJ, Beyer WH, editors. CRC Handbook of Physics and Chemistry. Cleveland, Ohio: The Chemical Rubber Co, 65th edition, 1985.

7 Levine IN. Physical Chemistry. New York: McGraw-Hill Book Company, 1988:473-81.

8 Atkins PW. Physical Chemistry. Oxford, Melbourne, Tokyo: Oxford University Press, 1990:131-53.

9 Gerarde HW. Toxicological studies on hydrocarbons.IX. The aspiration hazard and toxicity of hydrocarbons and hydrocarbon mixtures. Arch Environ Health 1963;6:329-41.

10 Ring R, Nelson JD. Hydrocarbon pneumonitis in rats. Arch Environ Health 1966;13:749-52.

11 Jubran A, Greenberg SD, Solomon MD, Noall M, Tobin MJ. Aspiration injury due to polyacrylamide gel. Chest 1992;101:576-8.

12 Fraire AE, Shahab I, Greenberg SD, Jubran A, Noall M. Experimental polyacrylamide-induced acute injury in rat lung. Chest 1992;102:1591-4.

13 Carlile PV, Hagan SF, Gray BA. Perfusion distribution and lung thermal volume in canine hydrochloric acid aspiration. J Appl Physiol 1988;65:750-9.

14 Goldman G, Welbourn R, Klausner JM, Alexander S, Kobzik L, Valeri CR, Shepro D, Hechtman HB. Attenuation of acid aspiration edema with phalloidin. Am J Physiol 1990;259 (Lung Cell Mol Physiol 3):L378-83.

15 Porembka DT, Kier A, Sehlhorst S, Boyce S, Orlowski JP, Davis K. The pathophysiologic changes following bile aspiration in a porcine lung model. Chest 1993;104:919-24.

16 Panson RD, Winek CL. Aspiration toxiciy of ketones. Clin Toxicol 1980;17:271-317.

17 Gosselin RE, Smith RP, Hodge HC, Braddock JE. Clinical Toxicology of Commercial Products. Baltimore, Los Angeles: Williams and Wilkins, 1984:III220-6, III393-5.

18 Rowedder E. Zunehmende Inzidenz von Kinderunfallen mit Lampenol. [Increasing lamp oil poisoning in childhood.] Schweiz Rundsch Med (PRAXIS) 1988;77:969-72.

19 Schwartz WK, Gordon B. Gasoline ingestion. JAMA 1979;242:1968-9.

20 Barrière A, Gonzales D, Meyrieux J, Dissait F. Intoxication par l'eau écarlate: à propos d'un cas mortel chez l'enfant. Cah Anesthésiol 1987;35:125-7.

21 Reese E, Kimbrough RD. Acute toxicity of gasoline and some additives. Environ Health Persp 1993;101 (Suppl. 6):115-31.

22 Bologna NA, Woody NC. Kerosene poisoning. New Orleans Med Surg J 1948;101:256-60.

23 Singh H, Chugh JC, Shembesh AM, Ben-Musa AA, Mehta HC. Management of accidental kerosene ingestion. Ann Trop Paediatr 1992;12:105-9.

24 Hahn A, Wolski M, Michalak H, Altmann H, Jaensch U, Heinemeyer G. Poisonings with lamp-oils in the Federal Republic of Germany – Does Eastern-Germany copy all the "western" risks? XVIth Congress of the European Association of Poison Centres and Clinical Toxicologists, 1994.

25 Lewin PK. Pneumonitis following ingestion of "safe" household products (Letter). Pediat Emerg Care 1991;7:125.

26 Deichman WB, Gerarde HW. Hazards of alkaline laundry detergents. JAMA 1972;200:1014-5.

27 Einhorn A, Horton L, Altieri M. Serious respiratory consequences of detergent ingestions in children. Pediatrics 1989;84:472-4.

28 Oberdisse U, Hahn A, Ritter S. Observation on tolerance in cases of ingestion. In: Gloxhuber C, Künstler K, editors. Anionic Surfactants – Biochemistry, Toxicology, Dermatology – Surfactant Sciences Series. New York, Basel, Hong Kong: Marcel Dekker Inc., 1992; 43:117-25.

29 Rodriguez MA, Martinez MC, Martinez-Ruiz D, Giménez MP, Menéndez M, Repetto M. Death following crude oil aspiration. J Forensic Sci 1991;36:1240-5.

30 Dice WH, Ward G, Kelly J, Kilpatrick WR. Pulmonary toxicity following gastrointestinal ingestion of kerosene. Ann Emerg Med 1982;11:138-42.

31 Repetto M. Toxicologia Fundamental. Madrid: Editorial Cientifico-Medica, 2nd edition, 1988.

32 DeNevasquez S, Haslewood GAD. Endogenous lipoid pneumonia with special reference to carcinoma of the lung. Thorax 1954;9:35-7.

33 Spickard A III, Hirschmann JV. Exogenous lipoid pneumonia. Arch Intern Med 1994;154:686-92.
34 Laughlen GF. Studies on pneumonia following nasopharyngeal injections of oil. Am J Pathol 1925;1:407-14.
35 Pinkerton H. Oils and fats: their entrance into and fate in the lungs of infants and children; clinical and pathologic report. Am J Dis Child 1927;33:259-85.
36 Ikeda K. Oil aspiration pneumonia (lipoid pneumonia): clinical, pathologic, and experimental considerations. Am J Dis Child 1935;49:985-1006.
37 Sodeman WA, Stuart BM. Lipoid pneumonia in adults. Ann Intern Med 1946;24:241-53.
38 Volk BM, Mathanson L, Losner S, Lade WR, Jacobi M. Incidence of lipoid pneumonia in a survey of 389 chronically ill patients. Am J Med 1951;10:316-24.
39 Sundberg RH, Kirschner KE, Brown MJ. Evaluation of lipoid pneumonia. Dis Chest 1959;36:594-601.
40 Reyes de la Rocha S, Cunningham JC, Fox E. Lipoid pneumonia secondary to baby oil aspiration. Pediatr Emerg Care 1985;1:74-80.
41 Ferguson GT, Miller YE. Occult mineral oil pneumonitis in anorexia nervosa. West J Med 1988;148:211-3.
42 Prakash UBS, Rosenow EC III. Pulmonary complications from ophthalmic preparations. Mayo Clin Proc 1990;65:521-9.
43 Perrot LJ, Palmer H. Fatal hydrocarbon lipoid pneumonia and pneumonitis secondary to automatic transmission fluid ingestion. J Forens Sci 1992;37:1422-7.
44 Brimblecombe FSW, Crome L, Tizard JPM. Oil aspiration pneumonia in infancy. Arch Dis Child 1951;26:141-8.
45 Craig JD. Poisoning by the volatile oils in childhood. Arch Dis Child 1958;28:475-83.
46 Jacobziner H, Raybin HW. Turpentine poisoning. Arch Pediatr 1961;78:357-64.
47 Ng RC, Darwish H, Stewart DA. Emergency treatment of petroleum distillate and turpentine ingestion. Can Med Assoc J 1974;111:537-40.
48 Brook MP, McCarron MM, Mueller JA. Pine oil cleaner ingestion. Ann Emerg Med 1989;18:391-5.
49 Cornacchia DJ, Snyder CH, Dupont DC, Yaron NS. Exogenous lipoid pneumonia. J Am Osteopathol Assoc 1989;89:659-63.
50 Buxton JT, Hewitt JC, Gasden RH, Bradham GB. Metallic mercury embolism: Report of cases. JAMA 1965;193:573-5.
51 Zimmerman JE. Fatality following metallic mercury aspiration during removal of a long intestinal tube. JAMA 1969;208:2158-60.
52 Dzau VJ, Szabo S, Chang YC. Aspiration of metallic mercury. JAMA 1977;238:1531-2.
53 Janus C, Klein B. Aspiration of metallic mercury: clinical significance. Brit J Radiol 1982;55:675-6.
54 Bynum LJ, Pierce AK. Pulmonary aspiration of gastric contents. Am Rev Resp Dis 1976;114:1129-36.
55 Nishino T, Takizawa T, Yokokawa N, Hiraga K. Depression of the swallowing reflex during sedation and/or relative analgesia produced by inhalation of 50% nitrous acid in oxygen. Anesthesiology 1987;67:995-8.
56 Brand JM, Brodsky NL, Hurt H. Avoiding the risk of aspiration in intubated infants. J Am Osteopathol Assoc 1989;89:175-6.
57 Bricker SR , McLuckie A, Nightingale DA. Gastric aspirates after trauma in children. Anaesthesia 1989;44:721-4.
58 Sekizawa K, Ujie Y, Itabashi S, Sasaki H, Takishima T. Lack of cough reflex in aspiration pneumonia. Lancet 1990;355:1228-9.
59 Nakazawa H, Sekizawa K, Ujie Y, Sasaki H, Takishima T. Risk of aspiration pneumonia in the elderly. Chest 1993;103:1636-7.
60 Rout CC, Rocke DA, Gouws E. Intravenous ranitidine reduces the risk of acid aspiration of gastric contents at emergency cesarean section. Anesth Analg 1993;76:156-61.
61 Rocke DA, Rout CC, Gouws E. Intravenous administration of the proton pump inhibitor omeprazole reduces the risk of acid aspiration at emergency cesarean section. Anesth Analg 1994;78:1093-8.
62 Reed CB. Fetal death during labor. Surg Gynecol Obstet 1918;26:545-51.
63 Saling EW. Fetal scalp pH sampling. Arch Gynaek 1963;198:82-6.
64 Government of Canada. Consumer Chemicals and Containers Regulations. Consolidation of the Hazardous Products Act 1993; Sections 37-39: pages 28-31.
65 Consumer Product Safety Commission of the United States of America. Federal Hazardous Substances Act Regulations 1992; Subchapter C, Part 1501, pages 422-5.
66 Litovitz T, Greene AE. Health implications of petroleum distillate ingestion. Occupational Medicine: State of the Art Review 1988;3:555-67.
67 Jones DV, Work CE. Volume of a swallow. Am J Dis Child 1961;102:427.

REVIEW OF THE *CONSUMER CHEMICALS AND CONTAINERS REGULATIONS*

Rationale for the Proposed Revisions to the *Consumer Chemicals and Containers Regulations*

April 1, 1995

REVIEW OF THE *CONSUMER CHEMICALS AND CONTAINERS REGULATIONS*

Rationales for the Proposed Revisions to the
CONSUMER CHEMICALS AND CONTAINERS REGULATIONS
April 1, 1995

TABLE OF CONTENTS

	Page
Introduction	1
Part I - Criteria	
1. Toxic Products	1
2. Chronic/SubChronic Toxicity	29
3. Flammable Products	29
4. Pressurized Containers	40
5. Adhesives That Quickly Bond Skin	42
6. Corrosive Products	43
7. Irritant Products	43
8. Child Resistant Containers	44
9. Containers Filled By the User	47
Notes To Part I	48
Part II - Labelling	
10. General Labelling Requirements	51
11. Required Label Items	53
12. Format of Required Label Items	57
13. Content of Required Label Items	
i) All Hazard Categories	66
ii) Toxic Products	68
iii) Corrosive Products	72
iv) Flammable Products	76
v) Pressurized Containers	81
vi) Adhesives That Quickly Bond the Skin	82
Notes To Part II	84
Part III - Packaging	
14. General Packaging Requirements or Guidelines	88
15. Child-Resistant Packaging	95
16. Pressurized Containers	100
Bibliography For Part III	102

LIST OF TABLES

		Page
1.	Toxicity Criteria	7
2.	Upper Toxicity Limit for Human Fatalities	8
3.	Substances Which Cause Fatalities Via Dermal Exposure	8
4.	Substances Which Cause Fatalities Via Oral Exposure	9
5.	Gases Which Cause Animal Fatalities	10
6.	Vapours Which Cause Animal Fatalities	10
7.	Dermal Area Available for Exposure	14
8.	Comparison of Proposed Toxicity Criteria With Other Systems	14
9.	Substances That Pose an Aspiration Hazard	23
10.	Classification of Substances of Special Concern	26
11.	Flammability Criteria	31
12.	Flammable Liquid Fire Statistics	32
13.	Example Classification of Gases	33
14.	Example Classification of Flammable Solids	38
15.	Size of the Primary Hazard Statement	59
16.	Size of the specific Hazard Definition, Instructions and First-Aid Statements	60
17.	Labelling of Toxic and Harmful Products	68
18.	Labelling of Corrosive and Irritant Products	72
19.	Labelling of Flammable, Combustible and Spontaneously Combustible Products	77
20.	Labelling of Pressurized Containers	81
21.	Labelling of Adhesives that Quickly Bond the Skin	83

Rationale for the Proposed Revisions to the *CONSUMER CHEMICALS AND CONTAINERS REGULATIONS*

April 1, 1995

Introduction

The review of the *Consumer Chemicals and Containers Regulations* was initiated in 1988 to strengthen the Regulations by rationalizing criteria to define consumer chemical products as hazardous, and by improving the labelling and packaging requirements. The report presents the recommendations of the Steering Committee of the review for revising the Regulations, and provides the rationales for the recommendations.

RECOMMENDATIONS AND RATIONALES

PART I - CRITERIA

1. Toxic Products

i) Hazard Category and Sub-Categories

Recommendation

That the *Consumer Chemicals and Containers Regulations* be revised to establish a hazard category for toxic consumer products.

Recommendation

That the toxicity hazard category be divided into three sub-categories: Extremely Toxic, Toxic and Harmful, which may be referred to as Divisions 1, 2 and 3 (Division 1 = Extremely Toxic; Division 2 = Toxic; Division 3 = Harmful respectively).

Recommendation

That the *Consumer Chemicals and Containers Regulations* be revised to require that Extremely Toxic products only be sold with the express prior permission of Health Canada. Permission should only be given when the products can be shown to provide benefits that outweigh the high degree of hazard, and when no other less hazardous alternatives are readily available. Health Canada would be free to refuse or to make the permission subject to restrictions on the packaging, labelling or conditions of sale.

Rationale

The current *Consumer Chemicals and Containers Regulations* define three levels of hazard for toxic products (with signal words DANGER, WARNING and CAUTION). The difference between the levels are not understood by consumers, as shown by survey conducted in 1989 by Gallup Canada, and have little impact upon consumer behaviour. Gallup found:

> "Respondents generally are unsure as to the reasons that hazard frames are used."
>
> "As for the meaning of the frames respondents overall are less sure of the meanings of the frames than they are of symbols. At best, just over one-third could identify the frame used to designate danger. At worst, just under a quarter could identify the frame used to designate warnings."[1]

The information conveyed by the degree of hazard frames is in many cases not of great use to consumers. Products which pose any level of hazard should be handled with care and stored out of reach of children; the knowledge and facilities to make more sophisticated responses to variations in the level of hazard are not available to the average consumer.

Some degree of differentiation between levels of toxicity is of use to emergency medical personnel and poison-control centres. Therefore, the recommendation is that there be two levels, Toxic and Harmful (Divisions 2 and 3, respectively), for the range of products normally dealt as consumer chemical products, simplifying somewhat the classification but providing poison control centres with an indication of the general range of toxicity.

The Extremely Toxic sub-category (Division 1) is intended for products which are too hazardous to be routinely dealt to consumers lacking the specialized knowledge and training to use such substances. No known consumer products currently on the market would fall into this sub-category. Various ingredients of several consumer products would fall in the Extremely Toxic sub-category if sold in pure form, but they are usually mixed with other less toxic ingredients, rendering the product as a whole less toxic. The Bureau has received complaints from law enforcement agencies of extremely toxic materials intended for and packaged for professional use being sold to consumers - sodium cyanide, for example, was sold to a Montreal man who used it to commit suicide in 1992 (Product Safety Bureau Complaint System). There is at present no means of ensuring that this does not occur, short of separately listing each extremely toxic substance in Part I of Schedule I to the *Hazardous Products Act*. This would require that the extremely toxic substances and product types be identified in advance, which is not possible as they are not routinely dealt to the public.

ii) Criteria to Define Products as Toxic

Recommendation - *Human Experience*

That human experience take precedence over data from animal experimentation in categorizing products as toxic. A requirement that human data shall be evaluated and given precedence should precede the specific criteria. A suggested wording is:

> "Reliable human data shall be taken into account in determining the appropriate classification of a product. When such data give valid results different from results with animal testing, the human experience takes precedence."

Rationale - *Human Experience*

Human experience is the best indicator of the potential hazard that a material poses, in view of the variability in response to toxic materials between individuals and between species. However, human data is not available for many substances, making it necessary to accept animal test data.

The *Controlled Products Regulations* (WHMIS) do not specifically mention human data, but suppliers are expected to use human data in arriving at a classification.[2] WHMIS Information Bulletin No. 8 (1991) states that:

> "If the supplier finds "sufficient" human data to show that the product meets or does not meet a [toxicological] criterion, the supplier may use this information to classify the product. Professional judgement must be used in making an assessment of what is "sufficient" in each case and taking into account animal test results."

The *Transportation of Dangerous Goods Act, 1992* indirectly accommodates human data. Many chemicals which do not meet the published toxic hazard criteria are listed in Schedule II of the regulations on the basis of expert judgement which may include considerations of human experience.[3]

Regulations respecting consumer products in the United States and the European Community (EC) require that reliable human data be taken into account in determining the appropriate classification of a product.[4] When such data give reliable results different from results with animal data, the human experience takes precedence. No detailed guidance or criteria are given as to what is reliable data.

Recommendations - *Use of LD_{50} and LC_{50} Values*

That LD_{50} and LC_{50} values from tests conducted according to the OECD Test Guidelines for acute toxicity testing be adopted as the core of the criteria scheme.

That alternative tests such as the up-and-down method not be referenced at this time, but their use be encouraged. That where their are not tests carried out in accordance with the applicable OECD Test Guidelines, the results of any other acute toxicity test carried out in accordance with generally accepted standards of good scientific practice at the time the test is carried out be accepted.

Rationale - *Use of LD_{50} and LC_{50} Values*

A central aspect of the criteria scheme is toxicity test data, which must be comprehensive, reliable, and highly correlated to human outcomes of concern. The referenced tests must meet high standards of validity, regulatory acceptability and availability of data. It is desirable to select only those tests which have been thoroughly validated and for which there is a comprehensive databank of test results, are economical, are reproducible, are readily interpreted and which minimize the need for animal testing. The tendency for all agencies to adopt the same tests, unless scientific advances or strong external factors (such as animal rights) intervene, makes it difficult to introduce a new test and have it accepted for regulatory purposes.

At this time the only tests meeting the selection conditions are the acute toxicity tests of the internationally accepted OECD (Organization for Economic Cooperation and Development) test guidelines and related test protocols. The OECD has published guidelines for acute oral, dermal and inhalation toxicity tests. The acute toxicity tests are practical indicators of the acute toxic hazard of chemicals to humans. The purpose of the tests is to establish the degree of toxicity of a substance relative to the dose and route of exposure, in comparison to substances of known toxicity. The tests are straightforward and relatively inexpensive.[5]

The tests permit the calculation of the median lethal dose (LD_{50}) and median lethal concentration (LC_{50}) values of test substances. Acute toxicity data in the form of LD_{50} and LC_{50} values have been produced for tens of thousands of chemicals and are widely available in handbooks, databanks, and manufacturers' material data safety sheets (MSDS's).

LD_{50} and LC_{50} values have limitations as indicators of toxicity of substances to humans. The introduction to the OECD Test Guidelines for Toxicity Testing notes the widespread use of LD_{50} and LC_{50} values in toxicity classification systems, but cautions that:

> "values may vary from study to study and between species or within a species because acute toxicity is influenced by both internal and external factors."

In particular, tests are performed on laboratory animals, usually rodents, which may respond differently to chemicals than humans. For this reason, among others,

the scheme should allow the use of professional judgement and should be open to the use of other toxicity data.

It would be preferable to base criteria on a wider range of toxic effects than just lethality. For example, one might choose the median toxic dose (TD_{50}), defined as the dose causing serious and irreversible toxic effects, including death, in 50% of the test animals. This would help deal with the exceptional chemicals which cause severe toxic effects at doses significantly below those causing lethality. However, there is no universal definition of "serious and irreversible". Very little TD_{50} data is available in a compiled, readily usable form.

Various new toxicity tests are being developed to replace or supplement the LD_{50} and LC_{50} tests. One such test, the Fixed Dose Method, is accepted by the OECD, and a similar test, the Up-and-Down Method, is also being increasingly used. These tests yield estimates of the LD_{50} relative to the fixed doses (for example, greater than 500 mg/kg but less than 2000 mg/kg). Little data is yet available from these alternative tests, but their use is expected to increase because they use fewer animals and are less expensive. It is therefore recommended that although these tests not be specifically referenced, they be recognized as a valid basis for a classification based upon professional judgement.

Recommendations - *Professional Judgement*

That professional judgement take precedence over the use of a mathematical formula in estimating the toxicity hazard.

That LD_{50} and LC_{50} may be estimated using professional judgement.

That a requirement regarding professional judgement precede the specific criteria. A suggested wording is:

> "For the purpose of establishing that a product, material or substance is toxic, the responsible party shall use,
>
> a) results from testing that have been carried out with respect to the product, material or substance; or
> b) evaluation and scientific judgement based on test results with respect to
> i) the product, material or substance, or
> ii) where appropriate, a product, material or substance that has similar properties.
>
> For the purposes of establishing that a product, material or substance is or is not toxic, the supplier may use information of which the responsible party is aware or ought reasonably to be aware in place of the criteria."

Rationale - *Professional Judgement*

Adequate, reliable data may not be available for all ingredients of a product, for various reasons: a chemical may have been considered non-toxic and not worth testing (e.g., many polymers); it may be essentially identical to others in a family (e.g., petroleum distillates or lead salts); or the only available data may be semi-quantitative or derived from non-standard tests or sources. In all of these cases, professional judgement is needed to estimate the toxicity of the material and apply the criteria.

All of the reference criteria schemes (*Controlled Products Regulations* (WHMIS)), *Transport of Dangerous Goods Act, 1992*, US Occupational Safety and Health Act (OSHA), US Hazardous Substances Act, European Economic Community) explicitly require professional or scientific judgement as part of the classification process.

The intention of the recommendation is that professional judgement be based on sound scientific and technical principles.

Recommendation - *Sources of Values*

That in cases of disagreement between differing sources on values (for LD_{50}'s, LC_{50}'s, etc.), the original literature source be the reference, conditional upon the original literature being published in a peer approved journal or through some other recognized channel.

Rationale - *Sources of Values*

Published values for the toxicity test data for some substances vary greatly from publication to publication. The variance is in some cases due to errors rather than differences in actual test results. For, example, during the course of the review, it was noted that published values for the LC_{50} of mineral spirits, a very common solvent and thinner, were originally published as being much greater than 1400 ppm. This value was later reproduced in many references as being equal to 1400 ppm, changing the classification. The recommendation will ensure that disputes over the classification of a product may be settled by reference to a single source subject to professional review.

Recommendation - *Criteria - LD_{50} and LC_{50}*

That the criteria to define a product as toxic, in the absence of data on human experience or adequate information on which to base professional judgement, be as follows:

Table 1: Toxicity Criteria

Route of Exposure	Classification	Criteria
Oral	Division 1, "Extremely Toxic"	$LD_{50} \leq 50$ mg/kg
	Division 2, "Toxic"	$50 < LD_{50} \leq 500$ mg/kg
	Division 3, "Harmful"	$500 < LD_{50} \leq 2000$ mg/kg
Dermal	Division 1, "Extremely Toxic"	$LD_{50} \leq 200$ mg/kg
	Division 2, "Toxic"	$200 < LD_{50} \leq 1000$ mg/kg
	Division 3, "Harmful"	$1000 < LD_{50} \leq 2000$ mg/kg
Inhalation - Gases (4-hour LC_{50}'s)	Division 1, "Extremely Toxic"	$LC_{50} \leq 2500$ ppm
	Division 2, "Toxic"	no division 2 for gases
	Division 3, "Harmful"	$2500 < LC_{50} \leq 5000$ ppm
Inhalation - Vapours (4-hour LC_{50}'s)	Division 1, "Extremely Toxic"	$LC_{50} \leq 1500$ ppm
	Division 2, "Toxic"	$1500 < LC_{50} \leq 2500$ ppm
	Division 3, "Harmful"	$2500 < LC_{50} \leq 10{,}000$ ppm
Inhalation - Dusts, mists, fumes (4-hour LC_{50}'s)	Division 1, "Extremely Toxic"	$LC_{50} \leq 0.5$ mg/L
	Division 2, "Toxic"	$0.5 < LC_{50} \leq 2.5$ mg/L
	Division 3, "Harmful"	$2.5 < LC_{50} \leq 5.0$ mg/L

Rationale - *Criteria - LD_{50} and LC_{50}*

The following guiding principles were adopted.

1. Criteria from the *Controlled Products Regulations* (WHMIS) and *Transportation of Dangerous Goods Act, 1992* were accepted as satisfactory for healthy working adults and work exposures, including emergencies.

2. Criteria for consumer chemical products must take into account the increased uncertainties of uncontrolled conditions of use, potential exposure of diverse sensitive populations, and the potential for accidents and misuse.

3. Human data gives some guidance on the upper limits of the toxicities of products which have caused fatalities.

Table 2: Upper Toxicity Limits for Human Fatalities

Route of Exposure	Toxicity Limit for Human Fatalities
Oral	2000 mg/kg
Dermal	2000 mg/kg
Inhalation - gases	- No limit, but substances of major concern below 2000 ppm
- vapour	- 5,000 - 10,000 ppm
- dusts/mists	- Inadequate data

4. Harmonization, when justifiable, with the *Controlled Products Regulations* (WHMIS) and *Transportation of Dangerous Goods Act, 1992* and proposed international limits, was an objective.

Identification of the least toxic substances which have caused death helps in identifying the upper limit for acute toxicity criteria (least toxic = highest LD_{50} or LC_{50}). There is, however, very limited data on the actual toxicities of the ingredients of consumer products, because most consumer products are formulations containing more than one toxic chemical. There is far more information available on the toxicities of drugs and pesticides, but the conditions of exposure are quite different and may not be applicable to establishing criteria for consumer products.

Consumer Substances Which Have Caused Death in Humans

Dermal [6,7,8]

Very little data is available on the doses of consumer chemicals which have caused fatal poisonings in humans by skin absorption. In part, this is because many common consumer chemicals are slightly or non-toxic by this route (dermal LD_{50} exceeding 5000 mg/kg). Skin contact is common during use of consumer products, and it is likely that manufacturers of consumer chemical products avoid ingredients chemicals with significant dermal toxicity. Some substances, such as butoxyethanol, are more toxic by skin absorption than orally.

Table 3: Substances Which Cause Fatalities Via Dermal Exposure

Substance	Estimated LD_{50}	
	Human	Animal
Cresol	2000 mg/kg	1800 mg/kg
Phenol	200 mg/kg	850 mg/kg
Butoxyethanol	Not available	400 mg/kg

Cresol and phenol have caused many serious and fatal poisonings by skin absorption. No examples were found of substances causing human poisoning at doses over 2000 mg/kg.

Oral [6,7,8]

Well-known poisons such as potassium cyanide, sodium fluoride and sodium oxalate have very low LD_{50}'s. Some less toxic substances have caused deaths because of special circumstances such as mild taste (ethylene glycol), even though the lethal dose is large (over 100 mL). It appears that very rarely does a substance with an oral LD_{50} over 2000 mg/kg cause lethal poisoning.

Table 4: Substances Which Cause Fatalities Via Oral Exposure

Substance	Estimated LD_{50}	
	Human	Animal
Acrylic acid	70 mg/kg	250 mg/kg
Cresol	2000 mg/kg	800 mg/kg
Ethylene glycol	< 2000 mg/kg	5890 mg/kg
Isopropyl alcohol	1750 mg/kg	4420 mg/kg
Naphthalene	70-200 mg/kg	530 mg/kg
Potassium cyanide	3 mg/kg	10 mg/kg
Sodium chlorate	130-400 mg/kg	1200 mg/kg
Sodium fluoride	70-140 mg/kg	50 mg/kg
Sodium oxalate	160 mg/kg	675 mg/kg

Inhalation

The inhalation of gases, vapours and dusts/mists are examined separately because of significant differences in their physical properties and conditions of exposure.

Gases [6,7,8]

There is no limit to the achievable concentration of gases in air. Even relatively non-toxic gases such as carbon dioxide have caused fatalities from exposure to high concentrations (above 200,000 ppm) in confined spaces resulting, for example, from faulty refrigeration.

Most gases used in consumer products, such as propellants, are relatively non-

toxic. The following are LC_{50} values from animal tests for some of the toxic gases which may be used in consumer products, several of which have caused fatalities.[8]

Table 5: Gases Which Cause Animal Fatalities

Substance	LC_{50} (4-hour exposure)
Ammonia	2000 ppm
Chlorine	70 ppm
Formaldehyde	226 ppm
Hydrogen chloride	1560 ppm
Hydrogen fluoride	550 ppm
Ozone	6 ppm
Sulphur dioxide	1260 ppm

Vapours[6,7,8]

The following table gives LC_{50} values from animal tests for some vapours which may be emitted by consumer products.

Table 6: Vapours Which Cause Animal Fatalities

Substance	LC_{50} (4-hour exposure)
Benzene	16,000 ppm
n-Butanol	8,000 ppm
Ethyl acetate	10,400 ppm
Methyl methacrylate	3,800 ppm
Styrene	2,800 ppm
Tetrachloroethylene	5,200 ppm
Toluene	8,000 ppm
1,1,1-Trichloroethane	12,000 ppm

The concentrations of vapours in air cannot exceed the saturation vapour concentration (SVC), which is a function of the vapour pressure of the material. The evaporation rate is also important in reaching toxic concentrations.

For example, 1,1,1-trichloroethane has caused many occupational and non-occupational fatalities while xylene has caused very few, even though 1,1,1-

trichloroethane is less toxic (LC_{50} = 12,000 ppm) than xylene (LC_{50} = 5000 ppm). This is because 1,1,1-trichloroethane is extremely volatile (relative evaporation rate of 13 and saturation vapour concentration of 167,000 ppm) while xylene is much less volatile (relative evaporation rate of 0.7 and saturation vapour concentration of 10,000 ppm).

No documentation was located on human fatalities from inhalation of most potentially toxic vapours, except for solvent abuse. The most common causes of non-occupational fatalities appear to have been gasoline and petroleum distillates (e.g., paint solvents) in confined spaces without documentation of exposure levels.

Dusts/Mists

The major human information on serious acute poisonings by particulates relates to inhalation of metal fumes (cadmium, copper, lead, manganese, zinc and some other substances). Fumes are particularly dangerous because the freshly formed particles are highly respirable (extremely small and able to penetrate deep into the lungs). Dusts and mists, as they might be encountered in consumer products, are usually too large to be respirable.

LC_{50} values available for dusts and mists were mostly for corrosive materials not applicable to this project. There is inadequate relevant human or animal data for dusts and mists.

Consumer, Workplace and Transportation Hazards

Criteria schemes already exist in the Canadian Workplace Hazardous Materials Information System (WHMIS) and *Transportation of Dangerous Goods Regulations*. However, conditions of use, risks and patterns of exposure, and other factors can be quite different for consumer chemical products, workplace materials, and dangerous goods in transport.

WHMIS is an information system applying to all chemicals used in workplaces (except those specifically excluded in the legislation). Materials meeting WHMIS criteria are subject to requirements for MSDS's, labels, and worker training. Virtually any chemical in existence could be manufactured or used in a workplace, including extremely toxic chemicals, because adequate control systems and personal protective equipment can be implemented as required. WHMIS applies to exposures both during normal use in the workplace and in case of a spill, leak, accident or emergency. Exposures by inhalation and skin contact are normally of greatest concern and accidental ingestion is very unlikely, except indirectly from contaminated hands, drinking water or food.

The *Transportation of Dangerous Goods Act, 1992 (TDG)* and Regulations apply to

chemicals during their transportation, and handling and storage related to transportation. The focus of the TDG system is a trained, adult worker, typically in good health, who may be exposed to chemicals during an accident or spill and who may not have personal protective equipment or engineering control systems. Thus, the TDG criteria are partly relevant to the development of criteria for consumer chemical products. Major differences between the WHMIS and TDG systems on one hand and consumer chemical products on the other are the following.

1. Children are a target population in developing criteria for consumer products, as they may be more sensitive to toxic chemicals than adults, are more likely to use products inappropriately (especially with regard to ingestion), are unable to understand labels and are less able to protect themselves if exposed.

2. Chemical products used in workplaces by trained adults are often in larger quantities than in the home.

3. Ingestion is a significant route of exposure to consumer chemical products.

4. Engineering controls and personal protective equipment are not normally present in homes.

Children as a Vulnerable Population

A goal of the criteria system is to protect the population groups which are most likely to use or be exposed to consumer products. Children are a population of special concern, especially with regard to oral exposure. Canadian, U.S. and European statistics indicate that the majority of poisonings involve children under 6 years of age. Peak exposures occur in children 2-3 years of age.[9]

U.S. statistics for children and adults indicate that accidental poisoning by ingestion is most frequent (76.3%), followed by dermal (7.4%) and inhalation (5.6%) exposures. In children under 6 years of age, most poisonings produce no effect (35%), are non-toxic (42%) or produce a minor effect (13%). A moderate effect is seen in 0.5% of childhood cases, a major toxic effect in 0.05% and death in 0.003% of the cases. US statistics on 1,837,939 reported exposures in 1991 show 764 deaths of which only 117 were due to accidental exposure, while the remainder were due to intentional exposure (576), adverse reaction (17) or unknown reasons. Most of the exposures occurred in the home (92%). Of the 117 deaths, 44 occurred in children under the age of 6 years. In almost all cases, the route of exposure was ingestion. The only significant exception was for inhalation, usually as a result of aspiration.[10]

Relative Sensitivity of Children

Children are a significant portion of the exposed consumer population, and are more sensitive population than adults from two points of view: children are more sensitive toxicologically and pharmacologically. In many cases children, when exposed to the same dose per unit of body weight (mg/kg) of a chemical, experience more (or less) toxicity than adults. Secondly, because of their smaller size, children may receive larger doses of a chemical than adults when exposed in a similar fashion.

A recent major conference and publication addressed the question of the similarities and differences between children and adults, and the implications for risk assessment. There were a number of general conclusions:

1. Children are a unique population for health risk assessment. They do not appear to be systematically more or less sensitive than adults. Susceptibility clearly depends on the substance and the exposure situation. Although there are some chemicals which do affect children more than adults, there are also cases where children are less susceptible. This applies to absorption, metabolism and toxic effects. Thus, there is no evidence that children are consistently more sensitive, from a toxicological viewpoint, to chemicals than adults.

2. There are significant differences in physiology, metabolism, pharmacokinetics, diet, physical environment and behaviour.

3. Larger uncertainty factors may be needed for exposed populations, which include children.[11]

The following exposure estimates are based on data from "Similarities and Differences between Children and Adults".

1. Oral Exposure

A typical accidental exposure for a child (10 kg body weight) is a 5 mL or 5 gram swallow. This is equal to 5 g/10 kg = 500 mg/kg dose.[10, 12] A typical accidental oral exposure for an adult (70 kg body weight) is a 30 mL or 30 gram swallow. This is equal to 30 g/70 kg = 428 mg/kg dose. Therefore, a child's typical accidental exposure is likely to be slightly more severe than an adult's.

2. Dermal Exposure

Children have about twice as much skin area per unit body weight as adults, but this does not mean that a child would absorb twice the dose of an adult. The absorbed dose (mg/kg) depends on several factors, including the amount of material applied to the skin, the skin area covered, the rate of absorption, and the duration of contact.

Table 7: Dermal Area Available for Exposure

Size	Weight	Surface Area	Ratio
Young child	10 kg	0.47 m^2	0.047 m^2/kg
Adult	70 kg	1.73 m^2	0.025 m^2/kg

Because of their smaller size and larger skin area per unit body weight and behavioral considerations (e.g., less aware of need to remove contaminated clothing), children's dermal exposures could be significantly greater.

3. Inhalation Exposure

The total daily intake of air (weight-adjusted) for infants (1 year) and children (10 years) combined are estimated as 380 and 450 L/kg/day for an average of approximately 420 L/kg/day. The total daily intake of air for adults is estimated as 330 L/kg/day.

Children inhale approximately 25% more air per kilogram per unit time than adults, and may receive larger doses of air contaminants than adults under comparable conditions. Consequently, criteria applicable to adults must be adjusted by an uncertainty factor of two or more to compensate for the increased relative sensitivity of children and greater variability in the response of children to toxicants.[11]

Harmonization

The following table compares the proposed toxicity criteria with other classification systems. Divisions 1 and 2 of the proposed criteria are harmonized with the WHMIS criteria. Division 3, which is harmonized with the classifications currently being proposed by the OECD, provides an extra level of classification to protect children and other vulnerable populations.

Table 8: Comparison of Proposed Toxicity Criteria With Other Systems

Exposure	Proposed Criteria	WHMIS	Proposed OECD
Oral (LD_{50}) (mg/kg)	1 ≤ 50	≤ 50	5 - 50
	2 50 - 500	50 - 500	50 - 500
	3 500 - 2000	(none)	500 - 2000
Dermal (LD_{50}) (mg/kg)	1 ≤ 200	≤ 200	40 - 200
	2 200 - 1000	200 - 1000	200 - 1000
	3 1000 - 2000	(none)	1000 - 2000

Exposure	Proposed Criteria	WHMIS	Proposed OECD
Inhalation - Gases (4-hour LC_{50}) (ppm)	1 ≤ 2500	≤ 2500	125 - 500
	2 (none)	(none)	500 - 2500
	3 2500 - 5000	(none)	2500 - 5000
Inhalation - Vapours (4-hour LC_{50}) (ppm)	1 ≤ 1500	≤ 1500	125 - 500
	2 1500 - 2500	1500 - 2500	500 - 2500
	3 2500 - 10,000	(none)	2500 - 5000
Inhalation - Dusts/mists/fumes (4-hour LC_{50})(mg/L)	1 ≤ 0.5	≤ 0.5	0.125 - 0.5
	2 0.5 - 2.5	0.5 - 2.5	0.5 - 2.5
	3 2.5 - 5.0	(none)	2.5 - 5.0

Recommendation - *Additivity Formulas*

That the use of additivity formulas be considered acceptable in the absence of expertise or data on the complete formulation. The formulas are:

a) for a solid or a liquid,

$$\frac{1}{LD_{50}\ of\ mixture} = \frac{proportion\ of\ ingredient\ A}{LD_{50}\ of\ ingredient\ A} + \frac{proportion\ of\ ingredient\ B}{LD_{50}\ of\ ingredient\ B} + \ldots + \frac{proportion\ of\ last\ ingredient}{LD_{50}\ of\ last\ ingredient}$$

b) for a gas, vapour, dust, mist or fume,

$$\frac{1}{LC_{50}\ of\ mixture} = \frac{proportion\ of\ ingredient\ A}{LC_{50}\ of\ ingredient\ A} + \frac{proportion\ of\ ingredient\ B}{LC_{50}\ of\ ingredient\ B} + \ldots + \frac{proportion\ of\ last\ ingredient}{LC_{50}\ of\ last\ ingredient}$$

(proportion = the weight of the ingredient divided by the weight of the mixture);

For purposes of calculation, a complex mixture of known LD_{50} or LC_{50} may be treated as an ingredient.

Rationale - *Additivity Formulas*

Most consumer products are mixtures. Some are natural mixtures formed as a result of refining, extraction or manufacturing processes, such as gasoline, kerosene, various naphthas and other petroleum distillates. These may have complex composition but defined properties, which allows treatment like pure substances for purposes of classification and labelling. Most mixtures are formulations formed as the result of the combination of specific ingredients in definite proportions. Most formulations are not tested for toxicity, and so their toxicity must be estimated.

The combined effects of mixtures can take three forms.

1. Additive - Components act by similar mechanisms at the same site(s), but toxicokinetic or toxicodynamic interactions are negligible. Substances with similar uses and properties (for example, various petroleum solvents) often have approximately additive toxicity.

2. Independent - Components act by different mechanisms at different sites. For example, one substance may act primarily on the nervous system, while another acts on the lungs. The overall effect is less than additive. The product is classified on the basis of the most severe effect of an ingredient.

3. Interactive (synergistic or antagonistic) - Substances act by different mechanisms at one or more common sites. For example, one substance may inhibit an enzyme which detoxifies the other substance. There can be greater or lesser toxicity than indicated from the effects of the substances alone.

Three different means of dealing with mixtures were considered: cut-offs, the EC approach and the use of additivity formulas.

The simplest form of a cut-off system is that used in the *Controlled Product Regulations* (WHMIS); if a product contains at least 1% of an ingredient meeting a certain criterion, then the product as a whole is assumed to meet the criterion. A 0.1% cut-off is used for certain chronic effects such as carcinogenicity. This approach is simple to apply, but tends to over-classify products, as the classification is the same whether the hazardous material is present at 1% or 99%.

Cut-offs work well with schedules and reference lists. For example, the *Controlled Product Regulations* (WHMIS) reference Schedule II of the *Transportation of Dangerous Goods Regulations*. Any substance listed in hazard class 6.1 (poisonous and infectious substances) is automatically classified as toxic or very toxic in WHMIS, depending on packing group.

The EC has implemented a hybrid approach in a complex but comprehensive system which incorporates criteria based on LD_{50} and LC_{50} values and on other toxic effects in animals and humans. Hundreds of substances have been classified by EC experts and listed in Annex 1 of the system, which is regularly updated. Along with each classification there are concentration limits, either listed in the Annex or derived from a generic table.

For example, a product containing a "very toxic" ingredient will be classified as "very toxic" if the ingredient concentration exceeds 7%, "toxic" if the concentration exceeds 1%, and "harmful" if the concentration exceeds 0.1%. Different concentration limits may be specified for various substances to reflect expert assessments of their hazards.

If a product contains more than one ingredient with a specific classification, then the product classification is obtained by applying a type of additivity formula.

$$P_a/C_a + P_b/C_b + \ldots + P_n/C_n \geq 1$$

P = Percent concentration of the ingredient
C = Concentration limit of the ingredient in percent for the specific classification

If the sum equals or exceeds 1 then the product has that classification.

The EC system is comprehensive and gives realistic classifications. However, understanding the directives is a major challenge, and implementation of a similar system in Canada for consumer products would require substantial professional input, to the point of impracticality.

Additivity Formulas

If the components of a mixture behave additively, the LD_{50} or LC_{50} of the mixture can be calculated according to the following formulas:

a) for a solid or a liquid,

$$\frac{1}{LD_{50}\ of\ mixture} = \frac{proportion\ of\ ingredient\ A}{LD_{50}\ of\ ingredient\ A} + \frac{proportion\ of\ ingredient\ B}{LD_{50}\ of\ ingredient\ B} + \ldots + \frac{proportion\ of\ last\ ingredient}{LD_{50}\ of\ last\ ingredient}$$

b) for a gas, vapour, dust, mist or fume,

$$\frac{1}{LC_{50}\,of\ mixture} = \frac{proportion\ of\ ingredient\ A}{LC_{50}\,of\ ingredient\ A} + \frac{proportion\ of\ ingredient\ B}{LC_{50}\,of\ ingredient\ B} + \ldots + \frac{proportion\ of\ last\ ingredient}{LC_{50}\,of\ last\ ingredient}$$

(proportion = the weight of the ingredient divided by the weight of the mixture);

A perennial question is the extent to which there may be interaction (potentiation, synergism, antagonism, etc.) among the components of mixtures. There are many known examples of interactions, positive and negative, most of which involve drugs and pesticides, because these substances are developed for their pharmacological and toxicological properties and are better tested.[13] There have been few systematic studies of toxicological interactions among the chemicals commonly present in consumer products. One large study of interactions determined the oral LD_{50}'s of all possible combinations of 27 industrial chemicals, including carbon tetrachloride, ethanol, ethylene glycol and toluene. The ratios of measured to predicted LD_{50}'s (predicted using the additivity formula) were mostly very close to 1, with some random variation above and below.[14] Other studies have shown similar results. Thus the available information indicates that the acute toxicity of mixtures of such chemicals is reasonably well predicted by the additivity formulas.

Equivalent formulas have been adopted by regulatory agencies for calculating the occupational exposure limits of mixtures of hazardous substances in air. For example, the American Conference of Governmental Industrial Hygienists (ACGIH), which develops the Threshold Limit Values (TLVs), advises that "in the absence of information to the contrary, the effects of the different hazards should be considered as additive."

Recommendations - *Components of Unknown Toxicity*

That the LD_{50} or LC_{50} of components of unknown toxicity estimated using professional judgement be accepted when based on sound scientific and technical principles.

That where the LD_{50} or LC_{50} is unknown and cannot be estimated, the LD_{50} or LC_{50} of the untested component be equal to the LD_{50} or LC_{50} of the most toxic known component present at over 1% w/w.

Rationale - *Components of Unknown Toxicity*

The additivity formula can be adapted to situations where information about the

LD_{50} or LC_{50} of a component of a mixture is limited or not available. Some of these situations are the following:

1. LD_{50} or LC_{50} has been estimated in an alternative test, such as the Fixed Dose Method. The LD_{50} or LC_{50} is known to exceed one of the fixed doses. The calculation can be performed as an inequality.

   For example, component A (40%) has LD_{50} = 300 mg/kg and component B (60%) has LD_{50} > 2000 mg/kg.

$$\frac{1}{LD_{50}} = \frac{0.4}{300} + \frac{0.6}{(> 2000)}$$
$$= 0.00133 + (< 0.00035)$$
$$< 0.00168$$

$$LD_{50} > 595 \text{ mg/kg}$$

2. The LD_{50} or LC_{50} can be estimated by comparison to similar substances. By professional judgement it is often possible to estimate that the LD_{50} or LC_{50} exceeds a certain value. For example, if the known LC_{50}'s of several members of a family of solvents all exceed 6000 ppm, then one may judge that an untested member of the family with similar properties has an LC_{50} exceeding 6000 ppm. This value can be used in the formula as in the above example.

3. Testing shows that serious non-lethal effects occur at a significantly lower dose than the LD_{50}. By professional judgement, the lower dose could be substituted into the formula.

4. The LD_{50} or LC_{50} is unknown and cannot be estimated. Two alternatives to deal with this situation were considered:

   i) Whole Product Premise: In the *Controlled Products Regulations* (WHMIS), if no information is available about a component present at over 1%, then the LD_{50} or LC_{50} of the product is taken to be the LD_{50} or LC_{50} of the most toxic known component over 1%. This approach tends to over-classify the majority of mixtures in order to avoid the occasional under-classification.

   ii) Untested Component Premise: The recommended alternative is to assume that the LD_{50} or LC_{50} of the untested component is equal to the LD_{50} or LC_{50} of the most toxic component present in the mixture at a concentration of 1% or more. This avoids extreme over-classifications at the cost of more frequent under-classification.

   For example, a product consists of components A (10%, LD_{50} unknown), B

(10%, LD_{50} = 200 mg/kg) and water (80%). In WHMIS, the assumed LD_{50} of the product is 200 mg/kg, whereas in the recommended approach, the LD_{50} is calculated to be 1000 mg/kg.

It should rarely occur that the toxicity of a major component of a consumer product is completely unknown. Normally it is possible to use professional judgement and qualitative and quantitative structure-activity relations (SARs) to estimate the toxicity of a material, however approximately. Nevertheless, many dealers may lack the expertise, resources or confidence to make estimates.

Recommendation - *Calculating 4 hour LC_{50}'s*

That Haber's rule be specified as a means of converting LC_{50} data to the equivalent of a 4 hour exposure for the purposes of classification.

a) For a gas or vapour,

$$LC_{50} \text{ at } 4 \text{ hours} = LC_{50} \text{ at } Y \text{ hours} \times \frac{\sqrt{Y \text{ hours}}}{2}$$

b) For a dust, mist or fume,

$$LC_{50} \text{ at } 4 \text{ hours} = LC_{50} \text{ at } Y \text{ hours} \times \frac{Y \text{ hours}}{4}$$

(Y hours = the actual number of hours of exposure duration).

Rationale - *Calculating 4 hour LC_{50}'s*

The OECD test guideline for acute inhalation toxicity recommends an exposure duration of 4 hours (longer in special circumstances), and most national and international criteria systems are based on or moving towards 4-hour LC_{50}'s. Haber's Rule is a widely accepted "rule of thumb" for predicting the LC_{50} of a substance at different exposure times. In the *Controlled Products Regulations* (WHMIS) criteria, Haber's Rule is adopted as follows:

"an LC_{50} that is obtained in an animal assay at an exposure duration of other than four hours may be converted to an LC_{50} equivalent to an exposure duration of four hours by using the following formulas:

a) For a gas or vapour,

$$LC_{50} \text{ at } 4 \text{ hours} = LC_{50} \text{ at } Y \text{ hours} \times \frac{\sqrt{Y \text{ hours}}}{2}$$

b) For a dust, mist or fume,

$$LC_{50} \text{ at } 4 \text{ hours} = LC_{50} \text{ at } Y \text{ hours} \times \frac{Y \text{ hours}}{4}$$

(Y hours = the actual number of hours of exposure duration)."

The formulas can readily be applied by dealers to published data, since much published data gives the exposure time.

The major caution in employing Haber's Rule is to avoid data obtained using exposure times much less or much more than 4 hours. Generally exposures less than 1 hour or longer than about 10 hours may not provide reliable conversions. It is best to use 4-hour data from an OECD-standard test whenever available.

Recommendation - *Minimum Concentrations*

That the additivity formulas apply to substances present at 1% w/w or more.

Rationale - *Minimum Concentrations*

This recommendation applies when the additivity formulas are to be used; products which are known to be toxic through human experience, test results or professional judgement will require labelling as such, whatever the concentrations of the toxic components. A cut-off is needed when using the additivity formulas because many products contain large numbers of trace components which, while not significantly affecting the toxicity, would render use of the additivity formulas prohibitively complex. The specific cut-off value, 1% w/w, is the same as that specified in the *Controlled Products Regulations* (WHMIS).

Recommendation - *Minimum Amounts*

That if the total amount of a toxic substance (or substances) in a product is less than 1/20 the LD_{50} for a 10 kg child, the product is to be exempted from the criteria.

Rationale - *Minimum Amounts*

The recommendation recognizes the presence, in many products, of large numbers of trace components which are present in too small amounts to pose a hazard. In small containers, materials may be present at concentrations greater than 1% w/w, but in a total quantity far below the toxic dosage. The current *Consumer Chemicals and Containers Regulations* establish exemptions for products containing less than specified amounts of listed substances; for example, products containing less

than 5 mL of petroleum distillates are exempted.

The factor of 1/20 for the LD_{50} for a 10 kg child was chosen because:

- children are the vulnerable population;
- the choice of a child's weight will ensure that all adults are covered; and
- the factor of 20 provides a significant safety factor.

Recommendations - *Aspiration*

That a product be considered as posing an aspiration hazard, falling into the Toxic Sub-Category, Division 2, if it has a viscosity of 14 cSt or less at 40°C and if it contains at least 10% w/w of a substance posing an aspiration hazard.

That the aspiration hazard criteria not apply to products packaged in a spray or mist dispenser, but apply to stream dispensers.

That the list of substances to be classified as posing an aspiration hazard include: n-primary alcohols, C_3 - C_{13}; isobutyl alcohol; terpene alcohols; ketones, C_3 - C_{13}; hydrocarbons, C_3 - C_{13}.

Rationale - *Aspiration*

A review of the literature on chemical aspiration revealed that four principal families of chemicals have been shown to pose a significant aspiration risk: ketones, hydrocarbons (petroleum distillates and turpentine), primary alcohols and certain chlorinated hydrocarbons. There is human evidence mainly for petroleum products, turpentine, pine oil (a natural mixture of terpene alcohols and hydrocarbons) and carbon tetrachloride, as summarized in the table below.[15,16,17,18,19]

Both animal and human data show that the effective oral LD_{50} of these liquids, when aspirated, is often below 500 mg/kg.[15,16,17]

While viscosity, surface tension and water solubility are all important factors for assessing the aspiration hazard, the single most important physical property is the viscosity of the chemical or product. The other properties (water solubility and surface tension) seem to be modifying factors with less variability within these chemical families. Experimental studies by Gerarde and colleagues have shown that substances with viscosities below about 2 cSt are extremely hazardous. Substances with viscosities below 10 cSt are hazardous. Aspiration toxicity was observed for some substances with viscosities of 10 - 14 cSt. Substances with viscosities over 20 cSt, such as lubricating oils, were not hazardous by aspiration.[15,16,17]

Table 9: Substances That Pose an Aspiration Hazard

Substance	Evidence of Aspiration Hazard *	Viscosity (cSt)
Gasoline	H	<4
Kerosene	A,H	1.4
Petroleum solvents	A,H	<4
Lighter fluid	H	<4
Benzene	A,H	0.6
Xylene	H	0.6
Turpentine	A,H	1.2
Pine oil	H	<2
Carbon tetrachloride	H	0.7
Alkanes, alkenes	A	<2
Alkyl alcohols		
Ethyl alcohol	A	1.1
Butyl alcohol	A	2.2
Octyl alcohol	A	6.4
Dodecyl alcohol	A	12.1
Alkyl ketones	A	<2
Lubricating oil	N	28
Mineral oil	N	40

* A = positive evidence in animal tests; H = positive evidence from human case reports; N = negative evidence in animal tests

The current *Consumer Chemicals and Containers Regulations* require labelling for an aspiration hazard to appear on containers of products containing petroleum distillates and having viscosities below 13 cSt. The US Consumer Product Safety Commission has an equivalent provision.[20] There is little practical difference between using 13 cSt or 14 cSt as the limit for classification. The limit of 14 cSt was selected as recommended by Gerarde. The value of 40°C for determining viscosity is widely used in industry.

Viscosity is a necessary but not sufficient condition for a product to be an aspiration hazard. Water has a low viscosity (about 1 cSt) and can produce low-viscosity solutions or emulsions of many organic compounds by dilution. Many common organic compounds have viscosities below 10 cSt, but have not been tested for aspiration hazard. Examples include organic acids, amines, esters, and ethers. Many of these are likely to be aspiration hazards, but no firm conclusion

can be drawn without experimental evidence. The list of substances known to pose an aspiration hazard is therefore intended to be inclusive, not exclusive; dealers will be required to label products for an aspiration hazard if the hazard is present, whatever the formulation.

Recommendation - *Accessibility of Toxic Components*

That the accessibility of potentially toxic components be considered by the Legal Drafting Working Group, to ensure that the criteria apply only to components or generated products to which the user or others might become exposed in normal use or reasonably foreseeable misuse. Components which cannot be made accessible to the user or others, by virtue of the product form or formulation, should not be subject to the criteria.

Rationale - *Accessibility of Toxic Components*

The purpose of the review is to ensure that consumer chemical products which may harm the user or others are subject to regulatory requirements appropriate to the hazard. When it can be clearly shown for a specific product that the risk is negligible, there is no benefit in subjecting the product to regulatory requirements. In addition, subjecting the product to the labelling requirements appropriate to a product posing a significant risk degrades the effectiveness of precautionary labelling in general, as consumers would become accustomed to seeing precautionary labelling on products which are obviously not hazardous.

Recommendation - *Supernatants*

That the Legal Drafting Working Group be informed of need to ensure that the issue of supernatants (separable layers) is addressed during drafting.

Rationale - *Supernatants*

Components of consumer chemical products may separate out over time, especially in the case of emulsions of petroleum distillates. Estimation of the toxicity of the product as a whole in such cases may significantly misrepresent the hazard when the upper supernatant layer will be accessible as a distinct mixture or solution and may be so ingested by a child.

Recommendation - *Mixing*

That the principle of dealer responsibility given in the draft preamble, presented below, be incorporated in the revised *Consumer Chemicals and Containers Regulations*, subject to elaboration and re-wording as appropriate. Both packaging and labelling should be considered as subject to the statement of principle.

PREAMBLE

These hazard criteria are intended to provide consistent guidance to government and industry as warning labels for chemically based consumer products to ensure that they are used appropriately. The following principles apply to their interpretation and use:

1) Our intent is to adequately warn consumers about real hazards and special risks (i.e. children, etc.).

2) We must consider normal use and reasonably expected misuse in developing warning labels; thus child ingestion or typical consumer mixing (an acid toilet bowl cleaner with a bleach) must be taken into account.

3) The expected route of exposure (ingestion, dermal, inhalation) is key to appropriate risk assessment and use of these guidelines. Product composition must be evaluated in the context of exposure to develop the correct labelling.

4) No set of rules can cover every situation. As industry, we are responsible to assess the risks of new products and formulations. A hazardous product should be appropriately labelled, whether the guidelines call for one or not. As government, we must be open to consider scientific judgement, test data and real world (i.e. poison control centre data, etc.) experience as good input to modify labelling requirements.

Rationale - *Mixing*

Some consumer products may generate toxic materials during use or misuse. If the generated toxic material is not a component of the product at the time of sale then the criteria do not apply. For example, bleaches containing significant levels of accessible chlorine generate toxic gases when mixed with acids or bases such as toilet bowl cleaners; the Product Safety Bureau has records of two deaths from this cause. The toxic gases are not components of the bleaches, but are the result of a chemical reaction between the bleach and acid or base.

The current *Consumer Chemicals and Containers Regulations* require containers of some bleaches to bear precautionary statements relating to the hazard posed by mixing. It is, however, difficult to anticipate all of the future situations and product combinations in which a hazard due to mixing may arise and for which precautionary labelling would be appropriate. Therefore, a general statement of principle was chosen to establish dealer responsibility for ensuring that such hazards are dealt with by precautionary labelling as appropriate.

A wording has been formulated for chlorine-containing bleaches, but will not be "tied" to a specific criteria.

Recommendation - *Substances of Special Concern*

That substances which cause non-lethal serious effects be included in a list for purposes of classification. The list is to be illustrative and inclusive, not exclusive, and is to include the serious effects which would render a substance as a candidate for the list. The effects are to include: depressed level of consciousness, seizures, muscular weakness or paralysis, acute renal failure, arrythmia, hypotension, dyspnea, respiratory depression, pulmonary edema, optic neuritis, methaemoglobinuria and euphoria. Substances recommended for inclusion are given below:

Table 10: Classification of Substances of Special Concern

Substance	Classification	Minimum Concentration
1,2-dichloroethane (ethylene dichloride)	Division 2, "Toxic"	solution ≥ 10% w/w
	Division 3, "Harmful"	5% ≤ solution < 10% w/w
diethylene glycol	Division 3, "Harmful"	solution ≥ 5% w/w
ethyl acetate	Division 3, "Harmful"	solution ≥ 5% w/w
ethylene glycol	Division 2, "Toxic"	solution ≥ 5% w/w
	Division 3, "Harmful"	5% > solution ≥ 2% w/w
methyl alcohol (methanol)	Division 2, "Toxic"	solution ≥ 1% w/w
1,1,1-trichloroethane	Division 3, "Harmful"	solution ≥ 5% w/w

Rationale - *Substances of Special Concern*

Certain chemicals are known to be more hazardous to humans than indicated by the results of animal tests. Other chemicals can cause serious and irreversible non-lethal toxic effects at doses significantly below the LD_{50} or LC_{50}.

There are a number of possible reasons why standard animal tests may not reflect the actual hazards of certain substances to humans:

1. the toxic effect is not measured in standard tests (for example, aspiration of petroleum distillates);

2. humans metabolize certain chemicals differently than rodents (for example, ethylene glycol);

3. the effect is serious and irreversible, but non-lethal (for example, methanol); or

4. patterns of use and exposure may result in significant numbers of severe exposures (for example, ethylene glycol or 1,1,1-trichloroethane).

This recommended approach permits specific concerns to be identified as in the regulations while maintaining parallels to the criteria.

Specific Substances

1,2-DICHLOROETHANE

Death has resulted from the ingestion of 15 mL by a 14 year-old boy, secondary to hepato-renal failure. Fatalities in adults have been reported after ingestion of 30 to 70 g. Death is usually due to circulatory or respiratory collapse.

1,2-Dichloroethane is a central nervous system depressant that produces symptoms ranging from nausea, vomiting, headache, lightheadedness and weakness to stupor, disequilibrium, coma and respiratory arrest. Typically, in severe cases, central nervous system signs first appear within several hours of exposure and are followed by a quiescent period. On the second day, oliguria and hepatic transaminasemia may develop. Subsequently, over the next several days, hepatorenal failure can occur. Excess ingestion produces widespread organ damage (especially kidney, liver and adrenal gland) as well as gastrointestinal bleeding. Hepatic and renal dysfunction has been reported as being complicated by fatal massive mid-zonal hepatic necrosis, acute renal tubular necrosis, hypolycemia, hypercalcemia, hypoprothombinemia, reduced clotting factors, adrenal necrosis, and gastrointestinal hemorrhage.[21,22,23,24]

DIETHYLENE GLYCOL

The estimated acute oral lethal dose for humans is about 1 mL/kg. However, doses reported as fatal are highly variable, ranging from 5 to 120 mL in children and 20 to 240 mL in adults.

Diethylene glycol causes central nervous depression and hydropic degenerative lesions in the liver and kidneys. This latter renal effect occurs probably with no significant deposition of oxalate but leads to anuria which may prove fatal within days.[19,22,23]

ETHYL ACETATE

Ethyl acetate is a mild local irritant as well as a central nervous system depressant. On a molar basis, the simple esters of ethyl alcohol, a class which includes ethyl acetate, are more toxic than ethanol by 4 to 10 fold. The ratio of the narcotic dose to the lethal dose is about 1 for ethyl acetate and 2 for alcohol. The estim-

ated lethal dose varies between 0.5 g/kg and 50 g/kg.[19,22]

ETHYLENE GLYCOL

Ethylene glycol is a well known nephrotoxicant. Its metabolites in humans, glycolic acid and oxalic acid, produce metabolic acidoses. In addition, oxalic acid combines with renal calcium, causing kidney degeneration. Death has been reported from drinking as little as 30 or 60 mL, although, in rare cases, people have survived ingestion of more than 2000 mL.

Overall, the blood concentration of ethylene glycol is the known useful indicator for the evaluation of its potential toxic action. Ethylene glycol levels greater than 50 mg/dL (8.06 mmoles/L) are frequently associated with intoxication. As a rough estimate, ingestion of 3 mL of 100% ethylene glycol by a child weighing 10 kg (assuming a volume distribution of 0.65 L/kg) would produce a potential maximum peak plasma level of 46 mg/dL. In the same child, an average swallow (2 to 8 mL) would produce a potential maximum peak level of 31 to 123 mg/L.[22,23]

METHYL ALCOHOL

The principle toxic effect of methyl alcohol is blindness. The effect is produced by formic acid, its end metabolite. A fatal outcome or the occurrence of ocular sequelae both appear to be related to the time between ingestion and initiation of treatment. Blindness has reportedly followed ingestion of about 4 mL of absolute methanol whereas 6 to 150 mL may be fatal.

Like ethylene glycol, the blood concentration of methyl alcohol is the best indicator of the severity of intoxication. As a rough estimate, ingestion of 1.5 mL of 100% methanol in a child weighing 10 kg (assuming a volume of distribution of 0.65 L/kg) would produce a potential maximum peak plasma level of 23 mg/dL, a level at which ethanol treatment would be considered.[22,23]

1,1,1-TRICHLOROETHANE

Like many halogenated hydrocarbons, 1,1,1-trichloroethane sensitizes the heart to epinephrine thereby increasing the risk of cardio-vascular effects. This substance is well absorbed by the lung and produces central nervous system depression until coma and/or anesthia. Acute lethal doses are estimated at 500 to 5000 mg/kg. Autopsy may reveal a fatty liver with necrosis. In accidental exposures to 1,1,1-trichloroethane lasting five minutes or less, the highest ambient air concentration that would not cause irreversible damage or enough incapacitation to prevent escape is 2500 ppm. Human subjects exposed to 900 - 1000 ppm for 20 minutes experienced light-headedness, incoordination and impaired equilibrium; transient eye irritation has also been reported at similar ambient air concentrations.[19, 22,23,245]

2. Chronic/SubChronic Toxicity

Recommendation

That a Working Group or some other group be established to continue work on chronic/subchronic toxicity criteria in such a manner that work on other aspects of the review is not slowed. This may mean continuing the work outside of the framework of the current review.

Rationale

Chronic/subchronic toxicity was considered at length. In addition, a contractor (CCOHS, 1993) was engaged to establish a rationale for the presence or absence of subchronic and chronic exposure-related criteria. A major concern was that genuine, rather than theoretical, hazards be addressed.

The contractor concluded that product usage patterns in some product areas posed a potential for chronic or subchronic exposures. The product areas were arts and crafts materials, home repair, maintenance and renovation and automotive and boat repair and maintenance.[25]

It was concluded, on examining the contractor's report, that the case was strongest for arts and crafts materials, less so for the other product areas. Further action may be appropriate for arts and crafts materials, but would require the establishment of a technical Working Group of substantially different composition would be required, to ensure representation of the sectors most concerned with the arts and crafts materials and chronic/subchronic toxicity and with the expertise required to develop criteria.

3. Flammable Products

i) Hazard Categories and Sub-Categories

Recommendation

That the *Consumer Chemicals and Containers Regulations* be revised to establish hazard categories for flammable and spontaneously combustible consumer products.

Recommendation

That the flammability hazard category be divided into three sub-categories - Extremely Flammable, Flammable and Combustible.

Recommendation

That the *Consumer Chemicals and Containers Regulations* be revised to require that Extremely Flammable products only be sold with the express prior permission of Health Canada. Permission should only be given when the products can be shown to provide benefits that outweigh the high degree of hazard, and when no other less hazardous alternatives are readily available. Health Canada would be free to refuse or to make the permission subject to restrictions on the packaging, labelling or conditions of sale.

Rationale

The current *Consumer Chemicals and Containers Regulations* define three levels of hazard for flammable products, with signal words DANGER, WARNING or CAUTION. There are reduced requirements for some combustible products (no requirement for a hazard glyph, signal word or primary hazard statement). However, the difference between the levels are not understood by consumers, as shown by a survey[1], and have little impact upon consumer behaviour. In practical terms, the precautions for differing degrees of flammability are the same for the consumer: one does not smoke or place ignition sources near any substance which poses a flammability hazard. The average householder does not have in place the engineering controls necessary to react to a multi-tiered system. A single sub-category was therefore deemed appropriate for the range of flash points currently subject to requirements for a glyph and signal word.

The extremely flammable sub-category is intended to deal with those products which may prove to be too hazardous for household use without specialized training and equipment. However, there are various exposure factors to consider: the solvent rate of release; the intended use of the product; whether the product is intended or likely to be spread out over a large area; and whether there are safe alternatives to the product. These products should therefore be considered on a case-by-case basis.

Combustible products do not ignite readily but may add to the fire load, and should therefore not be stored in areas prone to fires (such as in furnace or electrical rooms). The fire services are very concerned about combustible material, and that householders should be informed that combustible products must be stored appropriately. The current *Consumer Chemicals and Containers Regulations* require that products which contain hazardous substances and which have flash points between 20°C and 65°C bear the precautionary statement "Keep away from open flame or spark." but not the flammability hazard symbol.

Spontaneous ignition is a complex phenomenon involving the ignition of combustible material through the heat of a reaction, without external heat or other source

of ignition. One of the best known examples of spontaneous ignition is that of a drying oil, such as linseed oil, absorbed on cotton waste, such as a rag. When linseed oil slowly takes oxygen from the air to form a skin of solid material, the oxidation reaction produces heat. If linseed oil is spread on a solid surface, such as wood, the heat of oxidation is dissipated quickly. However, if the same amount of oil is absorbed in a cotton rag, the heat cannot escape as rapidly, and the temperature of the rag increases. This, in turn, accelerates the rate of oxygen absorbtion and results in a further temperature increase. If the process continues, the temperature of the oil-soaked rag may gradually rise until ignition occurs spontaneously.

Many consumer chemicals (liquid or paste) are intended to be used with a cotton rag for either cleaning, rubbing or polishing purposes. A used rag that is not washed right away or not disposed of properly may be an ideal candidate for a fire caused by spontaneous ignition.

The Montreal Urban Community Fire Department indicated that spontaneous ignition is quite rare, about 1% of all fires. But, in nearly every case of spontaneous ignition where a residence was involved, an oil-soaked rag left on a countertop or in the garbage-can was the ignition source. The British Columbia Office of the Fire Commissioner estimates that approximately 48 incidents occur each year in that province from linseed-oil soaked cloths being discarded incorrectly. In 1992, sixty-six fires in British Columbia were attributed to spontaneous ignition.[27]

ii) ***Criteria***

Recommendation - *Criteria - Flammable*

That the criteria to define a product as flammable be as follows:

Table 11: Flammability Criteria

State	Classification	Criteria
Liquid	Extremely Flammable	flash point < -18°C
	Flammable	-18 ≤ flash point ≤ 37.8°C (100°F)
	Combustible	37.8 < flash point < 60.0°C
Gas	Flammable	forms a flammable mixture with air at ≤ 13% v/v or over a concentration range ≥ 12% v/v, at normal atmospheric pressure

State	Classification	Criteria
Solid *	Extremely Flammable	flash point < -18°C
	Flammable	-18 ≤ flash point ≤ 37.8°C (100°F)
	Combustible	37.8 < flash point < 60.0°C
Pressurized Containers, Pump-Spray Containers	Extremely Flammable	flame projection ≥ 100 cm
	Flammable	15 ≤ flame projection < 100 cm

* "Solid" means a substance that is not pourable at 21°C, such as a powder or a product that must be trowelled.

Rationale

Flammable Liquids

The recommended upper criterion of 37.8°C (100°F) is the same as the "flammable" limit in the *Controlled Products Regulations*, and is also harmonized with the U.S. and the European Community criteria. The upper flash point criterion of 61°C in the *Transportation of Dangerous Goods Regulations* was considered and rejected. This is a temperature which can occur in transport situations but is unlikely to occur in normal domestic situations.

Table 12: Flammable Liquid Fire Statistics

Province	Flammable Liquid (Total)	Flammable Liquid (Without a Symbol)	
Quebec 1987 to 1991	fires - 93 damages - $2,633,499 deaths - 1 injuries - 21	fires - 30 damages - $990,193 deaths - 1 injuries - 9	32% 38% 100% 43%
British Columbia 1987 to 1991	fires - 131 damages - $3,589,578 deaths - 2 injuries - 50	fires - 34 damages - $234,828 deaths - 0 injuries - 1	26% 7% 0% 3%
New Brunswick 1988 to 1991	fires - 301 damages - $1,215,647 deaths - not available injuries - not available	fires - 51 damages - $449,248	17% 37%

Canadian fire statistics were consulted to determine the need for a hazard glyph for products with flash points between 20 and 37.8°C. Three Provinces in Canada have a system with the accuracy that is required to obtain information of some

value. The fire services define "flammable" liquids as those with a flash point of less than 37.8°C. A comparison was made of the number of fires with "flammable" liquids that require a hazard glyph under the present Regulations to those that do not. Data was requested for accidental fires (not arson) due to misuse or careless use of material in residential sites where the material first ignited was a flammable or combustible liquid. The following categories were not included: cooking oil, butter, fat, lard, products where the flash point was not identified, such as "paint and varnish" (flash point is too widely spread), and the "unclassified" category.

Extremely Flammable Liquids

The current *Hazardous Products Act* prohibits the sale, importation or distribution of liquid coating materials and paint and varnish removers for household use having a flash point of less than 0°F or approximately -18°C (*Hazardous Products Act*, Schedule I, Part I, Item 3). The recommended criteria would broaden the range of products subject to a restriction on sale due to extreme flammability, without prohibiting the sale of such products.

Flammable Gases

Examples of substances classified under the recommended criteria are given below:

Table 13: Example Classification of Gases

Substance	Property*	Classification
propane	lel - 2.3%; uel - 9.5%	flammable
butane	lel - 1.9%; uel - 8.5%	flammable
acetylene	lel - 2.5%; uel - 82.0%	flammable
oxygen	not available**	not flammable

* "lel" means "lower explosive limit; "uel" means "upper explosive limit"

** Oxygen suppliers do not ship oxygen under the "flammable" classification of WHMIS nor of TDG; it is viewed as non-flammable

The consumer chemical products market includes a variety of goods powered or fuelled by compressed gas cylinders, such as barbecues and curling irons. The current *Consumer Chemicals and Containers Regulations* do not address the hazard posed by flammable gases.

The recommended criteria are the same as those established in the *Controlled Products Regulations* (WHMIS). The upper and lower flammability range are required information on MSDS's and should be readily available to all dealers. The Compressed Gas Association was consulted and agrees with the criteria.

Flammable Solids

A truly flammable solid is rarely encountered in the consumer realm. Most solids "burn" through the evolution of vapours emanating from the heated solid matter. It is the vapours which ignite and burn; not the solid matter itself.

Many of the guidelines under the European Community, the *Controlled Products Regulations* (WHMIS) and the *Transport of Dangerous Goods Regulations* are vague and subject to interpretation. The *Controlled Products Regulations* state that a solid substance is flammable when it "can be ignited readily and when ignited burns so vigorously and persistently as to create a hazard". This leaves much to the discretion of the tester, causing too much variability within products. Consumer products would suffer from uneven labelling under such criteria.

Combustible Products

The recommended upper flash point criterion for combustible product harmonizes with the equivalent limit referenced in the *Transport of Dangerous Goods (TDG) Regulations*. (The current TDG requirements establish upper criteria of 60.5°C and 61.0°C, not 60.0°C, for TDG Class 3, international air or marine shipment, but it is anticipated that Canadian TDG requirements will adopt 60.0°C in future.) The "combustible" classification in the *Controlled Products Regulations* (WHMIS), with flash points between 37.8 and 93.3°C, is inappropriate for household use. Temperatures of 93.3°C, while being encountered in industrial settings, would rarely be met in the consumer realm. Consumers should have some indication that a product may flash at normal working and living temperatures, with 60.0°C being considered at the outside range of "normal" in Canada; a limit of 60.0°C provides a warning while not diluting the danger.

The current *Consumer Chemicals and Containers Regulations* require that products containing specific hazardous substances and which have flash points between 20 and 65°C bear the precautionary statement "Keep away from open flame or spark.", but not the flammability hazard symbol.

Pressurized Containers

The large majority of products currently on the market have flame projections of less than 85 cm, with 25 - 30% having flame projections greater than 45 cm. The absence of reported accidents, injuries or deaths due to ignition and flame projection involving these very widely used products indicates that they do not pose a major risk.

Pressurized containers with flame extensions of 100 cm or more pose an obvious and inherent hazard, not just of accidental ignition but also of encouraging fire play

by children. Specific products in future may, however, require a product/propellant stream extension greater than 100 cm to function. The intent of the recommendation for a 100 cm criterion for extremely flammable pressurized containers is that the onus be on the dealer to show that the product could not readily be modified to reduce the flame projection, and that the product fulfilled a consumer need not readily satisfied by alternative products or means. Health Canada would be free to refuse permission or to require specific measures to be taken regarding labelling, packaging or manner of sale (such as limiting the distribution of the product to certain outlets).

Recommendation - *Water-Based Combustible Products*

That products with flash points in the "combustible" range (37.8 to 60.0°C), with compositions of 50% w/w or more water and with 50% w/w or less water-miscible solvent, not be considered "combustible". Products with solvents which are not water-miscible, or with more than 50% solvent (water miscible or non-water miscible), are to be considered "combustible" if the flash points so warrant.

Rationale - *Water-Based Combustible Products*

There are products with "combustible" flash points which are water-based and which would not support combustion after the initial surface flash. Many dish-washing liquids, for example, contain a moderate amount of low molecular weight alcohols and will flash between 37.8 and 60°C but will not continue to burn. The intent of the recommendation for a Combustible Hazard Category was fire load rather than ease of ignition. The *Transport of Dangerous Goods Regulations* exempt from the Combustible category products which are solutions of 50% or less water-miscible alcohols in water.

Recommendation - *Pump Sprays*

That non-refillable pump-spray containers be subject to the flame-projection criteria, and that refillable pump-spray containers to be subject to either the flame-projection or flash point criteria, with the criteria under which the product has the higher level of hazard to apply.

Rationale - *Pump Sprays*

A manual pump spray can significantly increase the flammability of a substance by producing a mixture of the substance with air that is much more flammable than the substance alone. For example, a ski care product, packaged in a manual, pump spray, was tested by the Scientific and Laboratory Services Division of the Product Safety Branch in 1990. This product had a flash point of more than 65.5°C, but the flame projection, tested using the method from Schedule III of the *Consumer*

Chemicals and Containers Regulations, modified to examine a manual, pump spray, was between 15 and 45 cm.

Refillable containers intended for use with specific contents should be dealt with on the basis of those contents, even if sold empty to be filled by the user. Some refillable pump sprays may not project far but may have flammable contents and would fall within the flash point, rather than a flame-projection, criteria. The test method and criteria should reflect the hazard - flash point for ordinary containers, flame-projection for pump-sprays. For refillable pump-spray containers, both flash point and flame-projection would be examined and the highest level of hazard found would apply. For non-refillable pump-spray containers, only the flame-projection criteria would apply.

Recommendation - *Spontaneously Combustible Products*

That any consumer product that is spontaneously combustible and liable to spontaneous heating under normal conditions of use, or liable to heat in contact with air to the point where it begins to burn, be considered as posing a spontaneous combustion hazard. These would include products found by ASTM D 3523 - 76 (re-approved 1980) "Standard Test Method for Spontaneous Heating Values of Liquids and Solids (Differential Mackey Test)" to pose a spontaneous combustion hazard.

Rationale - *Spontaneously Combustible Products*

Given above under Hazard Categories and Sub-categories.

iii) *Test Methods*

Recommendation - *Liquids*

That the test method for flammable liquids be as follows:

1. for liquids having a viscosity of less than 5.8 mm^2/s (45 Saybolt Universal Seconds) at 37.8°C (100°F):
   a) the Standard Test Method for flash point by Tag Closed Tester ASTM D 56-82 dated August 27, 1982; or
   b) the appropriate test in the Standard Test Methods for flash point by Setaflash Closed Tester ASTM D 3828-81 dated August 28, 1981; and

2. for liquids having a viscosity of 5.8 mm^2/s or more at 37.8°C, the appropriate test in the Standard Test Methods for flash point by Pensky-Martens Closed Tester ASTM D 93-80, dated August 29, 1980.

Rationale - *Liquids*

The recommended test method is defined in the *Controlled Products Regulations* (WHMIS). This method uses a Tag Closed Tester for lower viscosity liquids and a Pensky-Martens Closed Tester for liquids of 6 cSt (45 Saybolt Universal Seconds) or more at 37.8°C. Very thick substances will, by their nature, inhibit free solvent evaporation and the stirring capabilities of the Pensky-Martens apparatus will alleviate this restriction.

Recommendation - *Solids*

That the test method for flammable solids be as follows:

Place a 15 gram sample of the solid test product, in the form the consumer will use it, in the cup of the Closed Cup flash point apparatus. Test as for liquids.

The recommendation is conditional upon the method being thoroughly validated.

Rationale - *Solids*

Different methods were considered. The U.N. method outlined under the *Transportation of Dangerous Goods Regulations* is simple and versatile, without the vagueness of other methods. The U.N. method 14.2.2.3 involves attempting to ignite a rope or triangular pile of the substance. If the substance ignites within 2 minutes, (5 minutes for metal powders) and burns at a rate of 2.2 mm/s after the initial 80 mm, then it is deemed a flammable solid. There is concern that this method may prove unworkable for those products which cannot be formed into the trough-like apparatus necessary for the determination. An examination of the test method U.N. 14.2.2.5.1 shows that the substance can be tested "in its commercial form" in an "unbroken strip". More solid forms can be cut and arranged so that this criteria can be met. The U.N. method, however, does not address the usual mechanism of consumer product burning; that is, vapour generation and the ignition of said vapour.

The ASTM test method D 2863-77 measures the oxygen demand and requires oxygen tanks, nitrogen tanks and other equipment which would be non-standard in many facilities. It is considerably more complicated than the U.N. method. Manufacturers would have to purchase new equipment and perform unfamiliar tests in order to classify their products, contravening the goal to use information and equipment already present in most companies.

In order to accommodate these deficiencies, a variation of the "flammable liquid" method is recommended. The same criterion for flammability (37.8°C) is also recommended. The method was evaluated using three common household

consumer solids. The results are presented in the following table. This limited test indicates that the method would indeed classify products which are flammable to the public and those which are not. A more detailed verification is required for this test method and the recommendation is therefore conditional upon the method being thoroughly validated.

Table 14: Example Classification of Flammable Solids

Substance	Temperature (°C)	Observation	Classification
10.0 g paraffin wax	35 40 50 105	solid, no flash semi-solid, no flash liquid, no flash liquid, no flash	not flammable
10.0 g blue "Crayola" crayon	37 55 60 105	solid, no flash solid, no flash liquid, no flash liquid, no flash	not flammable
13 g solid barbecue fire-starter (Reckitt and Coleman)	25 (product was broken up as instructed)	solid, flash	flammable

Recommendation - *Pressurized Containers*

That the test methods for determining pressurized container flame projection be as follows:

1. for containers designed to release their contents in the horizontal plane, the method described in Schedule III of the current *Consumer Chemicals and Containers Regulations*;

2. for pressurized containers not designed to release their contents in the horizontal plane, place a flame 15 cm over the nozzle of the container in an upright position and measure the height of the flame produced when the valve is released.

The recommendation is conditional upon the method being thoroughly validated.

Rationale - *Pressurized Containers*

The flame projection test in the current *Consumer Chemicals and Containers Regulations* is valid for typical pressurized containers used in a nozzle-up position to expel a product/propellant stream horizontally. However, some types of products, such as insulating mousse or caulking, have a spout which does not release the

contents in the horizontal plane and they therefore cannot be evaluated with the current method. Release of the valve when the container is in the upright position will leave the product at the bottom of the container and cause pure propane/ butane propellent to be released. As consumers may very rarely encounter a situation where pure highly flammable hydrocarbon gas is expelled from a container, these pressurized containers can represent a greater flammability hazard than other pressurized containers.

A modified testing procedure is therefore recommended for pressurized containers which do not release the contents in the horizontal plane. The procedure tests the container in an upright position, not the normal usage position, and measures the length, if any, of the flame produced in the vertical path. The recommendation is conditional upon the method being thoroughly validated.

Recommendation - *Pump Sprays*

That the test method detailed in Schedule III of the *Consumer Chemicals and Containers Regulations*, be used, modified as appropriate, to test manual pump sprays for flame projection. The recommendation is conditional upon the test method being thoroughly validated.

Rationale - *Pump Sprays*

The recommended test method requires validation.

Recommendation - *Spontaneous Combustion*

That ASTM D 3523 - 76 (re-approved 1980) "Standard Test Method for Spontaneous Heating Values of Liquids and Solids (Differential Mackey Test)" be used to determine if a product poses a spontaneous combustion hazard.

Rationale - *Spontaneous Combustion*

The test method ASTM D 3523-76 (re-approved 1980), used to assess the degree of self-heating of liquids and solids on cellulosic surfaces, is a simple technique and was verified by the Scientific and Laboratory Services Division of the Product Safety Bureau. More information on this test method and the phenomenon of spontaneous combustion is given the reference: "Spontaneous Ignition", Tsuchiya Y. and Sumi, K., Canadian Building Digest, September 1977, CBD 189.

4. Pressurized Containers

Recommendation - *Hazard Category*

That the *Consumer Chemicals and Containers Regulations* be revised to establish a hazard category for pressurized containers of consumer products.

Rationale - *Hazard Category*

The current *Consumer Chemicals and Containers Regulations* regulate some types of pressurized containers, defined by item 10 in Part II of Schedule I, which reads:

> "10. Disposable metal containers of consumer products designed to release pressurized contents by the use of a manually operated valve which forms an integral part of the container"

The presence of an internal pressure at or above the recommended criteria is an obvious hazard, although the exposure and thus the risk varies with container type and the intended use of the product. For typical hand-held consumer pressurized containers, the risk is reduced by the requirements of the *Transportation of Dangerous Goods Regulations*, which require the testing of pressurized containers in a water bath at 50°C to ensure container integrity during shipment. This requirement does not eliminate the hazard but does greatly lower the risk. In addition, the risk of an explosion-type failure of a conventional metal consumer-use pressurized container (aerosol can) is reduced because these products are fabricated to fail along a seam, minimizing the likelihood of fragments flying through the air on container failure.

The level of risk was judged to not warrant a requirement for a hazard glyph. Although the intention of the review of the *Consumer Chemicals and Containers Regulations* is to develop hazard-based criteria, risk may be considered when feasible. Some labelling is also required to alert users to the consequences of placing the used container in a fire or trash compactor, and workers involved in trash disposal may require some means of identifying pressurized containers.

The nature of the pressurized container market and industry has changed since this item was formulated in 1972. Refillable and non-metallic pressurized containers are now marketed, and numerous consumer products are used with separately sold pressurized containers which release the contents through the operation of a valve in the product rather than on the pressurized container itself (butane-fuelled hair curlers, for example). The hazard posed by these products are the same as that of the conventional disposable aerosol dispenser: rupture of the container and violent release of the contents when punctured or if heated, especially if placed in a fire or trash compactor. The recommended hazard category will include those products

that pose a hazard, whatever the means of construction.

Recommendation - *Criteria*

That the following criteria define pressurized containers:

1. the absolute pressure in the container is greater than 275 ± 1 kPa at 21.1°C or 717 ± 2 kPa at 54.4°C; or

2. in a liquid state, the absolute vapour pressure exceeds 275 kPa at 37.8°C as determined by ASTM D323-82 "Standard Test Method for Vapour Pressure of Petroleum Products (Reid Method)".

The recommendation is conditional, based on the understanding that conventional pressurized containers for consumer use currently on the consumer market have internal pressures greater than those specified in the proposed criteria.

Rationale - *Criteria*

The criteria are the same as that adopted in Subsection 3.10 of the *Transportation of Dangerous Goods Regulations* and paragraphs 34(c) and (d) of the *Controlled Products Regulations* (WHMIS). These Regulations also establish criteria for the critical temperature and absolute vapour pressure and 50°C, but these criteria are risk assessments more than hazard criteria and were therefore not recommended.

Recommendation - *Containers Filled by the User*

That the criteria apply to products designed for and intended to be used as pressurized containers, including those sold empty to be filled and pressurized by the user.

Rationale - *Containers Filled by the User*

The hazard posed by pressurized containers sold empty and pressurized by the user is the same as for containers sold pressurized.

Recommendation - *Exemptions*

That products subject to regulation under other legislation (except the *Transport of Dangerous Goods Regulations*) are to be exempted from inclusion within the category. These would include, but not be limited to, lighters, fire extinguishers and barbecue cylinders over 20 lbs.

Rationale - *Exemptions*

Many consumer products with pressurized contents are subject to product-specific regulations and standards. For example, lighters are required to conform to the *Hazardous Products (Lighters) Regulations*. Regulating such products under the *Consumer Chemicals and Containers Regulations* would impose an added regulatory burden with no increase in safety. Products subject to the *Transportation of Dangerous Goods Act, 1992 (TDG) and Regulations* are not included in the recommended exemption because the TDG deals with shipment of the containers, not the safety of end users, and does not require any hazard-specific labelling to appear on the immediate container.

5. Adhesives That Quickly Bond Skin

Recommendation - *Hazard Category*

That the *Consumer Chemicals and Containers Regulations* be revised to establish a hazard categories for cyano acrylic ester adhesives and other quick-bonding adhesives with similar characteristics with regard to skin bonding.

Rationale - *Hazard Category*

Instant or near instant skin bonding is a hazard posed by specific adhesives. At present, alkyl cyanoacrylate adhesives are the only type that exist in single component form and which therefore pose a hazard. Two component adhesives do not pose such a hazard because the mixing required to activate the adhesive is a deliberate act involving cognition; it is unlikely that a young child would access the two components and mix them prior to being exposed. Cyanoacrylate adhesives set in the presence of weak bases such as water. Moisture is always present in the skin, and cyanoacrylate adhesives therefore tend to set instantly on the skin. Alkyl cyanoacrylates are monomers with relatively low viscosities and are likely to flow readily from a container and run down the skin or into the eyes, making it easy for children to access the contents of a container and increasing the likelihood of ocular or dermal exposure.[28,29]

It is easier to break the bonds formed between the polymers soon after setting has begun, rather than later. Tissue damage will often result if an attempt is made to force apart the bonded tissues. The ease of removal and breakage of skin bonds depends upon the exact chemical composition of the adhesive, the age of the bond and the solvent used. Acetone is frequently used. Other solvents are available but are themselves irritating or toxic.

The current *Consumer Chemicals and Containers Regulations* establish require-

ments for:

> "Alkyl cyanoacrylate adhesives, where such products are packaged as consumer products."

Statistics from the Centre anti-poison du Québec showed alkyl cyanoacrylate adhesives were involved in 549 cases in the area covered by the Centre from 1989 to the present; 68 involved children 5 years or younger, and 65% of all cases required the use of a medical facility. The available statistics show an absence of major outcomes, because when prompt medical treatment is given, a major outcome may be averted (and therefore not recorded as such).

The pace of change in the consumer chemical market makes it likely that new types of fast bonding adhesives will appear in the future. The recommended wording for the category is intentionally open, to encompass future products which may pose a similar hazard.

Since there is currently no physical test to quantitatively characterize adhesives that quickly bond the skin, no attempt was made to establish a criteria which might lead to animal testing. Some phenolic impregnated plastics display an almost analogous behaviour to skin in terms of cyanoacrylate bonding, but no test based on these materials is currently available. If in future a test is deemed necessary, it may be possible to develop one using such materials.

6. Corrosive Products

Recommendation - *Hazard Category*

That the *Consumer Chemicals and Containers Regulations* be revised to establish a hazard categories for corrosive consumer chemical products,.

Further work on criteria to define corrosive products, for requirements other than those relating to child-resistant containers, was underway at the time of writing.

7. Irritant Products

Recommendation - *Hazard Category*

That the *Consumer Chemicals and Containers Regulations* be revised to establish a hazard categories for irritant consumer chemical products.

Further work on criteria to define irritant products was underway at the time of

writing.

8. Child-Resistant Containers

General

There is not a great deal of data available on which to assess the effectiveness of child-resistant containers used with consumer chemical products. However, the U.S. Consumer Product Safety Commission has estimated that the incidence of ingestion of U.S. regulated products by children under 5 years of age which prompted emergency room visits decreased from 48,000 in 1974 to 34,000 in 1981. During the same period, emergency room visits prompted by the ingestion of unregulated products increased slightly over the same period. A similar experience has been found with aspirin. Data from a U.S. poison control centre indicates that the portion of aspirin ingestion by children fell from 30% to 15% of the total reported cases.[30] In the U.K. a similar trend was observed.[31] A 1992 U.S. Consumer Product Safety Commission study found that child-resistant container requirements for aspirin reduced the aspirin-related child death rate by about 0.60 - 0.88 deaths per million.[32] Therefore, requirements for child-resistant containers for products that pose a potential danger to children do appear to reduce, but not eliminate, the incidence of injury.

i) Toxic Products

Recommendations

That products classified under Division 1 - "Extremely Toxic", via oral, dermal and inhalation routes, be packaged in child-resistant containers, when permission for sale is granted.

That products classified under Division 2 - "Toxic", via oral, dermal and aspiration routes, be packaged in child-resistant containers, except when packaged in metered containers and spray or mist dispensers.

Rationale - *Toxic Products*

The recommendations for child-resistant container requirements for toxic products are based upon the likelihood of death or severe injury should a child come into contact with a product.

A few drops of Extremely Toxic (Division 1) products can cause death if ingested, or two grams on the skin of a child in the case of products posing a dermal toxicity hazard. Such products are not currently routinely or widely sold to consumers.

The intent of the recommendation for the sub-category is that permission for sale only be given where the product offers benefits that cannot be attained by use of alternative, less toxic products. In cases where permission is given, the intent is that the permission be conditional upon the dealer undertaking precautionary measures. These may include use of a child-resistant container in addition to limitations, as appropriate to the product and hazard, on the distribution.

The recommended lower level of Division 2 of the Toxic Hazard category, for oral toxicity, is 500 mg/kg. This is also the dose resulting from a typical swallow exposure of a 10 kg child, 5 mL or 5 g swallow. The recommended lower level for the Division 2 of the Toxic hazard category, for dermal toxicity, is 1000 mg/kg. A child's exposure to products with this or higher dermal toxicity could suffer serious injury or death.

There are numerous references indicating the potentially lethal effects of products posing an aspiration hazard, as discussed on pages 22 to 24. The current *Consumer Chemicals and Containers Regulations* require petroleum distillate containing products to be packaged in child-resistant containers, primarily because of the aspiration hazard.

Products included in Division 2 of the Toxic category for Inhalation toxicity are not included in the child-resistant container criteria. Until such time as there is evidence to the contrary, inhalation toxicity will be a factor in determining whether a substance requires a CRC. However, it seems likely that the majority of calls with an inhalation exposure route occured in adults and were frequently intentional exposures. At this time, the data is not available to support this supposition.

The recommendation to exempt metered containers and spray or mist dispensers is in recognition of limited rate of dispensation of product from such containers, reducing the dose to which a child might be exposed, and hence the risk. The criteria would, however, apply to products packaged in stream dispensers. Although the intention of the review of the *Consumer Chemicals and Containers Regulations* is to develop hazard-based criteria, risk may be considered when feasible.

ii) Corrosive Products

Recommendation

That the *Consumer Chemicals and Containers Regulations* be revised to require that corrosive products, as defined by the specific criteria given below, be packaged in child-resistant containers. This would include products packaged in and dispensed from pump-spray and pressurized containers.

Recommendation - *Criteria for Child-Resistant Container Requirement*

That, for purposes of defining which products are to be required to be packaged in child-resistant containers, corrosive products be considered those products with:

- pH $\geq$ 13.0 or $\leq$ 1.0;
- 11.0 $\leq$ pH < 13.0 and reserve alkalinity > 10 (powders) or > 5 (liquids); or
- 1.0 < pH $\leq$ 3.0 and acid reserve > 10 (powders) or > 5 (liquids).

Rationale - *Corrosive Products*

Corrosive products cause tissue destruction, or necrosis, on contact with the tissue. The damage may be to the skin or eyes, in case of contact, or internal, following ingestion of the product. There are numerous studies on the effects of exposures to corrosives, and on the propensity of children to ingest strong corrosives, especially strongly alkaline materials.[33,34,35,36,37,38,39,40] The potential for very serious injury on exposure to strong corrosives warrants a child-resistant container requirement. The current *Consumer Chemicals and Containers Regulations* require product containing sodium peroxide and liquid drain cleaners to be packaged in child-resistant containers.

The criteria to define corrosives for purposes of child-resistant container requirements were defined separately from the general criteria for corrosives. The intent was to include all products posing a significant corrosive hazard on brief exposure but to not include borderline products which would require a prolonged exposure. It is appropriate to require precautionary labelling on borderline products to alert users to the need to avoid prolonged contact (after the product is splashed on clothing, for example), or to remedial action in the case of ingestion by children. There will be time to take the remedial action to minimize the injury and effects. The recommended criteria will ensure that all products posing a significant corrosivity hazard on brief exposure will be packaged in child-resistant containers.

iii) Adhesives That Quickly Bond Skin

Recommendation

That alkyl cyanoacrylate adhesives and other quick-bonding adhesives with similar characteristics with regard to skin bonding be packaged in child-resistant containers. This recommendation is subject to the outcome of a cost/benefit analysis.

Rationale - *Quick Skin-Bonding Adhesives*

Child-resistant containers for cyanoacrylate adhesives are usually an outer container or vial, in which the smaller immediate container of cyanoacrylate is placed. The immediate container is usually 2 to 5 mL in volume, too small to place a significant amount of labelling, while the larger outer container has space for detailed precautionary labelling.

Statistics from the Centre anti-poison du Québec showed that in 549 cases recorded from 1989 to the present, 68 involved children 5 years or younger. 65% of all cases required the use of a medical facility. US data shows numerous exposures with follow-up hospital treatment, but PADIS (Poison and Drug Information Service) does not show frequent hospital treatment, indicating that the hospital treatment is not necessarily required but is a matter of choice. If prompt medical treatment is given, a major outcome may be averted (and therefore not recorded as such); the different approaches to health care from region to region may account for the difference between data from Québec and PADIS. The cost of treatment and serious outcomes are both of concern.

If there is widespread industry support, and if the cost of treatment of exposures is considered significant, a child-resistant container requirement may be appropriate. The outer vial provides room for labelling and in itself communicates the need to handle the contents with care, and that cyanoacrylates in some other countries are packaged in child-resistant containers even when such containers are not required.

The recommendation is tentative pending the outcome of the cost-benefit analysis.

9. Containers Filled By the User

Recommendation

That the criteria apply to containers designed for and intended to be used with consumer chemical products, including those sold empty to be filled by the user.

Rationale

The hazard presented by containers sold empty and filled by the user is the same as those sold filled.

Notes to Part I - Criteria

1. Gallup Canada (1989). *Consumer Survey on the Labelling of Hazardous Chemical Products*, conducted on behalf of the Product Safety Branch of Consumer and Corporate Affairs Canada: 15-18.

2. Health Canada, *Hazardous Product Act, Controlled Products Regulations*, 1987.

3. Transport Canada, *Transportation of Dangerous Goods Act* and Regulations, 1992.

4. U.S. Consumer Product Safety Commission, Code of Federal Regulations Part 1500.3, Federal Hazardous Substances Act Regulations.

5. Organization for Economic Cooperation and Development, Guidelines for Toxicity Testing.

6. National Institute for Occupational Health and Safety, U.S. Department of Health and Human Services, Registry of Toxic Effects of Chemical Substances (RTECS).

7. CHEMINFO database.

8. Gosselin R.E., Smith R.P. and Hodge H.C. (1984). Clinical Toxicology of Commercial Products. Fifth edition. Williams and Wilkins, Baltimore/London.

9. Abt Associates of Canada (1990). *Impact Assessment of Regulations Governing Hazardous Consumer Chemical Products*, conducted on behalf of the Product Safety Branch of Consumer and Corporate Affairs Canada: 1.

10. Jones D.V. and Work C.E. (1961). Volume of a swallow. *American Journal of Diseases of Children* **102**: 427.

11. Guzelian P.S., Henry C.J., and Olin S.S. (eds). (1992) Similarities and differences between children and adults. *Implications for risk assessment.* ILSI Press, Washington.

12. Watson W.A., Bradford D.C. and Veltri J.C. (1983). The volume of a swallow: correlation of deglutition with patients and container parameters. *American Journal of Emergency Medicine* **3**: 278-281.

13. World Health Organization (1981). Health effects of combined exposures in the work environment. Report of a WHO Expert Committee. *Technical Report Series 662*. World Health Organization, Geneva.

14. Smyth H.F., Weil C.S., West J.S., and Carpenter C.P. (1969). An exploration of joint toxic action: twenty-seven industrial chemicals intubated in rats in all possible pairs. *Toxicology and Applied Pharmacology* **14**: 340-347.

15. Gerarde, H.W. (1963). Toxicological studies on hydrocarbons IX. The aspiration hazard and toxicity of hydrocarbons and hydrocarbon mixtures. *Archives of Environmental Health* **6**: 35-47, 329-341.

16. Gerarde H.W. and Ahlstrom D.B. (1966). The aspiration hazard and toxicity of a homologous series of alcohols. *Archives of Environmental Health* **13**: 457-461.

17. Gerarde H.W. and Eckardt R.E. (1964) Aspiration hazards of petroleum products. *Proceedings of the 14th International Congress of Occupational Health*: 723-727.

18. Panson R.D. and Winek C.L. (1980) Aspiration toxicity of ketones. *Clinical Toxicology* **17**: 271-317.

19. Gosselin R.E., Smith R.P. and Hodge H.C. (1984). *Clinical Toxicology of Commercial Products*. Fifth edition. Williams & Wilkins, Baltimore/London.

20. U.S. Consumer Product Safety Commission, Code of Federal Regulations Part 1500.3 (b) (14), Federal Hazardous Substances Act Regulations.

21. HSDB Hazardous Substances Data Bank. Tomes Plus Data Bank, (c) 1987 1994 Micromedix Inc. Vol. 22, 1994.

22. Hazardtext Hazard Management, Tomes Plus databases. (c) 1987-1994 Micromedix Inc., Vol. 22, 1994.

23. Meditext Medical Management. Tomes Plus Data Bank, (c) 1987-1994 Micromedix Inc. Vol. 22, 1994.

24. Sax N. Irving, and Richard J. Lewis, Dangerous Properties of Industrial Materials, 7th ed. new York, Van Nos. Reinhold. 1989, 3v.

25. Canadian Centre for Occupational Health and Safety (CCOHS) (1993). *Development of a Hazard-Based Criteria Scheme for Consumer Products Using Toxicological Products*, prepared for Health Canada.

26. Gallup Canada Inc. 23.

27. *In Fire Mation*, Official Bulletin of the Fire Commissioner, British Columbia (1994). **3-94**: 2.

28. Ullman's Encyclopedia of Industrial Chemistry, VCH Verlagsgesellschatt, 1985, Vol. A1.

29. Cyanoacrylate Resins, the Instant Adhesives, Monograph, H. Lee Editor, Pasedena Technology Press, 1981. Chapter 20, Surgical Applications of Cyanoacrylate Adhesives.

30. Unintentional Poisoning Among Young Children - United States. 1983. *Journal of the American Medical Association*, **249**: 1700.

31. Gill, D.G. 1983. Changing Patterns of Poisoning in Children, *British Medical Journal* **287**: 1468.

32. Rodgers, Gregory; The Safety Effects of Child-Resistant Closures; May, 1992, for the US Consumer Product Safety Commission.

33. Haller et al. 1971. Pathophysiology and Management of Acute Corrosive Burns of the Esophagus: Results of Treatment in 285 Children, *Journal of Pediatric Surgery*, **6**: 578 - 584

34. Kikendall, James W. 1991. Caustic Ingestion Injuries, *Gastroenterology Clinics of North America*, **20**: 847 - 857

35. Kynaston et al. 1989. The hazards of automatic-dishwasher detergent, *Medical Journal of Australia*, **151**: 5 - 7

36. Lee, J.F., D. Simononwitz and George E. Block. 1972. Corrosive Injury of the Stomache and Esophagus by Nonphosphate Detergents, *New American Journal of Surgery*, **123**: 652 - 656

37. Rothstein, Fred C. 1986. Caustic Injuries to the Esophagus in Children, *Pediatric Toxicology*, **33**: 665 - 673

38. Vancura et al. 1980. Toxicity of Alkaline Solutions, *American Emergency Medicine*, **9**: 118 - 122

39. Vergauwen et al. 1991. Caustic Burns of the Upper Digestive and Respiratory Tracts, *Pediatrics*, 700 - 703

40. Viscomi et al. 1961. An evaluation of early esphagoscopy and corticosteroid therapy in the management of corrosive injury of the esophagus, *Journal of Pediatrics*, **59**: 356 - 359