DS#5249

CPSC/OFFICE OF
THE SECRETARY
1998 DEC 17 A 10: 48

BRIEFING PACKAGE FOR BUNK BEDS

December 1998

For Further Information, Contact:
John D. Preston
Project Manager
Directorate for Engineering Sciences
301-504-0494, Ext. 1315

CPSA 6 (b)(1) Cleared
12/16/98
No Mfrs/PrvtLblrs or WITH REMOVED
Products Identified ATTACHMENT A

NOTE: This document has not been reviewed or accepted by the Commission.
Initial rh Date 12/16/98

Table of Contents

	Page
Briefing Memorandum	1
I. Issue	1
II. Background	1
III. Discussion	2
A. Incident Data	2
B. Conformance to Entrapment Requirements in ASTM Standard	5
C. Response to Comments to ANPR	7
D. Product and Market Information	10
E. Cost/Benefit Considerations	10
F. Preliminary Environmental Assessment	13
IV. Options	13
V. Conclusions and Recommendations	14
Attachments	
Tab A Memorandum from Deborah K. Tinsworth, EHHA and Joyce McDonald, EHHA to John Preston, ES, entitled, "Bunk Bed Death and Injury Update, dated, October 27, 1998.	15
Tab B Memorandum from Catherine A. Cumberland, EXC to John Preston, ES, entitled, "Bunk Bed Recalls," dated October 8, 1997.	22
Tab C Memorandum from Pamela C. Major, EXC to John Preston, ES, entitled, "Conformance of Bunk Beds with Voluntary Standard, ASTM F1427-96," dated, November 19, 1998.	25
Tab D Memorandum from John D. Preston, ES to The File, entitled, "Proposed Mandatory Rule for Bunk Beds," dated, December 7, 1998, with attached Draft Proposed Requirements and Tests for Bunk Bed NPR.	36
Tab E Memorandum from Celestine T. Kiss, ESHF entitled, "Human Factors (HF) Response to ANPR Comments on Bunk Beds," dated, July 30, 1998.	42
Tab F Memorandum from Terrance R. Karels, EC to John D. Preston, ES, entitled "Preliminary Regulatory Analysis - - Bunk Beds," dated, December 14, 1998.	45

United States
CONSUMER PRODUCT SAFETY COMMISSION
Washington, D.C. 20207

MEMORANDUM

DATE: DEC 16 1998

TO : The Commission
Sadye E. Dunn, Secretary

Through: Jeffrey S. Bromme, General Counsel
Pamela Gilbert, Executive Director C.T.B. for P.G.

FROM : Ronald L. Medford, Assistant Executive Director RLM
Office of Hazard Identification and Reduction
John D. Preston, Project Manager, ES
(301) 504-0494 Ext. 1315

SUBJECT: Proposed Rule to Address Fatal Entrapment Incidents Associated with Bunk Beds

I. ISSUE

Whether the Commission should propose regulations, under both the Consumer Product Safety Act (CPSA) and Federal Hazardous Substances Act (FHSA), to require bunk beds to comply with certain requirements addressing entrapment and strangulation of children.

II. BACKGROUND

On January 8, 1998, the Commission voted 2-1 to publish an advance notice of proposed rulemaking (ANPR) to begin a proceeding that could result in a mandatory rule to address entrapment hazards associated with bunk beds. The ANPR was published in the Federal Register on January 22, 1998, and requested that comments be submitted by April 7, 1998. In response to the ANPR, 418 comments were received.

The Commission issued the ANPR to gather additional information about the need for a mandatory standard for bunk beds because of the Commission's concern about numerous recalls over the past four years. These recalls involved over one-half million bunk beds that did not conform to the entrapment requirements in the Standard Consumer Safety Specification for Bunk Beds, ASTM F1427-96 (ASTM standard).

NOTE: This document has not been reviewed or accepted by the Commission.
Initial rh Date 12/16/98

CPSA 6 (b)(1) Cleared
12/16/98 PL WITH REMOVED ATTACHMENT A AT TAB C
No Mfrs/PrvtLblrs or Products Identified
Excepted by ANPR

To protect children from entrapment, the ASTM standard requires that:

- there be guardrails on both sides of the upper bunk

- openings in the structure surrounding the upper bunk be small enough to prevent passage of a block measuring 3.5 inches by 6.2 inches

- openings in the end structures within a height of 9 inches above the sleeping surface of the lower bunk mattress be small enough to prevent passage of a block measuring 3.5 inches by 6.2 inches or large enough to permit passage of a 9-inch diameter sphere.

III. DISCUSSION

A. Incident Data (TAB A)

Deaths

Since the Commission briefing on January 8, 1998, the staff has become aware of four additional bunk bed-related fatalities, three of which involved entrapment. In two of the entrapment incidents, children aged 8 and 17 months became entrapped between the lower bunk and an adjacent wall, and, in the third, a developmentally disabled 22-month-old child became entrapped by the neck between a ladder rung and the mattress of a lower bunk. The fourth fatality occurred when a 19-month-old child became entwined in a necktie tied to a bunk bed.

From January 1990 through October 23, 1998, CPSC received reports of 89 bunk bed-related fatalities of children under 15 years of age (see Table 1 below).

TABLE 1 - FATAL BUNK BED INCIDENTS REPORTED TO CPSC, BY YEAR AND HAZARD PATTERN

		Hazard Pattern		
Year	Total	Entrap.	Hanging	Falls
Total	89	57	24	8
1990	7	5	2	--
1991	15	10	2	3
1992	4	3	1	--
1993	19	10	7	2
1994	10	6	3	1
1995	12	5	5	2
1996	12	11	1	--
1997	8	6	2	--
1998	2	1	1	--

SOURCE: CPSC data files, January 1990 - October 1998

Of the 89 fatalities, 57 (64 percent) were the result of entrapment. An additional 24 children died when they inadvertently became hung from the bed by such items as belts, ropes, clothing, and bedding, and eight children died in falls from bunk beds.

As shown in Table 2, over 96 percent (55 of 57) of those who died in entrapment incidents were age 3 and younger, and all but one were younger than 5. In contrast, almost 80 percent (19 of 24) of those who died in hanging incidents were age 6 and older. Eight fall-related deaths occurred during this period and involved both pre-school and older victims.

Using statistical methodology, a national estimate of the total annual entrapment deaths was developed. About ten bunk bed-related entrapment deaths are estimated to have occurred each year since 1990.

TABLE 2 - FATAL BUNK BED INCIDENTS REPORTED TO CPSC, BY VICTIM AGE AND HAZARD PATTERN (JANUARY 1990 - OCTOBER 1998)

Age		Hazard Pattern		
(years)	Total	Entrap.	Hanging	Falls
Total	89	57	24	8
<1	18	16	1	1
1	20	19	1	--
2	15	13	1	1
3	8	7	--	1
4	4	1	1	2
5	1	--	1	--
6	3	--	3	--
7	3	1	2	--
8	2	--	2	--
9	3	--	2	1
10+	12	--	10	2

SOURCE: CPSC data files, January 1990 - October 1998

Injuries

From data reported through the National Electronic Injury Surveillance System (NEISS), staff estimates that about 31,400 bunk bed-related injuries to children under the age of 15 were treated in U.S. hospital emergency rooms during 1997. Almost one-half (43 percent) of the victims were younger than 5 years. A review of the descriptive comments received for each injury revealed that falls from the bed were involved in almost all cases in which the circumstances were reported. Virtually none of the reported incidents involved entrapment or hanging, which generally results in either death or no injury. About two percent of the victims were hospitalized.

Entrapment Incidents

Entrapment-related incidents, which accounted for the majority of deaths, were reviewed in further detail to provide additional information about the circumstances involved. Both fatal and "near-miss" incidents were included. The "near-miss" incidents, usually reported through consumer complaints, were those in which a child became entrapped in the bed, often requiring rescue by the parent or caregiver. In these cases, there were generally no injuries or injuries were minor (contusions/abrasions). However, "near-miss" incidents were examined because they were judged to have the potential for death or serious injury.

CPSC received reports of at least 13 additional entrapment incidents (3 fatal) since the January 8, 1998 Commission briefing. This results in a total of 116 incidents from January 1990 through October 23, 1998, 57 of which were fatalities and 59 were "near-misses." Table 3 illustrates the location in the bunk bed of the entrapments.

TABLE 3 - LOCATION IN BUNK BED OF FATAL AND "NEAR-MISS" ENTRAPMENT INCIDENTS

Location of Entrapment	Total	Type of Incident: Fatal	Type of Incident: Near-Miss
Total	116	57	59
Top Bunk	74	39	35
Guardrail	48	27	21
Bed/Wall	11	9	2
End Structure	12	1	11
Add-On Rail	1	1	--
Other	1	--	1
Unk.	1	1	--
Bottom Bunk	26	12	14
Guardrail	1	--	1
Bed/Wall	6	6	--
End Structure	13	3	10
Add-On Rail	2	2	--
Other	4	1	3
Ladder	5	2	3
Unknown Bunk	11	4	7
Guardrail	2	--	2
Bed/Wall	1	1	--
End Structure	4	--	4
"Safety Rails"	1	1	--
Other	1	--	1
Unk.	2	2	--

SOURCE: CPSC data files, January 1990 - October 1998

As shown in Table 3, 74 of the entrapment incidents involved the top bunk, 26 involved the bottom bunk, and five involved the ladder. Where information was available, it appeared that all but three of the incidents involving fatal entrapment in the structure of bunk beds occurred on beds not meeting the entrapment requirements in the ASTM standard. Of the three incidents involving beds that appeared to conform to the entrapment requirements, two involved entrapment in the upper bunk. In these incidents, an 18-month-old infant and a child who was almost 5 years old slipped through the space between the end of the guardrail and the bed end structure and became wedged between the bed and a wall. In the third incident, a 22-month-old child became entrapped by the head in an opening between the underside of the upper bunk foundation support and a curved structural member in the bunk bed end structure.

B. Conformance to Entrapment Requirements in ASTM Standard (Tabs B & C)

Between November 1994 and September 1997, 41 manufacturers recalled bunk beds that did not conform to the entrapment requirements in the ASTM standard. The recalls were the result of intensive inspections of bunk bed retailers by the Field staff and involved over one-half million bunk beds (see Tab B).

At the request of EXC, during February and April 1998, CPSC's Field staff conducted limited inspections of low-end bunk bed retailers to determine conformance with the entrapment requirements in the ASTM standard (Tab C). Field staff were assigned to visit low-end retail furniture stores to look for bunk beds that may present an entrapment hazard. They were instructed to obtain measurements of openings in the bed structure, count the number of guardrails, obtain the name and address of the bunk bed's manufacturer, distributor or importer and obtain copies of the invoice for any bunk bed in violation of the entrapment requirements. Field staff was also requested to obtain statements regarding incident reports and the level of knowledge possessed by the retail store staff regarding the ASTM standard for bunk beds.

The field staff visited 55 retail stores in 39 cities and examined 145 bunk bed models from 58 manufacturers. Of these, 23 firms had at least one model of bunk bed that did not conform to the ASTM standard and seven of those firms were repeat violators. The staffs of the Office of Compliance and Engineering Sciences evaluated the information submitted by the Field staff and preliminarily determined that bunk beds made by seven of the 23 firms presented a substantial product hazard. Two of these firms were out of business, and five firms were requested to recall/retrofit their nonconforming bunk beds. A CPSC News Release announcing this recall was issued on November 10, 1998. Sixteen of the twenty-three firms had nonconforming bunk beds that the staff believed would not present a substantial risk of entrapment. For example, the openings in the structure of the upper bunk bed were only slightly larger than the spacing requirements of the ASTM standard, and a child's torso would not be likely to slip into these openings. However, letters were sent to these firms notifying them of their nonconformance and asking them to correct future production.

Table 4 below, lists the number of beds produced by the five manufacturers whose beds were found to have serious violations of the entrapment requirements in the ASTM standard.

TABLE 4 - NUMBER OF BUNK BEDS SUBJECT TO RECALL				
Manufacturer	No. of Models/ Start Date	Annual Sales	Total Sales Since Start Date	Knowledge of ASTM Standard
A*	5/1995	8,000	14,477	Yes[1]
B*	2/1997	2,000	2,463	Yes[2]
C	1/1994	150	600	Yes[3]
D	1/1986	1,500	18,000	No[4]
E	1/1997	514	1,028	No[5]
	Total	12,164	36,568	

* Repeat Violators

[1] Company recalled several bunk beds in 1995. President of company said he thought he was in conformance.
[2] Company is an importer of beds from Brazil and claimed to have knowledge of the ASTM standard but not with respect to the guardrail issue.
[3] Company was aware of the ASTM standard but claimed to have misinterpreted certain requirements.
[4] Company claimed to have no knowledge of the ASTM standard.
[5] During a 1998 inspection, the plant manager claimed no knowledge of the ASTM standard.

The Table shows that the 1998 limited retail inspections resulted in the recall of over 36,000 bunk beds. The total annual sales of beds produced by the 58 manufacturers whose beds were examined during the inspections is not known. The table also shows that three of the five manufacturers whose beds were found to have serious entrapment hazards were aware of the existence of the ASTM standard and two had been previously notified by CPSC that their beds did not conform to the standard.

In the November 1997 briefing package, the staff reported it was aware of 106 bunk bed manufacturers. As a result of the recent retail inspections of furniture retailers and a search of the Internet, staff is now aware of 160 manufacturers and importers of bunk beds. It is evident from the history of the staff's efforts to identify nonconforming bunk beds that there are many small firms that enter this market and do not conform to the ASTM standard either because they are unaware of it or because they do not believe they need to conform because the standard is voluntary.

Compliance staff indicates that a mandatory standard would:

- enable the staff to seek civil penalties for violations that would deter other manufacturers from making non-complying beds,
- increase the identification and subsequent recalls of non-complying beds by state and local officials who are familiar with mandatory rules enforced by CPSC,
- increase compliance by retailers and distributors who require that products they sell meet applicable Federal standards,
- prevent non-complying beds made by foreign manufacturers from entering the United States through cooperative efforts with the U.S. Customs Service.

EXC concludes that the bunk bed industry is highly diverse and fragmented, with differing levels of sophistication relating to product safety. Firms can easily enter and leave the bunk bed manufacturing business. EXC staff believes that firms are more likely to be aware of a mandatory standard rather than a voluntary standard. EXC staff believes that a mandatory standard would maximize industry awareness.

A mandatory standard would also reduce the staff's workload in ensuring that children are not exposed to bunk beds presenting entrapment hazards. In the past several years, the staff has expended significant resources to obtain the current level of conformance to the ASTM standard. If the Commission issues a mandatory standard, it is expected that fewer resources would be required to enforce the standard than are currently being used to identify defective bunk beds.

C. Response to Comments to ANPR

A total of 418 comments were received in response to the publication of the ANPR for bunk beds. Of these, 396 commenters were in favor of a mandatory rule, 19 were opposed to such a rule and three did not express an opinion on whether they favored a mandatory rule.

Of the 396 commenters who favored a mandatory rule, 355 submitted a form letter stating: *"If one child dies due to unsafe bunk bed design and manufacture this questions whether voluntary standards in the industry are sufficient to protect our children. Due to the fact that there were more than 45 fatalities and over 100,000 injuries from 1990 to 1995, I feel that is overwhelming evidence that mandatory standards* ***must*** *be passed to insure that this tragedy does not strike another American family."*

Forty-four comments were received from students at the University of Tennessee, School of Law. Twenty-eight of the students favored a mandatory rule, fifteen opposed such a rule and one expressed no opinion.

Six comments from proponents of a mandatory rule suggested that such a rule should have more stringent requirements than the current ASTM standard to address falls from the upper bunk. While most commenters expressing this view did not suggest specific provisions to address falls, thirteen commenters also suggested eliminating the 15-inch wide openings in the guardrail on the wall side of a bed to address the two deaths occurring on conforming beds in which children age 18 months and almost 5 years slipped through the openings and became entrapped between the bed and a wall. In addition, some commenters felt that eliminating the 15-inch openings between the ends of the side guardrails and the bed end structures that are permitted by the current ASTM standard on both sides of the bed may reduce the likelihood of falls.

In most cases, incident data do not reveal the precise cause of falls from the upper bunk. Some cases stated that the fall was associated with the use of the ladder but did not state whether the ladder could be accessed through a 15-inch-wide opening in the guardrail or whether it could only be reached by climbing over a continuous guardrail or over the end structure of the upper bunk. It is possible that having to climb over the guardrail or end structure to get on or off the ladder could increase the incidence of falls. Since the staff cannot determine whether continuous guardrails on both sides of the upper bunk would significantly affect the likelihood of a fall, such a requirement is not included in the draft proposed rule (see Tab D).

Staff agrees with the 13 commenters who suggested eliminating the 15-inch-wide openings between ends of guardrails and bed end structures on the wall side of the upper bunk to minimize the likelihood of entrapment between the upper bunk of the bed and a wall. Accordingly, the draft proposed rule (at Tab D) requires a side guardrail on one side of the upper bunk to extend continuously between the end structures.

Seven commenters suggested that a mandatory rule should include the lower bunk entrapment requirements in the ASTM standard but apply them to the entire end structure that is below the level of the upper bunk mattress support system. Such a requirement would address a fatal incident that occurred on a bed conforming to the current ASTM standard. That incident involved a 22-month-old child who became entrapped by the head in an opening between the underside of the upper bunk foundation support and a curved structural member in the bed end structure. The current ASTM standard has lower bunk entrapment requirements that apply only to the portion of the end structure that is between the level of the lower bunk mattress support system and a level that is 9 inches above the sleeping surface of the lower bunk when it is equipped with a mattress having the maximum thickness recommended by the manufacturer.

The staff agrees with these commenters, and the draft proposed rule (at Tab D) contains a requirement addressing entrapment in lower bunk bed end structures that is similar to that in the ASTM standard but expands the scope to cover the entire portion of the bed end

structures that extends between the level of the lower and upper bunk foundation support systems. While this may require a change in the design of the end structures of some bunk beds, ES staff believes that the cost would be small.

Sixteen commenters noted that a majority of the entrapment deaths involved very young children, who should not be placed on the upper bunk of a bunk bed. These commenters were about equally divided between proponents of a mandatory rule and opponents of such a rule. Voicing concern that the parents of the victims were probably unaware of the hazard of placing these young children on the upper bunk, they suggested that the Commission could join with the American Furniture Manufacturers Association (AFMA) in mounting a public awareness campaign. AFMA represents manufacturers of bunk beds. The first bunk bed safety guideline became effective in 1979 and required a label which, among other warnings, stated "Prohibit children under 6 years on upper bunk." The current (1996) ASTM standard also bears a similar statement. For almost 20 years, bunk beds conforming to the applicable safety guideline or voluntary standard have warned against placing children under six years on the upper bunk, yet consumers continue this practice. The draft proposed rule also contains a requirement for a warning label. However, the staff believes the most effective way to address entrapment is to design the bed so that it does not present this hazard to children under 6 years-of-age since the staff is aware that some parents are placing their young children on the upper bunk.

A furniture retailer submitted comments opposing a mandatory rule on the grounds that:

- the number of injuries associated with bunk bed entrapment are minimal
- for protection, a retailer would be required to engage in his own testing thereby dramatically increasing the price [of a bunk bed] to the customer
- a mandatory standard ignores a major contributing factor to bunk bed accidents, consumer installation and consumer bedding choice.

While entrapment generally does not result in an injury requiring medical attention, it is the leading cause of death associated with bunk beds, and the draft proposed rule is primarily intended to address entrapment fatalities. The staff does not agree that a mandatory rule would force retailers to incur the cost of having bunk beds tested. If retailers are concerned that manufacturers may claim conformance when in fact their products do not conform, the tests in the draft proposed rule are simple enough that retailers could check for conformance themselves. CPSC staff is not aware of any incidents resulting from consumer mis-assembly or from incorrect choice of bedding.

A trade association and an organization known as "Consumer Alert" question the legality of a rulemaking proceeding in light of the staff's estimate of the current conformance to the ASTM standard - believed to be about 90 percent or more. The staff believes that measures that can be taken to reduce the likelihood that consumers will purchase a bunk bed presenting entrapment hazards to children are justifiable.

An independent testing laboratory that currently operates a third-party certification program stated that they believe that such a certification program indicating conformance to the ASTM standard would be more productive than a mandatory rule. The laboratory suggested that CPSC could recognize the certification program and encourage manufacturers to join it as CPSC presently does for seven juvenile products certification programs. The staff does not believe that recognition of a third-party certification program would have a significant effect on the degree of conformance to the ASTM standard, because the firms that have been found to be in violation of the entrapment provision in the standard are small.

D. Product and Market Information

A preliminary regulatory analysis at Tab F contains product and market information. It states that the retail price of a bunk bed ranges from $100 to $700 and that manufacturers estimate the average retail price is $300. The AFMA represents manufacturers of bunk beds. According to AFMA, some 40 firms, either members of their association or members of the ASTM subcommittee for bunk beds, account for about 75-80 percent of total bunk bed sales. The staff is currently aware of 160 manufacturers and importers of bunk beds, including the 40 AFMA or ASTM subcommittee members. The market share accounted for by the other 120 identified firms is believed to be 20-25 percent. Based on the staff's prior experience in identifying additional nonconforming manufacturers each time inspections are conducted, the staff believes that it is very likely that there are a number of firms producing bunk beds of which the CPSC staff is not aware.

Industry sources estimate that about 500,000 bunk beds are sold annually, and that the expected useful life of bunk beds is 13 to 17 years. Based on the CPSC's Product Population Model (a statistical model which estimates how many of a product are in use at a given time), there may be some 7-9 million bunk beds available for use; this includes beds not in active use and those in use as two separate beds.

Historically, imports have accounted for only a small part of the U.S. market for bunk beds. This is due, in large part, to the cost of shipping a relatively bulky item. AFMA spokesmen reported that they are not aware of the number of imported bunk beds, but they indicated that imports of bunk beds by their members appear to be increasing.

E. Cost/Benefit Considerations

Costs of Conforming to the ASTM Standard

The preliminary regulatory analysis at Tab E states that costs associated with the draft proposed rule only apply to those firms not now conforming to the ASTM standard, together with the cost of any Commission-added requirements in the rule. In order to provide some preliminary information regarding these costs, CPSC Economic Analysis (EC) staff contacted four manufacturers that had modified their beds to conform to the ASTM standard.

Two of these manufacturers stated that the cost of additional materials needed to address entrapment was nominal compared to overall materials costs, and that redesign costs would not be significant on a per-unit basis. They estimated that the addition of a second guardrail to the top bunk added $15-20 to the retail price of a bed. The other manufacturers, marketing bunk beds in the "mid to upper" price range, estimated that the addition of the second guardrail resulted in a $30-40 per bed increase in the retail price. Based on the information provided by these firms, staff estimates that the overall retail price increase for conformance with the ASTM standard could be between $15-40 per nonconforming bed.

Benefits of Conforming to the ASTM Standard

The draft proposed rule is intended to address the risk of entrapment deaths of children from bunk beds. The potential benefits to the public would be a decrease in these entrapment deaths.

To determine the expected benefits of the draft proposed rule it is necessary to estimate the risk of entrapment deaths in terms of "deaths per nonconforming bed" and the expected reduction in risk.

Many of the bunk beds produced in the early to mid-1980s, which may have had substantially less conformance to the ASTM standard, have reached the end of their average expected useful lives and are probably no longer in use as bunk beds. Therefore, although the staff cannot precisely estimate what proportion of bunk beds in current use conform to the ASTM standard, the percentage likely falls between 50 and 90 percent. Assuming a "conforming" range between these extremes, on the order of from 70 to 85 percent, some 15 to 30 percent of bunk beds in use since the early 1990s would not be expected to conform to the ASTM standard for upper bunk entrapment.

The estimated number of bunk beds in use is 8 million and it is estimated that 15-30 percent of these do not conform to the ASTM standard and, therefore, would not conform to the staff's draft proposed rule. The fatalities may then be assumed to spread over a population of some 1.2 to 2.4 million nonconforming beds. Epidemiology staff estimates that about 10 entrapment fatalities have occurred annually since 1990. ES staff has stated that if the beds involved in the 57 entrapment deaths had conformed to the proposed rule, 40 fatalities (70%) would have been averted (The remaining 30% of the entrapment deaths resulted from scenarios that are not unique to bunk beds, such as entrapments between bed and wall in the lower bunk). Therefore, the risk of fatal entrapment that the proposed rule could address is from 2.9 to 5.8 deaths per million nonconforming beds.

The Economics memo at Tab F states that if 15 years is the useful life for a bunk bed, and assuming a discount rate of 3%, the estimated *present value* of averting the entrapment fatalities addressed by the ASTM standard ranges from $175 to $350 per nonconforming bed.

This is the total potential benefit of averting 100% of the risk of death from a nonconforming bed over its useful life.

Comparison of Costs and Benefits

The relationship between costs and benefits depends on the effectiveness of the draft proposed rule. Two factors enter into the calculation of the level of effectiveness required to put costs and benefits in balance:

- the cost of conformance: $15-40 per bed, and
- the proportion of nonconforming bunk beds in use: 15-30% (yielding potential benefits of from $350 to $175 per bed, respectively, since the lower the proportion, the higher the per nonconforming bed risk and the corresponding benefits of avoiding the risk).

ES staff concludes that, if bunk beds are manufactured to comply with the draft proposed rule and are assembled correctly, all entrapment fatalities associated with upper bunk guardrails, end structures and bed/wall should be averted, as would fatalities associated with lower bunk end structures. The proposed rule is, therefore, expected to be highly effective.

Requirements in Addition to Those in the ASTM Standard

Continuous Guard Rail - The current ASTM standard permits the guardrails on both sides of the upper bunk to terminate not more than 15 inches from the bed end structures. Staff recommends an additional provision that would require one guardrail on the upper bunk, on the wall side, to be continuous from one end to the other. The continuous guardrail would address two entrapment deaths that occurred when children slipped feet-first through an opening in the guardrail on the wall-side of a bunk bed and became entrapped between the bed and wall.

Trade sources indicated that perhaps 50-75 percent of all bunk beds in use have openings between the ends of the guardrails and the bed end structure. If this percentage range is used, then some 4-6 million beds with these openings would have been in use for each of the years in the study period. Over that period of time, 101 months, there were two fatalities, or 0.24 per year. The rate of death was .24/4 million to .24/6 million deaths per bed per year. At an assumed cost of $5 million per death, the annual societal benefit in averting these deaths would be is $0.20 to $0.30 per bed per year. If we assume an average useful life of 15 years and a 3 percent discount rate, the estimated present value of this effort would be $2.40 to $3.50 per nonconforming bed over its useful life.

The precise cost of eliminating the 15-inch openings in the wall side guardrail is unknown. However, according to ES (see Tab D), the cost is expected to be less than the benefits.

Lower Bunk End Structure - The ASTM standard contains a requirement addressing entrapment in lower bunk end structures but restricts it to that portion of the end structure that extends from the level of the lower bunk mattress foundation support system to a level that is 9 inches above the top surface of the lower bunk mattress. Staff is aware of a fatal entrapment incident in which a child's head became entrapped in an opening between the underside of the upper bunk mattress foundation and a structural member that was about 3¾ inches below the foundation. To prevent future incidents of this type, the draft proposed rule uses the same test procedure as the ASTM standard but extends the scope of the requirement to cover any portion of the bed end structure that is above the level of the top of the lower bunk foundation and below the level of the underside of the upper bunk foundation. Some bunk beds have end structures that will require redesign to meet the proposed requirement. However, according to ES, other than the cost of the redesign, the requirement will not increase the cost of a bunk bed due to added materials. Indeed, for some bunk beds, material may have to be removed to enlarge existing openings. When amortized over the total production, the cost per bed of the redesign is likely to be very small.

F. Preliminary Environmental Assessment

In a preliminary environmental assessment at Tab E, EC states that the draft proposed rule is not expected to have a significant effect on the materials used in the production and packaging of bunk beds, or in the number of units discarded after the rule becomes effective. Therefore, no significant environmental effects would result from the draft proposed mandatory rule for bunk beds.

IV. OPTIONS

1. If the Commission preliminarily believes that conformance to the ASTM standard for bunk beds is not satisfactory and/or that the voluntary standard does not adequately address entrapment hazards, and that a rule may be reasonably necessary to address an unreasonable risk of injury, it could publish a notice of proposed rulemaking (NPR).

2. If the Commission believes that conformance to the ASTM standard for bunk beds is satisfactory but that changes to the ASTM voluntary standard are needed to address hazards the standard does not currently address, the Commission could direct the staff to contact the ASTM F15.30 Subcommittee and request a revision of certain provisions in the standard.

3. If the Commission believes that conformance to the ASTM standard is acceptable and that the current ASTM standard is adequate to address the entrapment hazards associated with the use of bunk beds, or if the Commission believes that available information does not indicate that a rule is necessary to address an unreasonable risk of injury, the Commission could terminate the project.

V. CONCLUSIONS AND RECOMMENDATIONS

The staff recommends that the Commission publish a notice of proposed rulemaking to seek public comments on the draft proposed rule at Tab D (option 1). The staff believes that a mandatory rule would increase the compliance by bunk bed manufacturers over that which exists to the current ASTM standard because it would:

1. increase compliance by retailers and distributors who require that products they sell meet applicable Federal standards,

2. increase the identification and subsequent recalls of non-complying beds by state and local officials who are familiar with mandatory rules enforced by CPSC,

3. enable the staff to seek civil penalties for violations that would deter other manufacturers from making non-complying beds, and

4. prevent non-complying beds made by foreign manufacturers from entering the United States through cooperative efforts with the U.S. Customs Service.

The staff also believes that the benefits that a mandatory standard will have on compliance will allow the CPSC staff to allocate fewer resources to the enforcement effort and still have a highly effective enforcement program for bunk beds.

A

United States
CONSUMER PRODUCT SAFETY COMMISSION
Washington, D.C. 20207

MEMORANDUM

DATE: OCT 27 1998

TO : John Preston, ESME

Through: Mary Ann Danello, Ph.D., Associate Executive Director
Directorate for Epidemiology and Health Sciences
Susan Ahmed, Ph.D., Director
Division of Hazard Analysis

FROM : Deborah Tinsworth, EHHA
Joyce McDonald, EHHA

SUBJECT: Bunk Bed Death and Injury Update

This updates the November 18, 1997 EHHA memorandum on bunk bed deaths and injuries. It also responds to public comments received in response to the U.S. Consumer Product Safety Commission (CPSC) December 1997 Advance Notice of Public Rulemaking on bunk bed entrapment.

DEATHS

Since the November 1997 memorandum, four additional bunk bed-related deaths were reported to CPSC, of which three involved entrapment.[1] Thus, from January 1990 through October 23, 1998, CPSC has received reports of 89 bunk bed-related deaths to children under 15 years of age (Table 1).[2] Of these, 57 (64 percent) were the result of entrapment. An additional 24 children died when they inadvertently became hung from the bed by such items as belts, ropes, clothing, and bedding. Eight children died due to falls from bunk beds.

---

[1]In one entrapment incident, a developmentally disabled 22-month-old child was reported to have caught his neck between a ladder rung and the mattress top of the lower bunk of the tubular metal bed in which he had been sleeping, although the specific circumstances were somewhat unclear. In the other two entrapment incidents, an 8-month-old child and 17-month-old child became caught between the lower wooden bunk and the adjacent wall. A hanging death occurred when a 19-month-old child became entwined in a necktie tied to a bunk bed.

[2]These deaths are neither a complete count of all that occurred during this time period nor a sample of known probability of selection. However, they provide a minimum number of deaths occurring in this time period and illustrate the circumstances involved in some serious bunk bed-related incidents.

TABLE 1

FATAL BUNK BED INCIDENTS REPORTED TO CPSC,
BY YEAR AND HAZARD PATTERN
(JANUARY 1990-OCTOBER 1998)

		Hazard Pattern		
Year	Total	Entrap.	Hanging	Falls
Total	89	57	24	8
1990	7	5	2	--
1991	15	10	2	3
1992	4	3	1	--
1993	19	10	7	2
1994	10	6	3	1
1995	12	5	5	2
1996	12	11	1	--
1997	8	6	2	--
1998	2	1	1	--

SOURCE: CPSC data files, January 1990-October 1998
U.S. CONSUMER PRODUCT SAFETY COMMISSION\EHHA

As shown in Table 2, over 96 percent (55 of 57) of those who died in entrapment incidents were age 3 and younger, and all but one were younger than 5. In contrast, almost 80 percent (19 of 24) of those who died in hanging incidents were age 6 and older. Fall deaths involved both pre-school and older victims.

TABLE 2

FATAL BUNK BED INCIDENTS REPORTED TO CPSC,
BY VICTIM AGE AND HAZARD PATTERN
(JANUARY 1990 - OCTOBER 1998)

Age (years)	Total	Hazard Pattern		
		Entrap.	Hanging	Falls
Total	89	57	24	8
< 1	18	16	1	1
1	20	19	1	--
2	15	13	1	1
3	8	7	--	1
4	4	1	1	2
5	1	--	1	--
6	3	--	3	--
7	3	1	2	--
8	2	--	2	--
9	3	--	2	1
10+	12	--	10	2

SOURCE: CPSC data files, January 1990-October 1998
U.S. CONSUMER PRODUCT SAFETY COMMISSION\EHHA

For entrapment hazards, a national estimate of the total annual number of deaths was also developed. Using statistical methodology that examined the extent of overlap between data reporting sources (capture/recapture), about ten bunk bed entrapment deaths were estimated to have occurred annually since 1990 (95% confidence interval = (6.0, 14.4)).

INJURIES

Based on data from CPSC's National Electronic Injury Surveillance System (NEISS), there were an estimated 31,400 bunk bed-related injuries to children under the age of 15 treated in U.S. hospital emergency rooms in 1997. Almost one-half (43 percent) of the victims were younger than 5 years. A review of the descriptive comments received for each injury revealed that falls from the bed were involved in almost all cases in which the circumstances were reported. Virtually none of the incidents involved entrapment or hanging. About two percent of the victims were admitted for further hospitalization.

Notably, over one-half (55 percent) of the injuries involved the head/face area. The arm/hand area was involved in about 25 percent of the injuries, followed by the leg/foot area, with about 12 percent of the injuries.

ENTRAPMENT INCIDENTS

Entrapment-related incidents, which accounted for the majority of deaths, were reviewed in further detail to provide additional information about the circumstances involved. Both fatal and "near-miss" incidents were included. The "near-miss" incidents, usually reported through consumer complaints, were those in which a child became entrapped in the bed, often requiring rescue by the parent or caregiver. In these cases, there were generally no injuries or injuries were minor (contusions/abrasions). However, "near-miss" incidents were included because they were judged to have the potential for death or serious injury.

In all, CPSC received reports of at least 13 more entrapment incidents (3 fatal) since the November 1997 EHHA memorandum, for a total of 116 from January 1990 through October 23, 1998. Of the 116 incidents, 57 involved deaths and 59 involved "near-misses." As shown in Table 3, 74 of the entrapment incidents involved the top bunk, 26 involved the bottom bunk, and 5 involved the ladder.

Where information was available, it appeared that all but three of the 57 fatal entrapment incidents occurred on beds that did not meet the entrapment requirements of the voluntary standard. Of the three incidents, two involved entrapment in the upper bunk. In these separate incidents, an 18-month old infant and a child who was almost 5 years old slipped through the space between the end of the guardrail and the bed end structure and became wedged between the bed and a wall. In the third incident, a 22-month child became entrapped by the head in an opening between the underside of the upper bunk foundation support and a curved structural member in the bunk bed end structure.

TABLE 3

LOCATION OF BUNK BED ENTRAPMENT
FOR FATAL AND "NEAR-MISS" INCIDENTS
(JANUARY 1990 - OCTOBER 1998)

Location of Entrapment	Total	Type of Incident	
		Fatal	Near-Miss
Total	116	57	59
Top Bunk	74	39	35
Guardrail	48	27	21
Bed/Wall	11	9	2
End Structure	12	1	11
Add-On Rail	1	1	--
Other	1	--	1
Unk	1	1	--
Bottom Bunk	26	12	14
Guardrail	1	--	1
Bed/Wall	6	6	--
End Structure	13	3	10
Add-On Rail	2	2	--
Other	4	1	3
Ladder	5	2	3
Unknown Bunk	11	4	7
Guardrail	2	--	2
Bed/Wall	1	1	--
End Structure	4	--	4
"Safety Rails"	1	1	--
Other	1	--	1
Unk	2	2	--

SOURCE: CPSC data files, January 1990-October 1998
U.S. CONSUMER PRODUCT SAFETY COMMISSION\EHHA

RESPONSE TO PUBLIC COMMENTS

In response to the publication of the advance notice of proposed rulemaking (ANPR) on bunk beds, CPSC received over 400 public comments. A number of these comments were related to CPSC's hazard data, as discussed below.

Risk of Entrapment

Comment:

Many of those who submitted comments expressed support for mandatory rulemaking based on the incident data provided by CPSC staff in the November 1997 briefing package. However, others suggested that the risk of death is extremely small, in view of the 7 to 9 million beds available for use and 10 entrapment deaths estimated to occur each year.

Response:

The CPSC staff's position is that conformance to entrapment requirements (whether mandatory or voluntary) is especially important when considering the vulnerable age group involved in these incidents and the potentially fatal consequences associated with non-conformance.

Deaths in Conventional Beds Versus Bunk Beds

Comment:

CPSC received comments that some entrapment hazards are not unique to bunk beds, in that they also exist for other types of beds.

Response:

Previous staff analysis of data indicated that from January 1990 through July 1995, CPSC received reports of 185 entrapment deaths of children under age 5 on adult beds (excluding bunk beds, water beds, youth beds, hospital beds, and cribs).[3] During the same time period, CPSC received reports of 37 bunk bed entrapment deaths of children under age 5.

---

[3]Memorandum from Sue Cassidy, EHHA, to Terri Rogers, CECA, "Reported Deaths of Children under Age 5 from Entrapment in Adult Beds - January 1990 to July 1995 (PSA No.634)," U.S. Consumer Product Safety Commission (CPSC), August 17, 1995. Of these 185 deaths, 95 (51 percent) involved entrapment between the bed and the wall. In 62 cases, the children were trapped in the bed structure, between the mattress and headboard, footboard, bed frame, or other component of the bed. Entrapment between the bed and other items (furniture, boxes, etc.) was reported in 24 fatalities. Entrapment in portable railings placed on adult beds occurred in four incidents.

It is difficult to make accurate estimates of the relative risk of death for one sleeping environment over another, due to the anecdotal nature of the data and the lack of detailed exposure information (e.g., amount of time children under 5 years spend in conventional beds versus bunk beds). However, it is clear that very young children are at risk of fatal entrapment injury on both adult beds and bunk beds, particularly in areas not protected by guard rails (e.g. between the bed and the wall) or in areas with improper spacing within structural components. CPSC continues to recommend that infants not be placed to sleep in adult beds.

Supervision

Comment:

Several of those commenting indicated that parental supervision is an important issue when considering that almost all of the entrapment deaths involved children under the age of 6 years whose parents had placed them in the top bunk, contrary to warnings that the top bunk is not appropriate for children under age 6.

Response:

Information on the presence or absence of warning labels that would alert parents to the potential dangers of placing a child under age 6 in the top bunk was not available in most cases. Also, in many cases it was not clear whether the child had been placed in the top bunk by the parent/caregiver, was helped up by a sibling, or had climbed up on his or her own. The incident data clearly demonstrate that we cannot rely on parental supervision to address this hazard.

B

United States
CONSUMER PRODUCT SAFETY COMMISSION
Washington, D.C. 20207

MEMORANDUM

DATE: October 8, 1997

TO : John Preston
Engineering Sciences

Through: Alan H. Schoem
Assistant Executive Director
Office of Compliance

Through: Marc J. Schoem
Director
Division of Corrective Actions

FROM : Catherine A. Cumberland
Compliance Officer
Division of Corrective Actions

SUBJECT: Bunk Bed Recalls

Since November 1994, there have been eight recalls of wooden bunk beds that did not conform to the entrapment requirements in the ASTM standard. The recalls involved 41 manufacturers and importers and affected approximately 531,000 bunk beds. The most recent recall involved five companies and affected 16,500 beds.

Bunk Bed Recalls - Entrapment

Recalls:	# Recalled
Press Release 11-3-94 El Rancho Furniture	14,000
Press Release 5-9-95 Backwoods Brill Dover Fine Pine H&H Houston Wood Lexington Mafco Sumter Tech Designs Woodcrest	320,000
Press Release 9-28-95 Catalina	5,000
Press Release 9-28-95 Artwood Brewster D&J Furn. Imports Irons Pine Lee Anderson Nordwins Pine Cone Rustics Room Improvement Bunk Bed Shop	41,000
Press Release 12-14-95 Quality Craft Sentury Royce	31,400
Press Release 11-27-96 Bedder Bunk Oakland Wood P.J. Sleep Shop Stoney Creek Wholesale Importers	100,000
Press Release 04-07-97 Acme Trading Corp. Chicken & Egg Furniture IEM Furniture Lewis Furniture Mfg. Co. Silver Eagle Corp.	3,100

Press Release 09-24-97	16,500
Heartland Furn.	
Temple Pine Furn.	
Rosalco	
Springhill Woodcrafters	
Kidron Woodcraft	
	531,000

C

United States
CONSUMER PRODUCT SAFETY COMMISSION
Washington, DC 20207

MEMORANDUM

DATE: 11/19/98

TO : John Preston, Project Manager
Engineering Sciences

Through: Alan H. Schoem, Assistant Executive Director
Office of Compliance

Through: Lori E. Saltzman, Associate Director, Recalls and Compliance Division, Office of Compliance

FROM : Pamela C. Major, Compliance Officer
Office of Compliance

SUBJECT: Conformance of Bunk Beds with Voluntary Standard ASTM F 1427-96

Background

On January 22, 1998, the Commission published an Advance Notice of Proposed Rulemaking to begin the regulatory proceedings to address the entrapment hazards associated with bunk beds. At that time, the Office of Compliance reported continuing non-conformance with the entrapment requirements of the voluntary standard as indicated by eight recalls, involving 41 manufacturers and importers of approximately 531,000 bunk beds between November 1994 and September 1997. The Office of Compliance supports issuing a mandatory standard to increase conformance and address the deaths and injuries that have occurred on bunk beds. A mandatory standard would: 1) enable the staff to seek civil penalties for violations and deter manufacturers from making non-conforming beds, 2) increase the identification and subsequent recalls of noncomplying beds by state and local officials who are familiar with mandatory standards enforced by CPSC, 3) increase compliance by retailers and distributors who require that products meet applicable federal standards, 4) establish a level playing field within this very competitive industry, and 5) prevent noncomplying beds from entering the United States through cooperative efforts with the United States Customs Service.

This memorandum provides an update on industry non-conformance with the entrapment requirements of the voluntary standard and reiterates the Office of Compliance's support for a mandatory standard to reduce the deaths and injuries associated with bunk beds.

Retail Surveillance Study

Between February 13, 1998, and April 13, 1998, the Office of Compliance conducted limited retail surveillance of bunk beds to determine conformance with the voluntary standard for bunk beds. CPSC Field staff were assigned to visit retail establishments that sold bunk beds to determine whether they present an entrapment hazard. Field personnel were asked to take structural measurements, count the number of guardrails, obtain names and addresses of bunk bed manufacturers, distributors, and importers, and obtain copies of invoices for violative bunk beds showing shipment and receipt of merchandise. They were requested to obtain statements regarding incident reports and the level of knowledge possessed by the retail staff regarding the voluntary standard for bunk beds.

The staffs of the Office of Compliance and Engineering Sciences evaluated the information submitted by the Field staff. There were one hundred and forty-five bunk bed models from 58 manufacturers. Of these, twenty-three firms had at least one model of bunk bed that did not conform to the voluntary standard and six of those firms were repeat violators. The Compliance staff preliminarily determined that bunk beds made by seven of the twenty-three firms presented a substantial product hazard. Two firms were out-of-business and five firms (see attachment A) are currently recalling/retrofitting their non-conforming bunk beds. With respect to the manufacturers' knowledge of the bunk bed voluntary standard, one manufacturer indicated that he thought he was in compliance with the standard and another stated that he had read the voluntary standard, but misinterpreted it.

Sixteen of the twenty-three firms had non-conforming bunk beds that staff believed would not present a substantial risk of death or injury (i.e. the spacing between the end structures of the upper bunk bed was not substantially larger than the spacing requirements of the existing voluntary standard, and a child's head would not become entrapped in this space). The staff sent letters of non-conformance to these firms and asked them to correct future production. When the firms with technical violations were asked if they were aware of the voluntary standard for bunk beds, the majority responded yes. They further claimed that the bunk beds distributed by them were in compliance with all applicable standards. While a number of firms claimed to have knowledge of the voluntary standard for bunk beds, they usually did not have the latest version of the standard. In one case, a manufacturer was relying on the 1988 version of the standard. The standard was last revised in 1996.

Bunk Bed Firms Found on the Internet

Compliance staff recently contacted nine firms advertising for sale on the internet what appeared to be non-conforming bunk beds. Of the nine firms contacted, one firm had moved and left no forwarding address; three manufacturers and three importers were aware of the voluntary standard for bunk beds. One manufacturer was not aware of the standard and had not distributed any bunk beds. One of the above firms stated that the model seen on the internet by CPSC staff was a display model and that all of his bunk beds are sold with the required number of guardrails.

Conclusions

The Office of Compliance believes that the limited retail surveillance and internet search continues to support the need for a mandatory standard. The study indicates that bunk beds that do not conform with the entrapment requirements of the voluntary standard continue to be manufactured and that some manufacturers are either not aware of the voluntary standard or do not understand its requirements. Despite continued surveillance, announcement of recalls, and safety-alert warnings about bunk bed safety, the staff continues to find non-conforming bunk beds.

The industry is highly diverse and fragmented, with differing levels of sophistication relating to product safety. Firms can easily enter and leave the bunk bed manufacturing business. Because of this, we believe firms are more likely to be aware of a mandatory rather than a voluntary standard. Manufacturers are usually aware of, and understand mandatory requirements. We also believe a mandatory standard would enhance the assistance provided by state and local authorities in promoting product safety. Finally, a mandatory standard would provide the authority and the incentive for the U.S. Customs Service to seize, detain, or refuse admission into the United States, bunk beds that violate a mandatory standard issued by the CPSC. Customs has had little interest in expending its resources where a product does not violate a U.S. standard. There is little incentive for them to identify such products if they cannot take immediate enforcement action against the product. This may be critical in view of industry comments that the importation of bunk beds is increasing.

A mandatory standard would prevent non-complying bunk beds from entering the U.S., through a cooperative effort with U.S. Customs Service, and it would enable the staff to seek civil penalties against firms that repeatedly distribute violative bunk beds in U.S. commerce. Further, a mandatory standard would allow state and local officials to assist in identifying bunk beds that do not meet a federal standard and retailers would be able to demand that bunk beds they distribute meet applicable federal standards.

In summary, the Office of Compliance believes that adoption of a mandatory standard is necessary to reduce the current risk of entrapment incident and deaths associated with bunk beds.

Attachments

Bunk Beds
55 Total Retail Inspections
Assigned 2/13/98

ATTACHMENT B

Retailer	Manufacturer(s)	Models of Beds Examined	Conformance	Manufacturer's Knowledge of VS
FOCR				
1. Value City Furniture Springdale, OH	*Dover Furniture Crown Furniture Co. Camas Y. Muebeles, Mexico	Model 55000-1 Model BBTR Model 720	Complies Complies Complies	Yes Unknown Unknown
2. Globe Furniture Loveland, OH	Stanley Co., VA Broyhill, NC ID Kids, IL	Model 146-14 Model 4660 Model BE 9350	Complies Complies Complies	Yes Yes Unknown
3. Grand Furniture Warehouse Hazelwood, MO	Park Hill Furniture Amory, MS	5600,3346,Futon	Complies	Unknown
4. Bedding Liquidators Indianapolis, IN	Woodcrest Mfg. Inc.	2400,2600,2602, 2109	Complies	Yes
5. Kidzz Beds Indianapolis, IN	FISA Furniture Crown Furniture Co.	One wooden One metal	Complies Complies	Unknown Duplicate
6. Turk Furniture, Ottawa, IL	Broyhill	4102-50 & 8101-30	Complies	Duplicate
7. Ken Michaels Furniture Greenfield, WI	Lexington	Compliments #540-195c	Complies	Yes
8. PM Sleep Center Greenfield, WI	Trendwood	Wrangler, High Sierra, Futon Bunk	Complies	Unknown
9. Domus Contemporary Furniture Atlanta, GA	Muurame Finland	Wooden (White)	Complies	Unknown
10. Value City Furniture Store Memphis, TN	Crown Furniture Gardena, CA	BBT FOM-E	Complies	Duplicate
	Dover Furniture Arley, AL	560A & 7500-1	Complies	Duplicate
	Camas Y Muebeles Mexico	700-FB & 720	Complies	Duplicate

11/19/98
*Indicates Repeat Violators
Duplicate Indicates the Manufacturer is Mentioned More Than Once

Retailer	Manufacturer(s)	Models of Beds Examined	Conformance	Manufacturer's Knowledge of VS
11. Heilig-Meyers Furniture Memphis, TN	Camas Y Muebeles Mexico	478209-424570	Complies	Duplicate
	Powell Company Shreveport, LA	461262	Complies	Unknown
	Alabama Custom Woodwork Albertsville, AL	456991	Complies	Unknown
12. Mattress Discount Chicago, IL	Coaster Co. of America	#2250 #2256 #2357	Complies Complies Complies	Duplicate
13. Eggert's Furniture Store Sussex, WI	Stanley Furniture Co.		Complies	Duplicate
14. Bedrooms Plus Sleep Shops Mainville, OH	Club 8 Denmark	Forever	Complies	Unknown
15. Bova-Scandanavian Furn. Co. Cincinnati, OH	Amisco Montreal, Canada	Amisco	Complies	Duplicate
16. Bolton Furniture Co. College Park, GA		2-Metal Bunk Beds	Complies	
17. New Baby Products Atlanta, GA	Amisco, Canada Vermont Precision Childcraft	1-Metal Bunk Bed 1-Wooden Bunk Bed 2-Wooden Bunk Beds	Complies Complies Complies	Duplicate Unknown Unknown
18. Baby+Teen Outlet Store Golden Valley, MN	Crown Furniture Gardena, CA	ALCO BTB90-249 ALCO TTM-300	3-5/8" between guardrails 3-3/4" between guardrails	Duplicate
	Texas Toddler & Teen Wimberly, TX	Toddler Playhouse Bunk	Complies	Unknown
	Primo, Montreal,Canada	A540 b2330-113 Primo A545 Futon Bunk	Complies Complies Complies	Yes
	Ladd Furniture Greensboro, NC	Lea 651-9772-450 Lea 789-963-300	Complies Complies	Yes
	Fashion Bed Group Chicago, IL	Alco Apollo	Complies	Unknown
	Turnda Santa Fe Springs, CA	Alco 2352	Complies	Unknown

etailer	Manufacturer(s)	Models of Beds Examined	Conformance	Manufacturer's Knowledge of VS
9. Room To Grow ontgomery, OH	My Room Co., CA Vermont Precision, VT	Model 2528 & 3510 Model 1102	Complies Complies	Unknown Duplicate
0. Bedtime Bedroom Store elafield, WI	Trendwood Trendwood Trendwood *Catalina	#4710/11 #4720/21 #4705 #423-466T	4-1/4" mattress to top guardrail 3-3/4" mattress to top guardrail Complies 4" mattress to top guardrail	Duplicate Duplicate Duplicate Yes
	Avanti/Raymond Oak Avanti/Raymond Oak Turnda/Fadr Turnda/Fadr Lea Industries	#BBTTO8W #BB0450 #220LK #131K #419-984R	Complies Complies Complies Complies Complies	Duplicate Duplicate Unknown Duplicate Unknown
1. Bedtime Bedroom Store ond du Lac, WI	Trendwood Trendwood Catalina Avanti/Raymond Oak Avanti/Raymond Oak Avanti/Raymond Oak	Model 4710/11 Model 4720/21 Model 423-466T BB05SO BB0450-C BB06MI	4.5" mattress to top guardrail 3-3/4" mattress to guardrail 4" mattress to top of guardrail 3-3/4" between guardrail slats 3-5/8" between guardrail slats 3-5/8" between guardrail slats	Duplicate Duplicate Duplicate Yes Duplicate Duplicate
2. Highland Factory Direct urora, IL	*Fine Pine Fine Pine Belchino, IL Dover Furniture	Model 1060 Model 1180 Out of Business (3 Yrs.) Wagon Wheel	No preset holes for guardrail 5" frame to bottom of guardrail Only one guardrail provided 3-3/4" between guardrail slats	Yes Duplicate Unknown Duplicate
3. The Furniture Barn t. Paul, MN	Martin Furniture St. Paul, MN	1-Metal Bunk Bed	Complies	Unknown
	Top Line St. Paul, MN Was Global	2-Metal Futon Style	Complies	Unknown
1. Marjen of Chicago, Inc. hicago, IL	Fine Pine Fine Pine	#56 (same as 1130) #32 (same as 1060)	6" between guardrail and endrail 6" between guardrail and endrail	Duplicate Duplicate

Retailer	Manufacturer(s)	Models of Beds Examined	Conformance	Manufacturer's Knowledge of VS
FOER				
25. Furniture Factory Outlet Waxhaw, NC	Barn Door Furniture, NC	#556-065	Complies	Unknown
	Barn Door Furniture, NC	#551-065	Complies	Duplicate
	Barn Door Furniture, NC	#551-066	Complies	Duplicate
	Broyhill Furniture, NC	#4110	Complies	Duplicate
	Woodcrest Manufacturing	#C830	Complies	Duplicate
26. Kimbrell's Furniture Rock Hill, SC	Colby Furniture	#105	Complies	Yes
	Transworld Industries	#TM 8017	Complies	Unknown
	Transworld Industries	#TM 8114 Tutor	Complies	Duplicate
27. Sleep World Durham, NC	*Rosalco, Inc.(OOB)	Commodore #3276	4.5" between guardrails tag says it complies	Yes
	New Energy Bedrooms	Stockton Futon Bunk Bed	3/7" between guardrails	Unknown
	Trendwood, Inc., AZ	Wrangler #4710	Complies	Duplicate
28. Workbench Chapel Hill, NC	New England Woodcraft Forest Dale, VT	Spindle Bunk Bed #NE 120	Only one guardrail provided and 8-5/8" opening in endrail	Yes
29. Badcock Home Furnishings North Charleston, SC	Rosalco, Inc. (OOB) Louisville, KY	#3007 & 3027	3-5/8" between guardrails	Duplicate
30. Dixie Furniture Company Charleston, SC	*Coaster Co. of America	#2258R	3-5/8" between guardrails	Yes
	Colby Furniture	#700	Complies	Duplicate
	Dover Furniture	#4000/5300/5010/5500	Complies	Duplicate
31. Falls Kids Room North Coral Springs, FL	Stanley Furniture Co.	Beachcomber	Complies	Duplicate
	Lea Industries	VT Treasures 651-977R	4-1/4" mattress to top of guardrail	Duplicate
	Barn Door Furniture	#556-065-02	4-1/2" mattress to top of guardrail	Duplicate
	*Amisco	#10084-54-13	1-3/4" mattress to top of guardrail	Yes
MASC				
32. Brandywine Furniture, Inc. Wilmington, DE	World Imports, Ltd.	#646	Complies	Yes
33. Chiropractic Sleep Sets d/b/a Mary's Sale Furniture Wilmington, DE	Colby	#103	Complies	Duplicate
	Woodcrest	#S-2000 Scalloped	Complies	Yes
34. Diamond Furniture Co. Philadelphia, PA	Dover Furniture Arley, AL	5800 & 6000	Complies	Duplicate
35. Mattress Palace Westminster, MD	IEM Furniture Co. Commerce, CA	#02-30397	Complies	No
36. Montgomery Ward Westminster, MD	*L. Powell Co., Inc. Culver City, CA	#66-32757	4-1/2" mattress to top of guardrail	Yes

Retailer	Manufacturer(s)	Models of Beds Examined	Conformance	Manufacturer's Knowledge of VS
37. Mattress Warehouse Westminster, MD	Rosalco or Largo	No Model No.	4" mattress to top of guardrail	Duplicate
38. Rockaway Bedding Center Wilmington, DE	Fashion Bed Group Chicago, IL	B81660	Complies	Duplicate
39. Snyder Furniture Co. Philadelphia, PA	Brill Manufacturing Co. Ludington, MI	845	Complies	Yes
40. Warehouse II Philadelphia, PA	*Home Line Ind., Phil., PA *World Imports, Phil., PA	S275 346	4.5" mattress to top of guardrail 3" mattress to top of guardrail	Yes Duplicate
FOWR				
41. California Furniture Fullerton, CA	Crown Furniture Gardena, CA	Classic Twin Bunk Bed RT-90/1276	Complies	Duplicate
42. Central Furniture, Chino, CA	Poundex Associates	F9007 & F9008	Complies	Yes
43. International Furniture Oakland, CA	Coaster Co. of America Oakland, CA	Metal	Complies	Duplicate
44. Norwalk Furniture Norwalk, CA	*Artwood Fine Furn., CA *Nordwins Corp. CA Triangle Mfg. Yues Mfg. Avanti/Raymond Oak Bedline Mfg.	#5546 #3162S Titan & #8800 Metal Bed BB15FTO Nevada C-Bed	Lacks Warning Label Lacks Warning Label Complies Complies Complies Complies	Yes Yes Unknown Unknown Duplicate Yes
45. PO Boy's Mattress... Garland, TX	Dreamline Mfg. Inc. AR Coaster Co. of America Poundex Furniture	#71, Double Wagon Wheel #2258K-915X69JC #F9008, Futon	Complies Complies Complies	Duplicate Duplicate Yes
46. First Furniture Discount Anaheim, CA	J.I.M. Manufacturing Los Angeles, CA	Spindle (Maple) #2256W	Only one guardrail provided Lacks Warning Label	No
47. Tower Furniture Norwalk, CA	Triangle, CA West Coast	#5600 #521	Complies Complies	Duplicate Unknown
48. The Mattress Firm Lewisville, TX	L. Powell Co., Inc. Culver City, CA	Terminator Billy Bob Futon Fence Post	Complies Complies Complies	Duplicate

etailer	Manufacturer(s)	Models of Beds Examined	Conformance	Manufacturer's Knowledge of VS
9. United Discount Furniture allego, CA	*IEM City of Commerce, CA	#2121D	4-1/2" mattress to top of guardrail 9"x9-3/4" opening in endrail	Duplicate
0. U-Save Discount Furniture	IEM City of Commerce, CA	#2121N	3-3/4" frame to bottom of guardrail 4" mattress to top of guardrail 9-3/4"x9" opening in endrail	Duplicate
1. Distressed Furniture, ichmond, CA	*Wholesale Imports Los Angeles, CA	#03370	Only one guardrail 11" frame to bottom of guardrail 4" mattress to top of guardrail	Yes
	AGA Warehouse, CA	#4702 & 47012	Complies	Yes
2. Furniture City an Pablo, CA	Gregorio & Nancy Magna, San Pablo, CA	None - Used	Guardrail not assembled Will sell as twin beds	No
	Dover Furn., Arley, AL	#7500 & 4000	Complies	Duplicate
	Coaster Co. of America	None	Complies	Duplicate
3. Unclaimed Furniture ammond, CA	*Dreamline Mfg., Co.	#800	4" Mattress to top of guardrail	Yes
	Dreamline Mfg., Co.	#71-71	4-1/4" space between guardrails	Duplicate
	Fine Pine	#1130	5-1/4" space between guardrails & 3-7/8" between slats in endrail	Duplicate
	Fine Pine	#1010	5-1/2" space between guardrails	Duplicate
	Fine Pine	#1149	Complies	Duplicate
	Coaster Co. of America	#2253	3-3/4" in endrails	Duplicate
4. W-3 Holding Company /b/a The Baby Place	Butler Woodcrafter, VA	#B5201, B5103	Complies	Unknown
	Colby Furniture, AL	#107, 700, 0706	Duplicate	Unknown
	Cargo Company, TX	#948	Complies	Unknown
	Ragazzi, Canada	#515	Complies	Unknown
5. Factory Furniture Store cKinney, TX	Vantage Furniture, TX	#WM 2121D	3-7/8" between guardrail and frame	Unknown
	MAFCO Furniture, TX	#T-45	Complies	Unknown
	Colby Furniture, AL	#103	Duplicate	

D

United States
CONSUMER PRODUCT SAFETY COMMISSION
Washington, D.C. 20207

MEMORANDUM

DATE: December 7, 1998

TO : The File
Through : William H. King, Acting AED, ES
FROM : John D. Preston, ES

SUBJECT : Proposed Mandatory Rule for Bunk Beds

Attached is a draft of requirements and tests for a staff proposed mandatory rule to address entrapment hazards associated with bunk beds.

For the most part the requirements and tests are the same as those in the Standard Consumer Safety Specification for Bunk Beds, ASTM F1427-96 (ASTM standard). However, to address three deaths that occurred on beds that appeared to conform to the ASTM standard, staff is proposing two changes. A discussion of these changes follows.

Continuous Guardrail - Paragraph 1.1.1 of the draft proposed rule requires the guardrail on one side of the upper bunk to be continuous from the head to the foot end of the bed. The ASTM standard permits the upper bunk side guardrails to terminate before reaching the end structures providing that the gap between the end of the guardrail and bed end structure is no greater than 15 inches. Two children are known to have become fatally entrapped between a bed and wall when they slide feet-first into such a gap. Eliminating such gaps on the wall side of a bunk bed should prevent future incidents of this type. According to EC, industry sources have estimated that 50-75 percent of bunk beds currently in use have guardrails with gaps between the end of the rail and the bed's end structures. For future production, manufacturers employing such guardrail designs would have to rework their beds to eliminate these gaps. The cost of the material to extend one guardrail an additional 30 inches (2 x 15 inches) is believed to be less than the estimated benefits.

Lower Bunk End Structure - The ASTM standard contains a requirement addressing entrapment in lower bunk end structures but restricts it to that portion of the end structure that extend from the level of the lower bunk mattress foundation support system to a level that is 9 inches above the top surface of the lower bunk mattress. Staff is aware of a fatal entrapment incident in which a child's head became entrapped in an opening between the underside of the upper bunk mattress foundation and a structural member that was about 3¾

inches below the foundation. To prevent future incidents of this type, the draft proposed rule uses the same test procedure as the ASTM standard but extends the scope of the requirement to cover any portion of the bed end structure that is above the level of the top of the lower bunk foundation and below the level of the underside of the upper bunk foundation. Some bunk beds have end structures that will require redesign to meet the proposed requirement.

However, other than the cost of the redesign, the requirement does not incur cost due to added materials. For some bunk beds, material may have to be removed to enlarge existing openings. When amortized over the total production, the cost per bed of the redesign is likely to be small.

The attached proposed requirements address incidents of fatal entrapment on the top bunk that were associated with the guardrail (27 fatalities), bed/wall (9 fatalities) and the end structure (1 fatality). The requirements also address the three incidents associated with fatal entrapment in the end structure of the lower bunk. ES believes that if bunk beds are manufactured to comply with the proposed requirements and are assembled correctly, it is very unlikely that fatalities will occur because of entrapment in guardrails, end structures or between the upper bunk and a wall. In other words, the draft proposed mandatory rule is expected to be highly effective in preventing entrapment fatalities in those parts of the bed that its requirements address.

Attachment

DRAFT PROPOSED REQUIREMENTS AND TESTS FOR BUNK BED NPR

DEFINITIONS

Bunk Bed - For the purpose of this rule, a bunk bed (hereinafter referred to as a bed) is defined as a bed sold for residential use in which the underside of the foundation is over 30 inches (760 mm) from the floor. The rule does not apply to bunk beds specifically made and sold only for institutional use by adults (e.g., in prisons, military facilities, dormitories, etc.).

Guardrail - A rail or guard on a side of the upper bunk to prevent a sleeping occupant from falling or rolling out.

Foundation - The base or support on which a mattress rests.

Bed End Structure - An upright unit at the head and foot of the bed to which the side rails attach.

REQUIREMENTS

1. Guardrails.

1.1 Any bed in which the underside of the mattress foundation is over 30 inches (760 mm) from the floor shall provide at least two guardrails, at least one for attachment to each side.

1.1.1 One guardrail shall be continuous between each of the bed end structures. The other guardrail may terminate before reaching the bed's end structures, providing there is no more than 15 inches (380 mm) between either end of the guardrail and the bed end structures in the same plane.

1.1.1.1 For bunk beds designed to have a ladder attached to one side of the bed, the continuous guardrail shall be on the opposite side.

1.2 Guardrails shall be attached so that they cannot be removed without the intentional release of a fastening device or without applying forces sequentially in different directions.

1.3 The upper edge of the guardrails shall be no less than 5 inches (130 mm) above the top surface of the mattress when a mattress that is the maximum thickness specified by the manufacturer's instructions is on the bed.

1.4 With no mattress on the bed, there shall be no openings in the rigid structure below the lower edge of the uppermost member of the guardrail that would permit passage of the wedge block shown in Fig. 1 when tested in accordance with the procedure at 3.1

2. Bed End Structures.

2.1 The upper edge of the upper bunk end structures shall be at least 5 inches (130 mm) above the top surface of the mattress for at least 50 percent of the distance between the two posts at the head and foot of the upper bunk when a mattress and foundation of a thickness that is the maximum specified by the manufacturer's instructions is on the bed.

2.2 With no mattress on the bed, there shall be no openings in the rigid end structures above the foundation of the upper bunk that will permit the free passage of the wedge block shown in Fig. 1 when tested in accordance with the procedure at 3.2.

2.3 When tested in accordance with 3.3, there shall be no openings in the end structures between the underside of the foundation of the upper bunk and upper side of the foundation of the lower bunk that will permit the free passage of the wedge block shown in Fig. 1, unless the openings are large enough to permit the free passage of a 9-inch (230 mm) diameter rigid sphere.

3. TEST METHODS

3.1 Guardrails (see 1.4) - Without a mattress or foundation on the upper bunk, place the wedge block shown in Fig. 1 into any opening in the rigid bed structure below the lower edge of the uppermost member of the guard rail, tapered side first, and in the most adverse orientation (i.e. major axis of block parallel to major axis of opening), and gradually apply a 33-lbf (147-N) force in a direction perpendicular to the plane of the opening. Sustain the force for 1 minute.

3.2 Upper Bunk End Structure (see 2.2) - Without a mattress or foundation on the upper bunk, place the wedge block shown in Fig. 1 into any opening, tapered side first, and in the most adverse orientation. Determine if the wedge block can pass freely through the opening.

3.3 Lower Bunk End Structure (see 2.3) - Without a mattress or foundation on the lower bunk, place the wedge block shown in Fig. 1, tapered side first, into any opening in the lower bunk end structure in the most adverse orientation. Determine whether the wedge block can pass freely through the opening. If the wedge block passes freely through the opening, determine whether a 9-inch (230-mm) diameter rigid sphere can pass freely through the opening.

3.3.1 With the manufacturer's recommended maximum thickness mattress and foundation in place, repeat the test in 3.3.

4. MARKING AND LABELING

4.1 There shall be a permanent label or marking on each bed stating the name and address (city, state, and zip code) of the manufacturer, distributor, or seller; the model number; and the month and year of manufacture.

4.2 The following warning label shall be permanently attached to the inside of an upper bunk bed end structure in a location that cannot be covered by the bedding but that may be covered by the placement of a pillow.

! WARNING
To help prevent serious or fatal injuries from entrapment or falls: • Never allow a child under 6 years on upper bunk • Use only a mattress that is __ inches long and __ inches wide on upper bunk • Ensure thickness of mattress and foundation combined does not exceed __ inches and that mattress surface is at least 5 inches below upper edge of guardrails DO NOT REMOVE THIS LABEL

5. Instructions

5.1 Instructions shall accompany each bunk bed set, and shall include the following information:

5.1.1 Size of mattress and foundation - The length and width of the intended mattress and foundation shall be clearly stated, either numerically or in conventional terms such as twin size, twin extra-long, etc. In addition, the maximum thickness of the mattress and foundation required for compliance with 1.3 and 2.3 shall be stated.

5.2 Safety Warnings - The instructions shall provide the following safety warnings:

- Do not allow children under 6 years of age to use the upper bunk
- Use guardrails on both sides of the upper bunk
- Prohibit horseplay on or under beds
- Prohibit more than one person on upper bunk
- Use ladder for entering or leaving upper bunk

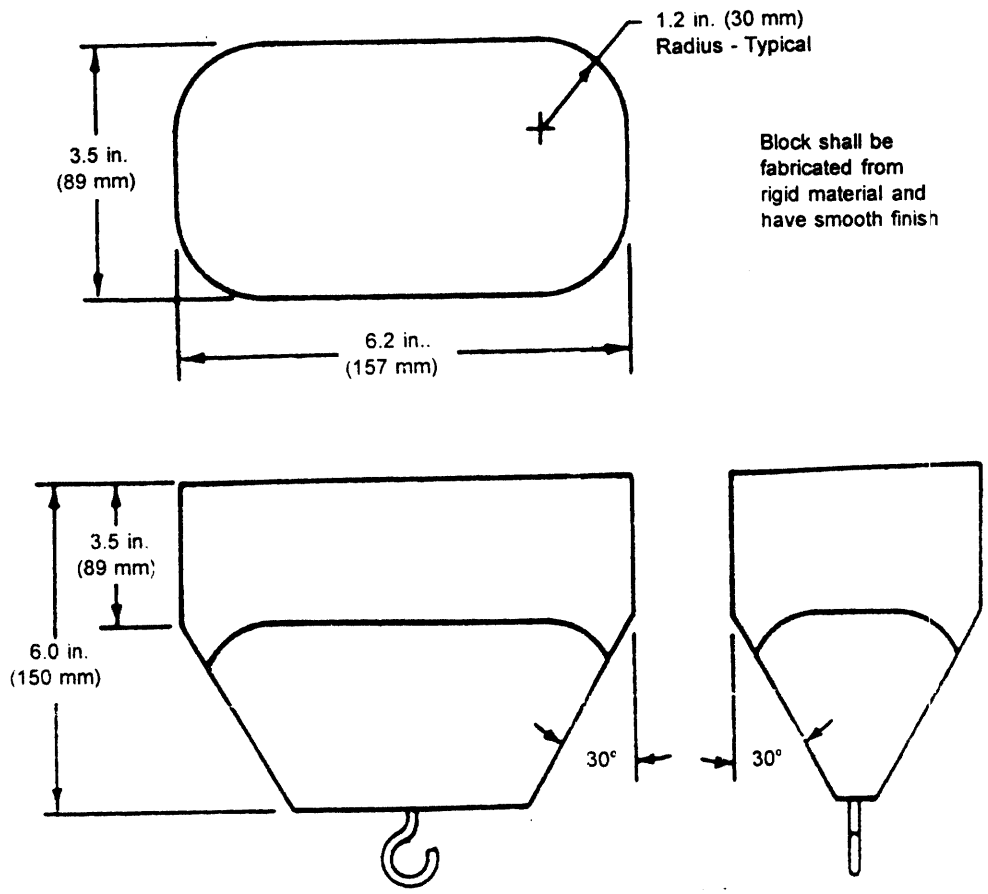

Fig. 1 Wedge Block for Tests in 3.1, 3.2 and 3.3

E

United States
CONSUMER PRODUCT SAFETY COMMISSION
Washington, D.C. 20207

MEMORANDUM

DATE: July 30, 1998

TO : John Preston, ESME, Project Manager

FROM : Celestine T. Kiss, ESHF ctk

SUBJECT: Human Factors (HF) Response to ANPR Comments on Bunk Beds.

The U.S. Consumer Product Safety Commission (CPSC) published an Advanced Notice of Proposed Rule (ANPR) for Bunk Beds in the Federal Register. This memorandum provides Human Factors' response to the public's ANPR response comments. The numbers in parentheses refer to the comment number assigned by the Office of the Secretary to the respondent.

Issue Warning Label Effectiveness (CH98-1-1a, 4, 5)

The respondents expressed concern that the consumers were not receiving adequate information to prevent injury and death.

Discussion

The first Bunk Bed Safety Guideline became effective January 1, 1979. One of the sections of the guideline was a cautionary label advising consumers that the top bunk was for use by a child over 6 years of age. This label was to be posted on and not removed from the head- or foot-board of the top bunk. The same message was included in the next two revisions (1981 & 1986). Then, in 1988, the label was changed to a warning and included a statement of the hazard (e.g., "To help prevent serious injuries from entrapment or falls...") and a list of "to-do" items, including item number 4 which reads -- "Prohibit children under 6 years on upper bunk." In the 1992 revision, the prohibitive statement was moved to first on the list. In the current voluntary standard, the prohibitive statement is again first and has been changed from "Prohibit..." to "Never allow..."

Despite almost 20 years of hazard labeling on the bunk beds, consumers continue to place children under 6 years of age on the top bunk.

It is clear that, in this case, a warning label is not adequate to address the hazard. Consumers either do not understand the hazard or evaluate it and decided they are not at risk and, therefore ignore the warning.

Recommendation

Because there are consumers who do read and heed the label, the label should continue to be placed on and not removed from the head- or foot-board. But, for those consumers who ignore the warning, every effort should be made to design potential entrapment hazards out of the bed before it gets to the consumer.

Issue Consumer Behavior (CH98-1-3, 5, 7)

Several respondents stated that the hazard with bunk beds was a result of the way in which consumers assemble them, which mattress they chose, and the age of the child who is allowed on the top bunk. One respondent stated "contrary both to common sense and to the advice and warnings that accompany the beds" consumers place children under 6 years of age on the top bunk.

Discussion

The fact that consumers can put the bunk bed together incorrectly is a reflection of the inadequacy on the part of the manufacturer to provide clear and accurate information upon which consumers can rely. The installation instructions and bed need to be designed so that consumers are able to only assemble the bed in the correct manner. For example, providing pre-drilled holes that indicate exactly where side-guard rails are supposed to be attached, rather than simply stating "attach guard rail".

Based on the number of injuries and deaths involving children under 6 years of age on the top bed of bunk beds, it is clearly not "common sense" to some consumers to prevent children under 6 years from being on the top bunk. According a Commission's In-depth Investigation (910612HCC0246), the consumer stated she had been placing the victim and his twin brother on the top bunk to sleep because the lower bunk did not have a guard rail and the boys kept falling out of bed while sleeping. The upper bunk had a guard rail.

Research shows that when warnings and advice contradicted the "knowledge" of the consumer, the consumer may chose to ignore the warning.[1] In this type of situation, research indicates it is easier to change the product than to change the user.[2]

Recommendation

Consumers clearly have entrenched attitudes and behaviors about the use of bunk beds. Psychological research is consistent in finding attitudes resistant to significant change. Attempting to educate and change a consumer's attitudes about a product that the consumer has assessed to be non-hazardous is very difficult. Therefore, the product itself must be changed so that it does not present a hazard for the consumer. Manufacturers must provide clear and precise instructions that enable the consumer to assemble the bed in only one way -- the right way. All entrapment hazards associated with spacing need to be eliminated.

---

[1]T.J. Ayres, M.M. Gross, C.T. Wood, D.P. Horst, R.R. Beyer, and J.N. Robinson, (1989). "What is a warning and when will it work?" Human Factors and Ergonomics Society pp. 426-430.

[2]D.P. Horst, G.E. McCarthy, J.N. Robinson, R.L. McCarthy, and S. Krumm-Scott (1986) "Safety information presentation: Factors influencing the potential for changing behavior" Human Factors and Ergonomics Society, pp. 111-115.

F

United States
CONSUMER PRODUCT SAFETY COMMISSION
Washington, D.C. 20207

MEMORANDUM

DATE: December 14, 1998

TO : John D. Preston, ESME
Project Manager, Bunk Beds

Through: Warren J. Prunella, Associate Executive Director
for Economic Analysis WJP

FROM : Terrance R. Karels, EC TRK

SUBJECT: Preliminary Regulatory Analysis -- Bunk Beds

Attached is the Preliminary Regulatory Analysis of the proposed standard for bunk beds, as required under Section 9(c) of the Consumer Product Safety Act. A preliminary environmental assessment, required under the National Environmental Policy Act, is also included.

PROPOSED RULE FOR BUNK BEDS
Preliminary Regulatory Analysis

Terrance R. Karels
Directorate for Economic Analysis
U.S. Consumer Product Safety Commission
December 14, 1998

INTRODUCTION

The Consumer Product Safety Commission (CPSC) is considering a mandatory safety rule for bunk beds. As stated in the Advance Notice of Proposed Rulemaking (January 22, 1998), this proposed rule addresses the risk of head entrapment deaths to children in bunk beds. There has been an average of 10 bunk bed entrapment fatalities annually since 1990.

The proposed rule would be published under the authority of the Consumer Product Safety Act (CPSA), which requires the Commission to publish a preliminary regulatory analysis of the proposed rule and reasonable alternatives. This report provides a summary of the requirements of the proposed rule, background product and market information and, as required by the CPSA, a discussion of the likely benefits and costs of the proposed rule, as well as reasonable alternatives to the proposal.

In addition to the requirements of the CPSA, the Commission is required by the Regulatory Flexibility Act of 1980 (RFA) to address and give particular attention to the economic effects of the proposed rule on small entities. The Commission also is required by the National Environmental Policy Act (NEPA) to consider the potential environmental impact of the proposed rule. This report addresses both the RFA and the NEPA requirements.

REQUIREMENTS OF THE PROPOSED RULE

Epidemiological data indicate that there are about 10 entrapment deaths annually involving bunk beds, including on the wall-side of the top bunks and in the lower bunk end structures. There is an existing voluntary standard for bunk beds which addresses both of these entrapment scenarios. The standard requires that a second guardrail be provided for the wall-side top bunk, and forbids openings in the end structures of the lower bunk in dimensions which would allow the body (but not the head) of a child to pass through. The Commission is considering whether to adopt the voluntary standard as a mandatory one.

If made mandatory, the standard would require that manufacturers include two guard rails for the top bunk, but would affect only those manufacturers not meeting the voluntary standard. It may also require some firms to reconfigure the bottom bunk end structures, and specify test methods.

The proposed rule would require that all bunk beds that enter commerce one year after publication of the rule would meet the entrapment provisions.

PRODUCT AND MARKET INFORMATION

Bunk beds are essentially stackable twin beds, constructed with wood or metal frames. Some models now incorporate a lower double bed with a twin upper. The retail prices of these products range from $100 to $700; manufacturers estimate the average retail price of a bunk bed at $300.

The American Furniture Manufacturers Association (AFMA) represents manufacturers of bunk beds. Forty firms, either AFMA members or members of the existing ASTM bunk bed subcommittee, account for about 75-80 percent of total annual bunk bed sales, according to AFMA. In 1997, staff was aware of 120 manufacturers of bunk beds, including the 40 AFMA or ASTM members. Staff is now aware of 160 firms manufacturing bunk beds. The share of market accounted for by the other non-AFMA/ASTM firms is not known, but is believed to account for almost all of the remaining 20-25 percent of the market. Additionally, there are likely other unidentified firms producing small quantities of bunk beds.

Industry sources estimate that about 500,000 bunk beds are sold annually, and that the expected useful life of bunk beds is 13 to 17 years. Based on the CPSC's Product Population Model (a computer model which estimates the number of a product in use at a given time), there may be some 7-9 million bunk beds available for use; this includes beds not in active use and those which may not be stacked.

Historically, imports have accounted for only a small part of the U.S. market for bunk beds. This is due in large part to the shipping cost relative to price. Since bunk beds can be shipped unassembled and mated to U.S.- made mattresses, there is a small number of imported bunk beds sold in the United States. AFMA spokesmen report that there are no data on the extent of such imports; however, AFMA indicated that imports of bunk beds by its members appear to be increasing.

Conformance with Existing Voluntary Standard

Compliance staff (CA) has reported that all 40 firms that are either members of AFMA or which have ASTM standing produce bunk beds that are in conformance with the existing voluntary standard. CA staff has examined the products of and/or contacted the remaining firms known to be producing bunk beds. CA staff report that after taking a number of corrective actions, including recalls, all of the beds produced by these firms were in conformance.

There are no known agency or publicly available historical data describing the extent of conformance with the voluntary standard since 1979 (the initial year industry guidelines were

available). However, based on its knowledge of industry practices, Engineering Sciences staff (ES) estimates that roughly 50 percent of production from 1979 to 1986 was in conformance with upper bunk entrapment requirements. This rough estimate is based in part on the fact that, although the guidelines were available during this period, even some firms represented on the ASTM standards committee did not follow them.

The industry publicized the availability of guidelines in 1986 and CPSC staff became involved in the standards process. ES and CA staff believe that the publication of these guidelines and staff involvement raised industry awareness of the existence and importance of the voluntary standard and estimate that conformance may have increased to roughly 75 percent of production from 1986 to 1992. In 1992, ASTM published its bunk bed standard, and CA became active in monitoring products for conformance to that standard. ES staff estimate that 90 percent (or more) of production since 1992 may conform to the ASTM standard.

Many of the bunk beds produced in the early to mid-1980s, which may not have been in conformance to the standard, have reached the end of their average expected useful lives and are probably no longer in use. Therefore, although we cannot precisely estimate what proportion of bunk beds in current use conforms to the standard, the percentage likely falls between 50 and 90 percent. Assuming a "conforming" range between these extremes, on the order of from 70 to 85 percent, some 15 to 30 percent of bunk beds in use since the early 1990s do not conform to the ASTM voluntary standard for upper bunk entrapment.

Potential Costs of Proposed Rule

The costs associated with the proposal would include the cost of compliance for any firms not now conforming to the voluntary standard, and the cost of any Commission-added requirements in the final mandatory rule. In order to provide some preliminary information regarding these costs, we contacted four manufacturers that had modified production to conform to the standard.

Two of these manufacturers stated that the cost of additional materials needed to address entrapment was nominal compared to overall materials costs, and that redesign costs would not be significant on a per-unit basis. They estimated that the addition of a second guardrail to the top bunk added $15-20 to the retail price of a bed. The other manufacturers, marketing bunk beds in the "mid to upper" price range, estimated that the addition of the second guardrail resulted in a $30-40 per bed increase in the retail price. Thus, the overall retail price increase ranges from $15 to $40 per bed.

The mandatory rule would also result in costs associated with modification of some bottom bunk end structures. These are associated with redesign so that the structures not allow the free passage of a wedge block (approximating the size of a child's body) unless it also allows the free passage of a 9-inch sphere (approximating the head). The potential cost of reconfiguring the bunk end structures is unknown, since the units which would require such rework have not been identified. Only those firms that do not conform to the voluntary standard would be affected; however, if these one-time design costs are amortized over the entire production run for these bunks, the estimated costs are likely to be small.

Potential Benefits of Proposed Rule

The proposed rule is intended to address the risk of entrapment deaths of children from bunk beds. The potential benefits would be a decrease in these entrapment deaths. Avoidance of other incidents (such as near-entrapments) do not contribute significantly to the monetized benefits since, according to Epidemiology staff, they produce no or only minor injuries. All of the known deaths involved children under the age of seven.

The expected societal costs of bunk bed entrapment deaths represent the potential benefits of preventing them. Staff reported that there were 39 entrapment deaths associated with the top bunk reported to the CPSC from January, 1990 to May, 1998. Based on review of the circumstances of the reports, Engineering and Epidemiology staff concluded that the voluntary standard would have addressed at least 37 of the 39 top bunk entrapment deaths. Additionally, staff concluded that the standard would have addressed 2 of the 3 bottom bunk entrapment deaths. Altogether, staff believes that the voluntary standard would have addressed 68 percent of reported fatalities due to entrapment in all locations (39 ÷ 57). Nationally, Epidemiology staff projected that about 10 (95% confidence interval, 6.0 to 14.4) bunk bed entrapment fatalities occurred annually since 1990. Therefore, the voluntary standard could have addressed an estimated 7 deaths (10 x .68) per year.

In order to determine the expected benefits of the proposed rule, it is necessary to know the risk of death through bunk bed entrapment, defined as "deaths per nonconforming bunk bed", and the expected reduction in risk. The risk level computation requires information on the number of bunk beds that were in use over the period of reported fatalities. The risk reduction factor depends on the effectiveness level of the standard.

The midpoint of the estimated number of bunk beds in use is 8 million units. If 15-30 percent of bunk beds that were in use

did not conform to the standard, then fatalities may be assumed to have been spread over an estimated 1.2 to 2.4 million nonconforming beds (.15 to .30 x 8 million). Therefore, the risk of a fatal entrapment that a voluntary standard could address is from 2.9 to 5.8 deaths per million nonconforming beds (7 ÷ 2.4 to 7 ÷ 1.2). At an assumed societal cost of $5 million per death, the annual societal value of averting all such fatalities is from about $15 to $30 per bed per year (3 deaths per million nonconforming beds x $5 million, at the lower end of the range, to 6 deaths per million beds x $5 million, at the upper end). If we assume a useful life of 15 years for a bunk bed and a discount rate of 3%, the estimated *present value* of averting the entrapment fatalities addressed by the voluntary standard ranges from about $175 to $350 per bed. This is the total potential benefit of averting the risk of death from a nonconforming bed over its useful life.

Comparison of Costs and Benefits

The expected net benefits of the standard depend upon the costs of the standard ($15 to $40), the societal costs of the deaths addressed by the standard ($175 to $350), and the effectiveness of the standard in reducing deaths. If the standard were fully effective (i.e., if it prevents all of the deaths addressed), the benefits would be much higher than the costs of implementing the standard. In fact, the net benefits per bed, over its expected product life, would range from a low of $135 ($175 - $40) to a high of $335 ($350 - $15).

The standard would not have to be fully effective, however, for the standard to be justified from a regulatory standpoint. Given the estimated range of costs and benefits described above, the standard need to be no more than 23 percent effective for the benefits to be at least as high as the costs (i.e., $40 ÷ $175). Engineering staff has concluded that, of the entrapment incidents addressed with the requirements of the proposed standard, all would have been averted if those beds were in conformance.

As discussed below, staff is also aware of entrapment deaths on the top bunk and bottom bunk, in scenarios not addressed by the voluntary standard. Staff is recommending that the mandatory standard include a continuous guardrail for the wall side of the top rail, and modifications of the bottom bunk structure to address these deaths. ES staff concluded that these modifications would have averted these remaining entrapment deaths.

If we assume a specific level of effectiveness and know the number of bunk beds that would be brought into compliance with a mandatory standard, we can estimate the aggregate expected net benefits. The number of nonconforming bunk beds produced

annually is not known. Industry sources estimated that there may be as many as 50,000 nonconforming units produced each year. If this estimate is used, the net benefits to society of the proposed rule (if fully effective and all non-conforming beds were made to comply) would be about $6.75 to $16.75 million per year (50,000 x $135 to 50,000 x $335).

If the standard is less than 100 percent effective, or if all nonconforming beds were not made to comply, the aggregate expected benefits would be proportionately less. For example, if the standard is 90 percent effective in preventing deaths and 80 percent of the nonconforming beds were made to comply, the benefits to society of the proposed rule would be $4.9 million ($6.75 million x .9 x .8) to $12.1 million ($16.75 million x .9 x .8).

Alternatively, in its 1998 surveillance activity, Compliance staff was able to identify five firms that produced bunk beds which presented these entrapment hazards. In total, these firms reportedly sold some 6,250 bunk beds annually. If this is the extent of production of nonconforming bunk beds, the total net annual benefit to society of the proposed standard would be $844,000 (6,250 x $135) to about $2.1 million (6,250 x $335) if the standard eliminates the hazard. It appears that the likely number of nonconforming beds produced annually would be somewhere between the industry's estimate and Compliance's findings. Thus, based on a range of about 6,000 to 50,000 nonconforming beds produced annually, the aggregate net benefits of the proposed rule (if fully effective) could range from about $1 million to $17 million per year.

ADDITIONAL REQUIREMENTS

Continuous Guard Rail

Staff is considering an additional requirement to the voluntary standard, calling for a continuous guardrail end to end on the wall side of the bed; this contrasts with the current voluntary standard, which allows a 15-inch gap at either end of the wall side guardrail. The continuous guardrail would address two entrapment deaths which occurred in the area of the 15-inch gap over the 101-month study period of January 1990 through May 1998, or about .24 deaths per year (2 ÷ 8.4 years). The continuous rail would only address the risk of entrapment death when a bunk bed is against a wall. If the bunk bed was otherwise located (i.e., with open space on both sides of the length of the bunk bed), the risk of entrapment is eliminated.

Trade sources indicated that perhaps 50-75 percent of all bunk beds in use during the January 1990-May 1998 period contained this gap; if this percentage range is used, then some 4-

6 million beds with the gap would have been in use for each of the years in the study period. Consequently, over that period of time, there were from 0.04 deaths per million nonconforming beds per year (0.24 ÷ 6) to 0.06 deaths per million nonconforming beds per year (0.24 ÷ 4). At an assumed cost of $5 million per death, the annual benefits to society of averting these deaths would be $0.20 per bed (0.04 deaths per million nonconforming beds x $5 million) to $0.30 per bed (0.06 deaths per million nonconforming beds x $5 million). If we assume an average useful life of 15 years and a 3 percent discount rate, the estimated present value of this effort would be $2.40 to $3.50 per bed over its life.

The cost of eliminating the allowance of a 15-inch gap in the guardrail for the top wall side of the bunk bed is unknown. However, ES staff reported that the cost of materials to extend one guardrail an additional 30 inches (for those bunk beds which incorporated a 15 inch gap on both sides of the top rail) would be less than the estimated benefits ($2.40 to $3.50 per bed).

Bottom Bunk Entrapment

Staff is aware of one death over the past eight years involving entrapment in the bottom bunk, occurring in a scenario not currently addressed by the voluntary standard. The staff recommends requirements to address this death. Cost estimates have not been made. However, ES staff expects these costs to be design-related only, and small. Indeed, for some bunk beds, materials costs may decrease since less materials may be required to comply with these requirements.

The small additional costs from any wall guardrail and end structure modifications are not expected to affect the market for bunk beds, either alone or added to the costs of compliance to ASTM's provision.

ALTERNATIVES

Defer to Voluntary Standard

The Commission could decide that a mandatory regulation is not necessary, in that the current standard addresses about 70 percent of reported entrapment hazards over the past eight years. Current conformance to the standard has been estimated by staff at 90 percent or more of production. If there is no mandatory action, then no additional deaths would be averted involving future nonconforming bunk beds.

Third Party Certification

The Commission may decide to defer to the voluntary standard, and encourage third-party testing to the ASTM standard. One commenter suggested that bunk beds which conform to the voluntary standard would be so labeled. Consumers could then compare conforming and nonconforming beds at the point of purchase and make their purchase decisions with this safety information in mind.

Effects on Small Entities

The Commission is required by the Regulatory Flexibility Act of 1980 (RFA) to address and give particular attention to the economic effects of the proposed rule on small businesses.

The precise number of firms manufacturing bunk beds is not now known. The Commission staff has identified 160 firms that have produced bunk beds: these were identified through the trade association, national and regional trade shows, industry contacts, the Internet, and retail inspections. Small Business Administration guidelines classify firms in the furniture production industry as small if they have less than 500 employees, are independently owned, and are not dominant in the field; thus, most of these firms would be classified as small businesses. It is likely that there are additional firms which produce relatively small numbers of bunk beds annually. These remaining producers are also likely to be small businesses.

Even though there is a substantial number of small firms, staff does not expect that there will be a significant effect on these firms. As noted earlier, all of the 160 firms identified by staff are already in conformance to the existing voluntary standard. Moreover, it is unlikely that the effects on any firms which have not been identified and that do not currently conform would be significant. For firms not conforming, the requirements are expected to result in increased retail prices of about 7 to 13 percent, which likely would be passed on to consumers.

The mandatory standard would not require third-party testing. It is anticipated that the firms would self-certify that their products were in compliance with the mandatory standard. There would be no reporting or recordkeeping requirements under the mandatory standard. Staff is unaware of any federal rules with which the proposal would duplicate, overlap or conflict.

PRELIMINARY ENVIRONMENTAL ASSESSMENT

The proposed rule would not cause manufacturers to dispose of existing materials of construction or existing packaging. Inventories of finished products (including those at retail) would not be rendered unsalable, since the proposed rule would apply to units produced after the effective date. Similarly, manufacturer inventories would not require retrofit in order to comply with the proposed rule.

The proposed rule is not expected to have a significant effect on the materials used in the production and packaging of subject bunk beds, or in the number of units discarded after the rule. Therefore, no significant environmental effects would result from the proposed mandatory rule for bunk beds.