Lennox Industries Inc.
7920 Belt Line Road
Dallas, Texas 76053

January 8 & 20, 1987
Zannie E. Weaver
Investigator

THE INFORMATION CONTAINED IN THIS REPORT IS CONSIDERED CONFIDENTIAL BY MANAGEMENT

SUMMARY OF FINDINGS:

This limited Section 15 inspection was requested by CACA as part of STI # 87-033. The STI focused on inspecting manufacturers of high efficiency condensing style furnaces. CACA directed that the inspection concentrate on problems involving corrosion, cracked heat exchangers and frozen exhaust vents in condensing efficiency furnaces.

The scope of this inspection was limited in accordance with verbal instructions received from Mr. Hershman, CACA, during a 1-07-87 telecon. CPSC is currently involved in a Section 15 CAP on the firm's G14, Pulse, efficiency furnaces. Instructions were for me to review the firm's other condensing efficiency furnaces and to steer clear of the Pulse furnace, unless other problems unrelated to the current CAP were uncovered.

This inspection revealed that the company only manufactures and markets ONE high efficiency, condensing style furnace. The G14 Pulse has an estimated efficiency of 96 - 97%.

The firm's G16 ,Conservator III, furnace is just below the Pulse in efficiency. However, this unit is a conventional clam shell atmospheric burner with an efficiency of 78 - 82%.

Management said the firm has not received any complaints, injuries, accidents or lawsuits involving Section 15 design issues, corrosion, cracked heat exchangers or frozen vents regarding the firm's furnaces. In fact, Mr. Guthrie, indicated that Lennox does not consider the G14 frozen vent incidents of 3-4 years ago a Section 15 substantial product hazard.

Mr. Guthrie indicated a willingness to respond to specific complaints or records; however, he refused to allow me open access to the firm's complaint files nor would he give me copies of raw material or finished goods shipment records.

Additional information and an affidavit were collected from management prior to concluding this inspection.

STRUCTURE AND TYPE OF BUSINESS

Lennox Industries Inc. continues to be a privately held Iowa corporation. The firm's corporate office is located in Dallas, Texas where it has conducted business as a foreign corporation since 1947.

The firm manufactures furnaces, air conditioner and humidifier systems in seven manufacturing facilities. High efficiency furnaces are made at the firm's Marshalltown, Iowa manufacturing facility.

Mr. Guthrie stated that the firm's sales involved international and interstate commerce. Yearly sales are in access of $300 million.

COMPLIANCE HISTORY

The firm's corporate office was last inspected during July 1981 as a follow-up to IDI 810415DAL5036 and two consumer complaints. Compliance listed that inspection as NAI.

During 1984 Lennox informed CPSC that the vents on some G14 furnaces were freezing under severe weather conditions. In December 1984 CPSC determined that the problem was a Section 15 hazard; however, Lennox's legal counsel disagreed. In November 1986 CPSC accepted Lennox's insulation retrofit program on G14 furnaces as an acceptable CAP.

INDIVIDUAL RESPONSIBILITY AND PERSONS INTERVIEWED

I entered the firm on 1/8/87, identified myself, and asked to see the person-in-charge. I was directed to Mr. Richard Guthrie, Corporate Counsel.

I met with Mr. Guthrie, presented my credentials, issued a notice of inspection and explained the purpose of my visit. Mr. Guthrie indicated that this meeting would be a short one due his prior commitments. He had two interrogatories which needed to be answered today.

Arrangements were made for an appointment on 1-20-87. Before this visit was concluded I obtained some corporate information from Mr. Guthrie.

The bulk of this inspection took place in Mr. Guthrie's office on 1-20-87. Mr. Howard Pitts, Director of Corporate Service, was present along with Mr. Guthrie. Both Mr. Guthrie and Mr. Pitts participated and supplied information during the inspection. They answered my questions and supplied documents. Mr. Guthrie also signed an affidavit.

Top company personnel were identified as follows:

Dallas Corporate Office

John W. North, Jr.	-	President & CEO
Richard E. Guthrie	-	Corporate Counsel
Howard Pitts	-	Director of Corporate Service

Marshalltown, Iowa Plant

Harry Bizios	-	General Manager
Tommy Thompson	-	Factory Manager

COMPLAINT FILE

Mr. Pitts said he works with the firm's dealers/installers in the U.S. and Canada on a daily basis. He indicated that each region of the country has a Service Representative who provides technical assistance to local installers and handles complaints. Complaints are forwarded from various offices and end up in his division were they are reviewed. They then respond to each one on an individual basis.

According to Mr. Guthrie, the complaint/correspondence files are categorized as follows: (1) by year, (2) by region of the country, (3) and by the name of the individual who sent the letter.

He stated that the firm does not list correspondence by product. Therefore, the same files would contain letters involving furnaces, air conditioners and humidifiers.

Management stated that the firm has not received any complaints, injuries, accidents or lawsuits involving Section 15 design issues, corrosion, cracked heat exchangers or frozen furnace vents. In fact, Mr. Guthrie, indicated that Lennox does not consider the frozen vent incidents involving the G14 a Section 15 substantial product hazard.

Mr. Guthrie emphasised that the company does not have any injury or accident lawsuits. The firm does have one case revolving around the installation of a G14. He said the installer knocked a hole in the unit during installation and the consumer sued both the installer and Lennox.

Mr. Pitts agreed with Mr. Guthrie that the firm had not received any accidents or injuries involving corrosion or cracked heat exchangers. The G14 did experience some freezing problems with the venting system; however, that problem was corrected two years ago and reported to CPSC. Lennox has not had any new incidents with frozen vents.

I asked to see the firm's complaint files but Mr. Guthrie refused. He said my request sounds like a fishing expedition. Mr. Guthrie did indicate a willingness to respond to specific complaints or records, such as a letters involving a particular individual or incident, see exhibit # 2.

PRODUCT GUARANTEES AND COMPONENTS

Lennox does not give or receive any CPSC related guarantees or certifications.

Mr. Pitts identified the firm's major component suppliers as follows:

1. blower fan motor - General Electric and Emerson
2. fan limit switch - Honeywell
3. gas valves - Robertshaw
4. ignitions - Gas Energies, Japan

Management stated that various sales division offices and warehouses handle the purchases of component parts for the firm's seven manufacturing plants.

My request for copies of shipment and invoice records covering the firm's receipt of its raw materials was refused by Mr. Guthrie. I informed him that one of the reasons for requesting this documentation was to establish interstate commerce.

His response was that a simple statement from him saying that Lennox is involved in interstate commerce should suffice, see exhibit # 2.

PRODUCT EXAMINATION

No furnaces were available for examination at the firm's corporate offices.

The STI initiating this inspection focuses on high efficiency furnaces. As previously stated, the firm only manufactures one such furnace, the G14 Pulse. High efficiency furnaces are made in the firm's plant located in Marshalltown, Iowa. That plant is the primary source for technical and engineering information covering these furnaces.

Mr. Pitts was able to supply me with some sales brochures and engineering data and installation instructions on the firm's most efficient furnaces, the G14 Pulse and G16 Conservator III, see exhibit 4 - 14.

G14 Pulse Furnaces

The Pulse is a high energy efficient condensing furnace system. Lennox claims a fuel utilization efficiency of 91 - 97%, based on DOT test procedures, for the Pulse systems. The California Seasonal Efficiency rating of these furnaces is 75 - 90%.

Horizontal and down-flo Pulse models are made in three capacities (50,000, 80,000 and 100,000 Btuh input). The furnaces can be used with natural or propane gas.

The units operate on a pulse combustion principle and do not use a pilot burner, main burner, conventional flue or chimney. The heat exchanger design on the G14 includes a finned cast iron combustion chamber, temperature resistant steel tailpipe, aluminized steel exhaust decoupler section and a finned stainless steel tube condenser coil similar to an air conditioner coil.

An automotive type spark plug is used for ignition on the initial cycle only. The pulse combustion principle is explained in the attached engineering documents, exhibit # 11 & 12.

The furnace can be vented through a side wall, roof or to the top of an existing chimney with up to 35 feet of pipe and four 90 degree elbows. A 2 inch polyvinylchloride, PVC, pipe is used for venting since flue vent temperatures are between 100 - 130 degrees F.

It is equipped with a standard type redundant gas valve in series with a gas expansion tank, gas intake flapper valve and air intake flapper valve. The system uses automatic 100% shutoff safety gas valves.

A purge blower, spark plug igniter and flame sensor with a solid-state control circuit board are factory installed. Other standard equipment includes a fan and limit control, 30 VA transformer, blower cooling relay, flexible gas line connector, four isolation mounting pads, base insulation pad, condensate drip leg and cleanable air filter. The electrical characteristics of the G14 is 120 volts, 60 herts, and 1 phase (less than 12 amps).

The up-flo and down-flo Pulse series models includes units with different Btuh input and efficiency. The up-flo units range in capacity from 40,000 to 100,000 Btuh input while the down-flo furnaces range between 50,000 and 100,000 Btuh. The model numbers are as follows:

Up-flo

G-14Q3-40, G-14Q3-60, G-14Q3-80, G-14Q3-100,
G-14Q4-60, G-14Q4-80, G-14Q4-100
G-14Q5-80, G-14Q5-100

Down-flo

GSR14Q3-50,
GSR14Q4-50, GSR14Q3-80,GSR14Q4-80, GSR14Q4-100,
GSR14Q5-80, GSR14Q5-100

Additional engineering and specification data on the Pulse furnace and each model is attached, see exhibits 10 - 14.

G16 Conservator III Furnaces

Mr. Pitts identified this group of furnaces as their next highest in efficiency. It has been manufactured and sold to the general public for the last 3 - 4 years. This is NOT a condensing type furnace but rather a conventional clam shell atmospheric burner with a conventional heat exchanger. I was told that the firm has been using this heat exchanger for the past 20 years.

Mr. Pitts stated that the efficiency of the G16 is 80%, plus or minus one or two percent. Lennox sales brochures claims a fuel utilization efficiency of 80 - 81%, based on DOT test procedures, for the Pulse systems. The California Seasonal Efficiency rating of these furnaces is 72 - 73%.

This system is located in a cabinet made of heavy gauge cold rolled steel. Gas piping and electrical inlets are provided in both sides of the cabinet.

It uses the Lennox Duracurve aluminized steel heat exchanger which is made of heavy gauge aluminized steel construction.

The Conservator III uses 100% safety shut off .24 volt redundant combination control valve with automatic safety pilot, manual shut off knob, pilot filtration, automatic electric dual valve and a gas pressure regulator. A solid-state electronic direct spark igniter provides ignition of the pilot burner during each running cycle of the furnace. The main burners and pilot gas are extinguished during the off cycle. The main gas valve opens only when the pilot burner is lit.

The burners are made of aluminized steel. Each burner has four rows of ports. A crossover igniter of burner ports is perpendicular to the main burner.

An induced draft blower prepurges heat exchanger and safety vents combustion products. It will operate only during the heat demand cycle. A pressure switch prevents the furnaces operation in case the combustion air or flue outlets are blocked.

Mr. Pitts said the vent piping used on these furnaces is the double wall galvanized pipe recommended by the National Gas Code. He also stated that the exhaust heat on this system is at least 400 degrees F.

Other features include a 24 volt control transformer, variable speed direct drive blowers, and a hammock type wraparound air filter.

These conventional furnaces are available in up-flo and down-flo models with capacities ranging rom 50,000 to 125,000 Btuh input. The model numbers include:

Up-flo

G16Q2X-50, G16Q2-50,
G16Q3X-50, G16Q3-50, G16Q3X-75, G16Q3-75, G16Q3X-100, G16Q3-100,

G16Q4X-75, G16Q4-75, G16Q4X-100, G16Q4-100, G16Q4X-125, G16Q4-125,

G16Q5X-100, G16Q5-100, G16Q5X-125, G16Q5-125,

Down-flo

G16RQ3X-50, G16RQ3-50, G16RQ3X-75, G16RQ3-75,
G16QR4X-100, G16RQ4-100, G16RQ4X-125, G16RQ4-125,

G16RQ5X-125, G16RQ5-125

Additional engineering and specification data on the G16 furnace and each model is attached, see exhibits 4 - 9.

RECALL PROGRAM, PRODUCT LABELING & CODES

Management indicated that the firm does not have a written recall plan. Mr. Pitts said the firm's last recall took place about 4 - 5 years ago and involved limit controls.

Labels used on the firm's products are located at the Marshalltown, Iowa manufacturing facility. The labels are used in accordance with Federal Trade Commission regulations and American Gas Association (AGA) certification requirements.

Lennox uses a combination date code and sequential serial number on their furnaces. Mr. Pitts gave the number "58 87A 00005" as an example of a Lennox product code.

The first two numbers, 58, identify the plant of manufacturer. The second two numbers state the year of manufacture as 1987 while the letter A identifies the month of manufacturer as January. The last five numbers are sequential. Each newly made furnace has the next series of numbers in sequence.

PROMOTION AND ADVERTISING

Lennox has a sales division which promotes their products to the general public and dealers. Attached are sales brochures used by Lennox personnel to market the furnaces covered in this inspection, exhibit # 4 & 10.

DISTRIBUTION

Mr. Guthrie stated that the firm's products are sold and shipped to dealers and the general public via international and interstate commerce.

I asked for the names of major customers and copies of invoices covering the firm's shipment of finished goods.

Management indicated that this information, like the raw material invoices, is considered proprietary. Mr. Guthrie refused to provide me with this information or records.

Independent dealers handling Lennox furnaces is listed in the yellow pages of most major cities. Dealers listed in these directory include:

1. Bon Air Service, Dallas, Texas.
2. Braggs Service Company, Carrollton, Texas.
3. Hoffman-Oxford Air, Irving, Texas.
4. Texas Air Conditioning Contractors, Garland, Texas.
5. Quality Air Inc., Oklahoma City, OK.
6. Action Air Conditioning, Tulsa, OK.

MANUFACTURING & QUALITY CONTROL PROGRAM

No furnace manufacturing operations take place at the Lennox corporate office.

Both Mr. Guthrie and Mr. Pitts stated that the high efficiency furnaces are made in their Marshalltown, Iowa plant. They have limited knowledge about the plant's production operations or quality control procedures.

Mr. Guthrie identified the company officials responsible for the manufacturing plant and its operation as Harry Bizios, General Manager, and Tommy Thompson, Factory Manager.

Mr. Pitts indicated that the raw materials used to make their furances go through an inspection procedure; however, he does not know the specifics of this QC testing. He also stated that every furnace, 100%, is test fired before being shipped from the plant.

According to Mr. Pitts, the manufacture of the G14 is controlled and tested through the use of a computer system. He said the computer collects a large amount of data on the G14 during their manufacture and quality control testing operations.

I requested copies of manufacturing and QC testing procedures as well as copies of completed tests reports. Management stated that these records are not kept at the corporate office. Mr. Pitts indicated that this information is retained at the factory.

I was able to determine that the G16 furnaces are design certified by A.G.A Laboratories and ratings are certified by GAMA. The units are rated and tested according to Department of Energy test procedures and Federal Trade Commission labeling regulations. The G16 gas models meet the California Nitrogen Oxides Standards and California Seasonal Efficiency requirements, see exhibit # 5 & 6.

VIOLATIVE CONDITIONS & SAMPLE COLLECTION

No violative conditions were observed nor were any samples collected during this inspection.

DISCUSSION WITH MANAGEMENT

This discussion was held with Mr. Guthrie and Mr. Pitts at various points in the inspection. The following CPSC information was briefly explained and given to Mr. Guthrie:

1. Compilation of Laws Administered by CPSC
2. CPSC Brochure
2. A Guide For Manufacturers, Distributors, and Retailers (Sec 15)
3. FHSA Regulations

The scope of this inspection was limited in accordance with verbal instructions received from CACA during a 1-07-87 telecon. CPSC is currently involved in a Section 15 CAP on the firm's G14, Pulse, efficiency furnaces. Instructions were for me to review the firm's other condensing efficiency furnaces and to steer clear of the Pulse furnace, unless other problems unrelated to the current CAP were uncovered.

During the inspection I requested product data on the quantity of each model of high efficiency furnaces produced by Lennox on a yearly bases. I also asked for the firm's estimated annual gross sales figures.

Mr. Guthrie indicated that this information is proprietary. He refused to give me the data. Mr. Guthrie did say that Lennox's sales are greater than $300 million.

Additional statistical data was requested on what percentage of company sales involve furnaces verses total sales and a percentage breakdown of furnace sales by models. Both Mr. Pitts and Mr. Guthrie said they did not have that information.

Management did indicate that the largest segment of furnace sales involve low efficiency furnaces. Mr. Guthrie speculated that G14 systems may account for 2 % of sales.

Please see other sections of this report for additional information obtained during these establishment visits.

This inspection was terminated after I obtained an affidavit, exhibit # 2.

EXHIBITS

1. NOTICE OF INSPECTION DATED 1-8-87
2. NOTICE OF INSPECTION DATED 1-20-87
3. AFFIDAVIT
4. SALES BROCHURE - CONSERVATOR III FURNACE
5. ENGINEERING DATA - G16 UP-FLO FURNACES
6. ENGINEERING DATA - G16 DOWN-FLO FURNACES
7. INSTALLATION INSTRUCTIONS - G16 DOWN-FLO FURNACES
8. INSTALLATION INSTRUCTIONS - G16 UP-FLO FURNACES
9. SALES BROCHURE - PULSE FURNACE DATED 1986
10. SALES BROCHURE - PULSE FURNACE DATED 1985
11. ENGINEERING DATA - G14 UP-FLO FURNACES
12. ENGINEERING DATA - G14 DOWN-FLO FURNACES
13. INSTALLATION INSTRUCTIONS - G14 HORIZONTAL FURNACE
14. INSTALLATION INSTRUCTIONS - G14 DOWN-FLO FURNACES
15. ASSIGNMENT

E.I.R. EXHIBIT 1
MFR ~~1/8 & 2/87~~ Lennox
DATE 1/8 & 20/87 INSPECTOR [illegible]

U.S. CONSUMER PRODUCT SAFETY COMMISSION

NOTICE OF INSPECTION

1. DATE	3. FROM (Area Office and Address)
	CONSUMER PRODUCT SAFETY COMMISSION DALLAS AREA OFFICE ROOM 1C10, 1100 COMMERCE STREET DALLAS, TEXAS 75242
2. TIME 9 44 A.M. _____ P.M.	

4. TO

A. NAME AND TITLE OF INDIVIDUAL

B. FIRM NAME
Lennox Industries Inc.

C. NUMBER AND STREET ADDRESS
7920 Belt Line Rd. ([illegible])

D. CITY, STATE AND ZIP CODE
Dallas TX 75380

Notice of Inspection is hereby given pursuant to:

- Flammable Fabrics Act (15 U.S.C. 1191 *et seq.*);
- Federal Trade Commission Act (15 U.S.C. 41 *et seq.*);
- Sections 16, 19 and 27 of the Consumer Product Safety Act (15 U.S.C. 2065, 2068 and 2076)
- Section 704(a) of the Federal Food, Drug, and Cosmetic Act (21 U.S.C. 374(a)) [Authority for inspections in connection with the Poison Prevention Packaging Act of 1970 (15 U.S.C. 1471 *et seq.*)] and/or
- Section 11(b) of the Federal Hazardous Substances Act as Amended (15 U.S.C. 1270(b)).

Refer to the back of this form for a discussion of inspectional authority and for pertinent statutory language.

5. PURPOSES OF INSPECTION AND NATURE OF INFORMATION TO BE OBTAINED AND/OR COPIED.

The purpose of this inspection is to obtain information; to review and obtain copies of items including but not limited to records, reports, books, documents; and labeling; and to obtain samples, in order to enforce or determine compliance with the Acts administered by the Consumer Product Safety Commission.

HOWARD PITTS
Director of Corporate Service

LENNOX Industries Inc.
AIR CONDITIONING • HEATING
Established 1895

P.O. Box 809000
Dallas, TX 75380-9000
Phone: 214 + 980-6089

RICHARD E. GUTHRIE
Corporate Counsel

LENNOX Industries Inc.
AIR CONDITIONING • HEATING
Established 1895

P.O. Box 809000
Dallas, Texas 75380-9000
Phone: 214 - 980-6196

Those from whom information is requested should state whether any of the information submitted is believed

144

E.I.R. EXHIBIT 2
MFR Sennox
DATE 1/8+20/87 INSPECTOR JSW

U.S. CONSUMER PRODUCT SAFETY COMMISSION

NOTICE OF INSPECTION

1. DATE	3. FROM (Area Office and Address)
2. TIME _____A.M. _____P.M.	CONSUMER PRODUCT SAFETY COMMISSION DALLAS AREA OFFICE ROOM 1C10, 1100 COMMERCE STREET DALLAS, TEXAS 75242

4. TO

A. NAME AND TITLE OF INDIVIDUAL

[illegible]

B. FIRM NAME

[illegible]

C. NUMBER AND STREET ADDRESS

[illegible]

D. CITY, STATE AND ZIP CODE

[illegible]

Notice of Inspection is hereby given pursuant to:

- Flammable Fabrics Act (15 U.S.C. 1191 *et seq.*);
- Federal Trade Commission Act (15 U.S.C. 41 *et seq.*);
- Sections 16, 19 and 27 of the Consumer Product Safety Act (15 U.S.C. 2065, 2068 and 2076)
- Section 704(a) of the Federal Food, Drug, and Cosmetic Act (21 U.S.C. 374(a)) [Authority for inspections in connection with the Poison Prevention Packaging Act of 1970 (15 U.S.C. 1471 *et seq.*)] and/or
- Section 11(b) of the Federal Hazardous Substances Act as Amended (15 U.S.C. 1270(b)).

Refer to the back of this form for a discussion of inspectional authority and for pertinent statutory language.

5. PURPOSES OF INSPECTION AND NATURE OF INFORMATION TO BE OBTAINED AND/OR COPIED.

The purpose of this inspection is to obtain information; to review and obtain copies of items including but not limited to records, reports, books, documents; and labeling; and to obtain samples, in order to enforce or determine compliance with the Acts administered by the Consumer Product Safety Commission.

6. FREEDOM OF INFORMATION REQUIREMENTS

MFR Sennet

DATE 1/8+20/87 INSPECTOR [illegible]

AFFIDAVIT

SAMPLE NO.

STATE OF Texas COUNTY OF Dallas

Before me, Zannie E. Weaver, a duly authorized employee of the Consumer Product Safety Commission, appropriately designated by the Chairman of said Commission pursuant to provisions of the Consumer Product Safety Act (sec. 27 (b)(2), 86 Stat. 1228; 15 U.S.C. 2076 (b)(2)), to administer, or take oaths, affirmations, and affidavits, personally appeared Richard Guthrie in the county and State aforesaid, who, being first duly sworn, deposes and says:

My name is Richard Guthrie and I am the Corp. Counsel at Sennet Industries Inc 7920 Bell Line, Dallas, Texas. In this position I have responsibilities concerning and knowledge of this firm's operations and records.

During 1/8+20/87 CPSC Investigator Zannie Weaver inspected this firm and requested information about our operation, specifically high efficiency furnaces.

This firm only makes one high efficiency condensing ~~condensation~~ style, furnace. This is the G-14. The next closest ~~model~~ model of furnace we make, in efficiency is the G-16. This is a conventional atmospheric

AFFIANT'S SIGNATURE & TITLE Richard E. Guthrie, Corporate Counsel

FIRM (Name and address, include ZIP Code)

Subscribed and sworn to before me at Dallas, Texas (City and State)

this 20 day of Jan., 1987

Zannie E. Weaver (Employee's Signature)

EMPLOYEE OF THE CONSUMER PRODUCT SAFETY COMMISSION ACTING IN ACCORDANCE WITH AUTHORITY GRANTED IN THE ABOVE STATED DECLARATION.

CPSC FORM NO. 158

146 P1

F.I.P. EXHIBIT 5

Sennot

DATE 1/8 & 20/ INSPECTOR AFFIDAVIT

SAMPLE NO.

STATE OF 87 Texas

COUNTY OF Dallas

Before me, Zannie E. Weaver, a duly authorized employee of the Consumer Product Safety Commission, appropriately designated by the Chairman of said Commission pursuant to provisions of the Consumer Product Safety Act (sec. 27 (b)(2), 86 Stat. 1228; 15 U.S.C. 2076 (b)(2)), to administer or take oaths, affirmations, and affidavits, personally appeared Richard Guthrie in the county and State aforesaid, who, being first duly sworn, deposes and says:

burner. Both units are made in our Iowa plant. Zannie asked if we had experienced any problems with (1) corrosion, (2) cracked heat exchangers &/or (3) frozen exhaust vents regarding our furnaces. This firm previously notified CPSC about some frozen vent problems we experienced. That was not a section 15 hazard. Those frozen vent cases with the G-14 furnaces have been corrected.

No such problems have developed with our other models. This firm has not received any claims or lawsuits involving product related accidents or injuries.

Our sales of furnaces involve interstate commerce.

During the inspection Zannie requested

AFFIANT'S SIGNATURE & TITLE

Richard E. Guthrie Corporate Counsel

FIRM (Name and address, include ZIP Code)

Subscribed and sworn to before me at Dallas, Texas (City and State)

this 20 day of Jan, 1987

Zannie E Weaver (Employee's Signature)

EMPLOYEE OF THE CONSUMER PRODUCT SAFETY COMMISSION ACTING IN ACCORDANCE WITH AUTHORITY GRANTED IN THE ABOVE STATED DECLARATION.

CPSC FORM NO. 158

147 p2

E.I.R. EXHIBIT 3

MFR Lennox

DATE 1/8/20/87 INSPECTOR Z AFFIDAVIT

SAMPLE NO.

STATE OF Texas

COUNTY OF Dallas

Before me, Zannie E Weaver, a duly authorized employee of the Consumer Product Safety Commission, appropriately designated by the Chairman of said Commission pursuant to provisions of the Consumer Product Safety Act (sec. 27 (b)(2), 86 Stat. 1228; 15 U.S.C. 2076 (b)(2)), to administer or take oaths, affirmations, and affidavits, personally appeared Richard Guthrie in the county and State aforesaid, who, being first duly sworn, deposes and says:

access to our complaint files and copies of raw material shipment records as well as finished goods customer shipment records. At this time I am not able to let Zannie have copies of these records or access to our complaint files, however, I indicated a willingness to fully respond to any specific individual complaint as well as to respond to ~~upon~~ REQ ZAW with specific information with regard to purchase of components subject to proprietary nature of information requested as to quantities of components purchased or product sold.

AFFIANT'S SIGNATURE & TITLE

Richard E. Guthrie, Corporate Counsel 1-20-87

FIRM (Name and address, include ZIP Code)

Lennox Industries Inc.
7920 Belt Line Road
Dallas, Tx. 75240

Subscribed and sworn to before me at Dallas, Texas
(City and State)

this 20 day of Jan, 1987

Zannie E. Weaver
(Employee's Signature)

EMPLOYEE OF THE CONSUMER PRODUCT SAFETY COMMISSION ACTING IN ACCORDANCE WITH AUTHORITY GRANTED IN THE ABOVE STATED DECLARATION.

CPSC FORM NO. 158

148 P3

GAS FURNACES

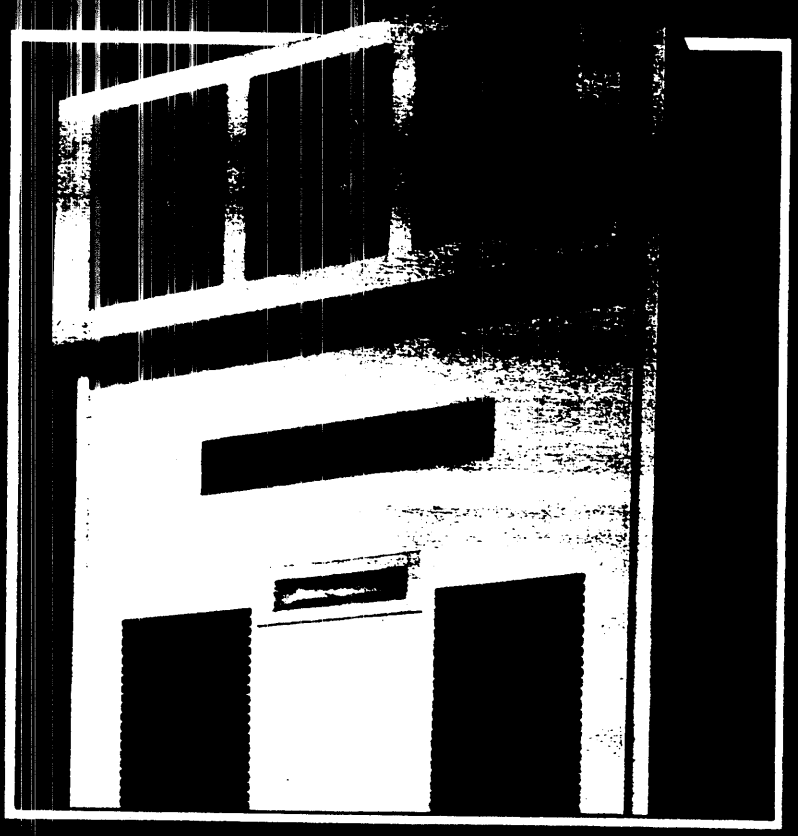

CONSERVATOR® III

High Efficiency Furnace

LENNOX

THE EFFICIENCY EXPERTS

Conservator® III

Gives You More Heat From Your Fuel Supply

The rising cost of energy has made winter comfort a major annual expense for many homeowners. But Lennox has a solution.

The CONSERVATOR® III gas furnace delivers warm, conditioned air at 80% efficiency* — a significant improvement over older, less efficient models in the 55-60% range.

This deluxe furnace features an extra-dependable Duracurve® heat exchanger with a 15-year warranty; a large, effective air filter; a quiet, resiliently mounted blower; 100% safety shutoff ignition system; and easy, low cost installation.

An important feature is its venting process. An induced draft blower pulls in combustion air only when the furnace is operating, saving heated air that normally is wasted out the vent. Your furnace "breathes" more efficiently. . .so you can breathe easier when the fuel bills arrive! Optional vertical venting may be either "dedicated" or "common" with another gas burning appliance, such as a water heater.

The CONSERVATOR III offers the perfect medium efficiency solution for upgrading your present furnace to meet any of today's minimum efficiency standards. And of course, Lennox' quality and reliability assures year-round comfort and dependable performance.

Electronic Ignition Saves Gas

Powerlite™ electronic ignition enables the CONSERVATOR III to use gas only when there is a demand for heat. There is no standing pilot to waste gas. If, for any reason, there is ignition failure, a 100% lockout gas guard will close down the gas flow and shut off the spark. It gives you an added dimension of safety. It also allows the use of propane gas as a fuel source with proper manifold alterations.

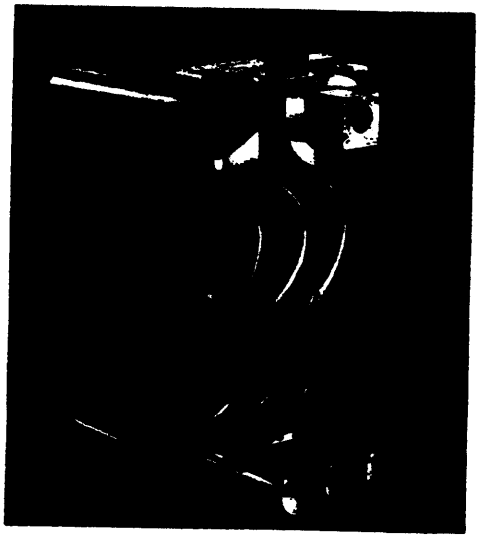

Exclusive Duracurve® Heat Exchanger

One of the most efficient heat exchanger designs in the industry and only Lennox has it. Sculptured curves provide free expansion and contraction at temperature extremes. No cracking. No popping. No damaging metal fatigue. This acclaimed design is proven to give long years of safe, trouble-free service.

Efficiency You Can Count On

Some competing furnaces (above 82% AFUE) that use indoor air for combustion can have corrosion problems in their vents and heat exchangers. Lennox determined that properly designed furnaces operating at 81% AFUE and lower have flue temperatures high enough to avoid this problem. Since the CONSERVATOR III avoids this corrosion hazard, it can safely use indoor air for combustion along with standard venting materials. At Lennox, reliability is every bit as important as efficiency, so we designed the CONSERVATOR III to work efficiently and keep on working!

Fully Tested and Approved

All units are design certified by the American Gas Association. Each unit is factory tested prior to shipment to ensure top performance. Units are assembled with controls installed, piped and wired.

** Annual Fuel Utilization Efficiency rating as determined by Department of Energy standards. The higher the percentage, the more efficient the unit.*

SAFETY BUILT-IN

1. *Induced draft blower* safely vents combustion exhausts during heat cycle.

2. *Pressure switch* automatically shuts down unit if blockage occurs in the exhaust line.

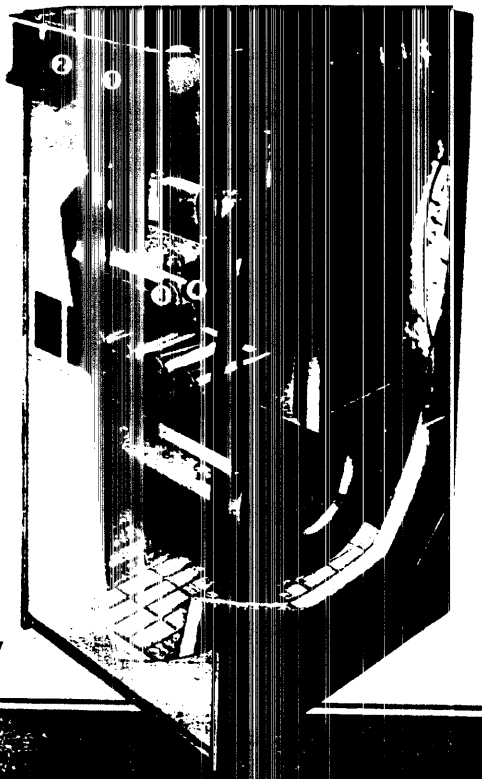

Up-flow Model

Down-flow Model

3. *Automatic gas valve* closes off gas supply completely if direct spark does not ignite gas burners.

4. *100% lockout control* may be reset manually from the room thermostat.

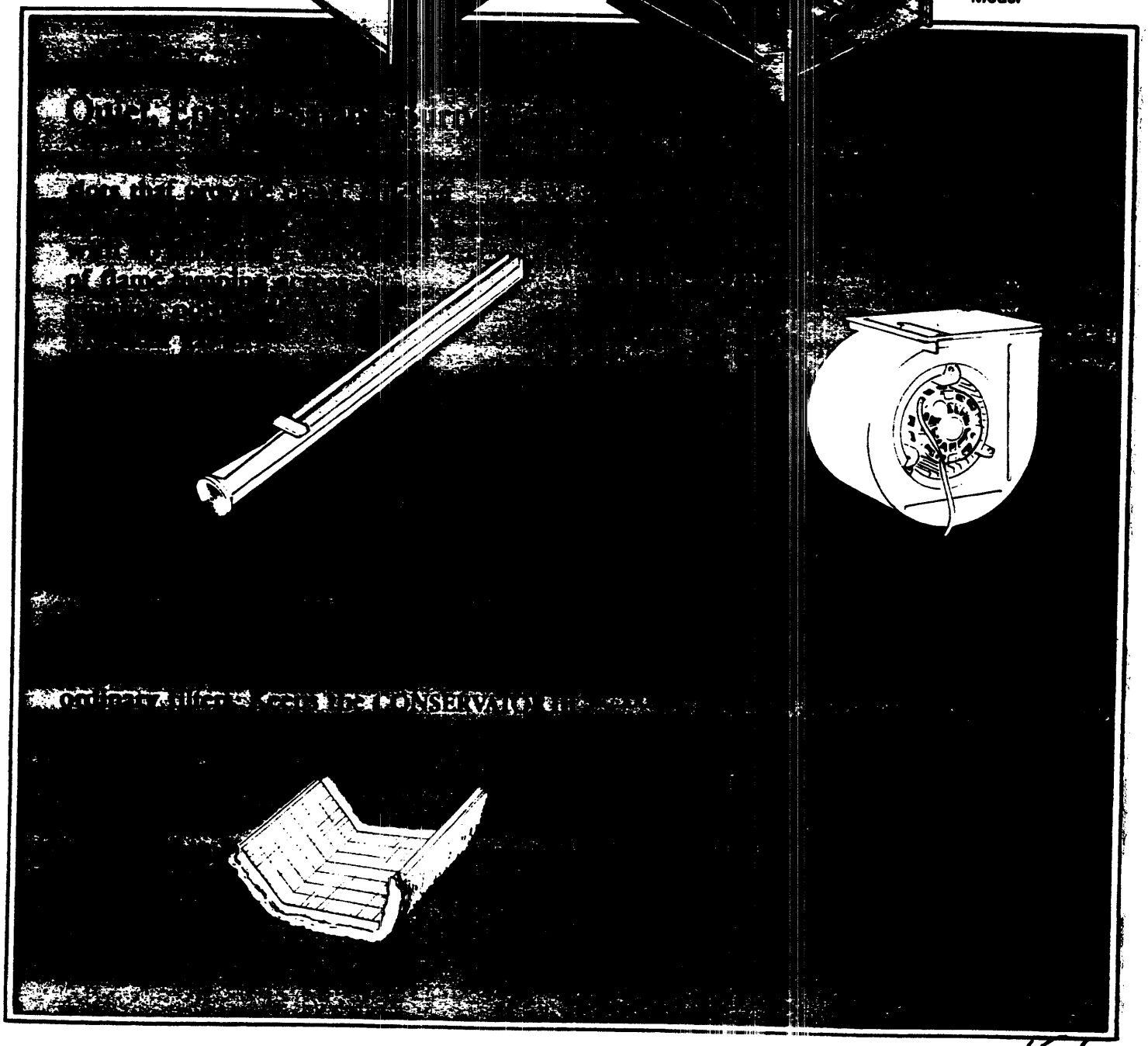

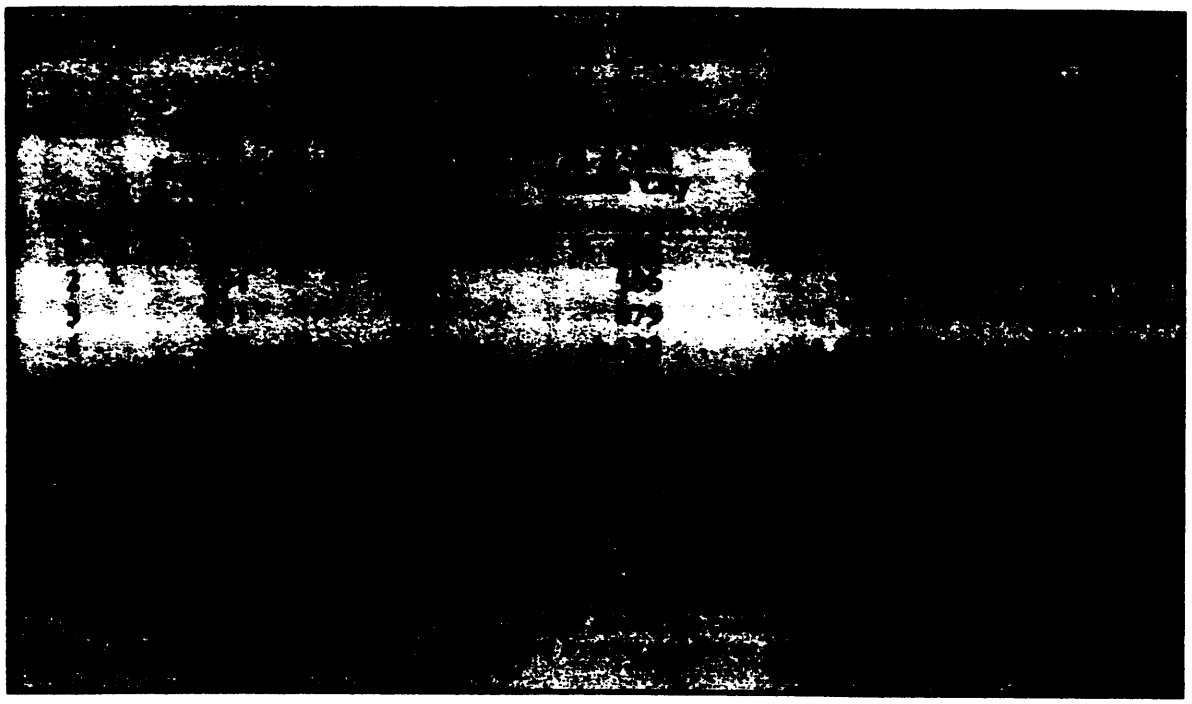

You Can Get This Lennox Efficiency In A System To Match Your Application

The CONSERVATOR III gas furnace is available in either up-flow or down-flow models. Capacities range from 50,000 to 125,000 Btuh input. Add-on cooling is available from 1½ through 5 nominal tons.

Service You Can Count On

Lennox has been building comfort equipment for 90 years and has grown to develop the most advanced home comfort equipment in the world. But just as important is the excellent service you get from your independent Lennox dealer. He's one of over 6,000 nationwide, dedicated to giving you prompt, courteous service. His installation and service integrity helps ensure the high quality performance you expect from an industry leader.

LENNOX

THE EFFICIENCY EXPERTS

Convenient Purchase Plan

Best of all, you can apply for the Lennox Convenient Purchase Plan and enjoy a major line of credit with no money down. Discover how easy it is to pay for your Lennox system with low monthly payments while it's saving you money on your heating bills.

LENNOX

THE EFFICIENCY EXPERTS™

©1986 Lennox Industries Inc.

Made In The USA

E.I.R. EXHIBIT 5
MFR Lennox
DATE 1/8/86 INSPECTOR

LENNOX®

G16 AND G16X SERIES — CONSERVATOR® III UP-FLO GAS FURNACES

50,000 to 125,000 Btuh Input
Add-On Cooling — 1 thru 5 Nominal Tons

Typical Applications

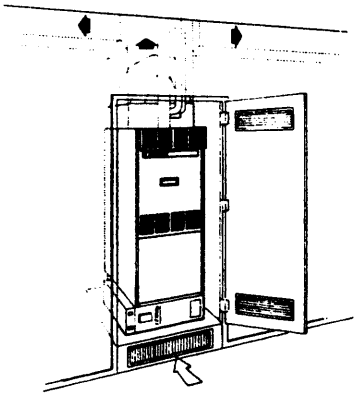

Closet Installation with cooling coil and electronic air cleaner.

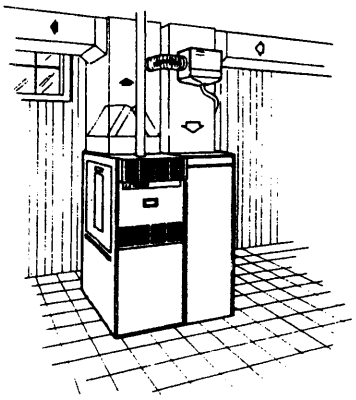

Basement Installation with cooling coil, return air cabinet and power humidifier.

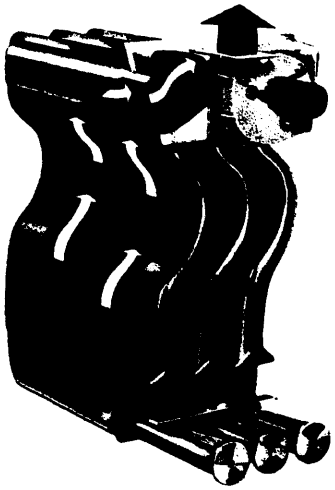

Lennox DURACURVE® Aluminized Steel Heat Exchanger

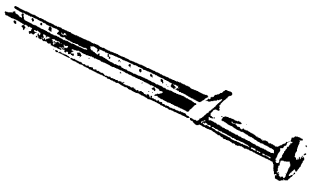

Aluminized Steel Burners

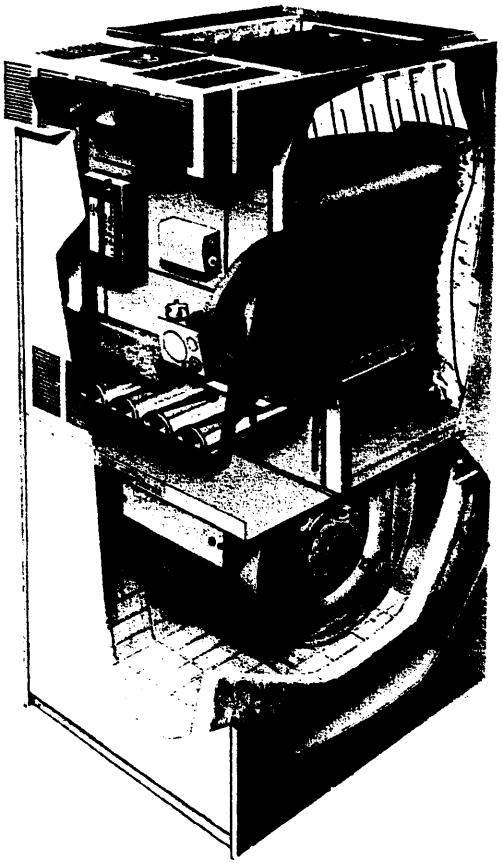

Lennox G16 and G16X Series Up-Flo Gas Furnaces Feature High Efficiency Operation and Installation Versatility

The G16 and G16X series line of gas fired furnaces include seven models (natural gas or LPG) with Btuh input capacities of 50,000, 75,000, 100,000, 125,000 and energy efficiencies (AFUE) of 80% or above. Compact, rugged cabinet with either side or bottom return air entry, will allow installation in a basement, closet, recreation or utility room. Optional return air cabinets are available to simplify return air duct connection to the furnace. The matching return air cabinet may be installed on either side of the furnace. Lennox add-on evaporator coils, electronic air cleaners and power humidifiers can easily be added to the furnace for a complete all season installation.

Units are equipped with the gas saving automatic electronic pilot ignition system. Pilot flame is on only during main burners operating cycles. No need to shut off pilot during air conditioning season. Flue draft will be created by a induced draft blower mounted on the flue collector box on the outlet of the heat exchanger. The furnaces can be vented vertically as a common vent with another appliance.

G16 series furnaces are design certified by A.G.A. Laboratories and ratings are certified by GAMA. Units have been rated and tested according to Department of Energy (DOE) test procedures and Federal Trade Commission (FTC) labeling regulations in the Lennox Research Laboratory. G16X (natural gas) models meet the California Nitrogen Oxides (NO_X) Standards and California Seasonal Efficiency requirements. Blower data is from unit tests conducted in the Lennox Laboratory air test chamber.

Units are shipped factory assembled with all controls installed. Each unit is factory test operated insuring proper operation. Installer has only to make flue vent, gas supply and electrical connections.

FEATURES

Lennox DURACURVE® Aluminized Steel Heat Exchanger — Lennox developed and proven heat exchanger eliminates fatigue failure, ticking, resonance and cleanability problems. In the unique design of this heat exchanger the sides of the clam section form a flue restriction zone comprised of two concentric cylinders. As the sides grow they expand and move, but in the same direction and at the same rate. The result is perfect combustion, proper venting and absolute freedom of movement for the metal. Design also results in high input to heat surface ratio, low resistance to air travel reducing blower horsepower requirements and ease of cleaning. Heavy gauge aluminized steel construction provides long service life. Laboratory life cycle testing proves long life of heat exchanger.

Rugged Cabinet — Constructed of heavy gauge cold rolled steel. Cabinet is subject to a five station metal wash process resulting in a perfect bonding surface for a paint finish of baked-on enamel. The paint solution and metal are given opposite electrical charges resulting in positive adhesion and even coverage of the paint to the metal surfaces. Cabinet surface temperatures are low due to interior metal liners on each side of the cabinet and foil covered fiberglass insulation on vestibule panel and on back panel. Holes for leveling are provided in cabinet base, installer must furnish bolts and nuts. Complete service access is accomplished by removing furnace and blower compartment access panels. Blower assembly and filter may be completely removed from unit for service. Safety interlock switch located in wiring junction box automatically turns power off to unit when blower compartment access panel is removed. Gas piping and electrical inlets are provided in both sides of cabinet. Return air entry is possible on either side or bottom of cabinet. Matching add-on Lennox up-flo evaporator coils (1 thru 5 nominal tons) are available for all season applications.

Aluminized Steel Burners — Each burner has four rows of practically continuous ports which result in quiet and clean combustion. A crossover igniter of burner ports, perpendicular to the main burner, carries a positive flame from burner to burner to achieve quiet and sure ignition.

Induced Draft Blower — Factory installed induced draft blower prepurges heat exchanger and safely vents combustion products. Operates only during heat demand cycle. A pressure switch prevents unit operation in case of blockage of combustion air or flue outlet.

Fan and Limit Controls — Factory installed and accurately located. Fan control has adjustable temperature setting. Control has fixed temperature setting and protects unit from abnormal operating conditions.

Wiring Junction Box — Power supply and thermostat wiring connections are made at the wiring junction box. Conveniently located in blower compartment for easy access. Low voltage terminal strip is furnished.

Transformer — 24 volt control transformer is furnished as standard equipment and is factory installed in wiring junction box.

Blower Cooling Relay — Furnished as standard equipment and factory installed in the wiring junction box. Relay activates blower operation during cooling cycle.

Powerful Blowers — Units are equipped with quiet variable speed direct drive blowers. Each blower assembly is statically and dynamically balanced. Multiple-speed motor is resiliently mounted. A choice of blower speeds is available on each blower. See blower performance charts. Change in blower speed is easily accomplished by simple wiring change.

Large Air Filter — Units are equipped with hammock type wrap-around filter. Media is one inch thick oil impregnated fiberglass. Filter mounting rack design provides quick and simple replacement of media for servicing.

Automatic Gas Controls & Electronic Pilot Ignition — Silent operating gas controls provide 100% safety shut off. 24 volt redundant combination gas control valve combines automatic safety pilot, manual shut-off knob (On-Off), pilot filtration, automatic electric valve (dual) and gas pressure regulation into a compact combination control. Dual valve design provides double assurance of 100% close off of gas to the pilot and main burners on each off cycle. Solid-state electronic direct spark igniter provides positive ignition of pilot burner on each operating cycle. Pilot gas is ignited and burns during each running cycle (intermittent pilot) of the furnace. Main burners and pilot gas are extinguished during the off cycle. This system permits main gas valve to open only when the pilot burner is proven to be lit. Should a loss of flame occur the main valve closes and the pilot spark recurs immediately. Pilot ignition is a fully automatic operation on demand for heat.

LPG Conversion Kit (Optional) — For LPG models a conversion kit is required for field changeover from natural gas. Kit is not furnished and must be ordered extra. See specification table for order number.

Return Air Cabinets (Optional) — Constructed of heavy gauge cold rolled steel with a baked-on enamel paint finish. Simplifies return air duct connection to the furnace. Shipped knocked down and must be field assembled. May be installed on either side of furnace. Must be ordered extra. See specification table and dimension drawing.

Thermostat (Not Furnished) — Heating thermostat is optional equipment and must be ordered extra. See Lennox Price Book. For all season applications, a heating-cooling thermostat is available with the condensing unit.

154

SPECIFICATIONS

Model No.	†G16Q2X-50 †G16Q2-50	††G16Q3X-50 †G16Q3-50	††G16Q3X-75 †G16Q3-75	††G16[illegible]-75 †G16Q4-75	††G16Q3/4X-100 †G16Q3/4-100	††G16Q5X-100 †G16Q5-100	††G16Q4/5X-12 †G16Q4/5-12
Input Btuh	50,000	50,000	75,000	75,000	100,000	100,000	125,000
Output Btuh	41,000	41,000	61,000	61,000	80,000	81,000	100,000
†A.F.U.E.	81.0%	81.0%	80.0%	80.0%	80.0%	80.1%	80.0%
California Seasonal Efficiency	74.6%	72.7%	72.6%	73.2%	72.2%	72.5%	72.1%
Temperature rise range (°F)	35 — 65	20 — 50	30 — 65	25 — 55	35 — 65	25 — 55	35 — 65
High static certified by AGA (in. wg.)	.50	.75	.50	.75	.50	.75	.50
Flue size connection (in. diameter)	3	3	3	3	3	3	3
Gas piping size I.P.S. (in.) nat. or LPG	1/2	1/2	1/2	1/2	1/2	1/2	1/2
Blower motor horsepower	1/4	1/3	1/3	1/2	1/2	3/4	3/4
Blower wheel nominal dia. x width (in.)	9 x 7	10 x 7	10 x 7	10 x 8	10 x 8	12 x 12	12 x 9
Net filter area (sq. ft.) & cut size (in.)	(5.8) 36x28x1	(5.8) 36x28x1	(5.8) 36x28x1	(6.6) 40x28x1	(6.6) 40x28x1	(8.9) 52x28x1	(8.9) 52x28x1
Tons of cooling that can be added	1, 1-1/2 or 2	2-1/2 or 3	2-1/2 or 3	3-1/2 or 4	3, 3-1/2 or 4	4 or 5	4 or 5
Shipping weight (lbs.) — 1 Package	160	165	170	195	205	260	270
Electrical characteristics	120 volts — 60 hertz — 1 phase (less than 12 amps) — All Models						
Return Air Cabinet (Optional) — Model No.	RA10-16-49	RA10-16-49	RA10-16-49	RA10-16-49	RA10-16-49	RA10-16-53	RA10-16-53
Return Air Cabinet (Optional) — Shipping Wt. (lbs.)	54	54	54	54	54	56	56
*LPG Kit — Optional	LB-55207CA (All Models)						

†Annual Fuel Utilization Efficiency based on DOE test procedures and according to FTC labeling regulations. (Relates to non "X" models only).
*LPG Kit must be ordered extra for field changeover.
††Not available with LPG.

A.G.A. INSTALLATION CLEARANCES

Sides	1 inch
Rear	1 inch
Top	1 inch
Front	6 inches
Floor	Combustible
*Flue	*4 inches

*This is clearance to all flue pipes except type "B". Type "B" vent clearance is as listed by U.L.
NOTE — Flue sizing and air for combustion and ventilation must conform to the methods outlined in American National Standard (ANSI-Z223.1) National Fuel Gas Code.

HIGH ALTITUDE DERATE

Units must be derated when installed at an elevation of 2000 feet or mor above sea level. Table shows the derate manifold pressure for high altitud operation with both natural gas and LPG. Operating the unit at manifol pressure specified will insure proper unit heat input at high altitude.

Elevation Above Sea Level (feet)	Manifold Pressure (in. wc) †Heating Value (Btu/ft³) Natural Gas 900	950	1000	1050	1100	LPG Only
Sea Level — 0	4.32	3.88	3.50	3.17	2.89	9.00
1000	4.32	3.88	3.50	3.17	2.89	9.00
2000	3.65	3.30	2.95	2.70	2.45	7.61
3000	3.35	3.00	2.70	2.45	2.25	6.97
4000	3.05	2.75	2.45	2.25	2.04	6.35
5000	2.77	2.48	2.25	2.05	1.85	5.76
6000	2.50	2.25	2.00	1.85	1.65	5.20

†Heating value is based on an atmospheric pressure of 30 inches mercury ar temperature at 60°F. Consult your gas utility for the local natural gas heating valu
NOTE - This is the only permissible field derate for the units.

DIMENSIONS (inches)

G16 SERIES FURNACES

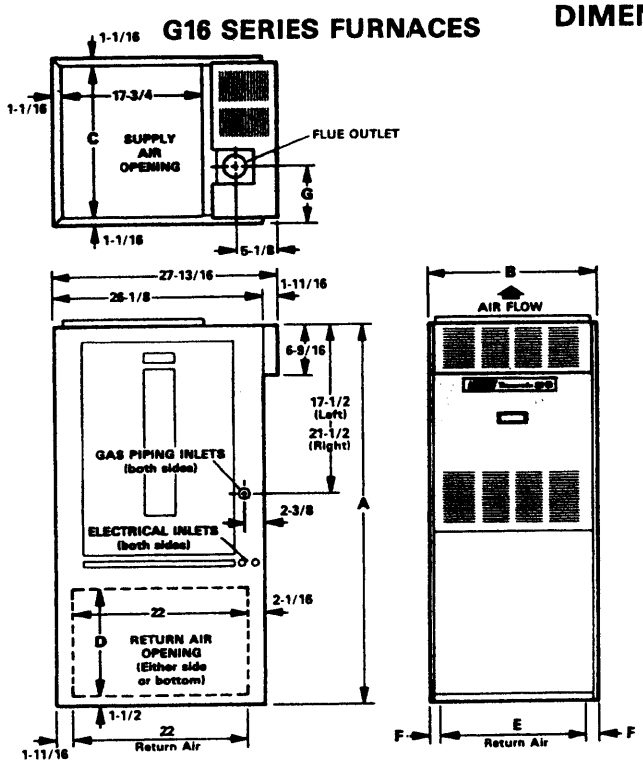

Model No.	A	B	C	D	E	F	G
G16Q2(X)-50, G16Q3(X)-50, G16Q3(X)-75	49	16-1/4	14-1/8	14	11	2-5/8	5
G16Q4(X)-75, G16Q3/4(X)-100	49	21-1/4	19-1/8	14	14	3-5/8	7-1/2
G16Q5(X)-100, G16Q4/5(X)-125	53	26-1/4	24-1/8	18	21	2-5/8	10

RETURN AIR CABINET

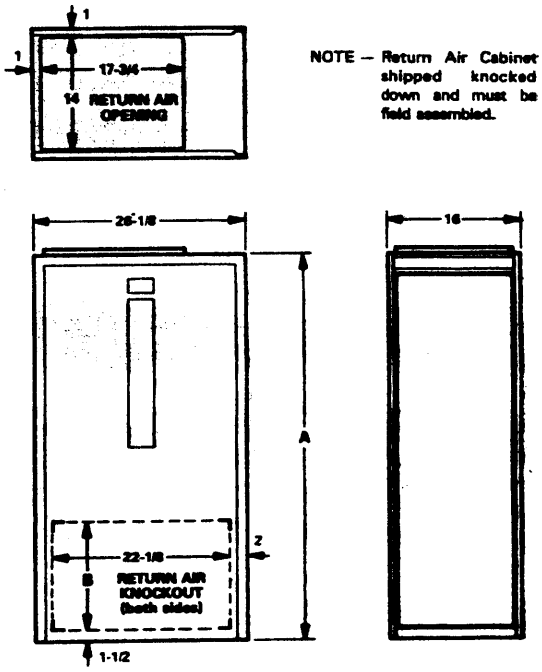

NOTE — Return Air Cabinet shipped knocked down and must be field assembled.

Model No.	RA10-16-49	RA10-16-53
A	49	53
B	14	18

BLOWER DATA

G16Q2(X)-50 BLOWER PERFORMANCE

External Static Pressure (in. wg.)	Air Volume (cfm) @ Various Speeds		
	High	Medium	Low
0	1240	980	600
.05	1225	975	602
.10	1205	975	605
.15	1185	970	605
.20	1165	970	605
.25	1140	965	600
.30	1115	955	595
.40	1060	930	580
.50	990	875	550

NOTE — All cfm is measured external to the unit with the air filter in place.

G16Q3(X)-75 BLOWER PERFORMANCE

External Static Pressure (in. wg.)	Air Volume (cfm) @ Various Speeds			
	High	Med-High	Med-Low	Low
0	1560	1265	1055	910
.05	1540	1250	1047	910
.10	1510	1240	1040	907
.15	1485	1225	1030	905
.20	1455	1215	1025	900
.25	1425	1200	1015	895
.30	1395	1185	1000	885
.40	1325	1145	970	860
.50	1245	1090	925	815
.60	1130	985	830	700

NOTE — All cfm is measured external to the unit with the air filter in place.

G16Q3/4(X)-100 BLOWER PERFORMANCE

External Static Pressure (in. wg.)	Air Volume (cfm) @ Various Speeds			
	High	Med-High	Med-Low	Low
0	1980	1715	1460	1145
.05	1970	1695	1455	1145
.10	1960	1680	1445	1140
.15	1940	1660	1440	1140
.20	1910	1640	1435	1140
.25	1880	1615	1430	1135
.30	1850	1595	1420	1130
.40	1780	1545	1395	1125
.50	1710	1480	1330	1100
.60	1625	1410	1265	1030
.70	1520	1325	1190	940
.80	1410	1230	1100	835

NOTE — All cfm is measured external to the unit with the air filter in place.

G16Q3[illegible]-50 BLOWER PERFORMANCE

External Static Pressure (in. wg.)	Air Volume (cfm) @ Various Speeds			
	High	Med-High	Med-Low	Low
0	1585	1320	1100	945
.05	1575	1310	1095	940
.10	1560	1300	1087	935
.15	1535	1285	1080	930
.20	1510	1265	1070	925
.25	1480	1245	1060	920
.30	1445	1225	1045	910
.40	1380	1175	1015	890
.50	1300	1125	980	855
.60	1205	1070	905	800
.70	1080	1025	780	700

NOTE — All cfm is measured external to the unit with the air filter in place.

G16Q4(X)-75 BLOWER PERFORMANCE

External Static Pressure (in. wg.)	Air Volume (cfm) @ Various Speeds		
	High	Medium	Low
0	1815	1420	1130
.05	1790	1415	1145
.10	1765	1410	1155
.15	1740	1405	1160
.20	1715	1402	1160
.25	1680	1395	1155
.30	1655	1390	1150
.40	1590	1365	1130
.50	1500	1325	1110
.60	1355	1230	1090
.70	1165	1100	1065

NOTE — All cfm is measured external to the unit with the air filter in place.

G16Q5(X)-100 BLOWER PERFORMANCE

External Static Pressure (in. wg.)	Air Volume (cfm) @ Various Speeds				
	High	Med-High	Medium	Med-Low	Low
0	2835	2550	2290	1945	1700
.05	2820	2535	2275	1930	1690
.10	2790	2515	2265	1910	1675
.15	2760	2495	2230	1895	1650
.20	2740	2475	2210	1875	1630
.25	2700	2450	2185	1860	1615
.30	2670	2435	2160	1840	1595
.40	2600	2390	2110	1800	1550
.50	2535	2340	2050	1750	1500
.60	2450	2280	1985	1700	1450
.70	2380	2210	1910	1645	1390
.80	2290	2130	1830	1580	1310

NOTE — All cfm is measured external to the unit with the air filter in place.

G16Q4/5(X)-125 BLOWER PERFORMANCE

External Static Pressure (in. wg.)	Air Volume (cfm) @ Various Speeds				
	High	Med-High	Medium	Med-Low	Low
0	2535	2290	2040	1800	1590
.05	2510	2270	2025	1790	1575
.10	2490	2250	2010	1775	1560
.15	2465	2225	1990	1760	1540
.20	2435	2200	1970	1740	1525
.25	2405	2175	1940	1720	1500
.30	2370	2145	1915	1695	1480
.40	2305	2085	1860	1645	1440
.50	2235	2020	1800	1585	1390
.60	2160	1940	1725	1525	1340
.70	2070	1850	1640	1460	1220

E.I.R. EXHIBIT 6
MFR Lennox
DATE 1/8/20 INSPECTOR 35W

LENNOX®

G16R AND G16RX — CONSERVATOR® III
DOWN-FLO GAS FURNACES
50,000 to 125,000 Btuh Input
Add-On Cooling — 2 thru 5 nominal Tons

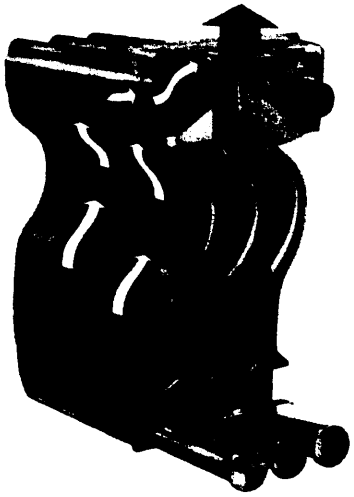

Lennox DURACURVE®
Aluminized Steel
Heat Exchanger

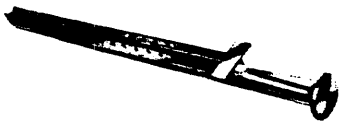

Aluminized Steel Burners

Down-Flo Gas Furnaces are Engineered For High Efficiency, Ease of Installation and Long Service Life

The G16R line of gas fired down-flo furnaces include models (natural gas or LPG) with Btuh input capacities of 50,000, 75,000, 100,000, 125,000 and energy efficiencies (AFUE) of 80% or above. These down-flo furnaces are designed for installations with the distribution duct work installed under the floor or tunneled into a concrete slab floor. Units can be installed in a family or recreation room, utility room or closet.

Traditional Lennox quality is evident in the rugged cabinet with a durable finish of baked-on enamel. Large removable front panels provide complete access for service. Powerful blowers have sufficient capacity to handle air volume requirements for additive cooling. A Lennox direct expansion evaporator unit and remote condensing unit, electronic air cleaner and power humidifier can easily be added to the down-flo gas unit for a complete all season installation.

Units are equipped with the gas saving automatic electronic pilot ignition system. Pilot flame is on only during main burners operating cycles. No need to shut off pilot during air conditioning season. Flue draft will be created by a induced draft blower mounted on the flue collector box on the outlet of the heat exchanger. The furnaces can be vented vertically as a common vent with another appliance.

G16R series furnaces are design certified by A.G.A. Laboratories and ratings are certified by GAMA. Units have been rated and tested according to Department of Energy (DOE) test procedures and Federal Trade Commission (FTC) labeling regulations in the Lennox Research Laboratory. G16RX (natural gas) models meet the California Nitrogen Oxides (NO_X) Standards and California Seasonal Efficiency requirements. Blower data is from unit tests conducted in the Lennox Laboratory air test chamber.

Units are shipped factory assembled with all controls installed. Each unit is factory test operated insuring proper operation. Installer has only to make flue vent, gas supply and electrical connections.

Typical Applications

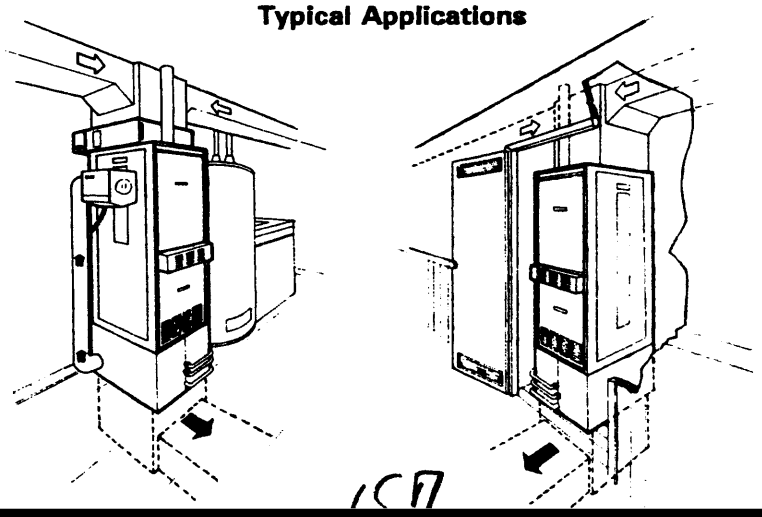

FEATURES

Lennox DURACURVE® Aluminized Steel Heat Exchanger — Lennox developed and proven heat exchanger eliminates fatigue failure, ticking, resonance and cleanability problems. In the unique design of this heat exchanger the sides of the clam section form a flue restriction zone comprised of two concentric cylinders. As the sides grow they expand and move, but in the same direction and at the same rate. The result is perfect combustion, proper venting and absolute freedom of movement for the metal. Design also results in high input to heat surface ratio, low resistance to air travel reducing blower horsepower requirements and ease of cleaning. Heavy gauge aluminized steel construction provides long service life. Laboratory life cycle testing proves long life of heat exchanger.

Rugged Trim Cabinet — Constructed of heavy gauge cold rolled steel. Cabinet is subject to a five station metal wash process resulting in a perfect bonding surface for a paint finish of baked-on enamel. The paint solution and metal are given opposite electrical charges resulting in positive adhesion and even coverage of the paint to the metal surfaces. Interior metal liners and foil faced fiberglass insulation keep outer cabinet surface temperatures low. Complete service access is accomplished by removing furnace and blower compartment doors and access panels. Safety interlock switch located in the blower compartment automatically turns power off to the unit when access panel is removed. Blower assembly may be completely removed from unit for service. Gas piping and electrical inlet knockout are provided in both sides of cabinet. Return air opening is flanged for ease of duct connection. Supply air plenum opening matches the supply air opening in add-on Lennox down-flo evaporator coils.

Steel Burners — Each burner has four rows of practically continuous ports which result in quiet and clean combustion. A crossover igniter of burner ports, perpendicular to the main burner, carries a positive flame from burner to burner to achieve quiet and sure ignition.

Induced Draft Blower — Factory installed induced draft blower prepurges heat exchanger and safely vents combusion products. Operates only during heat demand cycle. A pressure switch prevents unit operation in case of blockage of combustion air or flue outlet.

Fan and Limit Controls — Factory installed and accurately located. Fan control has adjustable temperature setting. Limit controls (dual) have fixed temperature setting and are located in furnace and blower section. Protects unit in case of abnormal operating conditions.

Wiring Junction Box — Power supply and thermostat wiring connections are made at the wiring junction box which is located on the furnace vestibule panel. Provisions have been made in the box for additional wiring connections required for power humidifiers and electronic air cleaners. Low voltage terminal strip is furnished.

Transformer — 24 volt control transformer is furnished as standard equipment and is factory installed in wiring junction box.

Blower Cooling Relay — Furnished as standard equipment and factory installed in the wiring junction box. Relay activates blower operation during cooling cycle.

Powerful Blowers — Units are equipped with quiet variable speed direct drive blowers. Each blower assembly is statically and dynamically balanced. Multiple-speed motor is resiliently mounted. A choice of blower speeds is available on each blower. See blower performance charts. Change in blower speed is easily accomplished by simple wiring change.

Cleanable Air Filter — Washable or vacuum cleanable frame type filter is furnished as standard. Polyurethane media is coated with oil for maximum efficiency. Filters for G16RQ4/5(X)-125 model field install in the return air plenum. See dimension drawing. Filter mounting rack and installation instructions are furnished.

Automatic Gas Controls & Electronic Pilot Ignition — Silent operating gas controls provide 100% safety shut off. 24-volt redundant combination gas control valve combines automatic safety pilot, manual shut-off knob (On-Off), pilot gas filtration, automatic electric valve (dual) and gas pressure regulation into a compact combination control. Dual valve design provides double assurance of 100% close off of gas to the pilot and main burners on each off cycle. Solid-state electronic direct spark igniter provides positive ignition of pilot burner on each operating cycle. Pilot gas is ignited and burns during each running cycle (intermittent pilot) of the furnace. Main burners and pilot gas are extinguished during the off cycle. This system permits main gas valve to open only when the pilot burner is proven to be lit. Should a loss of flame occur the main valve closes and the pilot spark recurs immediately. Pilot ignition is a fully automatic operation on demand for heat.

LPG Conversion Kits (Optional) — For LPG fired models a conversion kit is required for field changeover from natural gas. See specification table.

Down-Flo Additive Base (Optional) — Additive base is required for heating only models installed on combustible floors. Base is not furnished and must be ordered extra for field installation. See specification table. Not required in add-on cooling coil applications.

Thermostat (Not Furnished) — Heating thermostat is optional equipment and must be ordered extra. See Lennox Price Book. For all season applications, a heating-cooling thermostat is available with the condensing unit.

SPECIFICATIONS

Model No.		††G16RQ3X-50 †G16RQ3-50	††G16RQ3X-75 †G16RQ3-75	††G16RQ4X-100 †G16RQ4-100	††G16RQ4/5X-125 †G16RQ4/5-125
Input Btuh		50,000	75,000	100,000	125,000
Output Btuh		41,000	61,000	77,000	100,000
†A.F.U.E.		80.5%	80.0%	80.0%	80.0%
California Seasonal Efficiency		73.5%	73.1%	72.7%	72.1%
Flue size connection (in. diameter)		3	3	3	3
Temperature rise range (°F)		30 — 60	45 — 75	40 — 70	40 — 70
High static certified by A.G.A. (in. wg.)		.50	.50	.50	.50
Gas piping size I.P.S. (in.)	Natural	1/2	1/2	1/2	1/2
	*LPG	1/2	1/2	1/2	1/2
Blower wheel nominal diameter x width (in.)		10 x 7	10 x 8	11 x 9	12 x 12
Blower motor hp		1/3	1/3	1/2	3/4
Number and size of filters (in.)		(2) 10 x 20 x 1	(2) 10 x 20 x 1	(2) 12 x 20 x 1	(2) 16 x 20 x 1
Tons of cooling that can be added		2, 2-1/2 or 3	2, 2-1/2 or 3	3, 3-1/2 or 4	4 or 5
Shipping weight (lbs.)		145	195	228	277
Number of packages in shipment		1	1	1	1
Electrical characteristics		120 volts — 60 hertz — 1 phase — (less than 12 amps)			
*LPG kit (optional)		LB-55207CA (All Models)			
Down-Flo Additive Base (optional)	Part No.	LB-80639BA	LB-80639BA	LB-80639BB	LB-80639BD
	Shipping Weight (lbs.)	6	6	6	6

†Annual Fuel Utilization Efficiency based on D.O.E. test procedures and according to F.T.C. labeling requirements. (Relates to non "X" models only).
*For LPG units a field changeover kit is required and must be ordered extra.
††Not available with LPG.

HIGH ALTITUDE DERATE

Units must be derated when installed at an elevation of 2000 feet or more above sea level. Table shows the derate manifold pressure for high altitude operation with both natural gas and LPG. Operating the unit at manifold pressure specified will insure proper unit heat input at high altitude.

Elevation Above Sea Level (feet)	Manifold Pressure (in. wc)					
	†Heating Value (Btu/ft³) Natural Gas					LPG Only
	900	950	1000	1050	1100	
Sea Level — 0	4.32	3.88	3.50	3.17	2.89	9.00
1000	4.32	3.88	3.50	3.17	2.89	9.00
2000	3.65	3.30	2.95	2.70	2.45	7.61
3000	3.35	3.00	2.70	2.45	2.25	6.97
4000	3.05	2.75	2.45	2.25	2.04	6.35
5000	2.77	2.48	2.25	2.05	1.85	5.76
6000	2.50	2.25	2.00	1.85	1.65	5.20

†Heating value is based on an atmospheric pressure of 30 inches mercury and temperature at 60°F. Consult your gas utility for the local natural gas heating value.
NOTE - This is the only permissible field derate for the units.

A.G.A. INSTALLATION CLEARANCES

Sides	1 inch
Rear	1 inch
Top	1 inch
Front	6 inches
*Floor	Combustible
**Flue	4 inches

*Clearance for installation on combustible floor if optional additive base is installed between the furnace and the combustible floor.
**This clearance is to all vent pipes except type "B". Type "B" vent pipe clearance is listed by U.L.
NOTE — Flue sizing and air for combustion and ventilation must conform to the methods outlined in American National Standard (ANSI-Z223.1) National Fuel Gas Code.

BLOWER DATA

G16RQ3(X)-50 BLOWER PERFORMANCE

External Static Pressure (in. wg)	Air Volume (cfm) @ Various Speeds			
	High	Med-High	Med-Low	Low
0	1335	1265	1105	935
.05	1310	1240	1085	925
.10	1280	1210	1070	915
.15	1255	1185	1055	900
.20	1225	1160	1035	890
.25	1200	1130	1015	875
.30	1175	1100	995	860
.40	1110	1045	950	825
.50	1040	975	895	780
.60	970	900	825	720
.70	900	820	750	650

NOTE — All cfm is measured external to the unit with the air filter in place.

G16RQ3(X)-75 BLOWER PERFORMANCE

External Static Pressure (in. wg)	Air Volume (cfm) @ Various Speeds			
	High	Med-High	Med-Low	Low
0	1315	1225	1085	885
.05	1295	1205	1065	870
.10	1270	1180	1045	855
.15	1240	1150	1025	840
.20	1210	1125	1000	825
.25	1180	1095	980	810
.30	1150	1065	955	790
.40	1080	1000	905	740
.50	1015	935	840	690
.60	945	875	760	600
.70	875	800	675	520

NOTE — All cfm is measured external to the unit with the air filter in place.

G16RQ4(X)-100 BLOWER PERFORMANCE

External Static Pressure (in. wg)	Air Volume (cfm) @ Various Speeds			
	High	Med-High	Med-Low	Low
0	1845	1560	1340	1010
.05	1810	1540	1330	1005
.10	1780	1520	1325	1000
.15	1750	1500	1315	995
.20	1720	1480	1305	990
.25	1685	1460	1290	985
.30	1650	1440	1275	980
.40	1580	1385	1240	955
.50	1500	1325	1190	920
.60	1410	1250	1100	840
.70	1310	1160	1000	770

NOTE — All cfm is measured external to the unit with the air filter in place.

G16RQ4/5(X)-125 BLOWER PERFORMANCE

External Static Pressure (in. wg.)	Air Volume (cfm) @ Various Speeds				
	High	Med-High	Medium	Med-Low	Low
0	2320	2160	1960	1735	1550
.05	2280	2125	1930	1705	1520
.10	2240	2090	1900	1675	1490
.15	2200	2050	1860	1645	1460
.20	2155	2015	1830	1610	1430
.25	2115	1975	1790	1580	1395
.30	2070	1935	1760	1550	1360
.40	1990	1855	1685	1485	1290
.50	1900	1770	1610	1420	1220
.60	1810	1680	1530	1350	1140
.70	1710	1580	1440	1220	1060
.80	1610	1470	1350	1200	980

NOTE — All cfm is measured external to the unit with the air filter in place.

DIMENSIONS (inches)

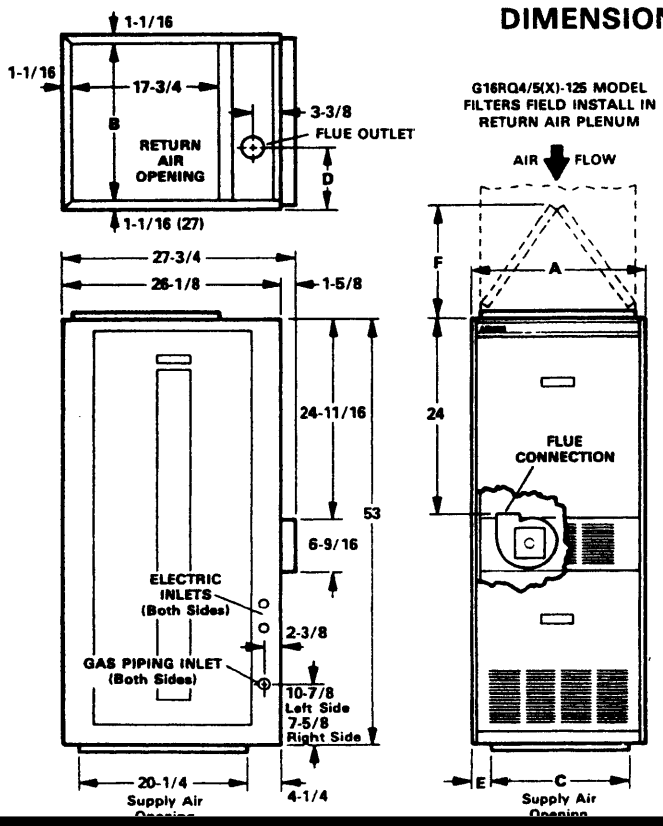

Model No.	A	B	C	D	E	F
G16RQ3(X)-50, G16RQ3(X)-75	16-1/4	14-1/8	12	5	2-1/8	---
G16RQ4(X)-100	21-1/4	19-1/8	17	7-1/2	2-1/8	---
G16RQ4/5(X)-125	26-1/4	24-1/8	20	10	3-1/8	16

NOTE — When heating only unit is installed on a combustible floor an additive base is required. This is optional equipment and must be ordered extra. When using additive base make opening in floor 2-5/8 inches larger (front to rear and side to side) than furnace supply air opening.

E. I. R. EXHIBIT 7
MFR Lennox
DATE 1/8 & 20/87 INSPECTOR 3 SW

installation-operation-maintenance instruction

G16R SERIES UNITS Down Flow

Gas Units
502,128M
8/86
Supersedes 502,034M

LENNOX Industries Inc.

Litho U.S.A.

UNIT DIMENSIONS

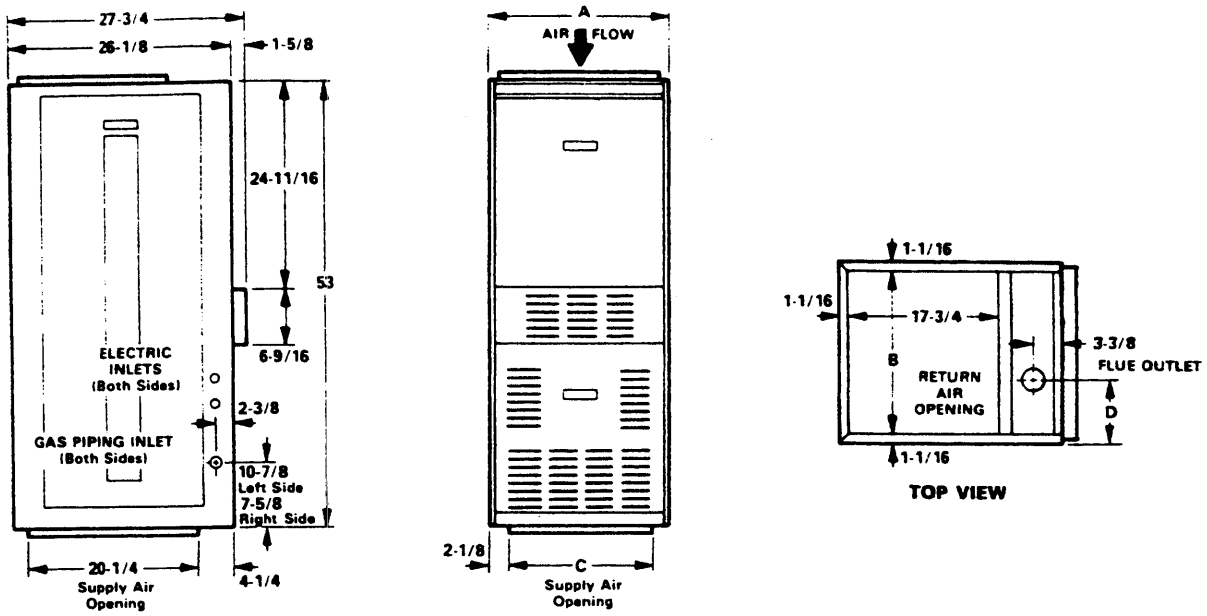

SIDE VIEW

FRONT VIEW

TOP VIEW

MODEL NO.	A		B		C		D	
	in.	mm	in.	mm	in.	mm	in.	mm
G16RQ3-50/75	16-1/4	413	14	356	12	305	5	127
G16RQ4-100	21-1/4	540	19	483	17	432	7-1/2	191
G16RQ4/5-125	26-1/4	667	24-1/8	616	20	508	10	254

CHECK POINTS

START-UP AND PERFORMANCE CHECK LIST

Job Name _____ Job No. _____ Date _____
Job Location _____ City _____ State _____
Installer _____ City _____ State _____
Unit Model No. _____ Serial No. _____ Serviceman _____

HEATING SECTION

Electrical Connections Tight? ☐
Supply Voltage _____ Blower Motor Amps _____
Blower Motor H.P. _____
Blower Motor Lubrication O.K.? ☐
Gas Piping Connections Tight & Leak-Tested ☐
Fuel Type: Natural Gas? ☐ LP Gas? ☐
Furnace BTU Input _____
Line Pressure (7" Natural Gas or 11" LP Gas) _____

Regulator Pressure (3.5" w.c., Nat.; 9.0" w.c., LP) _____
Air Shutters Properly Adjusted (if installed)? ☐
Flue Connections Tight? ☐ Proper Draft? ☐
Fan Control Setting (90° Factory Setting) _____
Limit Control Cutout _____ Temperature Rise _____
Filters Clean & Secure? ☐ Vent Clear? ☐
Pressure Switch Operating? ☐ Return Air Opening Sealed? ☐
Combustion Air Clearances Maintained? ☐

THERMOSTAT

Calibrated? ☐ Heat Anticipator Properly Set? ☐ Level? ☐

REQUIREMENTS

Installation of Lennox gas central furnaces must conform with local building codes or, in the absence of local codes, with the National Fuel Gas Code (ANSI-Z223.1-1984).

Code is available from:

American National Standards Institute, Inc.
1430 Broadway
New York, NY 10018

These units are A.G.A. (American Gas Association) design certified.

NOTE - G16RX series units (units equipped with flame rods) are design certified for use with natural gas only.

Air supply for combustion and ventilation must conform to the methods outlined in National Fuel Gas Code.

The furnace is certified for installation clearances to combustible material as listed on the appliance rating plate and the following table:

CLEARANCES		
Clearances	**Location**	**Inches (mm)**
Service access	Front	36 in. (914 mm)
To combustible materials	Top, Side and Rear	1 in. (25 mm)
	Flue	4 in. (102 mm)
Around combustion chamber air opening	Front	6 in. (152 mm)

NOTE - When unit is installed on a combustible floor, an additive base (ordered extra) must be installed between the furnace and floor.

Accessibility and service clearances must take precedence over fire protection clearances.

For installation in a residential garage, unit must be installed so that burner(s) and ignition source are located no less than 18 in. (457 mm) above floor. Furnace must be located or protected to avoid physical damage by vehicles.

Unit must be adjusted to obtain a temperature rise within the range specified on appliance rating plate.

When furnace is used in conjunction with cooling units, it shall be installed in parallel with, or on the upstream side of, cooling units to avoid condensation in the heating element. With a parallel flow arrangement, damper (or other means to control the flow of air) shall be adequate to prevent chilled air from entering the furnace and, if manually operated, must be equipped with means to prevent operation of either unit, unless damper is in the full "heat" or "cool" position.

When installed, furnace must be electrically grounded in accordance with local codes or, in the absence of local codes, with the National Electric Code, ANSI/NFPA No. 70-1984, if an external electrical source is utilized. The National Electric Code (ANSI/NFPA No. 70-1984) is available from:

National Fire Protection Association
470 Atlantic Avenue
Boston, MA 02210

Field wiring connection with unit must meet or exceed specifications of type T wire and withstand a 63°F (35°C) temperature rise.

When furnace is installed so that supply ducts carry air circulated by furnace to areas outside space containing furnace, return air shall be handled by a duct(s) sealed to the furnace casing and terminating outside space containing furnace.

INSTALLATION

SHIPPING LIST

1 - Thermostat (if ordered)
1 - Plastic grommet (for electrical make-up)

SHIPPING DAMAGE

Check unit for shipping damage. Receiving party should contact the last carrier immediately if any shipping damage is found.

SETTING EQUIPMENT

Unit installs in three ways: on non-combustible flooring, on combustible flooring using an additive base or on a reverse-flow cooling cabinet. Take care when moving unit into place; supply air opening flanges can be damaged if unit is dragged across floor.

Set unit as follows:

A - Installation on Non-Combustible Flooring

1 - Cut floor opening keeping in mind the clearances listed on unit rating plate. Also keep in mind gas supply connections, electrical supply, flue connections and sufficient installation and servicing clearances. See table 1 for correct floor opening size.
2 - Flange warm air plenum and lower into opening.
3 - Set unit over plenum.
4 - Check to see that an adequate seal is made.

TABLE 1
NON-COMBUSTIBLE FLOOR

Unit	Front to Rear		Side to Side	
	in.	mm	in.	mm
G16RQ3-50/75	20-1/2	521	12-1/4	311
G16RQ4-100	20-1/2	521	17-1/4	438
G16RQ4/5-125	20-1/2	521	22-1/4	565

NOTE — Floor opening dimensions listed are 1/4" (6 mm) larger than unit openings.

B - Installation on Combustible Flooring

1 - When unit is installed on a combustible floor, an additive base (ordered extra) must be installed between the furnace and floor. See table 2 for opening size to cut in floor.

TABLE 2
ADDITIVE BASE FLOOR OPENING

Unit	Front to Rear		Side to Side	
	in.	mm	in.	mm
G16RQ3-50/75	22-7/8	581	14-5/8	371
G16RQ4-100	22-7/8	581	19-5/8	498
G16RQ4/5-125	22-7/8	581	24-5/8	625

NOTE — Floor opening dimensions listed are 1/4" (6 mm) larger than unit openings.

2 - After opening is cut, set additive base into opening.

162

3 - Check fiberglass strips on additive base to make sure they are properly glued and positioned.
4 - Lower supply air plenum into additive base until plenum flanges seal against fiberglass strips.
5 - Set unit on additive base so unit flanges drop into plenum. Refer to figure 1.

NOTE — Be careful not to damage fiberglass strips. Check for a tight seal.

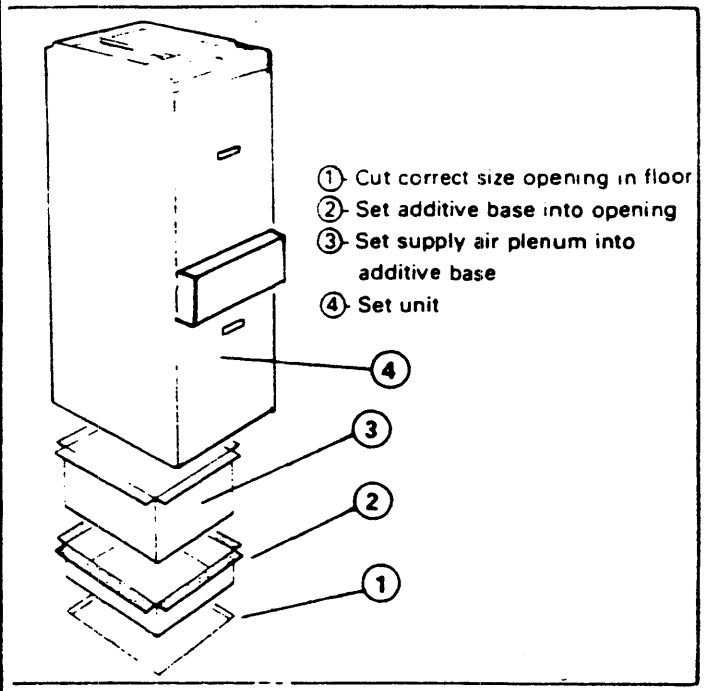

FIGURE 1

C - Installation on Cooling Cabinet

1 - Refer to reverse flow coil installation instructions for correctly sized opening in floor and installation of cabinet.
2 - When cooling cabinet is in place, install furnace so flanges drop inside cabinet opening.
3 - Seal cabinet and check for air leakage.

RETURN AIR OPENING

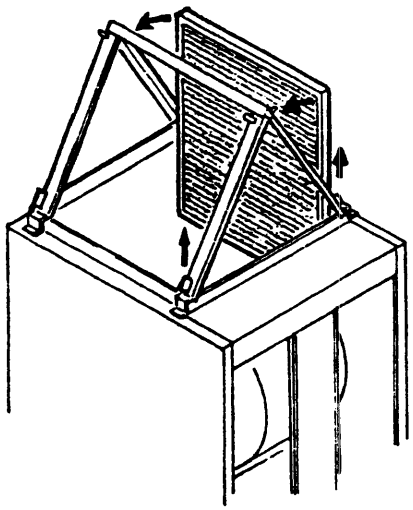

G16RQ4/5-125 FILTER RACK

FIGURE 2

G16RQ4/5-125 UNITS ONLY-Before installing return air plenum, assemble filter rack (provided) and secure it to return air opening. Install slab filters through open vestibule panels. See figure 2. Filter rack and filters are shipped in blower compartment.

The following steps should be taken when installing plenum:

1 - Bottom edge of plenum should be flanged with a hemmed edge (See figure 3).
2 - Fiberglass sealing strips should be used.
3 - In all cases, plenum should be secured to top flanges of furnace with sheet metal screws.

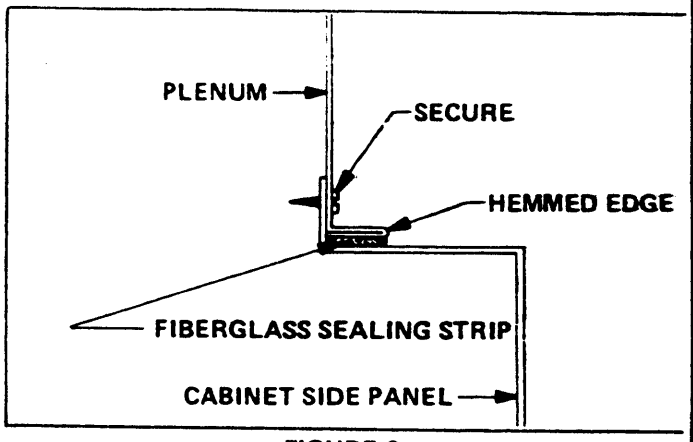

FIGURE 3

4 - In closet installations, it may be impossible to install sheet metal screws from the outside. In this case, make plenum with a removable front and install screws from the inside (See figure 4).

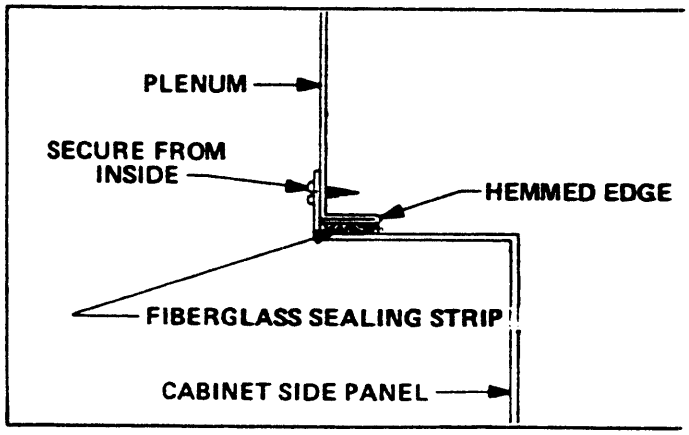

FIGURE 4

DUCT SYSTEM

Size and install the supply and return system using industry-approved standards that result in a quiet and low-static system with uniform air distribution.

FLUE TRANSITION

Flue transition and air shutter plate are factory installed. Air shutter plate is field-adjustable to provide maximum efficiency. G16R units require a separate 2 ft. (610 mm) section of 3-inch pipe running from the flue transition to the furnace flue outlet at the top of the unit cabinet. Secure the vent connector or vent pipe to this section of pipe at the furnace flue outlet and seal with aluminum foil tape (See figure 5).

163

the highest vent connection point (See figure 6). Single-wall pipe and type B-1, double-wall pipe used as vertical vent do not need to be sealed.

d - Clearances to combustible materials are 4 in. (102 mm) for single-wall vent pipe and 1 in. (25 mm) for type B-1, double-wall vent pipe.

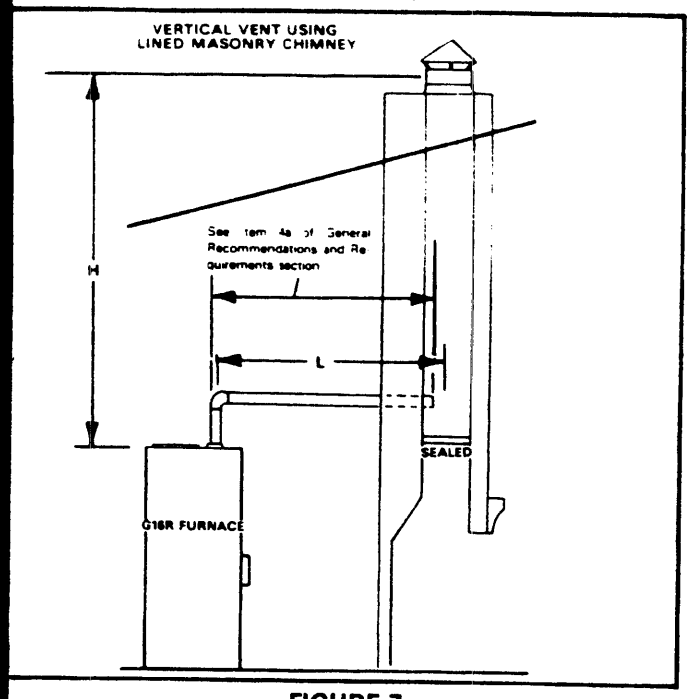

FIGURE 7

5 - All vent pipe passing through floors, ceilings and walls must be fire-stopped according to the requirements of the National Fuel Gas Code (ANSI-Z223.1-1984). Refer to figure 8.

6 - Vent pipe must be rigidly supported with hangers and straps to prevent movement after installation. Vent pipe must be supported for the design and weight of the material used to maintain clearances and to prevent physical damage.

7 - No portion of any G16R series venting should extend into, or pass through, any circulating air duct or plenum.

8 - All vertical vent terminations must be located per the National Fuel Gas Code (ANSI-Z223.1-1984) and all applicable local codes.

9 - All vertical vents must be terminated with a U.L.-listed vent cap or rain shield assembly unless local codes require otherwise.

VENT ARRANGEMENTS

The possible vent arrangements for G16R series furnaces are outlined below:

Vertical Venting (See figure 6)

G16R furnaces may be vented vertically either as a single appliance or as a common vent with multiple gas-fired appliances. For a dedicated vent, single-wall vent pipe, type B-1 double-wall vent pipe or a lined masonry chimney may also be used. In all cases, the vent or chimney must be sized and installed per the requirements of the National Fuel Gas Code (ANSI-Z223.1-1984). Table 4 can be used to size type B, double-wall vents serving two or more appliances.

CAUTION - Common vents serving G16 and G16R units cannot be used to vent more than three appliances. It is permissible to vent two G16R units with one other gas-fired appliance or two other appliances and one G16R unit. Do not use a common vent for three G16 or G16R units.

TABLE 3
Sizing Type B, Double-Wall Vents with Type B, Double-Wall Vent Connectors Serving a Single Appliance

Height H	Lateral L	Vent Diameter — D 3"	4"	5"	6"
		Maximum Appliance Input Rating in Thousands of Btu Per Hour			
6'	0	46	86	141	205
	2'	36	67	105	157
	6'	32	61	100	149
	12'	28	55	91	137
8'	0	50	94	155	235
	2'	40	75	120	180
	8'	35	66	109	165
	16'	28	58	96	148
10'	0	53	100	166	255
	2'	42	81	129	195
	10'	36	70	115	175
	20'	NR	60	100	154
15'	0	58	112	187	285
	2'	48	93	150	225
	15'	37	76	128	198
	30'	NR	60	107	169
20'	0	61	119	202	307
	2'	51	100	166	249
	10'	44	89	150	228
	20'	35	78	134	206
	30'	NR	68	120	186
30'	0	64	128	220	336
	2'	56	112	185	280
	20'	NR	90	154	237
	40'	NR	NR	NR	200
40'	0	66	132	228	353
	2'	59	118	198	298
	20'	NR	96	167	261
	40'	NR	NR	NR	223

NR indicates not recommended.

TABLE 4
Sizing Type B, Double-Wall Vents Serving Two or More Appliances

Total Vent Height "H"	Common Vent Diameter 3"	4"	5"	6"	7"	8"
	Combined Appliance Input Rating in Thousands of Btu Per Hour					
6'	—	65	103	147	200	260
8'	—	73	114	163	223	290
10'	—	79	124	178	242	315
15'	—	91	144	206	280	
20'	—	102	160	229	310	
30'	—	118	185	266		
40'	—	131	203	295		

INSTALLATION CONT.

The following requirements apply to vertical venting in addition to those outlined in the general recommendations section:

a - The vent connector from the furnace flue outlet to the vertical vent may be either single-wall vent pipe with a diameter of 3 in. (76 mm) or larger or type B-1, double-wall pipe. The vent connector must be sealed according to item 3 of the general recommendations section.

IMPORTANT - When G16R venting is shared with other gas appliances, vent connectors for all other appliances must be joined to the vent at least 4 in. (102 mm) above the highest G16R or G16 connection (See figure 6). If G16R is vented with another G16R or G16 unit, there must be a four-inch (102 mm) vertical separation between the vent connectors. Do not attach G16R or G16 vent connector to the bottom of the common vent.

CAUTION - In a common venting situation, horizontal vent pipe runs are not permissible beyond the point that the vent connectors reach the vent pipe. See figure 6 for correct application.

b - See general recommendations section, item 4, for permissible vent connector lengths.

c - Any masonry chimney to be used for venting a G16R series gas furnace must be lined, and must be sized and installed per the National Fuel Gas Code (ANSI-Z223.1-1984) and all applicable local codes.

NOTE - When inspection reveals that an existing chimney is not safe for the intended purpose, it shall be rebuilt to conform to nationally recognized standards, lined or relined with suitable materials, or replaced with a vent or chimney suitable for venting the G16R unit. The chimney passageway must also be inspected to make sure that it is clear and free of obstructions.

d - Masonry chimneys serving fireplaces cannot be used for venting purposes unless the fireplace opening is permanently sealed (See figure 7).

e - When sizing the dedicated vertical vent per the requirements of the National Fuel Gas Code (ANSI-Z223.1-1984), it is recommended that the diameter of type B-1, double-wall vent pipe does not exceed 6 inches (152 mm). Vent pipe sized for common venting applications should not exceed 8 inches (203 mm).

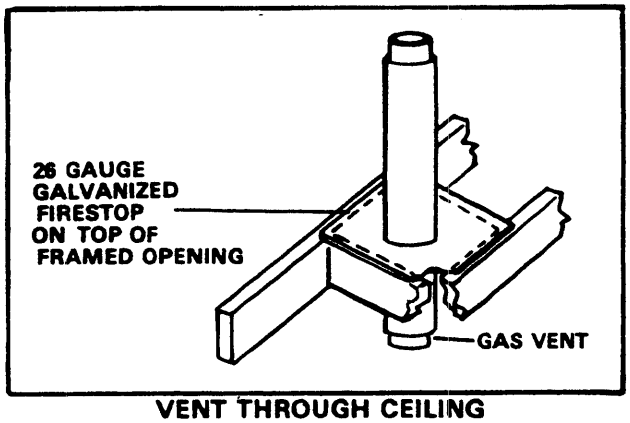

VENT THROUGH CEILING

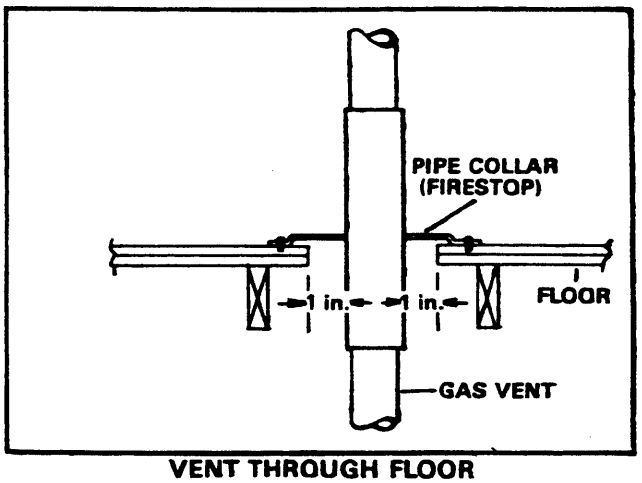

VENT THROUGH FLOOR

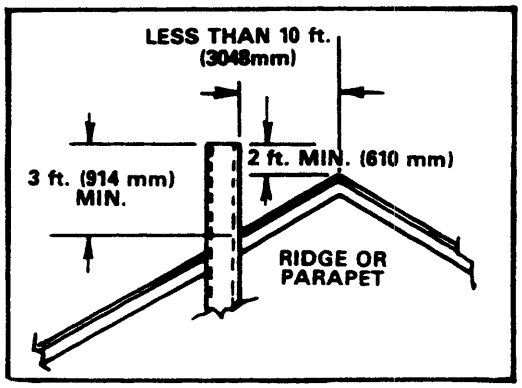

VENT THROUGH ROOF

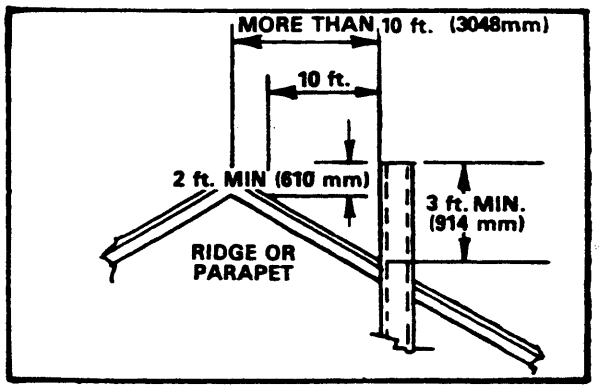

VENT THROUGH ROOF

FIGURE 8

165

GAS PIPING

GAS SUPPLY

1 - This unit is shipped standard for left side installation of piping. Simply connect gas supply to piping assembly.

2 - A piping hole is also fabricated in the right side of unit for an alternate piping arrangement.

3 - When connecting gas supply, the length of run from the meter must be considered in determining pipe size to avoid excessive pressure drop. For correct sizing of gas delivering piping, consult the utility having jurisdiction. A drip leg should be installed in the vertical pipe run to unit.

NOTE - Installer must provide a 1/8" N.P.T. plugged tapping in field piping upstream of gas supply connection to unit. Tapping must be accessible for test gauge connection (See figure 9).

In some localities, codes may require installation of a manual main shut-off valve and union (furnished by installer) external to unit. Union must be of the ground joint type.

NOTE - Compounds used on threaded joints of gas piping must be resistant to the actions of liquified petroleum gases.

HIGH ALTITUDE DERATE

This appliance must be derated when installed at an elevation of 2,000 ft. (610 m) or more above sea level. Tables 5 and 6 show the derated manifold pressure for high altitude operation with both natural gas and LP gas. Operating this appliance at the manifold pressure specified on the tables will ensure proper unit heat input at high altitude. Consult your gas utility for the local natural gas heating value.

NOTE-This is the only permissible field derate for this appliance.

TABLE 5
High Altitude Manifold Pressure Derate for Natural Gas Units

ALTITUDE (FT.)	*HEATING VALUE (BTU/FT³)				
	900	950	1000	1050	1100
0	4.32" wc	3.88" wc	3.5" wc	3.17" wc	2.89" wc
1000	4.32" wc	3.88" wc	3.5" wc	3.17" wc	2.89" wc
2000	3.65" wc	3.30" wc	2.95" wc	2.70" wc	2.45" wc
3000	3.35" wc	3.00" wc	2.70" wc	2.45" wc	2.25" wc
4000	3.05" wc	2.75" wc	2.45" wc	2.25" wc	2.04" wc
5000	2.77" wc	2.48" wc	2.25" wc	2.05" wc	1.85" wc
6000	2.50" wc	2.25" wc	2.00" wc	1.85" wc	1.65" wc

**Heating value based on atmospheric pressure of 30" mercury and temperature of 60°F (16°C).*

TABLE 6
High Altitude Manifold Pressure Derate for LP Gas Units

ALTITUDE (FT.)	0	1000	2000	3000	4000	5000	6000
MANIFOLD PRESSURE	9.0"wc	9.0"wc	7.61"wc	6.97"wc	6.35"wc	5.76"wc	5.20"wc

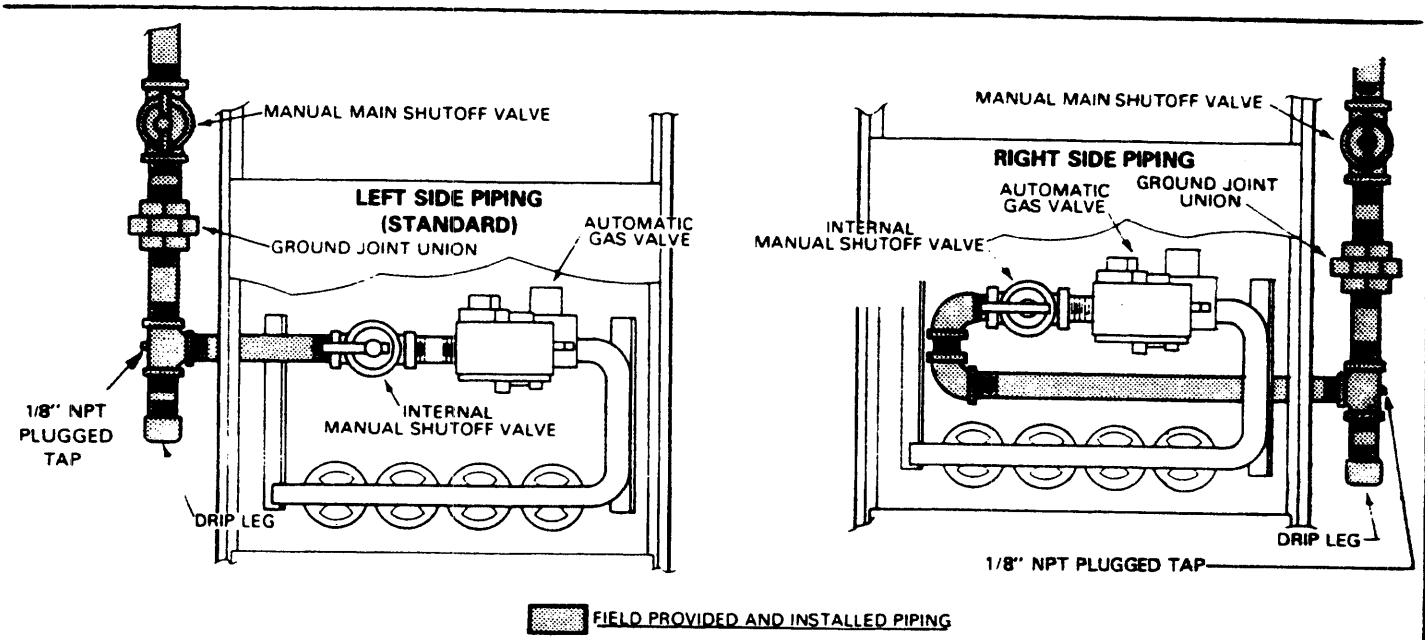

FIGURE 9

166

GAS PIPING CONT

LEAK CHECK

After gas piping is completed, carefully check all piping connections (factory and field) for gas leaks. Use a soap solution or other preferred means.

CAUTION - DO NOT USE MATCHES, CANDLES, FLAME OR OTHER SOURCES OF IGNITION TO CHECK FOR GAS LEAKS.

NOTE - In case emergency shutdown is required, shut down main manual gas valve and disconnect main power to unit. These devices should be properly labeled by installer.

IMPORTANT - When testing pressure of gas lines, furnace must be disconnected and isolated (See figure 10). Gas valves can be damaged if subjected to more than 1/2 psig (3.48 kPa).

The furnace must be isolated from the gas supply system by closing its individual manual shut-off valve during any pressure testing of the gas supply system at pressures equal to or less than 1/2 psig (3.48 kPa).

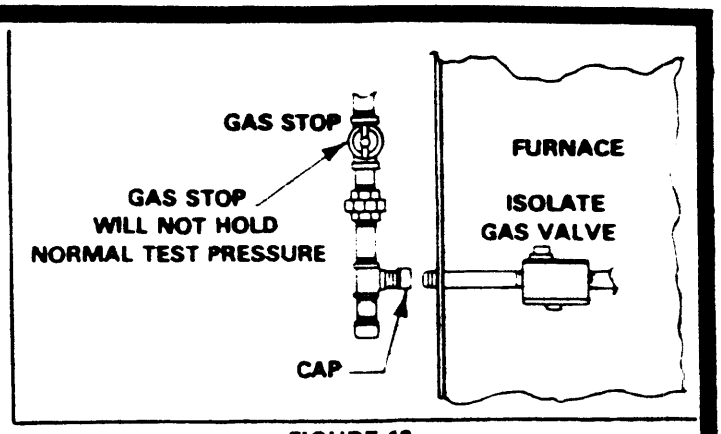

FIGURE 10

G16RX SERIES UNITS

IMPORTANT- G16RX series units (units equipped with flame rods) are approved for use with natural gas only.

ELECTRICAL

1 - Select fuse and wire size according to blower motor amps.
2 - Snaphole plugs are provided on both sides of cabinet to facilitate wiring.
3 - Install room thermostat according to instruction provided with thermostat.
4 - Install unit disconnect switch per local codes.
5 - Complete wiring connections to equipment using provided wiring diagrams.
6 - Electrically ground unit in accordance with local codes or, in the absence of local codes, in accordance with the National Electric Code (ANSI/NFPA No. 70-1984).

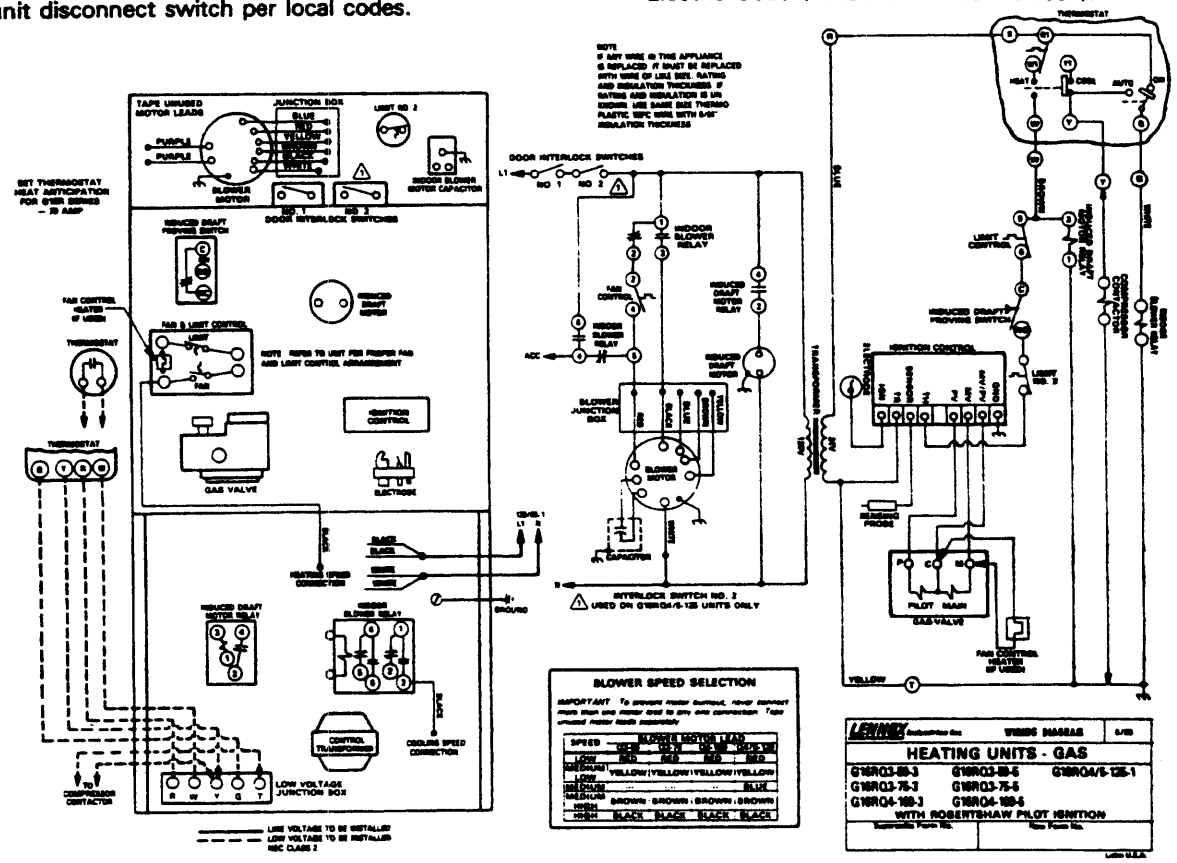

167

ELECTRICAL CONT.

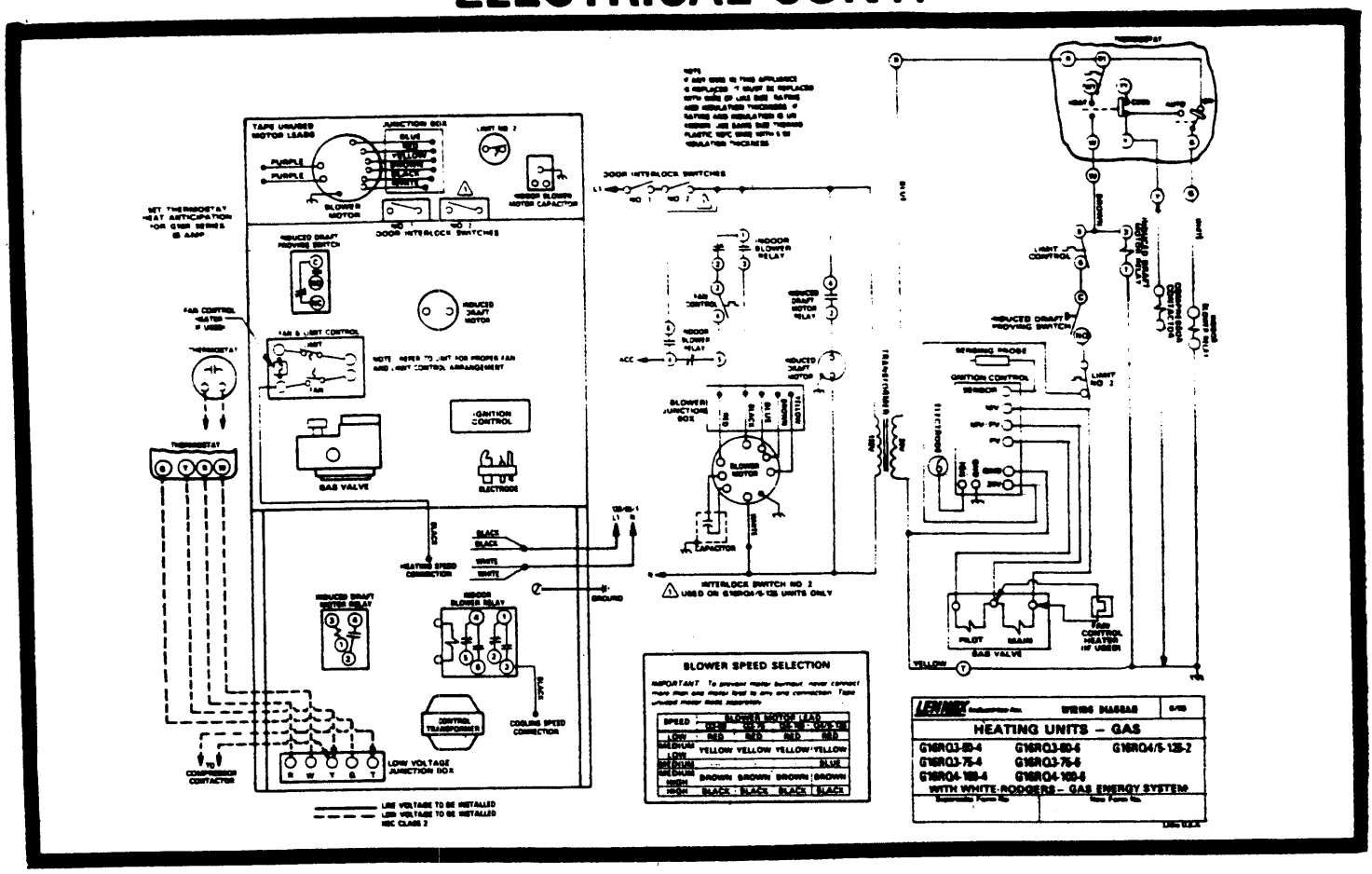

168

START-UP AND ADJUSTMENTS

START-UP

This unit is equipped with an intermittent pilot ignition system. Do not attempt to manually light pilot. Each time thermostat calls for heat, an electric spark ignites the pilot. The pilot does not burn when there is no call for heat.

To place furnace in operation:

*1 - With thermostat set below room temperature and power to furnace off, turn manual knob of gas valve clockwise to OFF position. WAIT 5 MINUTES.

2 - Turn manual knob of gas valve counterclockwise to ON position. Turn power on and set thermostat above room temperature.

3 - If pilot does not light, repeat above instructions.

4 - Set thermostat to desired room temperature.

To shut off furnace:

1 - Set thermostat to its lowest temperature and turn power supply to furnace off.

*2 - Turn manual knob of the gas valve clockwise to off.

*On some gas valves, the manual knob must be depressed to turn OFF.

FAN/LIMIT CONTROL

Limit Control - Factory set: No adjustment necessary.

Fan Control - Factory set: ON - 115°F (46°C)
OFF - 90°F (32°C)

GAS FLOW

To check for proper gas flow to combustion chamber, determine Btu output from appliance rating plate. Divide this input rating by the Btu per cubic feet of available gas. The result is the required number of cubic feet per hour. Determine the flow of gas through gas meter for 2 minutes and multiply by 30 to get the hourly flow of gas to burner.

NOTE - Electric ignitions consume 3 watts when in stand-by mode.

GAS PRESSURE

1 - Check gas line pressure with unit firing at maximum rate. A minimum of 7 in. (178 mm) w.c. for natural gas or 11 in. (279 mm) w.c. for LP gas should be maintained.

2 - After line pressure has been checked and adjusted, check regulator pressure. Correct manifold pressure for LP gas is 9.0 in. (229 mm) w.c. Correct regulator pressure for natural gas is 3.5 in. (89 mm) w.c.

TEMPERATURE RISE

Check temperature rise and, if necessary, adjust blower speed to maintain temperature rise within range shown on unit rating plate.

AIR SHUTTER (Does not include G16RX MODELS)

Air shutter plate is field-adjustable to provide maximum output efficiency. Adjust air shutter plate as follows:

1 - Start unit. After 15 minutes of normal unit operation at nameplate input, measure the concentration of CO_2 in the flue products. This measurement should be taken 3 to 6 inches above the unit flue outlet in the vent connector. The concentration of CO_2 is the flue products for maximum output efficiency should be 8.4 to 8.6 percent at nameplate input.

2 - If the operating concentration of CO_2 in the flue products does not fall within this range, loosen the flue transition securing screws and adjust the air shutter (See figure 11). Adjust the shutter toward the back of the unit to reduce the CO_2 concentration and toward the front to increase concentration.

3 - Tighten the securing screws and repeat measurement process.

CAUTION - Do not over-torque flue transition securing screws. Blower housing engaging holes may strip.

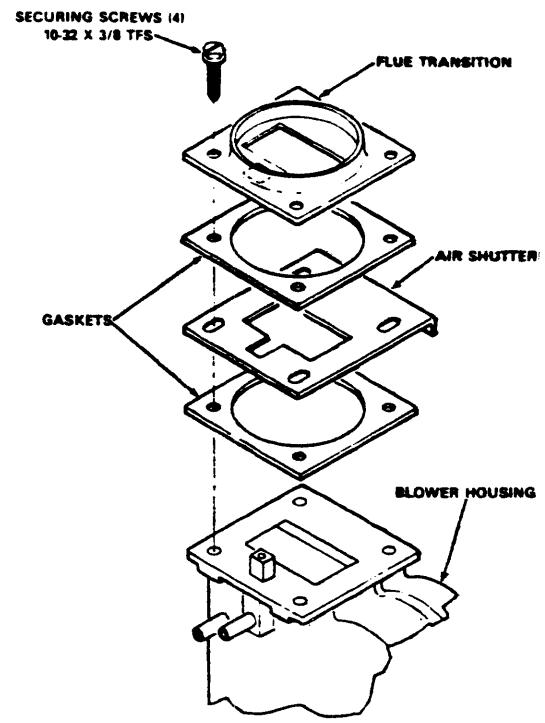

FLUE TRANSITION AND AIR SHUTTER ASSEMBLY

FIGURE 11

ELECTRICAL

1 - Check all wiring for loose connections.

2 - Check for correct voltage at unit (unit operating).

3 - Check amp-draw on blower motor. Motor Nameplate _____
Actual _____

FLUE AND CHIMNEY

1 - Check flue pipe, chimney and all connections for tightness and to make sure there is no blockage.

2 - Check unit for proper draft.

THERMOSTAT ANTICIPATION

G16R Series Units (Robertshaw) .....0.70 amp
G16R Series Units (White-Rodgers-GEI).....0.85 amp

BLOWER SPEEDS

Multi-tap drive motors are wired for different heating and cooling speeds. Speed may be changed by simply interchanging motor connections at indoor blower junction box in blower compartment and fan control. Refer to speed selection chart on unit wiring diagram.

CAUTION - To prevent motor burnout, never connect more than one (1) motor lead to any one connection. Tape unused motor leads separately.

169

START UP AND ADJUSTMENTS CONT.

FAILURE TO OPERATE

If unit fails to operate check the following:

1 - Is thermostat calling for heat?
2 - Is main disconnect switch closed?
3 - Is there a blown fuse?
4 - Is filter dirty or plugged? Dirty or plugged filters will cause unit to go off on limit control.
5 - Is gas turned on at meter?
6 - Is internal manual shut-off valve open?
7 - Is pressure switch closed? Obstructed flue will cause unit to shut off at pressure switch. Check flue passages and outlet.

PILOT AND BURNER FLAME

1 - Pilot Flame - Pilot flame must surround the end of flame sensor for proper operation of pilot safety circuit.

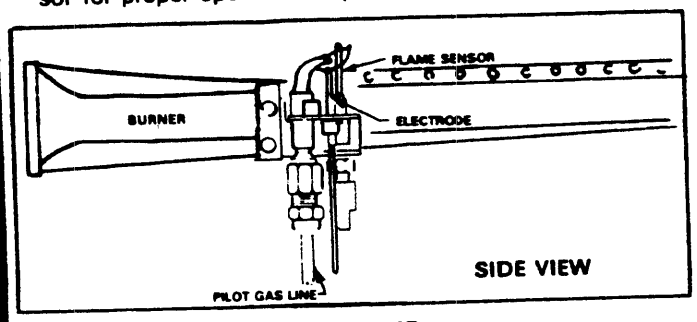

PILOT FLAME

CAUTION - Check pilot flame and burner flame periodically to ensure proper operation.

2 - Burner Flame - Start burner and allow to operate for a few minutes to establish normal burning conditions. Check burner flame by observation. Flame should be predominantly blue in color, strong in appearance and should rise directly from the burner ports in the heat exchanger. Check to see that flame is burning from all continuous ribbon ports and that flame does not impinge on the sides of the heat exchanger.

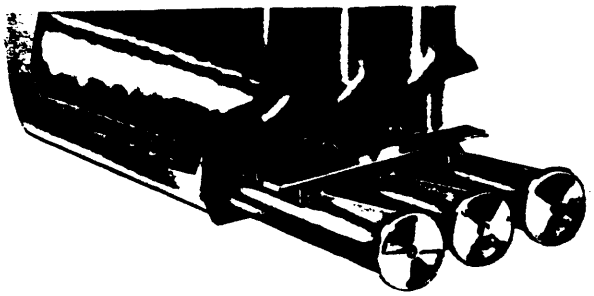

BURNER FLAME

SERVICE

At the beginning of each heating season, the system should be checked as follows:

BLOWER

Check and clean blower wheel. Lubricate blower motor. Refer to lubrication information on blower access panel.

FLUE AND CHIMNEY

1 - Check flue pipe, chimney and all connections for tightness and to make sure there is no blockage.
2 - Check induced draft blower for proper operation. Also check pressure switch connections and pressure taps.

ELECTRICAL CHECK

1 - Check all wiring for loose connections.
2 - Check for correct voltage at unit (unit operating).
3 - Check amp-draw on blower motor. Motor Nameplate _____ Actual _____

FILTERS

G16R series units are equipped with permanent foam filters which should be inspected monthly and cleaned when necessary to assure proper furnace operation.

Filter Removal — G16RQ3-50/75 (Figure 12)

1 - Turn off electrical power at unit disconnect switch.
2 - Remove blower access panel and right vestibule panel.
3 - Remove securing spring from slotted center support tab and right filter rail.
4 - Using slotted center support tab as a handle, slide right filter slightly left to clear right filter rail. Slide filter downward to the right, below filter rail and around blower and remove filter from cabinet.
5 - Remove left filter by lifting filter up and around blower and out right vestibule opening.
6 - Clean filters as outlined and replace.
IMPORTANT - When plastic-framed foam filters are used, left filter must be positioned in the unit so that the larger rectangles in the filter pattern rest on the left support angle. The smaller rectangles should point toward the top of the unit. This positioning will prevent left filter from falling during operation.

170

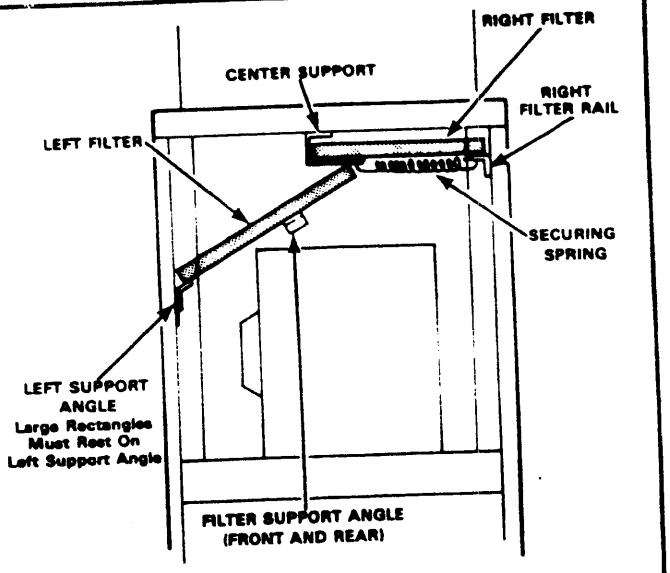

G16RQ3-50/75

FIGURE 12

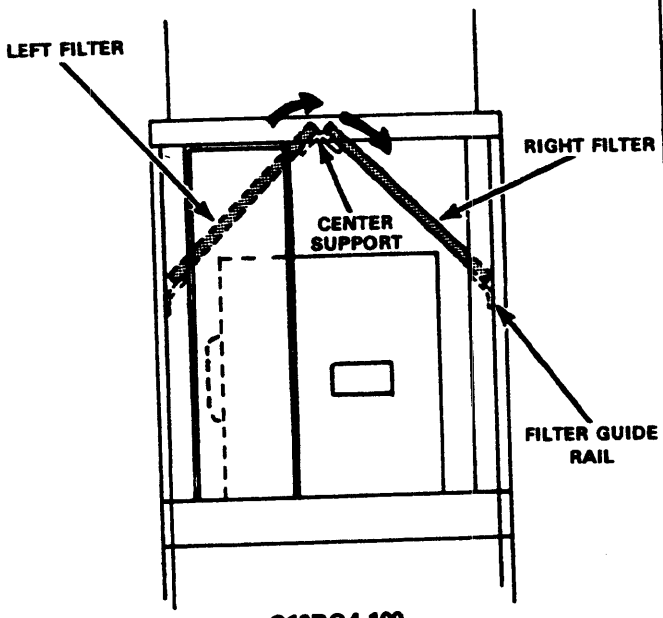

G16RQ4-100

FIGURE 13

Filter Removal — G16RQ4-100 (Figure 13)

1 - Turn off electrical power at unit disconnect switch.
2 - Remove blower access panel and right vestibule panel.
3 - Remove right filter by pushing up and around filter guide rail.
4 - Slide left filter over center support and remove from right side of cabinet.
5 - Clean filters as outlined and replace.

Filter Removal — G16RQ4/5-125 (Figure 14)

1 - Turn off electrical power at unit disconnect switch.
2 - Remove blower access panel and vestibule panels.
3 - Push right filter up into vertical position and pull down and out through blower compartment. Repeat procedure with left filter.

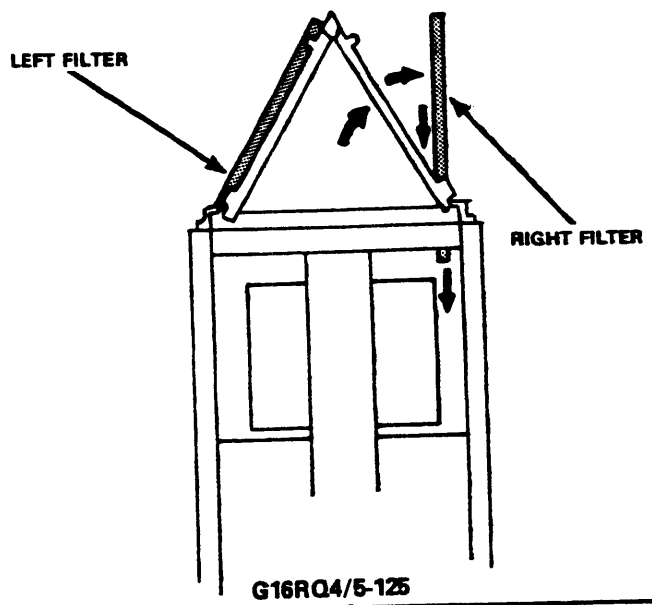

G16RQ4/5-125

FIGURE 14

Cleaning Permanent Slab Filters

Wash permanent slab filters with water and mild detergent. When dry, filters should be sprayed with filter handicoater before replacing. Filter handicoater is RP products coating no. 418 and is available as Lennox part no. P-8-5069.

If necessary, replace with permanenet filter of like kind and size. DO NOT replace with disposable filter.

171

CLEANING HEAT EXCHANGER AND BURNERS

NOTE - Use papers or protective covering in front of furnace while cleaning furnace.

1 - Turn off both electrical and gas power supplies to furnace. (Refer to illustration below for parts identification for disassembly and reassembly procedures.)
2 - Remove burner and blower access panel, flue pipe, induced draft blower and flue collector.
3 - Disconnect gas supply piping and pilot. Remove piping manifold.

To clean heat exchanger:

4 - Remove pouch cover, then pull burners from heat exchanger.
5 - Remove baffles inside top opening of heat exchanger by removing screws.
6 - Insert a 2 ft. (610 mm) steel rod that has a 20 in. (508 mm) length of chain attached to one end into top opening of heat exchanger.
7 - Shake rod to drop chain through the clamshell into burner cavity in bottom of heat exchanger.
8 - Attach bottom of chain to another 2 ft. (610 mm) rod.
9 - Push and pull the rods back and forth and up and down with a vigorous motion. The chain will dislodge the soot and scale deposits inside the heat exchanger. Repeat for each clamshell.
10 - With shop vacuum or rags, clean out soot and scale deposits from bottom of heat exchanger.

CONNECT CHAIN TO ROD AND DROP CHAIN DOWN THROUGH TOP OF HEAT EXCHANGER. CONNECT AT BOTTOM TO ANOTHER ROD. MOVE RODS UP AND DOWN, BACK AND FORTH TO CLEAN HEAT EXCHANGER.

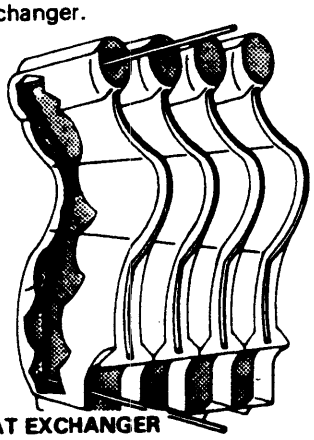

CLEANING HEAT EXCHANGER

To clean burners:

NOTE - FOR UNITS WITH FLAME RODS, remove two springs and withdraw rods from back of burner. Clean flame rods with wire brush. Continue with items 11 through 13 below and reinstall flame rods and springs.

11 - Clean top of burner ports with a wire brush.
12 - Clean burner ports by inserting a cleaning tool (made from a piece of sheet metal cut to fit the burner ports) and work in and out of each port.
13 - Clean inside of each burner with a bottle cleaning brush.
14 - Replace burners making sure to fully engage in rear receiving slot in heat exchanger. Resecure gas manifold, piping and pouch cover.
15 - Reinstall baffles inside top opening of heat exchanger using #6—32 X 1/4 thread forming screws, then replace flue collector, induced draft blower, flue pipe and access panels.
16 - Turn on gas and check for gas leaks.
17 - Turn on electrical supply.
18 - Check pilot and burner flame. See page 10.

CLEANING TOP

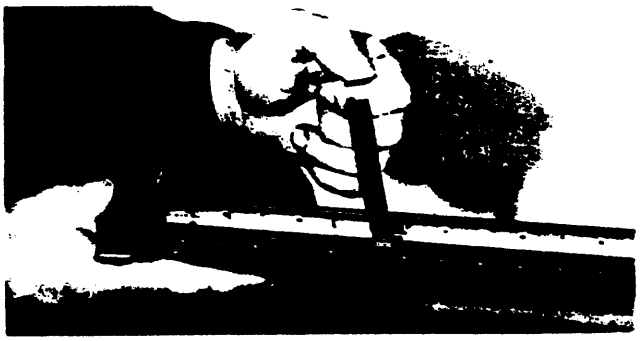

CLEANING PORTS

CLEANING INSIDE

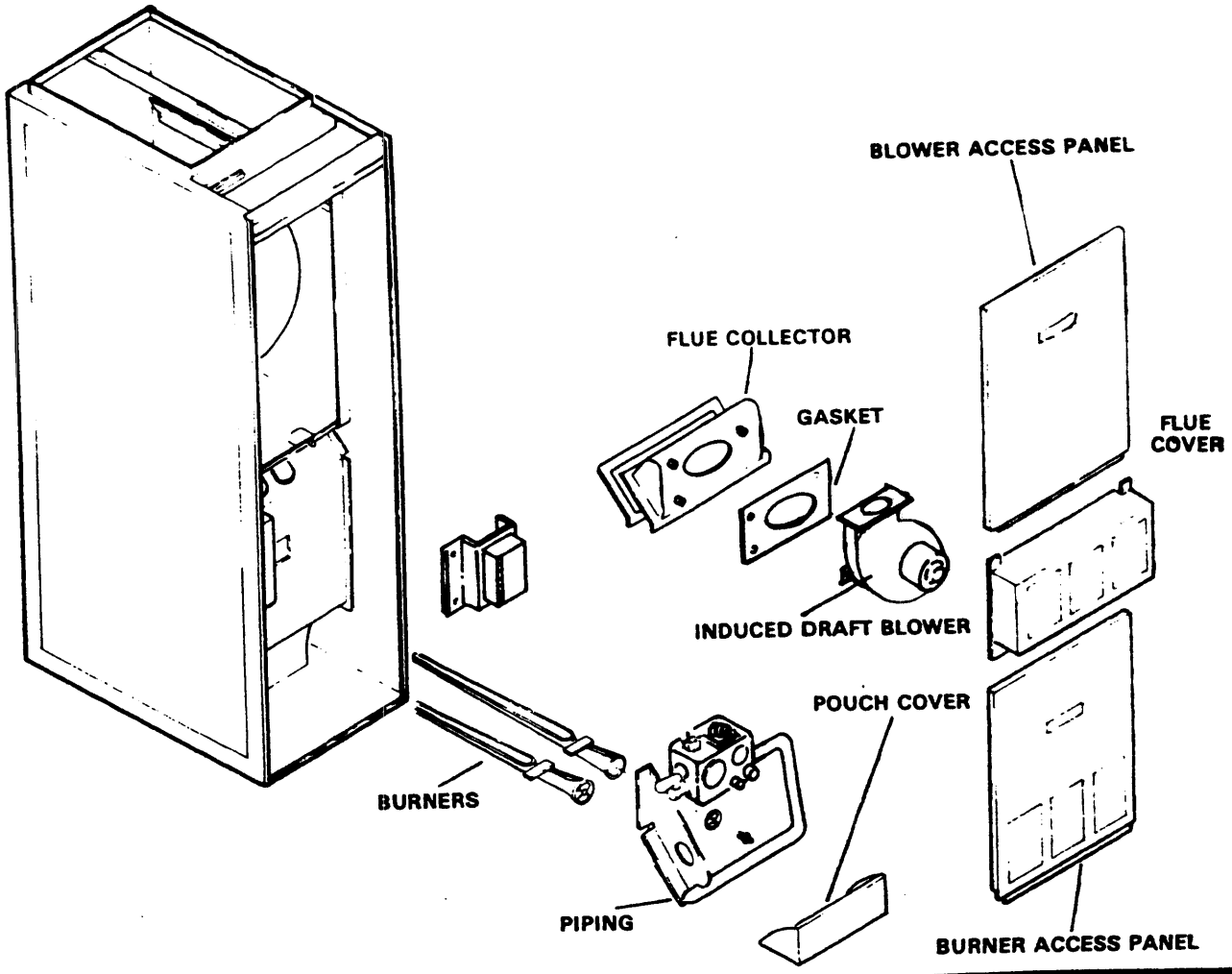

REPAIR PARTS LIST

The following repair parts are available through independent Lennox dealers. When ordering parts, include the complete furnace model number listed on the A.G.A. rating plate — Example G16RQ3-50.

CABINET PARTS

- Burner access panel
- Blower access panel
- Left vestibule panel
- Right vestibule panel
- Filter rail
- Control box cover
- Pouch cover

CONTROL PANEL PARTS

- Transformer
- Indoor blower relay
- Induced draft blower relay
- Pressure switch

HEATING PARTS

- Heat exchanger
- Flue baffles
- Flue collector
- Main burners
- Main burner orifices
- Main burner air shutters
- Pilot burner
- Pilot orifice
- Gas manifold
- Gas valve
- Flame sensor
- Ignition control
- Ignition cable
- Flame sensor lead
- Fan and limit control combination
- Secondary limit

BLOWER PARTS

- Blower wheel
- Motor
- Motor mounting frame
- Motor capacitor
- Blower housing cut-off plate
- Induced draft blower housing
- Induced draft blower motor
- Induced draft blower motor cooling fan
- Induced draft blower wheel
- Induced draft blower motor isolation springs
- Flue transition assembly
- Air shutter slide
- Flue transition gaskets
- Induced draft blower housing inlet plate

173

EXHIBIT 8
Sennit
DATE 1/8/20/87 INSPECTOR 3 [illegible]

installation-operation-maintenance instruction

G16 SERIES UNITS Up Flow

LENNOX Industries Inc.

Gas Units
502,033M
1/86
Supersedes 501,945M & 501,960M

Litho U.S.A.

UNIT DIMENSIONS

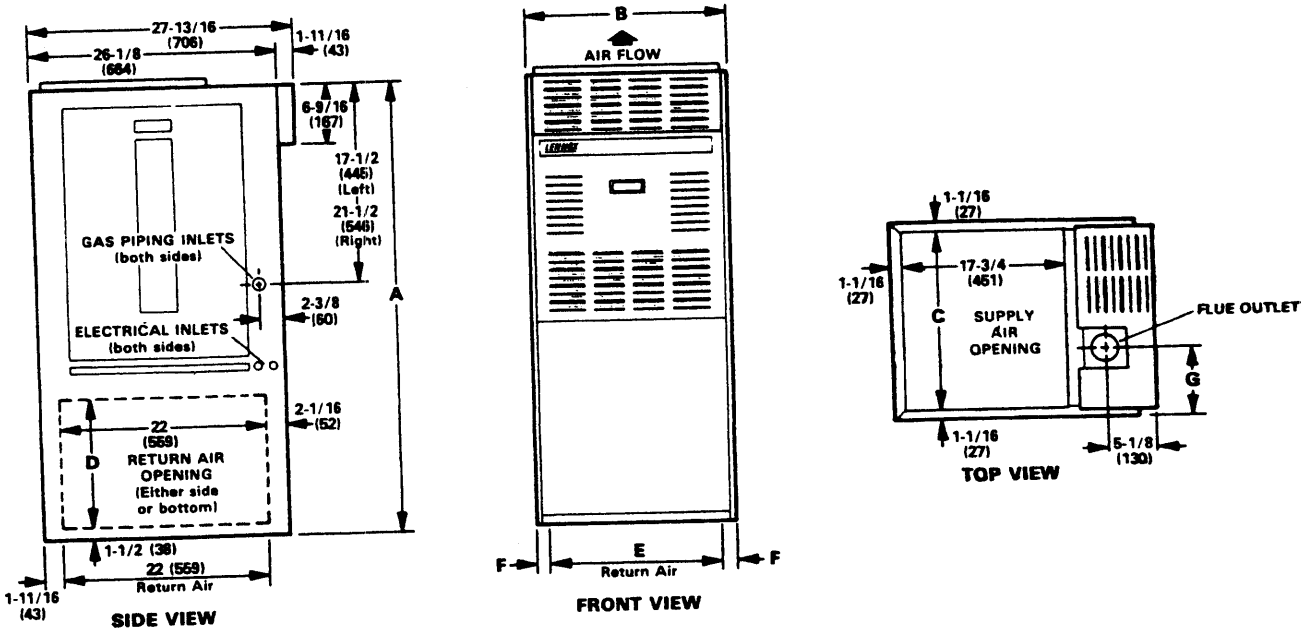

Model Number	A	B	C	D	E	F	G
G16Q2-50, G16Q3-50, G16Q3-75	49 in. (1245mm)	16-1/4 in. (413mm)	14-1/16 in. (359mm)	11 in. (356mm)	11 in. (279mm)	2-5/8 in. (67mm)	5-1/32 in. (128mm)
G16Q4-75, G16Q3/4-100	49 in. (1245mm)	21-1/4 in. (540mm)	19-1/16 in. (486mm)	14 in. (356mm)	14 in. (356mm)	3-5/8 in. (92mm)	7-17/32 in. (191mm)
G16Q4-100, G16Q5-100, G16Q4/5-125	53 in. (1346mm)	26-1/4 in. (667mm)	24-1/16 in. (613mm)	18 in. (457mm)	21 in. 533mm)	2-5/8 in. (67mm)	10-1/32 in. (255mm)

CHECK POINTS

START-UP AND PERFORMANCE CHECK LIST

Job Name _____ Job No. _____ Date _____
Job Location _____ City _____ State _____
Installer _____ City _____ State _____
Unit Model No. _____ Serial No. _____ Serviceman _____

HEATING SECTION

Electrical Connections Tight? ☐
Supply Voltage _____ Blower Motor Amps _____
Blower Motor H.P. _____
Blower Motor Lubrication O.K.? ☐
Gas Piping Connections Tight & Leak-Tested ☐
Fuel Type: Natural Gas? ☐ LP Gas? ☐
Furnace BTU Input _____
Line Pressure (7" Natural Gas or 11" LP Gas) _____

Regulator Pressure (3.5 Factory Setting, Nat. Only) _____
Air Shutters Properly Adjusted (if installed)? ☐
Flue Connections Tight? ☐ Proper Draft? ☐
Fan Control Setting (90° Factory Setting) _____
Limit Control Cutout _____ Temperature Rise _____
Filters Clean & Secure? ☐ Vent Clear? ☐
Pressure Switch Operating? ☐ Return Air Opening Sealed? ☐
Combustion Air Clearences Maintained? ☐

THERMOSTAT

Calibrated? ☐ Heat Anticipator Properly Set? ☐ Level? ☐

REQUIREMENTS

Installation of Lennox gas central furnaces must conform with local building codes or, in the absence of local codes, with the National Fuel Gas Code (ANSI-Z223.1-1984).

Code is available from:

American National Standards Institute, Inc.
1430 Broadway
New York, NY 10018

These units are A.G.A. (American Gas Association) design certified.

NOTE - G16X series units (units equipped with flame rods) are design certified for use with natural gas only.

Air supply for combustion and ventilation must conform to the methods outlined in National Fuel Gas Code.

The furnace is certified for installation clearances to combustible material as listed on the appliance rating plate and the following table:

TABLE 1

CLEARANCES		
Clearances	**Location**	**Inches (mm)**
Service access	Front	36 in. (914 mm)
To combustible materials	Top, Side and Rear	1 in. (25 mm)
	Flue	4 in. (102 mm)
Around combustion chamber air opening	Front	6 in. (152 mm)

NOTE - Appliance shall not be installed directly on carpeting, tile or other combustible material other than wood flooring.

Accessibility and service clearances must take precedence over fire protection clearances.

For installation in a residential garage, unit must be installed so that burner(s) and ignition source are located no less than 18 in. (457 mm) above floor. Furnace must be located or protected to avoid physical damage by vehicles.

Unit must be adjusted to obtain a temperature rise within the range specified on appliance rating plate.

When furnace is used in conjunction with cooling units, it shall be installed in parallel with, or on the upstream side of, cooling units to avoid condensation in the heating element. With a parallel flow arrangement, damper (or other means to control the flow of air) shall be adequate to prevent chilled air from entering the furnace and, if manually operated, must be equipped with means to prevent operation of either unit, unless damper is in the full "heat" or "cool" position.

When installed, furnace must be electrically grounded in accordance with local codes or, in the absence of local codes, with the National Electric Code, ANSI/NFPA No. 70-1984, if an external electrical source is utilized. The National Electric Code (ANSI/NFPA No. 70-1984) is available from:

National Fire Protection Association
470 Atlantic Avenue
Boston, MA 02210

Field wiring connection with unit must meet or exceed specifications of type T wire and withstand a 63°F (17°C) temperature rise.

When furnace is installed so that supply ducts carry air circulated by furnace to areas outside space containing furnace, return air shall be handled by a duct(s) sealed to the furnace casing and terminating outside space containing furnace.

INSTALLATION

SHIPPING LIST

1 - Leveling bolt package (if ordered)
1 - Thermostat (if ordered)
1 - Rubber grommet (for electrical make-up)

SHIPPING DAMAGE

Check unit for shipping damage. Receiving party should contact the last carrier immediately if any shipping damage is found.

SETTING EQUIPMENT

1 - Holes are provided in corners of base for leveling unit. Install leveling bolts (if desired) as shown, or shim under unit.

CAUTION - If leveling bolts are used, be sure to install plastic nuts as shown and tighten down snug before setting unit.

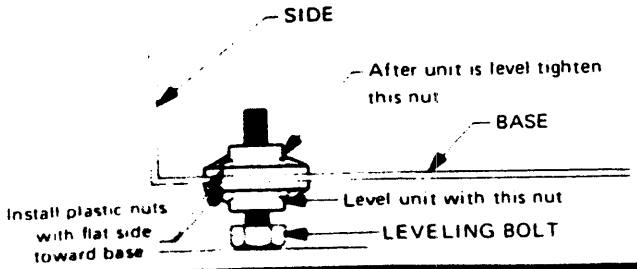

2 - Set unit in desired location keeping in mind clearance listed on appliance rating plate. Also keep in mind gas supply connections, electrical supply, flue connections and sufficient clearances for installing and servicing unit.

RETURN AIR OPENING

Return air can be brought in either side or at the bottom of unit. Scribe lines show the outline of each return air opening.

DUCT SYSTEM

Size and install the supply and return system using industry-approved standards that result in a quiet and low-static system with uniform air distribution.

FLUE TRANSITION

WARNING - Do not start or operate unless flue transition is in place. Flue transition and air shutter plate are both factory-installed (See figure 6). Air shutter plate is field adjustable to provide maximum output efficiency (See Start-Up and Adjustment section).

175

VENTING

G16 furnaces must be vented in compliance with all local codes, the National Fuel Gas Code (ANSI-Z223.1-1984) and these instructions.

General Recommendations and Requirements

G16 series furnaces must be vented in accordance with the methods outlined in these instructions. These methods require the use of NFPA- or ANSI-approved chimneys or U.L.-listed type B-1 gas vents, as well as the modifications and limitations outlined below.

The following recommendations apply to all venting methods for G16 series units:

*NOTE - The **vent** is defined as a passageway, vertical or nearly so, used to convey flue gases from an appliance, or its vent connector, to the outside atmosphere. The **vent connector** is defined as the pipe or duct which connects a fuel-gas burning appliance to a vent or chimney.*

1 - Flue or vent connection materials must meet requirements of all applicable local codes and the National Fuel Gas Code (ANSI-Z223.1-1984).

2 - Vent connector pipe must be at least as large as the 3-inch (76 mm) flue outlet on the furnace. No reduction in size is permissible. A 9-inch minimum length of vent connector pipe must be run from the furnace flue outlet to the first 90° elbow (See figure 1).

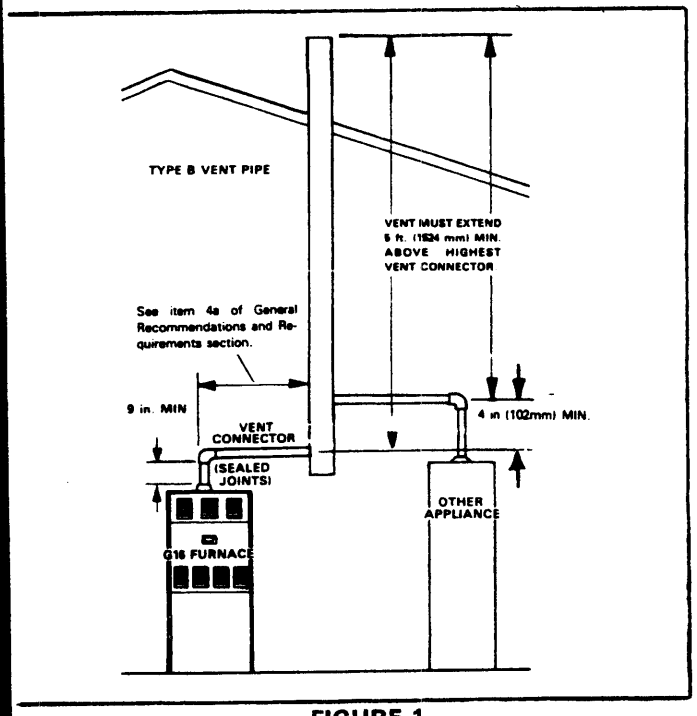

FIGURE 1

3 - All single wall **vent connectors** — 3-inch diameter or greater — must have all seams and joints sealed with pressure-sensitive aluminum foil tape or silicone rubber sealant. All type B-1 pipe used as a **vent connector** must be sealed externally at all sectional joints with aluminum foil tape or silicone rubber sealant. Aluminum foil tape must meet all requirements of the SMACNA AFTS-100-73 standards and have a service temperature rating of 400°F (204°C), i.e., Lennox tape part number 75F0801. Silicone rubber sealant must have a service temperature rating of 482°F (250°C), i.e., Dow Corning RTV-732 or equivalent.

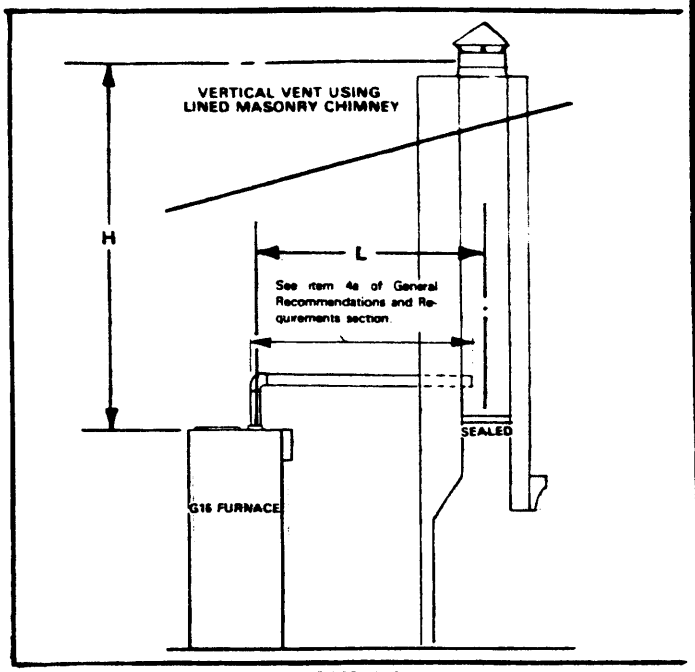

FIGURE 2

4 - Keep vent pipe and vent connector runs as short as possible with a minimum number of elbows.

a - The vent connector — either sealed single-wall or type B-1, double-wall vent pipe — from the furnace flue outlet to the vent cannot exceed 15 ft. (4572 mm) with 4 elbows or 30 ft. (9144 mm) with one elbow. One elbow is equivalent to 5 ft. (1524 mm) of vent pipe.
Horizontal runs of vent pipe should slope upward at least 1/4 inch per foot.

b - If vent pipe from appliance to roof termination (vent cap) does not exceed 15 ft. (4572 mm) with 4 elbows or 30 ft. (9144 mm) with one elbow, 3-inch diameter single-wall or double-wall pipe is permissible for the entire length of the vent provided it does not violate local codes. In this case, seams, joints and elbows must be sealed as per section "3."

NOTE - The American Gas Association has determined that the G16 unit is a Category I appliance when vented in either a dedicated or common vertical vent. For further information concerning common venting of this appliance, consult the American Gas Association Engineering Report Number ER26-47, available through your Lennox representative.

c - All vertical vents with the exception of those outlined in section "b" should be sized in height and capacity according to the National Fuel Gas Code (ANSI-Z223.1-1984). Refer to table 2 and figure 2 for sizing type B-1, double-wall vent pipe with type B-1, double-wall vent connector and serving a single appliance. Vertical vents must be at least 5 ft. (1524 mm) higher

176

than the highest vent connection point (See figure 1). Single-wall pipe and type B-1, double-wall pipe used as vertical vent do not need to be sealed.

d - Clearances to combustible materials are 4 in. (102 mm) for single-wall vent pipe and 1 in. (25 mm) for type B-1, double-wall vent pipe.

TABLE 2

Sizing Type B, Double-Wall Vents with Type B, Double-Wall Vent Connectors Serving a Single Appliance

Height H	Lateral L	Vent Diameter — D 3"	4"	5"	6"
		Maximum Appliance Input Rating in Thousands of Btu Per Hour			
6'	0	46	86	141	205
	2'	36	67	105	157
	6'	32	61	100	149
	12'	28	55	91	137
8'	0	50	94	155	235
	2'	40	75	120	180
	8'	35	66	109	165
	16'	28	58	96	148
10'	0	53	100	166	255
	2'	42	81	129	195
	10'	36	70	115	175
	20'	NR	60	100	154
15'	0	58	112	187	285
	2'	48	93	150	225
	15'	37	76	128	198
	30'	NR	60	107	169
20'	0	61	119	202	307
	2'	51	100	166	249
	10'	44	89	150	228
	20'	35	78	134	206
	30'	NR	68	120	186
30'	0	64	128	220	336
	2'	56	112	185	280
	20'	NR	90	154	237
	40'	NR	NR	NR	200
40'	0	66	132	228	353
	2'	59	118	198	298
	20'	NR	96	167	261
	40'	NR	NR	NR	223

NR indicates not recommended.

5 - All vent pipe passing through floors, ceilings and walls must be fire-stopped according to the requirements of the National Fuel Gas Code (ANSI-Z223.1-1984) (See figure 3).

6 - Vent pipe must be rigidly supported with hangers and straps to prevent movement after installation. Vent pipe must be supported for the design and weight of the material used to maintain clearances and to prevent physical damage.

7 - No portion of any G16 series venting should extend into, or pass through, any circulating air duct or plenum.

8 - All vertical vent terminations must be located per the National Fuel Gas Code (ANSI-Z223.1-1984) and all applicable local codes.

9 - All vertical vents must be terminated with a U.L.-listed vent cap or rain shield assembly unless local codes require otherwise.

VENT ARRANGEMENTS

The possible vent arrangements for G16 series furnaces are outlined below:

Vertical Venting (See Figure 1)

G16 furnaces may be vented vertically either as a single appliance or as a common vent with multiple gas-fired appliances. For a dedicated vent, single-wall vent pipe, type B-1 double-wall vent pipe, or a lined masonry chimney may be used for vertical vent applications. In a common venting application, single-wall vent pipe, type B-1 double-wall vent pipe, or a lined masonry chimney may also be used. In all cases, the vent or chimney must be sized and installed per the requirements of the National Fuel Gas Code (ANSI-Z223.1-1984). Table 3 can be used to size type B, double-wall vents serving two or more appliances.

TABLE 3

Sizing Type B, Double-Wall Vents Serving Two or More Appliances

Total Vent Height "H"	Common Vent Diameter 3"	4"	5"	6"	7"	8"
	Combined Appliance Input Rating in Thousands of Btu Per Hour					
6'	—	65	103	147	200	260
8'	—	73	114	163	223	290
10'	—	79	124	178	242	315
15'	—	91	144	206	280	365
20'	—	102	160	229	310	405
30'	—	118	185	266	360	470
40'	—	131	203	295	405	525

CAUTION - Common vents serving G16 and G16R units cannot be used to vent more than three appliances. It is permissible to vent two G16 units with one other gas-fired appliance or two other appliances and one G16 unit. Do not use a common vent for three G16 or G16R units.

a - The vent connector from the furnace flue outlet to the vertical vent may be either single-wall vent pipe with a diameter of 3 in. (76 mm) or larger or type B-1, double-wall pipe. The vent connector must be sealed according to item 3 of the general recommendations section.

IMPORTANT - When G16 venting is shared with other gas appliances, vent connectors for all other appliances must be joined to the vent at least 4 in. (102 mm) above the highest G16 or G16R connection (See figure 1). If G16 is vented with another G16 or G16R unit, there must be a four-inch (102 mm) vertical separation between the vent connectors. Do not attach a G16 or G16R vent connector to the bottom of the common vent.

CAUTION - In a common venting situation, horizontal vent pipe runs are not permissible beyond the point that the vent connectors reach the vent pipe. See figure 1 for correct application.

b - See general recommendations section, item 4, for permissible vent connector lengths.

177

c - Any masonry chimney to be used for venting a G16 series gas furnace must be lined, and must be sized and installed per the National Fuel Gas Code (ANSI-Z223.1-1984) and all applicable local codes.

NOTE - When inspection reveals that an existing chimney is not safe for the intended purpose, it shall be rebuilt to conform to nationally recognized standards, lined or relined with suitable materials, or replaced with a vent or chimney suitable for venting the G16 unit. The chimney passageway must also be inspected to make sure that it is clear and free of obstructions.

d - Masonry chimneys serving fireplaces cannot be used for venting purposes unless the fireplace opening is permanently sealed.

e - When sizing the dedicated vertical vent per the requirements of the National Fuel Gas Code (ANSI-Z223.1-1984), it is recommended that the diameter of type B-1, double-wall vent pipe does not exceed 6 inches (152 mm). Vent pipe size for common venting applications should not exceed 8 inches (203 mm).

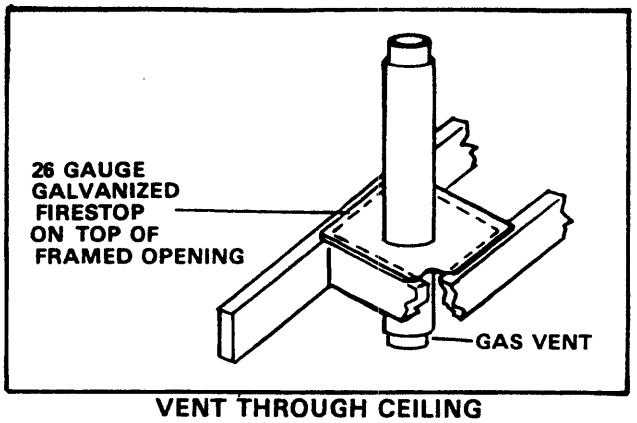

VENT THROUGH CEILING

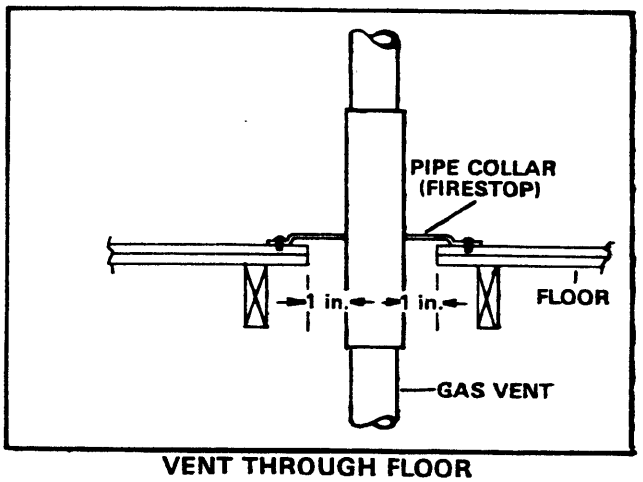

VENT THROUGH FLOOR

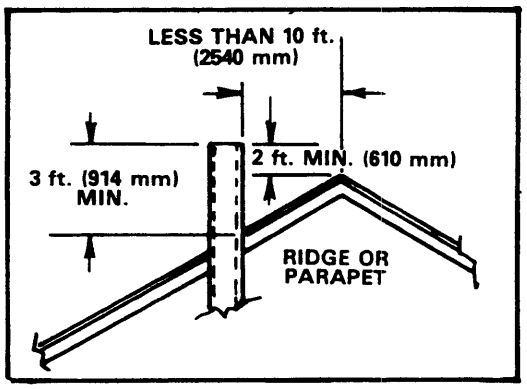

VENT THROUGH ROOF

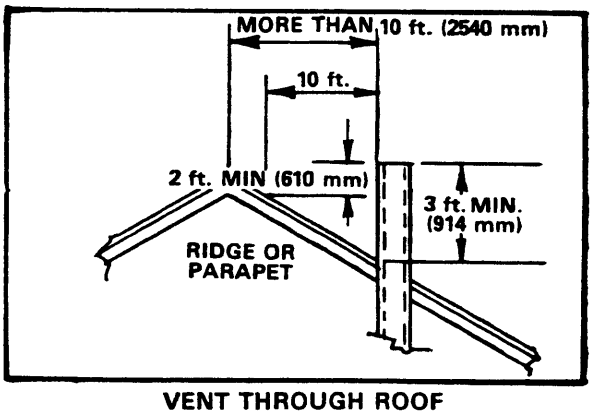

VENT THROUGH ROOF

FIGURE 3

178

GAS PIPING

GAS SUPPLY

1 - This unit is shipped standard for left side installation of piping. Simply connect gas supply to piping assembly.

2 - A piping hole is also fabricated in the right side of unit for an alternate piping arrangement.

3 - When connecting gas supply, the length of run from the meter must be considered in determining pipe size to avoid excessive pressure drop. For correct sizing of gas delivering piping, consult the utility having jurisdiction. A drip leg should be installed in the vertical pipe run to unit.

NOTE - Installer must provide a 1/8" N.P.T. plugged tapping in field piping upstream of gas supply connection to unit. Tapping must be accessible for test gauge connection (See figure 4).

In some localities, codes may require installation of a manual main shut-off valve and union (furnished by installer) external to unit. Union must be of the ground joint type.

NOTE - Compounds used on threaded joints of gas piping must be resistant to the actions of liquified petroleum gases.

HIGH ALTITUDE DERATE

This appliance must be derated when installed at an elevation of 2,000 ft. (610 m) or more above sea level. Tables 4 and 5 show the derated manifold pressure for high altitude operation with both natural and LP gas. Operating this appliance at the manifold pressure specified on the tables will ensure proper unit heat input at high altitude. Consult your gas utility for the local natural gas heating value.

NOTE-This is the only permissible field derate for this appliance.

TABLE 4
High Altitude Manifold Pressure Derate for Natural Gas Units

ALTITUDE (FT.)	*HEATING VALUE (BTU/FT³)				
	900	950	1000	1050	1100
0	4.32" wc	3.88" wc	3.5" wc	3.17" wc	2.89" wc
1000	4.32" wc	3.88" wc	3.5" wc	3.17" wc	2.89" wc
2000	3.65" wc	3.30" wc	2.95" wc	2.70" wc	2.45" wc
3000	3.35" wc	3.00" wc	2.70" wc	2.45" wc	2.25" wc
4000	3.05" wc	2.75" wc	2.45" wc	2.25" wc	2.04" wc
5000	2.77" wc	2.48" wc	2.25" wc	2.05" wc	1.85" wc
6000	2.50" wc	2.25" wc	2.00" wc	1.85" wc	1.65" wc

**Heating value based on atmospheric pressure of 30" mercury and temperature of 60°F (16°C).*

TABLE 5
High Altitude Manifold Pressure Derate for LP Gas Units

ALTITUDE (FT.)	0	1000	2000	3000	4000	5000	6000
MANIFOLD PRESSURE	9.0"wc	9.0"wc	7.61"wc	6.97"wc	6.35"wc	5.76"wc	5.20"wc

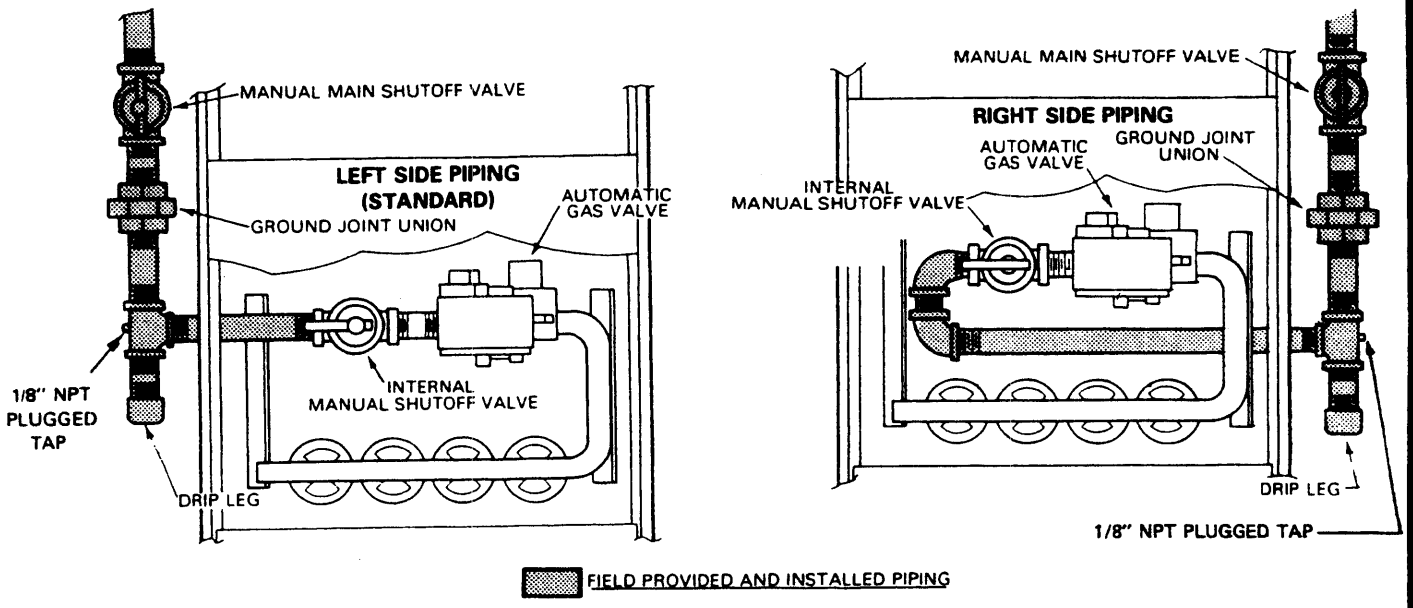

FIGURE 4

179

LEAK CHECK

After gas piping is completed, carefully check all piping connections (factory and field) for gas leaks. Use a soap solution or other preferred means.

CAUTION - DO NOT USE MATCHES, CANDLES, FLAME OR OTHER SOURCES OF IGNITION TO CHECK FOR GAS LEAKS.

NOTE - In case emergency shutdown is required, shut down main manual gas valve and disconnect main power to unit. These devices should be properly labeled by installer.

IMPORTANT - When testing pressure of gas lines, gas valve must be disconnected and isolated (See figure 5). Gas valves can be damaged if subjected to more than 1/2 psig (3.48 kPa).

The furnace must be isolated from the gas supply system by closing its individual manual shut-off valve during any pressure testing of the gas supply system at pressures equal to or less than 1/2 psig (3.48 kPa).

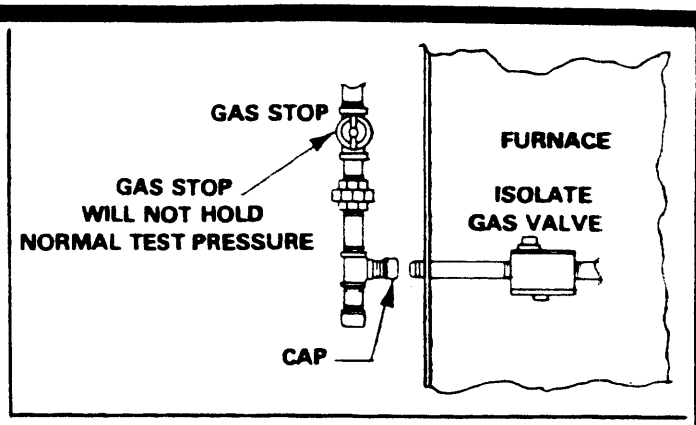

FIGURE 5

G16X SERIES UNITS

IMPORTANT - G16X series units (units equipped with flame rods) are approved for use with natural gas only.

ELECTRICAL

1 - Select fuse and wire size according to blower motor amps.
2 - Snaphole plugs are provided on both sides of cabinet to facilitate wiring.
3 - Install room thermostat according to instruction provided with thermostat.
4 - Install a separate fused disconnect switch near the unit so power can be turned off for servicing.
5 - Complete wiring connections to equipment using provided wiring diagrams.
6 - Electrically ground unit in accordance with local codes or, in the absence of local codes, in accordance with the National Electric Code (ANSI/NFPA No. 70-1984).

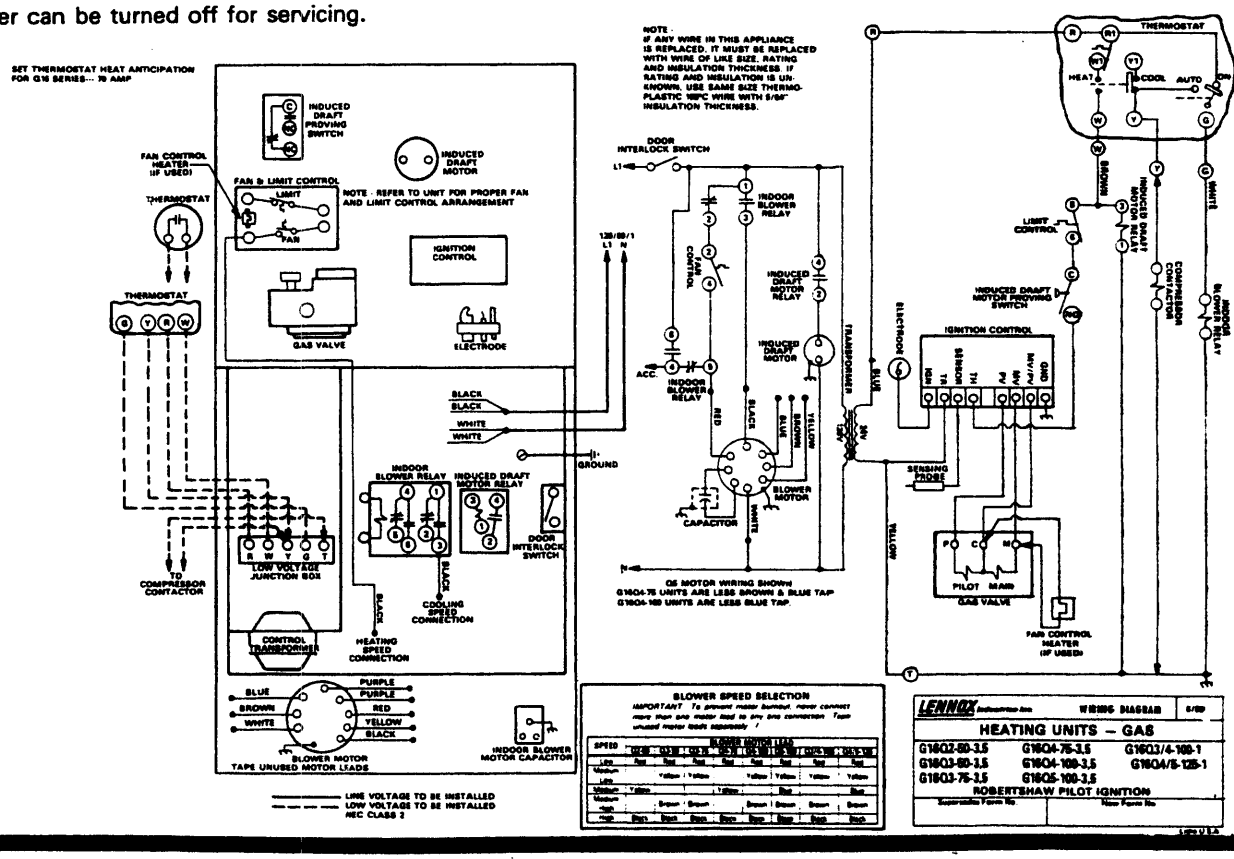

180

ELECTRICAL CONT

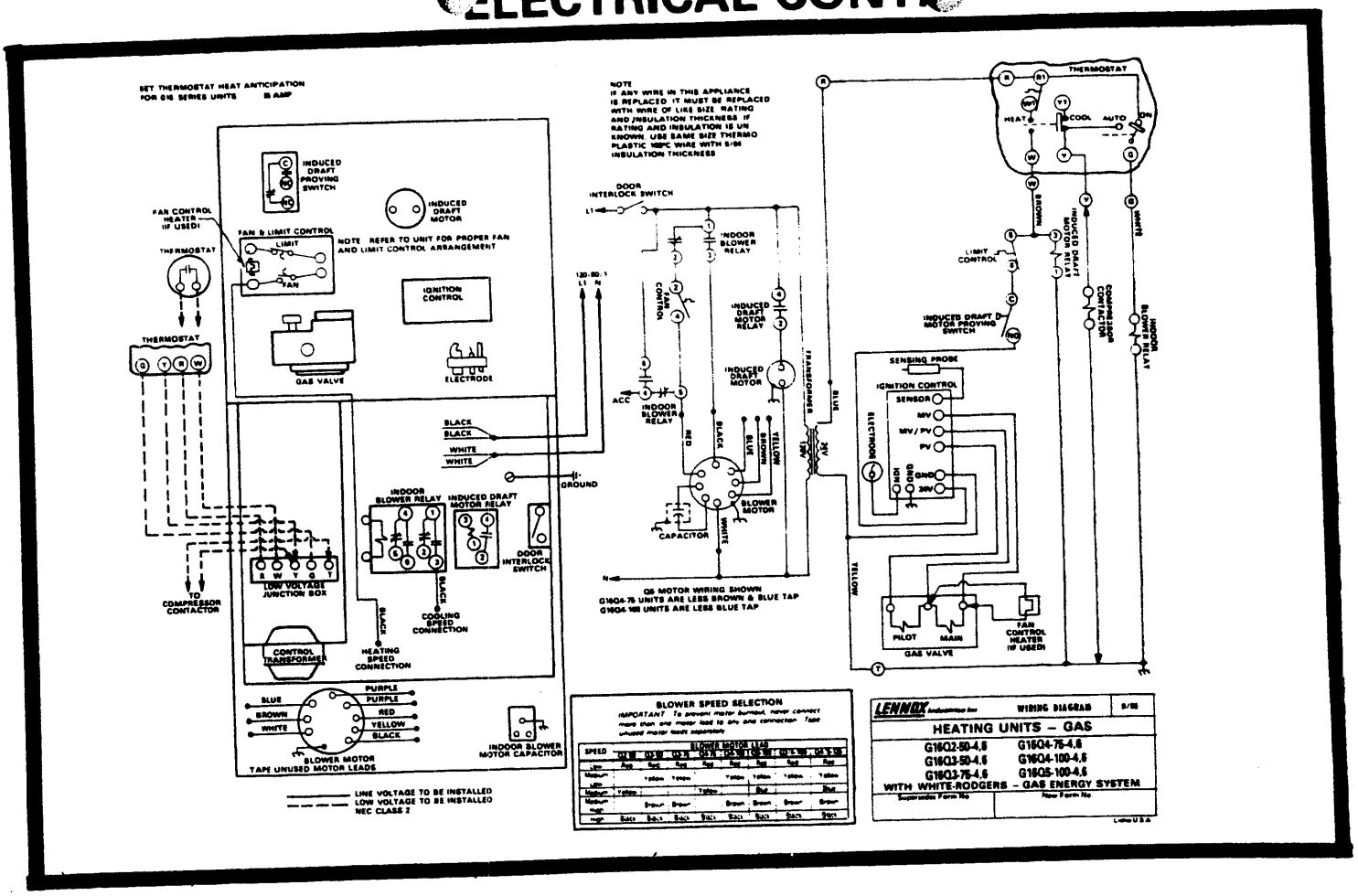

181

START UP AND ADJUSTMENTS

START-UP

This unit is equipped with an intermittent pilot ignition system. Do not attempt to manually light pilot. Each time thermostat calls for heat, an electric spark ignites the pilot. The pilot does not burn when there is no call for heat.

To place furnace in operation:

*1 - With thermostat set below room temperature and power to furnace off, turn manual knob of gas valve clockwise to OFF position. WAIT 5 MINUTES.

2 - Turn manual knob of gas valve counterclockwise to ON position. Turn power on and set thermostat above room temperature.

3 - If pilot does not light, repeat above instructions.

4 - Set thermostat to desired room temperature.

To shut off furnace:

1 - Set thermostat to its lowest temperature and turn power supply to furnace off.

*2 - Turn manual knob of the gas valve clockwise to off.

*On some gas valves, the manual knob must be depressed to turn OFF.

FAN/LIMIT CONTROL

Limit Control - Factory set: No adjustment necessary.

Fan Control - Factory set: ON - 115°F (46°C)
OFF - 90°F (32°C)

GAS FLOW

To check for proper gas flow to combustion chamber, determine Btu input from appliance rating plate. Divide this input rating by the Btu per cubic foot of available gas. Result is the required number of cubic foot per hour. Determine the flow of gas through gas meter for 2 minutes and multiply by 30 to get the hourly flow of gas to burner.

NOTE - Electric ignitions consume 3 watts when in stand-by mode.

GAS PRESSURE

1 - Check gas line pressure with unit firing at maximum rate. A minimum of 7 in. (178 mm) w.c. for natural gas or 11 in. (279 mm) w.c. for LP gas should be maintained.

2 - After line pressure has been checked and adjusted, check regulator pressure. Correct manifold pressure for LP gas is 9.0 in. (229 mm) w.c. Correct regulator pressure for natural gas is 3.5 in. (89 mm) w.c.

TEMPERATURE RISE

Check temperature rise and, if necessary, adjust blower speed to maintain temperature rise within range shown on unit rating plate.

AIR SHUTTER (Does not include G16X models)

Air shutter plate is field-adjustable to provide maximum output efficiency. Adjust air shutter plate as follows:

1 - Start unit. After 15 minutes of normal unit operation at nameplate input, measure the concentration of CO_2 in the flue products. This measurement should be taken 3 to 6 inches above the unit flue outlet in the vent connector. The concentration of CO_2 is the flue products for maximum output efficiency should be 8.4 to 8.6 percent at nameplate input.

2 - If the operating concentration of CO_2 in the flue products does not fall within this range, loosen the flue transition securing screws and adjust the air shutter (See figure 6). Adjust the shutter toward the back of the unit to reduce the CO_2 concentration and toward the front to increase the concentration.

3 - Tighten the securing screws and repeat measurement process. **CAUTION - Do not over-torque flue transition securing screws. Blower housing engaging holes may strip.**

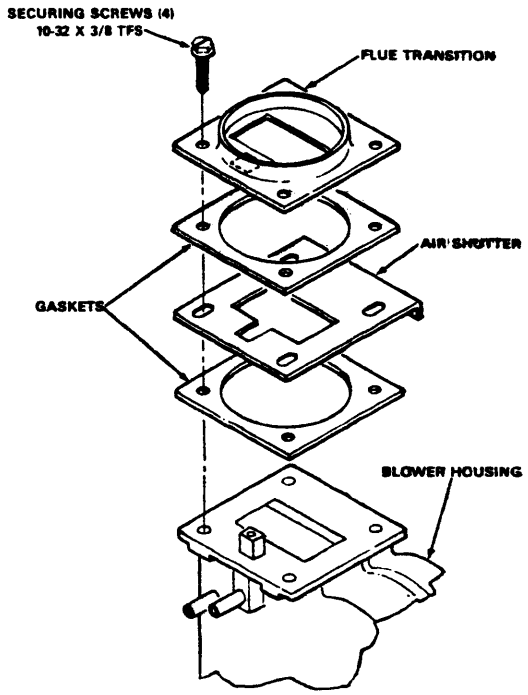

FLUE TRANSITION AND AIR SHUTTER ASSEMBLY

FIGURE 6

ELECTRICAL

1 - Check all wiring for loose connections.

2 - Check for correct voltage at unit (unit operating).

3 - Check amp-draw on blower motor. Motor Nameplate _____
Actual _____

FLUE AND CHIMNEY

1 - Check flue pipe, chimney and all connections for tightness and to make sure there is no blockage.

2 - Check unit for proper draft.

THERMOSTAT ANTICIPATION

G16 Series Units (Robertshaw) .....0.70 amp

G16 Series Units (White-Rodgers — GEI) .....0.85 amp

BLOWER SPEEDS

Multi-tap drive motors are wired for different heating and cooling speeds. Speed may be changed by simple interchanging motor connections at indoor blower relay and fan control. Refer to speed selection chart on unit wiring diagram.

CAUTION - To prevent motor burnout, never connect more than one (1) motor lead to any one connection. Tape unused motor leads separately.

182

START UP AND ADJUSTMENTS CONT.

FAILURE TO OPERATE

If unit fails to operate check the following:

1 - Is thermostat calling for heat?
2 - Is main disconnect switch closed?
3 - Is there a blown fuse?
4 - Is filter dirty or plugged? Dirty or plugged filters will cause unit to go off on limit control.
5 - Is gas turned on at meter?
6 - Is internal manual shut-off valve open?
7 - Is pressure switch closed? Obstructed flue will cause unit to shut off at pressure switch. Check flue passages and outlet.

PILOT AND BURNER FLAME

1 - Pilot Flame - Pilot flame must surround the end of flame sensor for proper operation of pilot safety circuit.

CAUTION - Check pilot flame and burner flame periodically to ensure proper operation.

2 - Burner Flame - Start burner and allow to operate for a few minutes to establish normal burning conditions. Check burner flame by observation. Flame should be predominantly blue in color, strong in appearance and should rise directly from the burner ports in the heat exchanger. Check to see that flame is burning from all continuous ribbon ports and that flame does not impinge on the sides of the heat exchanger.

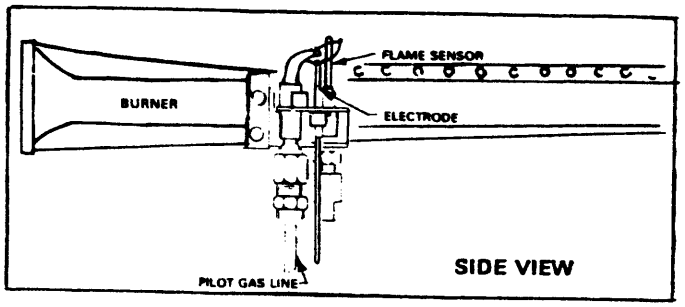

PILOT FLAME

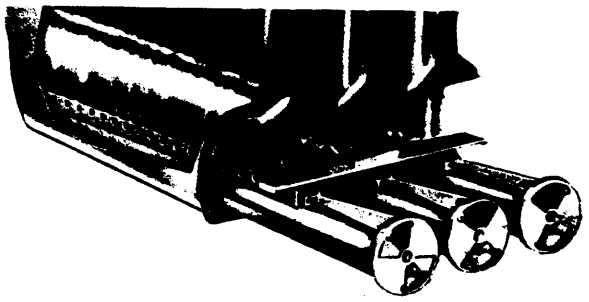

BURNER FLAME

MAINTENANCE

At the beginning of each heating season, the system should be checked as follows:

BLOWER

Check and clean blower wheel. Lubricate blower motor. Refer to lubrication information on blower access panel.

FILTERS

Filters must be replaced when dirty to assure proper furnace operation. Replace dirty filter with new filter of same size and type. Refer to filter information on blower access panel.

FLUE AND CHIMNEY

1 - Check flue pipe, chimney and all connections for tightness and to make sure there is no blockage.
2 - Check induced draft blower for proper operation. Also check pressure switch connections and pressure taps.

ELECTRICAL CHECK

1 - Check all wiring for loose connections.
2 - Check for correct voltage at unit (unit operating).
3 - Check amp-draw on blower motor. Motor Nameplate _____ Actual _____

CLEANING HEAT EXCHANGER AND BURNERS

NOTE - Use papers or protective covering in front of furnace while cleaning furnace.

1 - Turn off both electrical and gas power supplies to furnace. Refer to illustration below for parts identification for disassembly and reassembly procedures.)
2 - Remove burner and upper access panels, flue pipe, induced draft blower and flue collector.
3 - Disconnect supply gas piping and pilot.

To clean heat exchanger:

4 - Remove pouch cover, then pull burners from heat exchanger.
5 - Remove baffles inside top opening of heat exhanger by removing screws.
6 - Insert a 2 ft. (600 mm) steel rod that has a 20 in. (508mm) length of chain attached to one end into top opening of heat exchanger.
7 - Shake rod to drop chain through the clamshell into burner cavity in bottom of heat exchanger.
8 - Attach bottom of chain to another 2 ft. (600 mm) rod.
9 - Push and pull the rods back and forth and up and down with a vigorous motion. The chain will dislodge the soot and scale deposits inside the heat exchanger. Repeat for each clamshell.
10 - With shop vacuum or rags, clean out soot and scale deposits from bottom of heat exchanger.

CONNECT CHAIN TO ROD AND DROP CHAIN DOWN THROUGH TOP OF HEAT EXCHANGER. CONNECT AT BOTTOM TO ANOTHER ROD. MOVE RODS UP AND DOWN, BACK AND FORTH TO CLEAN HEAT EXCHANGER.

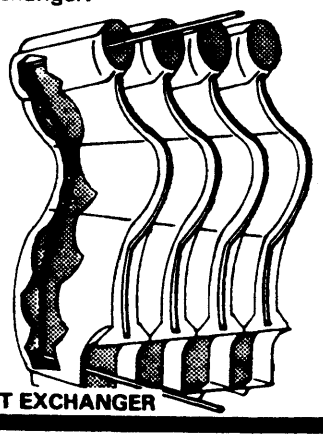

CLEANING HEAT EXCHANGER

183

To clean burners:

NOTE - FOR UNITS WITH FLAME RODS, remove two springs and withdraw rods from back of burner. Clean flame rods with wire brush. Continue with items 11 through 13 below and reinstall flame rods and springs.

11 - Clean top of burner ports with a wire brush.

12 - Clean burner ports by inserting a cleaning tool (made from a piece of sheet metal cut to fit the burner ports) and work in and out of each port.

13 - Clean inside of each burner with a bottle cleaning brush.

14 - Replace burners making sure to fully engage in rear receiving slot in heat exchanger. Resecure gas manifold, piping and pouch cover.

15 - Reinstall baffles inside top opening of heat exchanger using #6 — 32 X 1/4 thread forming screws, then replace flue collector, induced draft blower, flue pipe and access panels.

16 - Turn on gas and electrical supply.

17 - Check for gas leaks.

18 - Check pilot and burner flame. See page 9.

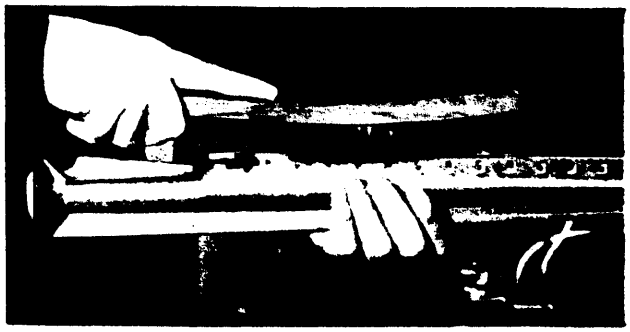

CLEANING TOP

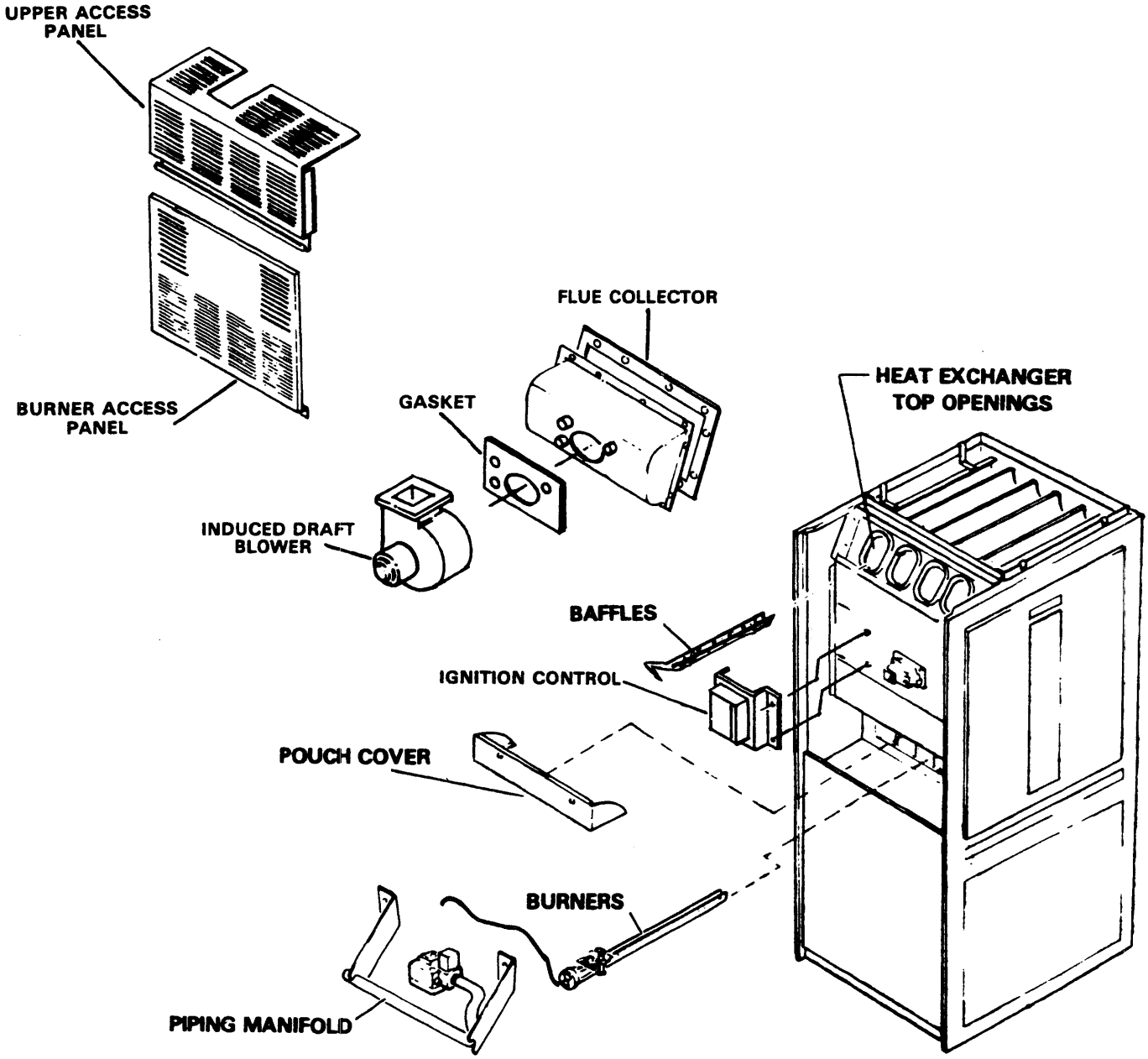

184

MAINTENANCE CONT.

CLEANING PORTS

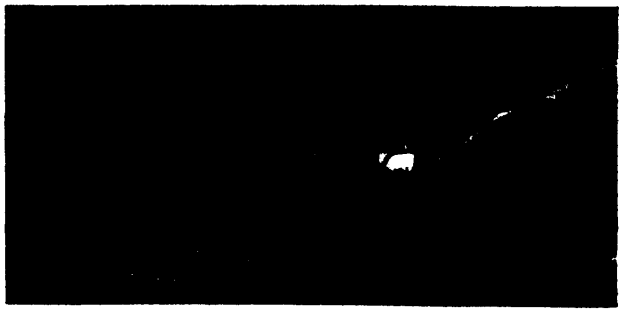

CLEANING INSIDE

REPAIR PARTS LIST

The following repair parts are available through independent Lennox dealers. When ordering parts, include the complete furnace model number listed on the A.G.A. rating plate — Example G16Q4/5-125-1

CABINET PARTS

- Burner access panel
- Blower access panel
- Upper access panel
- Filter rack for hammock-style filters
- Control box cover
- Pouch cover

CONTROL PANEL PARTS

- Transformer
- Indoor blower relay
- Induced draft blower relay
- Pressure switch

HEATING PARTS

- Heat exchanger
- Flue baffles
- Flue collector
- Main burners
- Main burner orifices
- Main burner air shutters
- Pilot burner
- Pilot orifice
- Gas manifold
- Gas valve
- Flame sensor
- Ignition control
- Ignition cable
- Flame sensor lead
- Fan and limit control

BLOWER PARTS

- Blower wheel
- Motor
- Motor mounting frame
- Motor capacitor
- Blower housing cut-off plate
- Induced draft blower housing
- Induced draft blower motor
- Induced draft blower motor cooling fan
- Induced draft blower wheel
- Induced draft blower motor isolation springs
- Flue transition assembly
- Air shutter slide
- Flue transition gaskets
- Induced draft blower housing inlet plate

185

A New, Money-Saving Way to Heat Your Home

Gives You More Heat Per Dollar Than Ever Before

The Lennox Pulse gas furnace squeezes more heat from your fuel than ever before possible. It will mean a significant savings on your monthly heating bill when you replace a conventional standing pilot furnace. Here's why:

Conventional gas furnaces send 300 to 450 degrees of heat up the flue due to venting requirements. But the Pulse furnace extracts 200 to 350 degrees more heat from the same amount of gas, so venting temperatures are much lower (about 100°F). Therefore, more of the heat you pay for is circulated inside, not wasted outdoors.

Super Efficiency Puts Money In Your Pocket

All gas furnaces require venting of combustion gases, therefore none can be 100% efficient. But if your present gas furnace is over ten years old, it is most likely in the range of 55% efficient. That means as much as 45% of the available heat is wasted outdoors and 45 cents of every heat dollar you spend goes with it.

The Pulse, available in up-flow, down-flow and horizontal models, is up to 97%* efficient, with minimum heat loss due to combustion venting. So why continue to waste 45% of your heating dollars when you can cut that loss to only 3%?

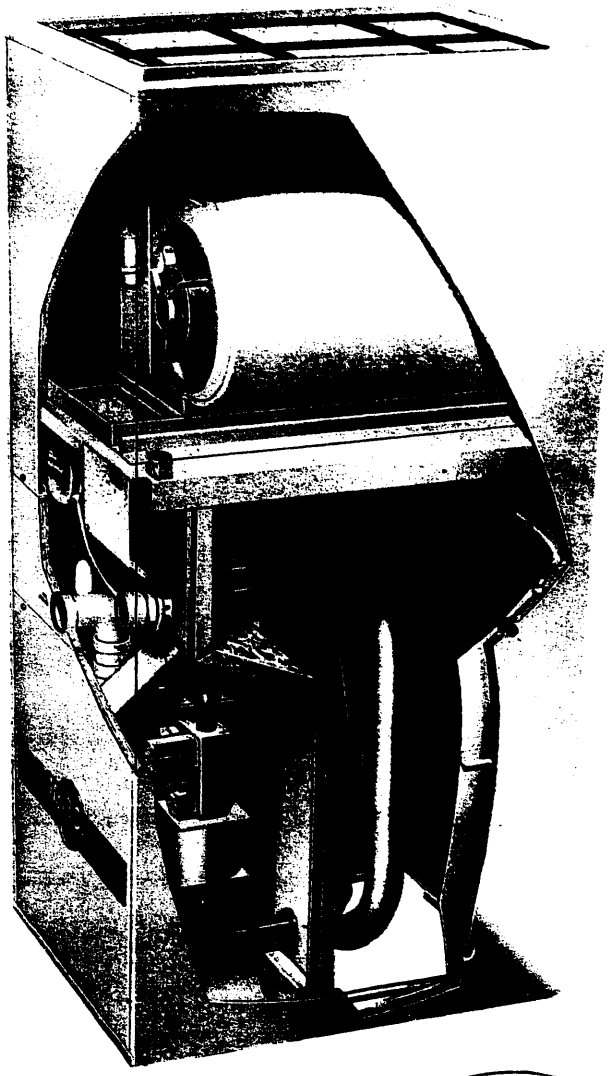

Pulse
Gas Furnace
Down-Flow

APPROVED The Homeowner PRODUCT

LENNOX

The Lennox Pulse furnace has received the first "Approved Product" award given by *The Homeowner* magazine in recognition of superior Pulse performance, quality and design innovation.

*Annual Fuel Utilization Efficiency (AFUE) rating as determined by Department of Energy testing standards. The higher the percentage, the more heat you receive from the same amount of fuel.

186

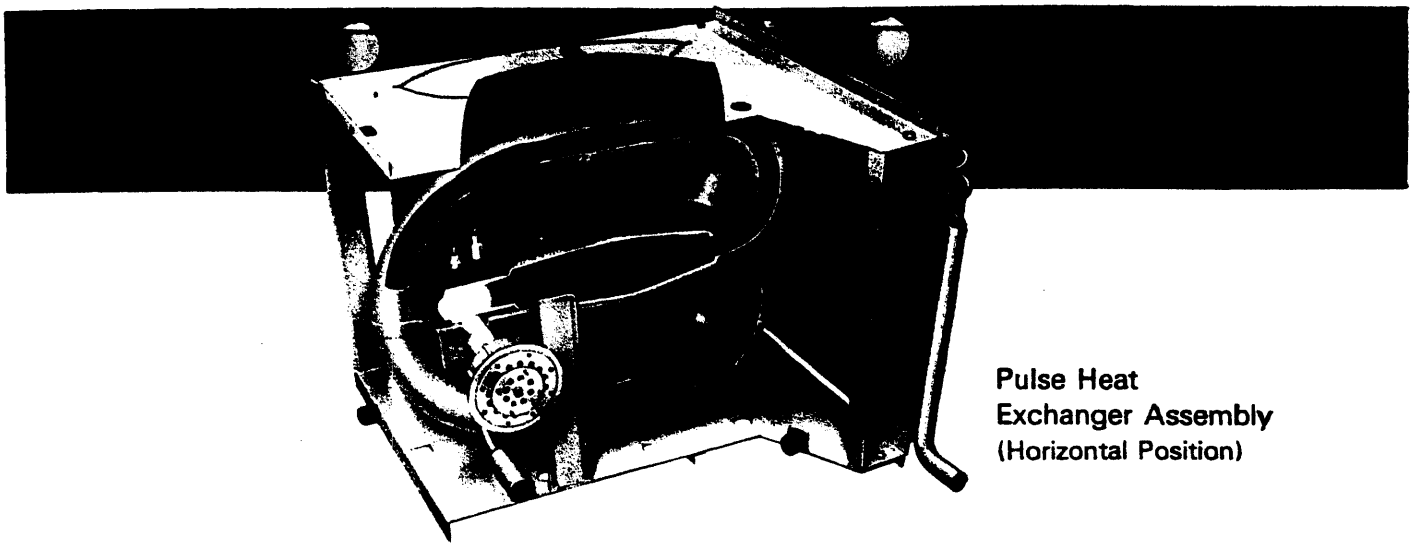

Pulse Heat
Exchanger Assembly
(Horizontal Position)

Use of 100% Outdoor Air Ensures Long Lasting Comfort

Many competitive high efficiency gas furnaces use indoor air for combustion. Chlorine present in this air can interact with condensate normally formed within the flue and have a very corrosive effect on furnace components. Since chlorine is common to most households due to the presence of chlorinated municipal water supplies, bleaches and solvents, the furnace can "self-destruct" within a very short time. The Lennox Pulse avoids this problem by using 100% outdoor air for combustion. The PVC vent and stainless steel heat exchanger, both highly corrosion resistant, offer further protection. As a result, the Pulse has an outstanding performance record with hundreds of thousands operating throughout the U.S. and Canada with no sign of corrosion in any of them.

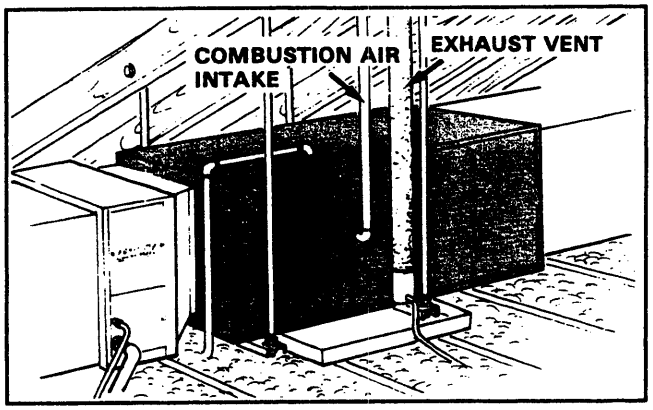

The Pulse Can Be Vented Vertically or Horizontally

Common 2-inch PVC pipe is used to bring in outdoor air for combustion, adding efficiency and eliminating corrosion problems. Vent temperatures are so cool (due to the Pulse's high heating efficiency), PVC can be used for venting, vertically or horizontally through a wall.

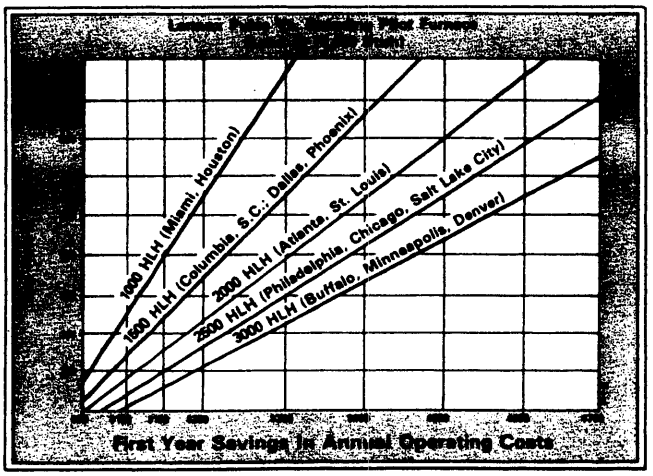

**Contact your Lennox dealer or local utility to determine your fuel cost.*
Approximate cost per therm = 100 x cost per cubic foot of gas.
HLH = Heating Load Hours

Enjoy A Quick Return On Your Investment

In many applications, a Pulse furnace can pay for itself in just a few heating seasons when it replaces a low efficiency, standing pilot furnace. The chart to the left can help you determine your approximate annual cost savings with a Lennox Pulse. Find your fuel price along the vertical column and draw a horizontal line to the diagonal that most closely represents the annual operating hours for your area. Then draw a line straight down to the base to find your approximate annual savings with the Pulse versus a standard 60% efficient furnace.

1. Stainless Steel Tailpipe
Long lasting, corrosion-resistant.

2. Combustion Chamber
Heavy cast iron construction for long life.

3. Air Intake
Outdoor air for combustion avoids corrosion, greatly enhances reliability, adds efficiency.

4. Spark Igniter
Eliminates need for standing pilot.

5. Flue Vent
Furnace can be vented with PVC vertically or horizontally.

6. Stainless Steel Condenser Coil
Corrosion resistant, captures more heat from fuel.

7. Full Cabinet Insulation
Retains heat, keeps furnace surface cool.

8. Heat Exchanger Assembly
Warranted for 20 years.

9. Air Intake, Mixing Valve & Purge Blower Assembly
Proven reliable by years of testing and research.

10. Air Filter
Helps keep indoor air clean, easy to clean or replace.

11. Gas Valve
Automatic 100% shutoff ensures safety.

12. Blower
Balanced for quiet performance.

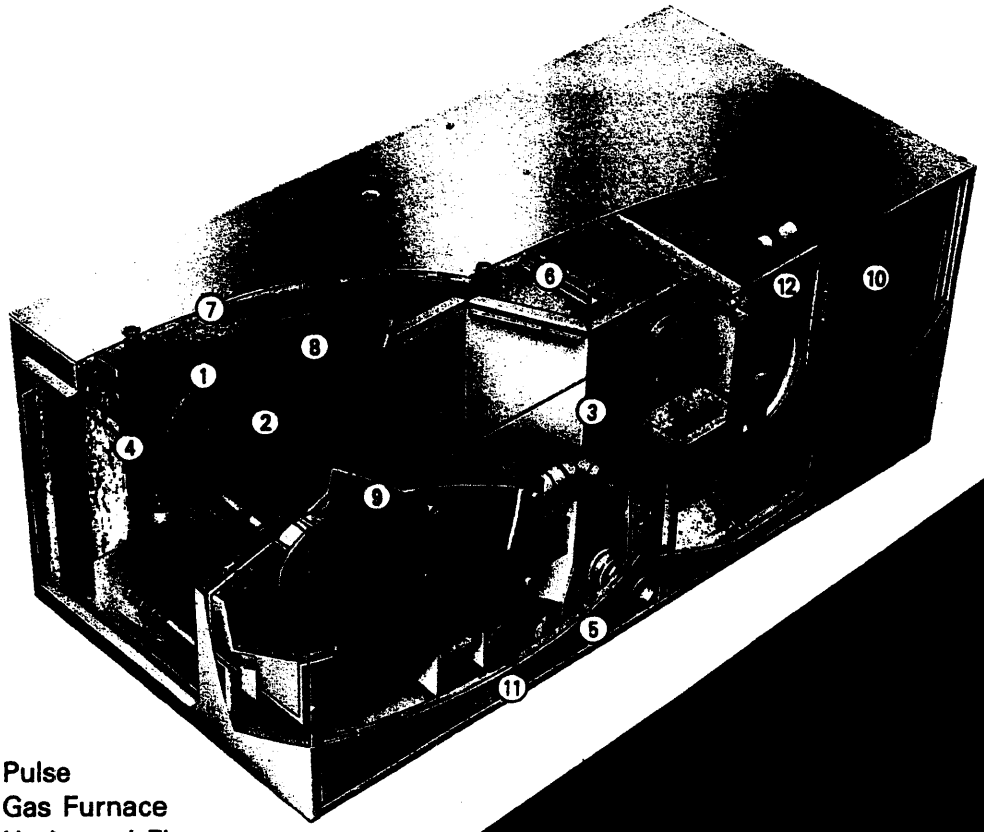

Pulse
Gas Furnace
Horizontal Flow

Warranted Heat Exchanger

The heat exchanger (*including* its condenser coil) carries a 20-year limited warranty against defects and failure. High grade components assure long lasting, reliable performance.

Versatile Applications

The compact size of the Pulse furnace allows installation in a variety of locations...closet, attic, crawl space or suspended from a ceiling. It can be vented vertically or horizontally, making it easier to locate within any floor plan.

Extensive Research and Development

The amazing efficiency of the Pulse is the result of over six years of field testing and research. Lennox technology has made the Pulse super reliable and easy to service.

Efficient Air Mover

Large volume direct drive blower moves air over entire heating surface and distributes conditioned air throughout your home. No belts to maintain or wear out. Blower motor is specially mounted to minimize vibration and sound.

Clean, Conditioned Air

An effective air filter removes dust from the air passing through it, helping keep the heat exchanger clean and efficient. Standard size makes filter replacement easy.

Capacities To Fit Most Any Home

Horizontal and down-flow Pulse furnaces are currently available in three capacities... 50,000, 80,000 and 100,000 Btuh input. They can also be used with propane gas. Up to five nominal tons of air conditioning can be installed with the furnace or added later. Pulse efficiency eliminates the need for furnace oversizing since its output capacity exceeds that of larger conventional furnaces. For example, in some applications, an 80,000 Btuh Pulse can replace a 120,000 Btuh furnace due to common oversizing practices necessary in the past. (Smaller equipment is also less expensive initially and to maintain.)

Safe Operation

The Pulse's closed combustion design and fail-safe lockout controls make it one of the safest gas furnaces ever.

Sturdy Cabinet

The attractive cabinet is constructed of cold rolled steel and undergoes a six-step paint process to ensure a lasting, even finish. It's also designed to fit into the same space and utilize the same duct openings as most previous Lennox models for easy replacement.

Easy To Service

Servicemen report the Pulse is actually easier to service than conventional furnaces. Simplified components and operation help keep routine maintenance costs low.

189

LENNOX PULSE FURNACE

Cut Your Heating Bills Almost In Half!

Gives You More Heat Per Dollar Than Ever Before

The Lennox PULSE™ gas furnace squeezes more heat from your fuel than ever before possible. It will mean a significant savings on your monthly heating bill when you replace a conventional standing pilot furnace. Here's why:

Conventional gas furnaces send 350°F to 450°F of heat up the flue due to venting requirements. But the PULSE furnace extracts 200°F to 350°F degrees more heat from the same amount of gas, so venting temperatures are much lower (about 100°F). Therefore, more of the heat you pay for is circulated inside, not wasted outdoors.

97%* Heating Efficiency

All gas furnaces require venting of combustion gases, therefore none can be 100% efficient. But if your present gas furnace is over ten years old, it is most likely in the range of 55% efficient. That means as much as 45% of the available heat is wasted outdoors and 45 cents of every heat dollar you spend goes with it.

The PULSE furnace is up to 97% efficient, with minimum heat loss due to combustion venting. So why continue to waste 45% of your heating dollars when you can cut that loss to only 3%?

Use of 100% Outdoor Air Ensures Long Lasting Comfort

Many competitive high efficiency gas furnaces use indoor air for combustion. Chlorine present in this air can interact with condensate normally formed within the flue and have a very corrosive effect on furnace components. Since chlorine is common to most households due to the presence of chlorinated municipal water supplies, bleaches and solvents, the furnace can "self-destruct" within a very short time. The Lennox PULSE avoids this problem by using 100% outdoor air for combustion. The PVC vent and stainless steel heat exchanger, both highly corrosion resistant, offer further protection. As a result, the PULSE has an outstanding performance record with hundreds of thousands operating throughout the U.S. and Canada without a sign of corrosion in any of them.

190

*Annual Fuel Utilization Efficiency (AFUE) rating as determined by Department of Energy testing standards. The higher the percentage, the more heat you receive from the same amount of fuel.

SAFETY BUILT-IN

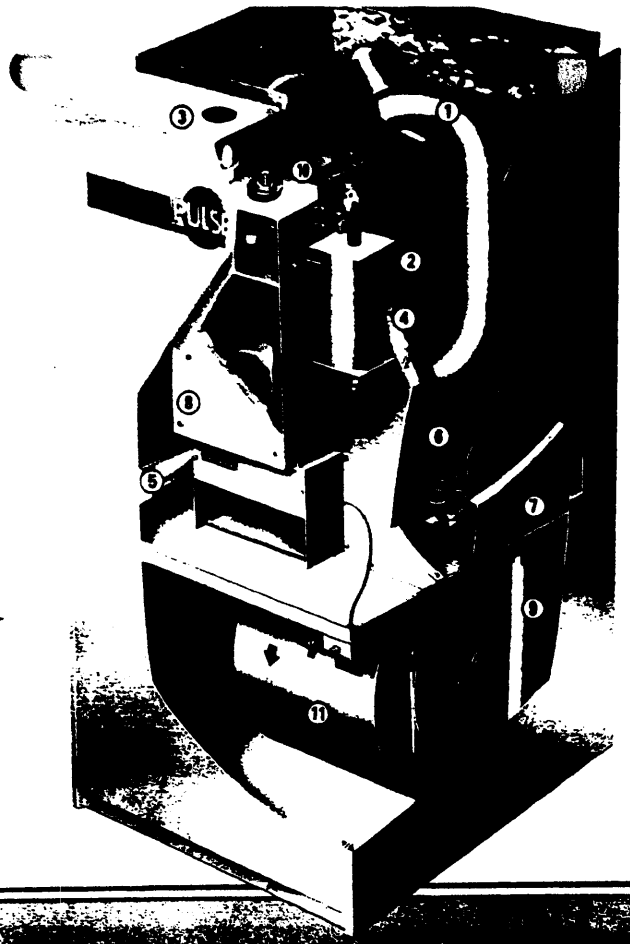

Direct Spark Ignition eliminates need for standing pilot.

Automatic Gas Valve ensures 100% shut-off if direct spark does not ignite gas in the combustion chamber.

Primary Control monitors the complete burner flame and controls multiple ignition at pre-set intervals to assure safe ignition.

Pressure Switch automatically shuts down unit if leakage occurs in air intake or exhaust line.

Up-flow Model

1. Stainless Steel Tailpipe
Long lasting, corrosion-resistant.

2. Combustion Chamber

5. Flue Vent

6. Stainless Steel Condenser Coil
Corrosion resistant, captures more heat from fuel.

7. Fan Cabinet

10. Gas Valve
Automatic 100% shut-off safety valve.

11. Blower
Balanced for quiet performance.

FEATURES

Extensive Research and Development

The amazing efficiency of the PULSE is the result of over six years of field testing and research. Lennox technology has made the PULSE super reliable and easy to service.

Versatile Applications

The compact size of the PULSE furnace facilitates installations in either a closet, attic, crawl space or basement. It can be vented vertically or horizontally, making it easier to locate within any floor plan.

Clean, Conditioned Air

An effective air filter removes dust from the air passing through it. Standard size makes filter replacement easy.

Easy To Service

Servicemen report the PULSE is actually easier to service than conventional furnaces. Simplified components and operation help keep routine maintenance costs low.

Sturdy Cabinet

The attractive cabinet is constructed of cold rolled steel and undergoes a six-step paint process to ensure a lasting, even finish. It's also designed to fit into the same space and utilize the same duct openings as most previous Lennox up-flow models for easy replacement.

Safe Operation

The PULSE'S closed combustion design and fail-safe lockout controls make it one of the safest gas furnaces ever.

Efficient Air Mover

Large volume direct drive blower moves air over entire heating surface and distributes conditioned air throughout your home. No belts to maintain or wear out. Blower motor is specially mounted to minimize vibration and sound.

Capacities To Fit Most Any Home

The PULSE is currently available in five capacities. . . 40,000; 50,000; 60,000; 80,000 and 100,000 Btuh input. It can also be used with propane gas. Up to five nominal tons of air conditioning can be installed with the furnace or added later. PULSE efficiency eliminates the need for furnace oversizing since its output capacity exceeds that of larger conventional furnaces. For example, in some applications, a 60,000 Btuh PULSE can replace a 120,000 Btuh furnace due to common oversizing practices necessary in the past. (Smaller equipment is also less expensive initially and to maintain.)

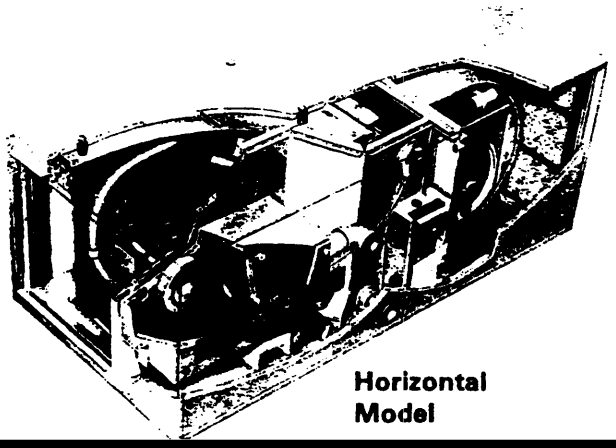

Horizontal Model

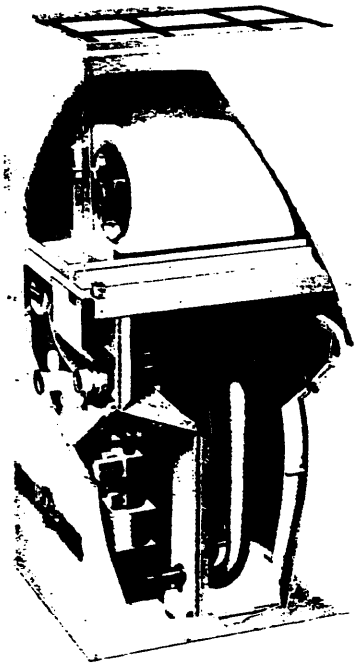

Down-flow Model

The PULSE Can Be Vented Vertically or Horizontally

With virtually no venting or corrosion problems, the PULSE offers you many years of trouble-free operation. Only two-inch PVC pipe is needed for venting (either horizontally or vertically through a wall). One size fits both intake and exhaust lines.

You can actually feel the efficiency of the PULSE by touching the PVC pipe. It's not hot. The low 140°F — 130°F temperatures mean that the heat is going to your home, not up the vent.

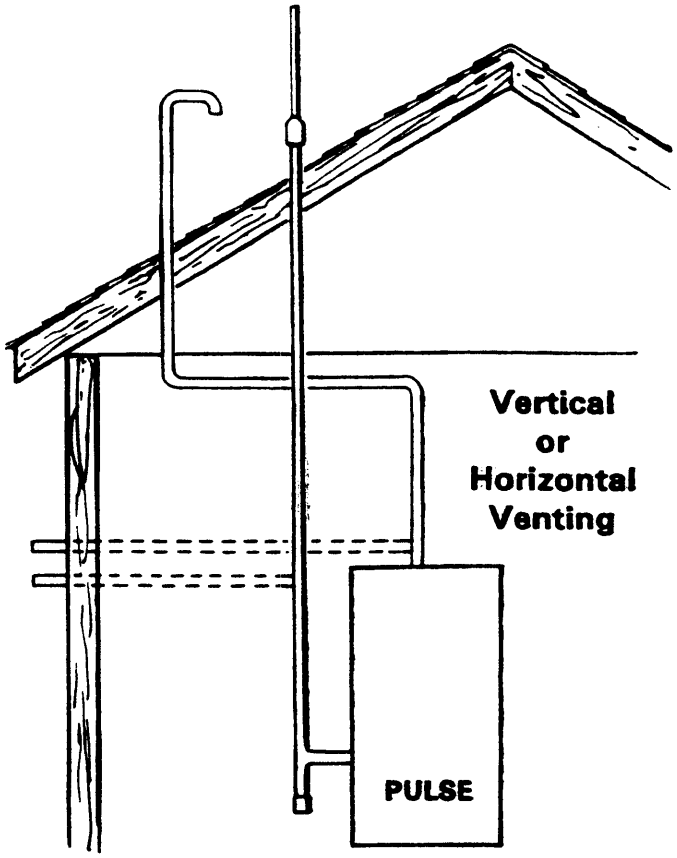

NOTE — All installations subject to local code requirements.

Award-winning EFFICIENCY.

Year After Year, Savings Just Keep Adding Up!

Year	Miami Houston	Phoenix Columbus, SC Dallas	St. Louis Atlanta	Philadelphia Chicago Salt Lake City	Buffalo Denver Minneapolis
1	$ 180	$ 278	$ 372	$ 464	$ 556
2	360	556	744	928	1,112
3	540	834	1,116	1,392	1,668
4	720	1,112	1,488	1,856	2,224
5	900	1,390	1,860	2,320	2,780
6	1,080	1,668	2,232	2,784	3,336
7	1,260	1,946	2,604	3,248	3,892
8	1,440	2,224	2,976	3,712	4,448
[illegible]	[illegible]	[illegible]	3,348	[illegible]	5,004
[illegible]	1,800	2,780	3,720	[illegible]	5,560

PULSE (95% AFUE) vs Furnace with 60% AFUE
Load @ 70,000 Btuh Gas Rate = 60¢/Therm
Savings figures are cumulative (not allowing for inflation).
Actual figures may vary in your area depending on weather conditions and family lifestyles.

Service You Can Count On

Lennox has been building comfort equipment for 90 years and has grown to develop the most advanced home comfort equipment in the world. But just as important is the excellent service you get from your independent Lennox dealer. He's one of over 6,000 nationwide, dedicated to giving you prompt, courteous service. His installation and service integrity help ensure the high quality performance you expect from an industry leader.

LENNOX
THE EFFICIENCY EXPERTS

Convenient Purchase Plan

Best of all, you can apply for the Lennox Convenient Purchase Plan and enjoy a major line of credit with no money down. Discover how easy it is to pay for your Lennox system with low monthly payments while it's saving you money on your heating bills.

Made In The USA

LENNOX
THE EFFICIENCY EXPERTS™

©1986 Lennox Industries Inc.

E.I.R. EXHIBIT 11
MR. Lennox
DATE 1/8+20/8 INSPECTOR Z Gas

LENNOX®

G14 SERIES PULSE™ UP-FLO GAS FURNACES

40,000 to 100,000 Btuh Input
Add-On Cooling 1-1/2 thru 5 Nominal Tons

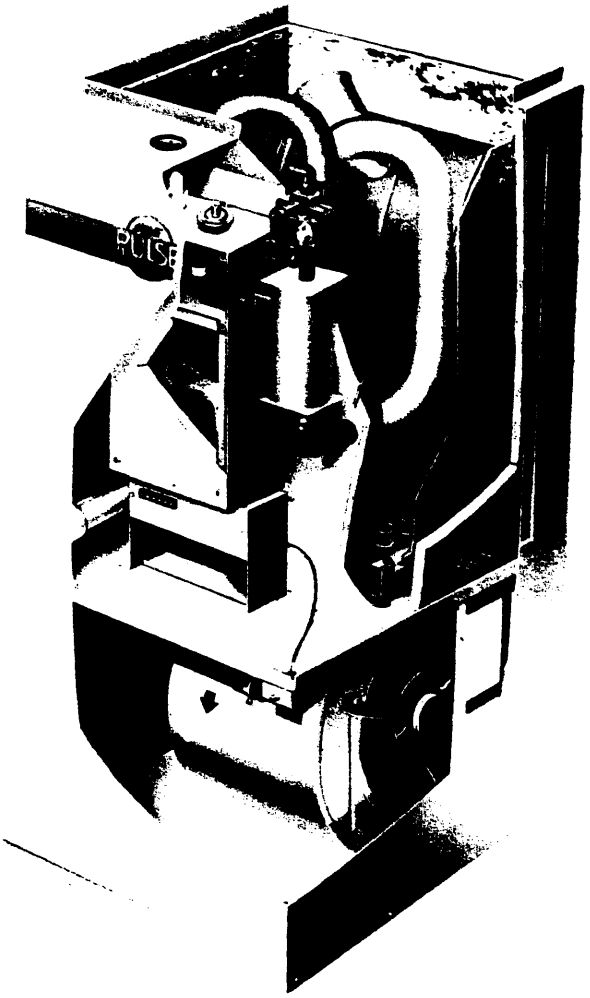

Lennox Pulse Combustion Design Provides Heating Efficiency Up to 97%

The Lennox G14 series pulse combustion up-flo gas furnaces provide efficiencies (AFUE) of up to 97%. Eight models (natural gas or LPG) are available with input capacities of 40,000, 60,000, 80,000 and 100,000 Btuh. The units operate on the pulse combustion principle and do not require a pilot burner, main burners, conventional flue or chimney. Compact, standard size cabinet design, with side or bottom return air entry, permits installation in a basement, utility room or closet. Lennox add-on evaporator coils, electronic air cleaners and power humidifiers can easily be added to the furnace for Total Comfort all season installations. Additionally, replacement of most Lennox furnaces manufactured by Lennox in the last 20 years can be accomplished with only minor modifications to ductwork or add-on cooling coils.

The high efficiency of the G14 line of furnaces is achieved through a unique heat exchanger design which features a finned cast iron combustion chamber, temperature resistant steel tailpipe, aluminized steel exhaust decoupler section and a finned stainless steel tube condenser coil similar to an air conditioner coil. Moisture, in the products of combustion, is condensed in the coil thus wringing almost every usable Btu out of the gas. Since most of the combustion heat is utilized in the heat transfer from the coil, flue vent temperatures are as low as 100°F to 130°F allowing the use of 2 inch diameter PVC (polyvinyl chloride) pipe for venting. The furnace can be vented through a side wall, roof or to the top of an existing chimney with up to 35 ft. of PVC pipe and four 90 degree elbows. Condensate created in the coil may be disposed of in an indoor drain. The condensate (PH ranges from 4.0 to 6) is not harmful to standard household plumbing and can be drained into city sewers and septic tanks without damage.

The G14 furnace has no pilot light or burners. An automotive type spark plug is used for ignition on the initial cycle only, saving gas and electrical energy. Due to the pulse combustion principle the use of atmospheric gas burners is eliminated with the combustion process confined to the heat exchanger combustion chamber. The sealed combustion system virtually eliminates the loss of conditioned air due to combustion and stack dilution. Combustion air is piped to the furnace with same type PVC pipe as used for exhaust gases.

The furnace is equipped with a standard type redundant gas valve in series with a gas expansion tank, gas intake flapper valve and air intake flapper valve. Also factory installed are a purge blower, spark plug igniter and flame sensor with solid-state control circuit board.

Furnished with the G14 furnace as standard equipment are a fan and limit control, 30 VA transformer, blower cooling relay, flexible gas line connector, (4) isolation mounting pads, base insulation pad, condensate drip leg and cleanable air filter. Flue vent/air intake line roof or wall termination installation kits, LPG conversion kits and thermostat are available as accessories and must be ordered extra.

G14 units are shipped completely factory assembled with all controls installed and wired. In addition, the units are fire tested at the factory and require no field adjustments on start up.

Typical Applications

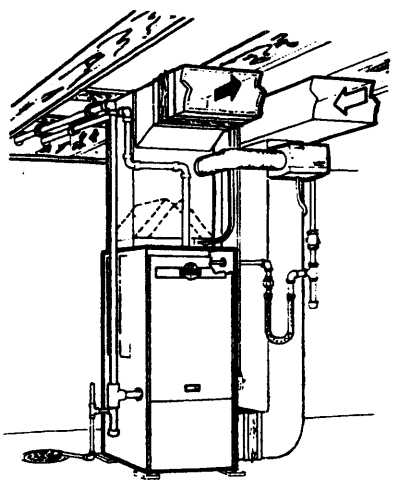

Basement Installation with Cooling Coil and Automatic Humidifier

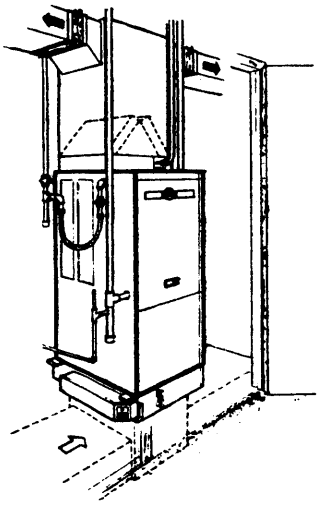

Closet Installation with Cooling Coil and Electronic Air Cleaner

195

Ratings and Dimensions subject to change without notice.

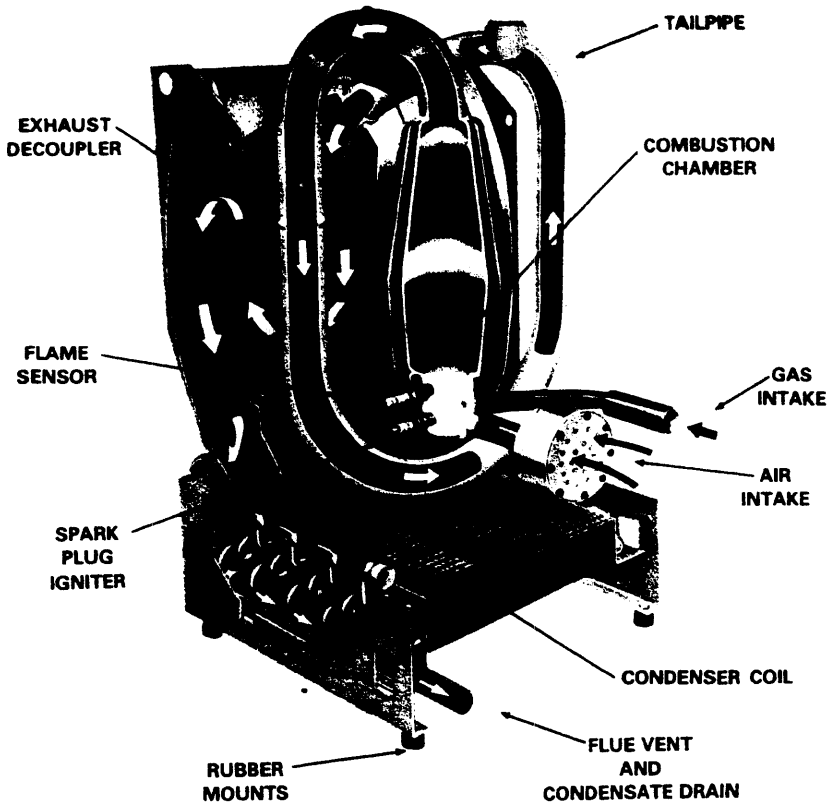

PROCESS OF COMBUSTION

The process of pulse combustion begins as gas and air are introduced into the sealed combustion chamber with the spark plug igniter. Spark from the plug ignites the gas/air mixture, which in turn causes a positive pressure buildup that closes the gas and air inlets. This pressure relieves itself by forcing the products of combustion out of the combustion chamber through the tailpipe into the heat exchanger exhaust decoupler and on into the heat exchanger coil. As the combustion chamber empties, its pressure becomes negative drawing in air and gas for ignition of the next pulse of combustion. At the same instant, part of the pressure pulse is reflected back from the tailpipe at the top of combustion chamber. The flame remnants of the previous pulse of combustion ignites the new gas/air mixture in the chamber, continuing the cycle. Once combustion is started, it feeds upon itself allowing the purge blower and spark plug igniter to be turned off. Each pulse of gas/air mixture is ignited at a rate of 60 to 70 times per second producing from one-fourth to one-half of a Btu per pulse of combustion. Almost complete combustion occurs with each pulse. The force of these series of ignitions creates great turbulence which forces the products of combustion through the entire heat exchanger assembly resulting in maximum heat transfer.

FEATURES

Sequence of Operation — The room thermostat on a demand for heat will initiate purge blower operation for a prepurge cycle (34 seconds) followed by energizing of ignition and opening of the gas valve. As ignition occurs the flame sensor senses proof of ignition and de-energizes the spark igniter and purge blower. Furnace blower operation is initiated 30 to 45 seconds after combustion ignition. When thermostat is satisfied, gas valve closes and purge blower is re-energized for a post purge cycle (34 seconds). Furnace blower will remain in operation until preset temperature setting (90°F) of fan control is reached. Should loss of flame occur before thermostat is satisfied, flame sensor controls will initiate 3 to 5 attempts at re-ignition before locking out unit operation. Additionally, loss of either combustion intake air or flue exhaust will automatically shut the system down.

Heat Exchanger Assembly — Lennox developed heat exchanger assembly consists of combustion chamber, tailpipe, exhaust decoupler section and condenser coil. Combustion chamber contains the spark plug igniter, flame sensor, combustion air and gas intake manifolds. Cast iron construction provides excellent radiation of heat over entire surface area. Finned, "teardrop" shape design permits total air coverage of all surfaces with low resistance. Tailpipe connects the combustion chamber to the exhaust decoupler section. Precisely sized and shaped tailpipe is constructed of combination stainless and aluminized steel for superior resistance to high temperatures. Aluminized steel resonator on tailpipe minimizes combustion sound. Heavy gauge aluminized steel exhaust decoupler section has large surface area for maximum heat transfer. Air foil shape design results in complete air coverage with minimum resistance. Condenser coil intake header connects to bottom of exhaust decoupler section. Large face area and circuiting of coil provides high heat transfer, minimum air resistance and proper moisture drainage. Coil is constructed of exactly spaced ripple-edged aluminum fins fitted to stainless steel tubes. Flared collars on fins grip tubes for maximum contact area. Flared tubing connections and high temperature soldering provide tight, leakproof joints. Combined flue vent and condensate drain outlet is located on the coil. Coil is factory tested for leaks. All components are mounted in a heavy gauge steel frame and installed in the furnace cabinet on resilient rubber mounts assuring quiet, vibration free operation. Heat exchanger has been laboratory life cycle tested.

Rugged Cabinet — Constructed of heavy gauge cold roll steel. Cabinet is subject to a five station metal wash process resulting in a perfect bonding surface for a paint finish of baked-on enamel. The paint solution and metal are given opposite electrical charges resulting in positive adhesion and even coverage of the paint to the metal surfaces. Heat exchanger section is completely lined with thick (1-1/2 lb. density) foil faced fiberglass insulation. This results in quiet and efficient operation due to the excellent acoustical and insulating qualities of fiberglass. Complete service access is accomplished by removing heating section and blower access panels. Removable panel is provided in vestibule panel for access to the spark plug and flame sensor. Holes are located in base for leveling unit. Leveling bolts and nuts are not furnished and must be ordered extra. Safety interlock switch automatically shuts power off to unit when blower access panel is removed. Blower assembly may be completely removed from unit for service. Electrical inlets, gas line inlets and flue vent outlets are provided in both sides of the cabinet. Combustion air inlet opening is located in cabinet cap. Return air duct connection can be made on either side or bottom of cabinet.

196

FEATURES (Continued)

Powerful Blowers — Units are equipped with quiet variable speed direct drive blowers. Each blower assembly is statically and dynamically balanced. Multiple-speed motor is resiliently mounted. A choice of blower speeds is available on each blower. See blower performance charts. Change in blower speed is easily accomplished by simple wiring change.

Cleanable Air Filter — Washable or vacuum cleanable frame type filter is furnished as standard. Polyurethane media is coated with oil for maximum efficiency. Filter is readily accessible in unit for quick and easy removal for servicing.

Combustion Air Intake Box — Contains the purge blower, air intake flapper valve and two pressure switches on the 40, 60 and 80 units. The 100 models have a single differential pressure switch mounted on the vestibule panel. Box is located on vestibule panel. Purge blower is equipped with a permanently lubricated motor. Blower operates only during pre-purge and post purge cycles. Air is drawn through the blower during the combustion cycle by negative pressure in the combustion chamber. Pressure switches terminate unit operation in case of air intake or flue exhaust blockage. Flapper valve section of the box is completely lined with 1 inch thick (6 lb. density) duct liner board, black neoprene coated fiberglass. Valve opening and closing is actuated by back pressure and negative pressure in combustion chamber during the heating cycle.

Automatic Gas Valve, Expansion Tank and Gas Intake Flapper Valve — 24 volt redundant dual gas control valve combines gas pressure regulation and manual main shut-off valve into a compact combination control. Dual valve design provides double assurance of 100% close off of gas on each heating cycle. Expansion tank is located downstream from the gas valve and absorbs any pressure pulsations. Gas intake flapper valve is installed in the combustion chamber intake manifold between the orifice and expansion tank. Valve is opened by entering gas pressure and closed off by back pressure from combustion pulse during the heating cycle.

Wiring Junction Box — Power supply and thermostat wiring connections are made at the wiring junction box conveniently located on the vestibule panel. Box contains 30 VA transformer, high and low voltage terminal strips and blower cooling relay. Terminal strip permits easy connections for optional power humidifier and electonic air cleaner accessories. Blower cooling relay activates blower operation for add-on air conditioning cooling cycles.

Fan and Limit Controls — Factory installed and accurately located on vestibule. Fixed limit control provides protection from abnormal operating conditions. Fan control brings blower on 30 to 45 seconds after combustion ignition and shuts blower off at factory temperature setting of 90°F.

In-Line Mufflers — Two mufflers are furnished as standard equipment with the G14Q3-100 and G14Q4/5-100 models. Mufflers field install, vertical or horizontal, one in the intake line and one in the exhaust line. The two mufflers (LB-52057CA) are optional with all other models and must be ordered extra.

LPG Conversion Kits (Optional) — For LPG field models a conversion kit is required for field changeover from natual gas. Kit is not furnished and must be ordered extra. See Specification table.

Thermostat (Not Furnished) — Heating thermostat is optional equipment and must be ordered extra. For all-season applications, heating-cooling thermostat is available with the condensing unit.

Vent/Intake Air Roof Termination Kit (Optional) — Facilitates installation of combustion air intake pipe and flue exhaust pipe. Kit contains 2 neoprene rubber roof flashings and 18 inch insulation sleeve for sealing and isolating intake and exhaust piping penetration in roof. Kit LB-49107CC must be ordered extra.

Vent/Intake Air Wall Termination Kit (Optional) — Facilitates installation of combustion air intake pipe and flue exhaust pipe. Kit must be ordered extra. Select one of the following.

1 — Kit (LB-49107CB) contains 2 stainless steel outside seal caps, 2 galvanized steel inside seal caps, 4 seal rings for the caps and 18 inch insulation sleeve for sealing and isolating intake and exhaust piping penetration of wall. Maintain a maximum of 6 inches between the inlet and outlet openings in the installation of the pipes.

2 — Kit (LB-49107CD) contains factory assembled close-couple side-by-side PVC piping with galvanized steel wall cover plate for sealing and isolating piping penetration of the wall. Piping spacing and length is sized for proper wall installations. A.G.A. certified.

Approvals — The G14 series furnaces are design certified by A.G.A. Laboratories and ratings are certified by GAMA. Units meet the California Nitrogen Oxides (NO_X) standards and California Seasonal Efficiency requirements. In addition, units have been rated and tested in the Lennox Research Laboratory according to Department of Energy (DOE) test procedures. Blower data is from unit tests conducted in the Lennox Laboratory air test chamber.

Installation Recommendations — Lennox recommends the following installation procedures to minimize any vibration transmitted from furnace during operation. Place (4) neoprene rubber isolation mounting pads (furnished) and/or base insulation pad, 1 inch thick, 1-1/2 lb. density fiberglass (furnished), under the unit. Install flexible duct connectors in the supply air plenum and return air plenum or duct connection. Insulate (1 inch thick, 1-1/2 to 3 lb. density, matt faced fiberglass) supply and return air plenums through take-off or duct elbow. Use flexible connector (furnished) in gas supply piping where allowed by local codes. Insulate (refrigerant piping insulation or equivalent) all straps and hangers used in suspending ducts, electrical conduit, gas piping, combustion air intake piping and flue exhaust piping. In addition, use plastic pipe or tubing for drain line from the heat coil condensate drain leg (furnished) to the drain, do not use copper tubing.

SPECIFICATIONS

Model No.	G14Q3-40	G14Q3-60	G14Q4-60
Input Btuh	40,000	60,000	60,000
Output Btuh	38,000	55,000	55,000
†A.F.U.E.	97.0%	93.0%	93.0%
High static A.G.A. (in. wg.)	.50	.50	.50
California Seasonal Efficiency	90.0%	87.2%	85.6%
Temperature rise range (°F)	35 – 65	40 – 70	35 – 65
Vent/Intake air pipe size (in.)	2	2	2
Gas pipe size I.P.S. (in.) Natural & *LPG	1/2	1/2	1/2
Condensate drain connection (SDR11)	1/2	1/2	1/2
Blower wheel nominal diameter x width (in.)	10 x 8	10 x 8	11 x 9
Blower motor hp	1/3	1/3	1/2
Number and size of filters (in.)	(1) 16 x 25 x 1	(1) 16 x 25 x 1	(1) 16 x 25 x 1
Tons of cooling (Add-on)	1-1/2 – 3	1-1/2 – 3	2-1/2 – 4
Shipping weight (lbs.)	250	250	255
No. of packages in shipment	1	1	1
Electrical characteristics	120 volts – 60 hertz – 1 phase (less than 12 amps)		
*LPG Kit (optional)	LB-51702CR	LB-51702CN	LB-51702CN

†Annual Fuel Utilization Efficiency based on DOE test procedures.
*For LPG units a field changeover kit is required and must be ordered extra.

SPECIFICATIONS

Model No.	G14Q3-80	G14Q4-80	G14Q5-80	G14Q3-100	G14Q4/5-100
Input Btuh	80,000	80,000	80,000	100,000	100,000
Output Btuh	74,000	74,000	74,000	93,000	95,000
†A.F.U.E.	93.0%	93.0%	93.0%	93.0%	95.0%
High static A.G.A. (in. wg.)	.50	.50	.50	.50	.50
California Seasonal Efficiency	87.3%	86.4%	86.6%	87.8%	88.1%
Temperature rise range (°F)	45 – 75	40 – 70	35 – 65	45 – 75	40 – 70
Vent/Intake air pipe size (in.)	2	2	2	2	2
Gas pipe size I.P.S. (in.) Natural & *LPG	1/2	1/2	1/2	1/2	1/2
Condensate drain connection (SDR11)	1/2	1/2	1/2	1/2	1/2
Blower wheel nominal diameter x width (in.)	10 x 8	11 x 9	12 x 12	10 x 8	12 x 12
Blower motor hp	1/3	1/2	3/4	1/2	3/4
Number and size of filters (in.)	(1) 16 x 25 x 1	(1) 16 x 25 x 1	(1) 20 x 25 x 1	(1) 20 x 25 x 1	(1) 20 x 25 x 1
Tons of cooling (Add-on)	2 – 3	2-1/2 – 4	4 or 5	2 – 3	3-1/2 – 5
Shipping weight (lbs.)	250	255	297	297	297
No. of packages in shipment	1	1	1	**2	**2
Electrical characteristics	120 volts – 60 hertz – 1 phase (less than 12 amps)				
*LPG Kit (optional)	LB-51702CP	LB-51702CP	LB-51702CP	LB-51702CC	LB-51702CC

†Annual Fuel Utilization Efficiency based on DOE test procedures.
* For LPG units a field changeover kit is required and must be ordered extra.
** Packages consist of assembled unit and in-line mufflers.

HIGH ALTITUDE DERATE

If the heating value of the gas does not exceed values listed in the table, derating of the unit is not required. Should the heating value of the gas exceed the table values, or if the elevation is greater than 6,000 feet above sea level it will be necessary to derate the unit. Lennox requires that derate conditions be 4% per thousand feet above sea level. Thus at an altitude of 4000 feet, if the heating value of the gas exceeds 1000 Btu/ft³, unit will require a 16% derate.

Elevation Above Seal Level (feet)	Maximum Heating Value (Btuh/ft³)
5001 – 6000	900
4001 – 5000	950
3001 – 4000	1000
2001 – 3000	1050
Sea Level – 2000	1100

198

LMP

BLOWER DATA

G14Q3-40, G14Q3-60 AND G14Q3-80 BLOWER PERFORMANCE

External Static Pressure (in. wg.)	Air Volume (cfm) @ Various Speeds		
	High	Medium	Low
0	1585	1392	920
.05	1558	1364	917
.10	1533	1354	915
.15	1505	1335	912
.20	1477	1315	905
.25	1447	1294	893
.30	1418	1272	887
.40	1355	1223	858
.50	1282	1164	803

NOTE — All cfm is measured external to the unit with the air filter in place.

G14Q4-60 AND G14Q4-80 BLOWER PERFORMANCE

External Static Pressure (in. wg.)	Air Volume (cfm) @ Various Speeds		
	High	Medium	Low
0	1793	1295	1050
.05	1770	1290	1050
.10	1747	1285	1050
.15	1724	1280	1050
.20	1700	1275	1050
.25	1675	1267	1050
.30	1648	1258	1050
.40	1585	1233	1036
.50	1517	1193	1012

NOTE — All cfm is measured external to the unit with the air filter in place.

G14Q5-80 BLOWER PERFORMANCE

External Static Pressure (in. wg.)	Air Volume (cfm) @ Various Speeds				
	High	Med-High	Medium	Med-Low	Low
0	2460	2350	2155	1900	1695
.05	2430	2310	2130	1875	1675
.10	2395	2275	2100	1855	1655
.15	2355	2240	2065	1825	1625
.20	2315	2205	2035	1800	1600
.25	2275	2175	1995	1780	1570
.30	2235	2130	1960	1740	1540
.40	2155	2055	1880	1675	1480
.50	2070	1970	1790	1605	1410
.60	1980	1890	1710	1540	1345

NOTE — All cfm is measured external to the unit with the air filter in place.

G14Q3-100 BLOWER PERFORMANCE

External Static Pressure (in. wg.)	Air Volume (cfm) @ Various Speeds		
	High	Medium	Low
0	1850	1660	1500
.05	1805	1635	1470
.10	1760	1610	1440
.15	1720	1575	1420
.20	1680	1540	1400
.25	1635	1505	1375
.30	1590	1470	1350
.40	1500	1400	1290
.50	1400	1320	1220
.60	1290	1230	1140

NOTE — All cfm is measured external to the unit with the air filter in place.

G14Q4/5-100 BLOWER PERFORMANCE

External Static Pressure (in. wg.)	Air Volume (cfm) @ Various Speeds				
	High	Med-High	Medium	Med-Low	Low
0	2450	2340	2140	1910	1690
.05	2420	2310	2110	1880	1670
.10	2390	2270	2080	1860	1640
.15	2350	2240	2050	1830	1620
.20	2320	2210	2020	1800	1590
.25	2280	2170	1990	1770	1570
.30	2250	2140	1960	1740	1540
.40	2180	2060	1890	1680	1480
.50	2100	1980	1810	1610	1420
.60	2005	1890	1740	1530	1350

NOTE — All cfm is measured external to the unit with the air filter in place.

A.G.A. INSTALLATION CLEARANCES (inches)

Front, Top, Sides, Rear	1 inch
Floor	Combustible
Exhaust Pipe	0 inches
Exhaust Pipe Side	6 inches (Service Only)

DIMENSIONS (inches)

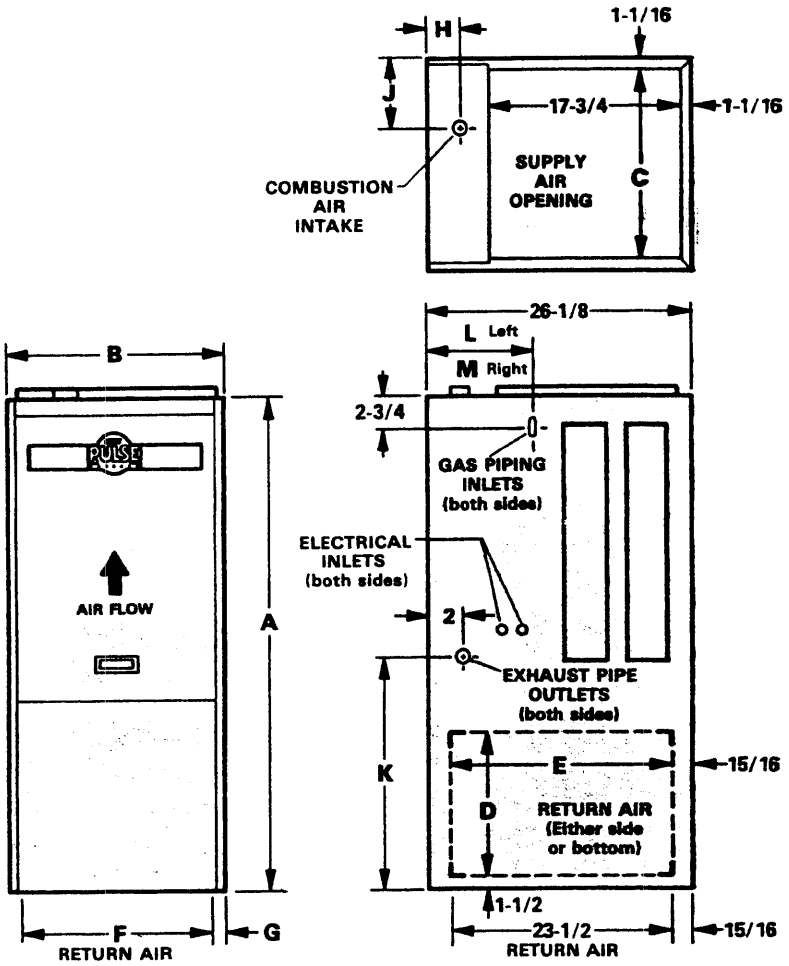

Model No.	G14Q3-40 G14Q3-60 G14Q3-80	G14Q4-60 G14Q4-80	G14Q3-100	G14Q5-80 G14Q4/5-100
A	49	49	53	53
B	21-1/4	21-1/4	26-1/4	26-1/4
C	19-1/8	19-1/8	24-1/8	24-1/8
D	14-1/2	14-1/2	18-1/2	18-1/2
E	18-1/2	23-1/2	18-1/2	23-1/2
F	14-1/2	14-1/2	18-1/2	18-1/2
G	3-3/8	3-3/8	3-7/8	3-7/8
H	4-1/8	4-1/8	1-15/16	1-15/16
J	8-1/2	8-1/2	11	11
K	20-1/4	20-1/4	24-1/4	24-1/4
L	7-1/4	7-1/4	4-1/2	4-1/2
M	5-1/4	5-1/4	4-1/2	4-1/2

200