Paragraph 6002 Class E airspace areas designated as a surface area for an airport.

* * * * *

AGL ND E2 Minot, ND [Revised]

Minot International Airport, ND
(Lat. 48°15′34″N., long. 101°16′52″W.)
Minot VORTAC
(Lat. 48°15′37″N., long. 101°17′13″W.)

Within a 4.2-mile radius of the Minot International Airport and within 3.5 miles each side of the Minot VORTAC 129° radial, extending from the 4.2-mile radius of the airport to 7.0 miles southeast of the VORTAC, and within 3.5 miles each side of the Minot VORTAC 260° radial, extending from the 4.2-mile radius of the airport to 7.0 miles west of the VORTAC, and within 3.5 miles each side of the Minot VORTAC 327° radial, extending from the 4.2-mile radius of the airport to 7.0 miles northwest of the VORTAC, and within 3.5 miles each side of the Minot VORTAC 097° radial, extending from the 4.2-mile radius to 7.0 miles east of the VORTAC, excluding the portion which overlies the Minot AFB, ND, Class D airspace area. This Class E airspace area is effective during the specific dates and times established in advance by a Notice to Airman. The effective date and time will thereafter be continuously published in the Airport/facility Directory.

* * * * *

Issued in Des Plaines, Illinois on February 16, 1999.

David B. Johnson,

Acting Manager, Air Traffic Division.

[FR Doc. 99–5250 Filed 3–2–99; 8:45 am]

BILLING CODE 4910–13–M

CONSUMER PRODUCT SAFETY COMMISSION

16 CFR Parts 1213, 1500, and 1513

Bunk Beds; Notice of Proposed Rulemaking

AGENCY: Consumer Product Safety Commission.

ACTION: Notice of proposed rulemaking.

SUMMARY: The Consumer Product Safety Commission (''CPSC'' or ''Commission'') has reason to believe that unreasonable risks of injury and death are associated with bunk beds that are constructed so that children can become entrapped in the beds' structure or become wedged between the bed and a wall.

This notice proposes a rule mandating bunk bed performance requirements to reduce this hazard. This rule would be issued under both the Federal Hazardous Substances Act (''FHSA''), for bunk beds intended for use by children, and the Consumer Product Safety Act (''CPSA''), for beds not intended for children. The Commission solicits written comments and will provide an opportunity for oral comments from interested persons.

DATE: Written comments in response to this notice must be received by the Commission by May 17, 1999. The Commission will announce an opportunity for oral presentations of comments in a separate **Federal Register** notice to be published later.

ADDRESSES: Written comments, should be mailed, preferably in five copies, to the Office of the Secretary, Consumer Product Safety Commission, Washington, D.C. 20207–0001, or delivered to the Office of the Secretary, Consumer Product Safety Commission, Room 502, 4330 East-West Highway, Bethesda, Maryland; telephone (301) 504–0800. Comments also may be filed by telefacsimile to (301) 504–0127 or by email to cpsc-os@cpsc.gov. Written comments should be captioned ''NPR for Bunk Beds.''

FOR FURTHER INFORMATION CONTACT: Concerning the substance of the proposed rule: John Preston, Directorate for Engineering Sciences, Consumer Product Safety Commission, Washington, D.C. 20207; telephone (301) 504–0494, ext. 1315.

SUPPLEMENTARY INFORMATION:

A. Background; History of Voluntary Standards Activities

Bunk beds have been long recognized as a potential source of serious injury to children. In 1978, an Inter-Industry Bunk Bed Safety Task Group developed a Bunk Bed Safety Guideline for voluntary use by manufacturers and retailers of bunk beds intended for home use. Members of this group included the National Association of Bedding Manufacturers, the National Association of Furniture Manufacturers, the Southern Furniture Manufacturers Association, and the National Home Furnishings Association. The guideline became effective on January 1, 1979.

In February 1981, an American National Standard for Bedding Products and Components (ANSI Z357.1) was published. For the most part, this standard contained dimensional requirements for mattresses and foundations for all beds. However, it also incorporated the requirements of the January 1, 1979, industry safety guideline for bunk beds. In May 1986, the American Furniture Manufacturer's Association (''AFMA'') published Voluntary Bunk Bed Safety Guidelines developed by the Inter-Industry Bunk Bed Committee (''IIBBC'').

On August 26, 1986, the Consumer Federation of America (''CFA'') filed a petition with CPSC requesting the promulgation of a mandatory safety regulation for bunk beds. In its petition, CFA cited three different risks of injury posed by bunk beds: inadequate mattress supports that can allow the mattress to fall to the bunk below or to the floor, entrapment in the space between the guardrails and the mattress, and entrapment between the bed and the wall. CFA alleged that the voluntary industry guidelines did not fully address the hazards posed to consumers.

In July 1988, AFMA published Revised Voluntary Bunk Bed Safety Guidelines, with an effective date of April 1989. A majority of the revisions were made as a result of CPSC staff comments on the May 1986 guidelines, which included comments that the requirements addressing entrapment in openings in guardrails were not adequate and that bunk beds should be required to be sold with two guardrails. To prevent entrapment, the 1989 revised guidelines did require two guardrails to accompany a bunk bed, and required that any opening in the structure of the upper bunk be less than 3½ inches in width.

On July 21, 1988, the Commission voted to deny the petition filed by the CFA, but directed its staff to prepare a letter to AFMA urging that it reconsider the CPSC staff's comments that had not been included in the Revised Voluntary Bunk Bed Safety Guidelines. That letter was sent in August 1988. It also requested (a) that AFMA consider additional staff recommendations, (b) that AFMA submit the revised guidelines to a voluntary standards organization such as ANSI or ASTM for development as a voluntary safety standard, and (c) that AFMA develop, and provide to the Commission, a plan and proposed implementation date for a certification program to ensure that bunk beds comply with the guidelines. AFMA responded that a certification program would be established upon publication of an ASTM bunk bed standard.

In October 1992, ASTM published the Standard Consumer Safety Specification for Bunk Beds, ASTM F1427–92, in response to the Commission's August 1988 request. The performance requirements in that standard primarily addressed falls from the upper bunk, entrapment in the upper bunk structure or between the upper bunk and a wall, and security of the foundation support system. The standard also had a requirement for a warning label and for instructions to accompany the bed. In June 1994, the ASTM bunk bed standard was republished with additional provisions (requested by CPSC staff) to address collapse of tubular metal bunk

beds. The most current version of the ASTM bunk bed standard was published in September 1996 and contains additional revisions suggested by CPSC staff. These address entrapment in lower-bunk end structures; mattress size information on the warning label and carton; and the name and address of the manufacturer, distributor, or seller on the bed. To protect children from entrapment, the ASTM standard requires that:

- There be guardrails on both sides of the upper bunk, except for up to 15 inches at the ends of the bed;
- Openings in the structure surrounding the upper bunk be small enough to prevent passage of a tapered block having a base measuring 3.5 inches by 6.2 inches;
- Openings in the end structures within a height of 9 inches above the sleeping surface of the lower bunk mattress be either small enough to prevent passage of a tapered block having a base measuring 3.5 inches by 6.2 inches or large enough to permit passage of a 9-inch diameter sphere.

Despite these voluntary efforts, the Commission, over the last 4 years, has recalled over one-half million bunk beds that did not conform to the entrapment requirements in the ASTM F1427–96 standard (ASTM standard). Because of continued reports of deaths and other incidents associated with bunk beds, and because of indications there may not be adequate compliance with the voluntary ASTM standard, the CPSC published an advance notice of proposed rulemaking (''ANPR'') to begin a rulemaking proceeding that could result in performance or other standards to address the risk of entrapment associated with bunk beds. 63 FR 3280 (January 22, 1998). The Commission received 418 comments in response to the ANPR.

B. Incident Data

Deaths

From January 1990 through October 23, 1998, CPSC received reports of 89 bunk-bed-related deaths of children under age 15 (see Table 1 below).

TABLE 1—FATAL BUNK BED INCIDENTS REPORTED TO CPSC, BY YEAR AND HAZARD PATTERN

Year	Total	Hazard Pattern		
		En-trap.	Hang-ing	Falls
Total	89	57	24	8
1990	7	5	2	
1991	15	10	2	3
1992	4	3	1	
1993	19	10	7	2
1994	10	6	3	1
1995	12	5	5	2
1996	12	11	1	
1997	8	6	2	
1998	2	1	1	

Source: CPSC data files, January 1990—October 1998.

Of the 89 fatalities, 57 (64%) resulted from entrapment. An additional 24 children died when they inadvertently were hung from the bed by such items as belts, ropes, clothing, and bedding, and eight children died in falls from bunk beds.

As shown in Table 2, over 96% (55 of 57) of those who died in entrapment incidents were age 3 and younger, and all but one were younger than 5. In contrast, almost 80% (19 of 24) of those who died in hanging incidents were age 6 and older. Eight fall-related deaths occurred during this period and involved both pre-school and older victims.

Using statistical methodology, a national estimate of the total annual entrapment deaths was developed. About 10 bunk-bed-related entrapment deaths are estimated to have occurred in the United States each year since 1990.

TABLE 2.—FATAL BUNK BED INCIDENTS REPORTED TO CPSC, BY VICTIM AGE AND HAZARD PATTERN

[January 1990–October 1998]

Age (years)	Total	Hazard pattern		
		En-trap.	Hang-ing	Falls
Total	89	57	24	8
<1	18	16	1	1
1	20	19	1	
2	15	13	1	1
3	8	7		1
4	4	1	1	2
5	1		1	
6	3		3	
7	3	1	2	
8	2		2	

TABLE 2.—FATAL BUNK BED INCIDENTS REPORTED TO CPSC, BY VICTIM AGE AND HAZARD PATTERN—Continued

[January 1990–October 1998]

Age (years)	Total	Hazard pattern		
		En-trap.	Hang-ing	Falls
9	3		2	1
10+	12		10	2

Source: CPSC data files, January 1990–October 1998.

Injuries

From hospital emergency room data reported through the National Electronic Injury Surveillance System (NEISS), the Commission estimates that about 31,400 bunk-bed-related injuries to children under the age of 15 were treated in U.S. hospital emergency rooms during 1997. Almost one-half (43%) of the victims were younger than 5 years. A review of the descriptive comments received for each injury revealed that falls from the bed were involved in almost all cases in which the circumstances were reported. About two percent of the victims were hospitalized. Virtually none of the reported incidents involved entrapment or hanging, which generally results in either death or no injury. With either of these results, the victim is not likely to be taken to an emergency room.

Entrapment Incidents

Entrapment-related incidents, which accounted for the majority of deaths, were reviewed in further detail to provide additional information about the circumstances involved. Both fatal and ''near-miss'' incidents were included. The ''near-miss'' incidents, usually reported through consumer complaints, were those in which a child became entrapped in the bed, often requiring rescue by the parent or caregiver. In these cases, there were generally no injuries or injuries were minor (contusions/abrasions). However, ''near-miss'' incidents were examined because they were judged to have the potential for death or serious injury.

CPSC received reports of at least 13 additional entrapment incidents (3 fatal) since the January 8, 1998 Commission briefing. This results in a total of 116 incidents from January 1990 through October 23, 1998, of which 57 were fatalities and 59 were ''near-misses.'' Table 3 illustrates the location in the bunk bed of the entrapments.

TABLE 3—LOCATION IN BUNK BED OF FATAL AND "NEAR-MISS" ENTRAPMENT INCIDENTS

Location of entrapment	Type of incident		
	Total	Fatal	Near-miss
Total	116	57	59
Top Bunk	74	39	35
Guardrail	48	27	21
Bed/Wall	11	9	2
End Structure	12	1	11
Add-On Rail	1	1	
Other	1		1
Unk.	1	1	
Bottom Bunk	26	12	14
Guardrail	1		1
Bed/Wall	6	6	
End Structure	13	3	10
Add-On Rail	2	2	
Other	4	1	3
Ladder	5	2	3
Unknown Bunk	11	4	7
Guardrail	2		2
Bed/Wall	1	1	
End Structure	4		4
"Safety Rails"	1	1	
Other	1		1
Unk.	2	2	

Source: CPSC data files, January 1990—October 1998.

As shown in Table 3, 74 of the entrapment incidents involved the upper bunk, 26 involved the lower bunk, and 5 involved the ladder. In the incidents where the information was available, it appeared that all but three of the incidents involving fatal entrapment in the structure of bunk beds occurred on beds not meeting the entrapment requirements in the ASTM standard. Of the three incidents involving beds that appeared to conform to the entrapment requirements, two involved entrapment in the upper bunk. In these incidents, an 18-month-old infant and a child who was almost 5 years old slipped through the space between the end of the guardrail and the bed end structure and became wedged between the bed and a wall. In the third incident, a 22-month-old child became entrapped by the head in an opening between the underside of the upper bunk foundation support and a curved structural member in the bunk-bed end structure.

C. Conformance to Entrapment Requirements in ASTM Standard

The CPSC's Compliance staff continues to identify bunk beds that do not comply with the entrapment requirements in the ASTM standard. On every occasion in the past 4 years when the staff has focused on bunk bed conformance, it has located nonconforming beds.

Between November 1994 and September 1997, CPSC's staff worked with 41 manufacturers to recall bunk beds that did not conform to the entrapment requirements in the ASTM standard. The recalls were the result of intensive inspections of bunk bed retailers by the CPSC Field staff and involved over 531,000 bunk beds.

During February and April 1998, CPSC's Field staff visited 55 retail stores in 39 cities and examined 145 bunk bed models from 58 manufacturers. Of these, 23 firms had at least one model of bunk bed that did not conform to the ASTM standard, and 7 of those firms were repeat violators. The staff preliminarily determined that bunk beds made by 7 of the 23 firms presented a substantial product hazard. Two of these firms were out of business, and the other five firms were requested to recall/retrofit their nonconforming bunk beds. A CPSC News Release announcing this recall was issued on November 10, 1998. Sixteen of the 23 firms had nonconforming bunk beds that the staff believed would not present a substantial risk of entrapment. For example, the openings in the structure of the upper bunk bed were only slightly larger than the spacing requirements of the ASTM standard, and a child's torso would not be likely to slip into these openings. However, letters were sent to these firms notifying them of their nonconformance and asking them to correct future production.

Table 4, below, lists the number of beds produced by the five manufacturers whose beds were found to have serious violations of the entrapment requirements in the ASTM standard.

TABLE 4.—NUMBER OF BUNK BEDS SUBJECT TO RECALL

Mfr.	No. of models/ start date	Annual sales	Total sales since start date	Knowledge of ASTM standard
A*	5/1995	8,000	14,477	Yes.[1]
B*	2/1997	2,000	2,463	Yes.[2]

TABLE 4.—NUMBER OF BUNK BEDS SUBJECT TO RECALL—Continued

Mfr.	No. of models/ start date	Annual sales	Total sales since start date	Knowledge of ASTM standard
C	1/1994	150	600	Yes.[3]
D	1/1986	1,500	18,000	No.[4]
E	1/1997	514	1,028	No.[5]
Total		12,164	36,568	

*Repeat Violators
[1] Company recalled several bunk beds in 1995. President of company said he thought the beds conformed.
[2] Company is an importer of beds from Brazil and claimed to have knowledge of the ASTM standard but not with respect to the guardrail issue.
[3] Company was aware of the ASTM standard but claimed to have misinterpreted certain requirements.
[4] Company claimed to have no knowledge of the ASTM standard.
[5] During a 1998 inspection, the plant manager claimed to have no knowledge of the ASTM standard.

Table 4 shows that the 1998 limited retail inspections resulted in the recall of over 36,000 bunk beds. The total annual sales of beds produced by the 58 manufacturers whose beds were examined during the inspections is not known. The table also shows that three of the five manufacturers whose beds were found to have serious entrapment hazards were aware of the existence of the ASTM standard and that two had been previously notified by CPSC that their beds did not conform to the standard.

Since April 1998, the staff has identified 15 more bunk bed makers, and is investigating their products.

At the time the ANPR was issued, the Commission knew of 106 bunk bed manufacturers. As a result of the recent retail inspections of furniture retailers and a search of the Internet, CPSC is now aware of about 160 manufacturers and importers of bunk beds. It is evident from the history of the Commission's efforts to identify nonconforming bunk beds that there are many small firms that enter this market and do not conform to the ASTM standard, either because they are unaware of it or because they do not believe they need to conform because the standard is voluntary.

Based on this extensive experience, the Commission staff believes that it would be able to identify significant numbers of nonconforming beds each year into the foreseeable future. Therefore, the staff believes it is reasonable to conclude that the current degree of conformance with the voluntary standard would begin to fall if CPSC's extraordinary enforcement efforts in this area were cut back and a mandatory standard were not in place.

D. Statutory Authorities for This Proceeding

What Statute is Appropriate for Regulating Bunk Beds?

The Federal Hazardous Substances Act (''FHSA'') authorizes the regulation of unreasonable risks of injury associated with articles intended for use by children that present mechanical (or electrical or thermal) hazards. FHSA § 2(f)(D), 15 U.S.C. 1261(f)(D). The hazards associated with bunk beds that are described above are mechanical. *See* FHSA § 2(s), 15 U.S.C. 1261(s). The Consumer Product Safety Act (''CPSA'') authorizes the regulation of unreasonable risks of injury associated with ''consumer products,'' which include bunk beds—whether intended for the use of children or adults. CPSA § 3(a)(1), 15 U.S.C. § 2052(a)(1).

Thus, bunk beds intended for the use of adults can be regulated only under the CPSA, while bunk beds intended for the use of children potentially could be regulated under either the FHSA or the CPSA. Bunk beds probably would be considered as intended for use by children only if they have smaller than twin-size mattresses or incorporate styling or other features especially intended for use by children. The data available to the Commission's staff do not indicate whether the known deaths and injuries are occurring on beds intended for use by children. Nevertheless, any regulation for bunk beds should include beds intended for children, since there is no reason why such beds, to the extent they exist, do not present the same risks to children as do adults' bunk beds.

Section 30(d) of the CPSA, however, provides that a risk associated with a consumer product that can be reduced to a sufficient extent by action under the FHSA can be regulated under the CPSA only if the Commission, by rule, finds that it is in the public interest to do so. 15 U.S.C. 2079(d). Because the risks of bunk beds can be addressed with the two-pronged approach (*i.e.*, by both statutes), there appears to be no strong reason why it would be in the public interest to regulate bunk beds only under the CPSA. Accordingly, the requirements are proposed as two separate rules, one under the CPSA for ''adult'' bunk beds and the other under the FHSA for beds intended for use by children. The Commission seeks comment on whether there are categories of bunk bed use where the beds will always be used by adults, even after any sale by the original purchaser. If such uses can be identified, the Commission would consider whether bunk beds sold solely for such uses should be exempt from these rules.

What Effect Will the Existence of the Voluntary Standard Have on the Rulemaking?

The Commission may not issue a standard under either the CPSA or the FHSA if an industry has adopted and implemented a voluntary standard to address the risk, unless the Commission finds that ''(i) compliance with such voluntary . . . standard is not likely to result in the elimination or adequate reduction of such risk of injury; or (ii) it is unlikely that there will be substantial compliance with such voluntary . . . standard.'' See 9(f)(3)(D) of the CPSA, 15 U.S.C. 2058(f)(3)(D), and 3(i)2) of the FHSA, 15 U.S.C. 1262(i)(2). The percentage of currently produced bunk beds that conform to the ASTM standard could be as high as 90% or more. This raises the questions of whether the ASTM standard is substantively adequate and, if so, whether it will command ''substantial compliance.''

The proposed rule goes beyond the provisions of the ASTM voluntary standard. First, it eliminates the voluntary standard's option to have an opening of up to 15 inches at each end of the wall-side guardrail. Second, the voluntary standard protects against entrapment only within the 9-inch space immediately above the upper surface of the lower bunk's mattress. The mandatory standard extends this area of protection upward to the level of the underside of the upper bunk foundation. Both of these provisions, which are in the proposed rule but not

in the voluntary standard, address fatalities and, as noted below, have benefits that bear a reasonable relationship to their costs. Furthermore, the absence of any identification of the manufacturer on many beds has resulted in extremely low recall effectiveness rates. The proposed mandatory standard requires that the name and address of the manufacturer, distributor, or retailer be on the beds.

Therefore, the Commission preliminarily finds that compliance with the voluntary standard would not be likely to result in the elimination or adequate reduction of the risk of entrapment injury or death. For this reason, the voluntary standard would not bar the proposed rule. If the ASTM standard were substantively adequate, the Commission would be required to make a finding on substantial compliance.

Neither the CPSA nor the FHSA define ''substantial compliance.'' In dealing with this issue as it applies to bunk beds, the Office of General Counsel reviewed the Commission's past actions and statements dealing with the meaning of ''substantial compliance,'' and reviewed the appropriate legislative history. The Office of General Counsel has proffered the opinion that substantial compliance does not exist where there is a reasonable basis for concluding that a mandatory rule would achieve a higher degree of compliance. The Office of General Counsel maintains that two key, although not necessarily exclusive, considerations in making this determination are (1) whether, as complied with, the voluntary standard would achieve virtually the same degree of injury reduction that a mandatory standard would achieve and (2) that the injury reduction will be achieved in a timely manner.

For the reasons explained in Section E of this notice, the Commission staff believes that a mandatory standard will be more effective in reducing entrapment deaths from bunk beds than will the voluntary standard. Therefore, the staff believes there is not substantial compliance with the voluntary standard, which consequently does not bar issuing the proposed rule.

The Office of General Counsel further states that this finding here does not mean that the Commission would conclude that a mandatory standard will always be more effective than a voluntary standard. Each case must be considered on its own facts. Moreover, even if there is insufficient compliance with a voluntary standard, neither the CPSA nor the FHSA would compel the Commission to regulate.

The Commission takes no position on this interpretation of substantial compliance at this time. The Commission encourages all persons who would be affected by such an interpretation to submit comments for the record.

The Office of Compliance has also enumerated certain other factors which it feels impact the level of conformance with the voluntary standard. These are addressed in Section E below. The Commission reserves judgment on the propriety of considering these factors in measuring substantial compliance and seeks public comments on them. Also note the draft findings with regard to substantial compliance in the text of the proposed rules themselves, which the Commission includes in order to elicit the most effective public comment.

E. The Potential Need for a Mandatory Standard

In deciding to propose this rule, the Commission considered carefully the particular characteristics of the bunk bed industry. This industry is highly diverse and fragmented, with differing levels of sophistication relating to product safety. Firms can easily enter and leave the bunk bed manufacturing business. The Commission has identified about 160 manufacturers of bunk beds—a 50% increase since the Commission considered the ANPR. The Office of Compliance maintains that this fragmentation and diversity contributes to difficulties in achieving more complete compliance with the voluntary standard. Because it is difficult to identify all firms in the industry, Compliance indicates it is difficult for voluntary standards organizations and trade associations to conduct outreach and education efforts regarding the voluntary standard. By contrast, in industries with a small number of firms, it is easier to find the firms and educate them about the existence and importance of voluntary standards. Mandatory standards—codified in the accessible Code of Federal Regulations—are easier to locate, and their significance is more obvious.

These generalizations about the industry found support in the staff's enforcement experience. Some manufacturers contacted by Compliance did not see an urgency to comply with a ''voluntary'' standard, and they did not recognize the hazards associated with noncompliance. Other manufacturers were not even aware of the standard. As a result, entrapment hazards will continue to exist on beds in use and for sale.

Compliance maintains that a mandatory standard would also reduce the staff's workload in ensuring that children are not exposed to bunk beds presenting entrapment hazards. In the past several years, the staff has expended significant resources to obtain the current level of conformance to the ASTM standard. If the Commission issues a mandatory standard, Compliance expects that fewer resources would be required to enforce the standard than are currently being used to identify defective bunk beds.

For the foregoing reasons, Compliance believes that a mandatory bunk bed entrapment standard may be needed and could bring the following benefits:

1. A mandatory standard could increase the awareness and sense of urgency of manufacturers in this industry regarding compliance with the entrapment provisions, thereby increasing the degree of conformance to those provisions.

2. A mandatory standard would allow the Commission to seek penalties for violations. Publicizing fines for noncompliance with a mandatory standard would deter other manufacturers from making noncomplying beds.

3. A mandatory standard would allow state and local officials to assist CPSC staff in identifying noncomplying bunk beds and take action to prevent the sale of these beds.

4. Under a mandatory standard, retailers and distributors would violate the law if they sold noncomplying bunk beds. Retailers and retail associations would then insist that manufacturers and importers provide complying bunk beds.

5. The bunk bed industry is extremely competitive. Manufacturers who now conform to the ASTM standard have expressed concern about those firms that do not. Nonconforming beds can undercut the cost of conforming beds. A mandatory standard would take away any competitive cost advantage for unsafe beds.

6. A mandatory standard would help prevent noncomplying beds made by foreign manufacturers from entering the United States. CPSC could use the resources of the U.S. Customs Service to assist in stopping hazardous beds at the docks.

7. The absence of manufacturer identification on many beds has resulted in extremely low recall effectiveness rates. The proposed standard would require companies to include their identity on the beds.

8. Although the Commission currently believes that the ASTM voluntary standard for bunk beds adequately addresses the most common entrapment hazards associated with these products,

the Commission is aware of three entrapment fatalities that occurred in conforming beds. A mandatory standard could modify the provisions in the voluntary standard so as to address the entrapment deaths that can occur on beds that comply with the voluntary standard.

Therefore, the Commission decided to issue an NPR to seek public comment on the proposed rule.

However, the available information does not support a conclusion that changes to currently produced bunk beds would significantly reduce the number of fatalities due to falls and hangings. Thus, the Commission is not proposing performance requirements to address falls or hangings from bunk beds at this time.

F. Rulemaking Procedure

The Commission intends to issue the requirements they would apply to bunk beds not intended for use by children as a consumer product safety standard under the CPSA. This requires a finding that the requirements are reasonably necessary to eliminate or adequately reduce an unreasonable risk of injury presented by bunk beds. This and other required findings are discussed in the proposed rule.

Bunk beds intended for the use of children will be regulated by a determination under FHSA Section 3(a)(1) that bunk beds that do not comply with the proposed rule present mechanical hazards, as provided in FHSA Section 3(a)(1), and are thus hazardous substances. See FHSA Sections 2(f)(1)(D) and 2(s). Under the FHSA, a product that is a hazardous substance and intended for use by children is banned. FHSA Section 2(q)(1). Other required finding are discussed in the proposed FHSA rule.

Before adopting a CPSA standard or FHSA rule, the Commission first must issue an ANPR as provided in section 3(f) of the FHSA or section 9(a) of the CPSA. 15 U.S.C. 1262(f), 2058(a). For bunk beds, the Commission issued an ANPR on January 22, 1998. 63 FR 3280. If the Commission continues with a proposed rule, the Commission must publish the text of the proposed rule, along with a preliminary regulatory analysis, in accordance with section 3(h) of the FHSA or section 9(c) of the CPSA. 15 U.S.C. 1262(h), 2058(c). If the Commission then issues a final rule, it must publish the text of the final rule and a final regulatory analysis that includes the elements stated in 3(i)(1) of the FHSA or section 9(f)(2) of the CPSA. 15 U.S.C. 1262(i)(1), 2058(f)(2). Before issuing a final regulation, the Commission must make certain statutory findings concerning voluntary standards, the relationship of the costs and benefits of the rule, and the burden imposed by the regulation. FHSA § 3(i)(2), 15 U.S.C. 1262(i)(2); CPSC § 9(f)(3), 15 U.S.C. 2058(f)(3).

G. Response to Comments on the ANPR

The Commission received 418 comments in response to the ANPR for bunk beds. Of these, 396 commenters favored a mandatory rule, 19 opposed such a rule, and three expressed no opinion on whether they favored a mandatory rule.

Of the 396 commenters who favored a mandatory rule, 355 submitted a form letter stating:

> If one child dies due to unsafe bunk bed design and manufacture this questions whether voluntary standards in the industry are sufficient to protect our children. Due to the fact that there were more than 45 fatalities and over 100,000 injuries from 1990 to 1995, I feel that is overwhelming evidence that mandatory standards *must* be passed to insure that this tragedy does not strike another American family.

Forty-four comments were received from students at the University of Tennessee School of Law. Twenty-eight of the students favored a mandatory rule, 15 opposed such a rule, and one expressed no opinion on this issue.

1. Issue: Guardrails. Thirteen commenters suggested eliminating the allowable 15-inch openings in the guardrail on the wall side of an upper bunk, to address the two entrapment deaths that occurred on conforming beds. In those instances, a child age 18 months and another almost 5 years old slipped through openings at the end of the guardrail and became entrapped between the bed and a wall. Six comments from proponents of a mandatory rule suggested that it should address falls from the upper bunk with more stringent requirements than are in the current ASTM standard. Although most commenters expressing this view did not suggest specific provisions to address falls, some felt that eliminating the 15-inch openings between the ends of the upper bunk guardrails and the bed end structures that are permitted by the current ASTM standard may reduce the likelihood of falls.

Response. CPSC agrees with the 13 commenters who suggested eliminating the 15-inch-wide openings between ends of guardrails and bed end structures on the *wall* side of the upper bunk to minimize the likelihood of entrapment between the upper bunk of the bed and a wall. Accordingly, the proposed rule requires a side guardrail on one side of the upper bunk to extend continuously between the end structures.

In most cases, incident data do not reveal the precise cause of falls from the upper bunk. Some reports stated that the fall was associated with the use of the bunk's ladder but did not state whether the ladder could be accessed through an opening in the guardrail or whether it could only be reached by climbing over a continuous guardrail or over the end structure of the upper bunk. It is possible that having to climb over the guardrail or end structure to get on or off the ladder could increase the incidence of falls. Since the CPSC cannot determine whether continuous guardrails on both sides of the upper bunk would significantly affect the likelihood of a fall, such a requirement is not included in the proposed rule.

2. Issue: Lower bunk end structures. Seven commenters suggested that a mandatory rule should include the lower bunk entrapment criteria that are in the ASTM standard but should apply them to the entire end structure below the level of the upper bunk mattress support system. Such a requirement would address a fatal incident that occurred on a bed conforming to the current ASTM standard. That incident involved a 22-month-old child who was entrapped by the head in an opening between the underside of the upper bunk foundation support and a curved structural member in the bed end structure. The current ASTM standard has lower-bunk entrapment requirements that apply only to the portion of the end structure that is between the level of the lower bunk mattress support system and a level that is 9 inches above the sleeping surface of the lower bunk (when it is equipped with a mattress having the maximum thickness recommended by the manufacturer).

Response: The Commission agrees with these commenters, and the proposed rule contains a requirement addressing entrapment in lower bunk bed end structures that is similar to that in the ASTM standard but applies to the entire portion of the bed's end structures that extends between the upper side of the foundation of the lower bunk and the underside of the foundation of the upper bunk. While this may require a change in the design of the end structures of some bunk beds, the Commission believes that the cost would be small.

3. Issue: Young children and public awareness: Sixteen commenters noted that a majority of the entrapment deaths involved very young children, who should not be placed on an upper bunk. These commenters were about equally

divided between proponents and opponents of a mandatory rule. Voicing concern that the parents of the victims were probably unaware of the hazard of placing these young children on the upper bunk, they suggested that the Commission could join with the American Furniture Manufacturers Association (AFMA) in mounting a public awareness campaign. AFMA represents manufacturers of bunk beds.

Response: The first bunk bed safety guideline became effective in 1979 and required a label which, among other warnings, stated ''Prohibit children under 6 years on upper bunk.'' The current (1996) ASTM standard also bears a similar statement. For almost 20 years, bunk beds conforming to the applicable safety guideline or voluntary standard have warned against placing children under 6 years old on the upper bunk, yet consumers continue this practice. The proposed rule also contains a requirement for a warning label. However, the Commission believes that the most effective way to address entrapment is to design the bed so that it does not present this hazard to children under 6 years of age because some parents would continue to place their young children on the upper bunk.

4. Issue: Retailer tests. A furniture retailer submitted comments opposing a mandatory rule on the grounds that:

- The number of injuries associated with bunk bed entrapment are minimal [, and,]
- For [its own] protection, a retailer would be required to engage in [its] own testing, thereby dramatically increasing the price [of a bunk bed] to the customer.

Response: While entrapment generally does not result in an injury requiring medical attention, it is the leading cause of death associated with bunk beds, and the proposed rule is primarily intended to address entrapment fatalities. The Commission does not agree that a mandatory rule would force retailers to incur the cost of having bunk beds tested. If retailers are concerned that manufacturers may claim conformance when in fact their products do not conform, the tests in the proposed rule are simple enough that retailers easily could check for conformance themselves.

5. Issue: Installation and bedding choice. The same furniture retailer argues that a mandatory standard ignores major contributing factors to bunk bed accidents, i.e., consumer installation and consumer bedding choice.

Response: CPSC is not aware of any incidents resulting from improper consumer assembly or from an incorrect choice of bedding.

6. Issue: Degree of voluntary conformance. A trade association and the organization ''Consumer Alert'' question the legality of a rulemaking proceeding in light of the Commission's estimate of the current conformance to the ASTM standard.

Response: See Section D of this notice.

7. Third-party certification as an alternative. An independent testing laboratory that currently operates a third-party certification program stated that they believe that such a certification program indicating conformance to the ASTM standard would be more productive than a mandatory rule. The laboratory suggested that CPSC could recognize the certification program and encourage manufacturers to join it as CPSC presently does for seven juvenile products' certification programs.

Response. The Commission does not believe that recognition of a third-party certification program would have a significant effect on the degree of conformance to the ASTM standard, because the firms that have been found to be in violation of the entrapment provision in the standard are small and are not likely to participate.

H. Preliminary Regulatory Analysis

Introduction

The CPSA and FHSA require the Commission to publish a preliminary regulatory analysis of the proposed rule and reasonable alternatives. This includes a discussion of the likely benefits and costs of the proposed rule and its reasonable alternatives. The Commission's preliminary regulatory analysis is set forth below.

Product and Market Information

Bunk beds are essentially stackable twin beds, with wood or metal frames. Some models now incorporate a lower double bed with a twin upper. The Commission notes that the definition of bunk bed in the proposed rule is based on the definition in the ASTM standard. That definition states that a bunk bed is a bed in which the underside of the foundation is over 30 inches from the floor. This does not require that there be a second stackable mattress and foundation. The Commission requests comments on whether the rule should be limited to beds with more than one foundation.

The retail prices of these products range from $100 to $700; manufacturers estimate the average retail price of a bunk bed at $300. According to AFMA, which represents manufacturers of bunk beds, forty firms, which are either AFMA members or members of the existing ASTM bunk bed subcommittee, account for about 75–80% of total annual sales of bunk beds. At the time the ANPR was issued, the Commission knew of 106 manufacturers of bunk beds, including the 40 AFMA or ASTM members. Staff is now aware of about 160 firms manufacturing bunk beds. The share of the market accounted for by the other non-AFMA/ASTM firms is not known, but is believed to account for a large portion of the remaining 20–25% of the market. Additionally, there are likely other firms unknown to CPSC that are producing bunk beds.

Industry sources estimate that about 500,000 bunk beds are sold annually, and that the expected useful life of bunk beds is 13 to 17 years. Based on the CPSC's Product Population Model (a computer model which estimates how many of a particular product are in use at a given time), there may be some 7–9 million bunk beds available for use; this includes beds to which children are not exposed and beds which are not stacked.

Historically, imports have accounted for only a small part of the U.S. market for bunk beds. This is due in large part to the shipping cost relative to price. Since bunk beds can be shipped unassembled and mated to U.S.-made mattresses, there is a small number of imported bunk beds sold in the United States. AFMA spokesmen report that there are no data on the extent of such imports. However, AFMA indicated that imports of bunk beds by its members appear to be increasing.

Conformance With the Existing Voluntary Standard

The Commission's Compliance staff has reported that all 40 firms that either are members of AFMA or have ASTM standing produce bunk beds that are in conformance with the existing voluntary standard. The staff has examined the products of and/or contacted the remaining firms known to be producing bunk beds. Subsequently, the staff worked with the manufacturers of beds that did not comply with the voluntary standard to implement a number of corrective actions, including recalls. Since then, all of the beds produced by these firms have been in conformance.

The extent of conformance to the voluntary bunk-bed standard since 1979 (the initial year industry guidelines were available) is not known with precision. However, based on its knowledge of industry practices, CPSC's Engineering Sciences staff estimates that roughly 50% of production from 1979 to

1986 conformed to the voluntary standard's upper-bunk entrapment requirements. This rough estimate is based in part on the fact that, although the guidelines were available during this period, even some firms represented on the ASTM standards committee did not follow them.

The industry publicized the availability of guidelines in 1986, and CPSC staff became more heavily involved in the standards process. The CPSC believes that the publication of these guidelines and CPSC staff involvement raised industry awareness of the existence and importance of the voluntary standard. Accordingly, conformance may have increased to perhaps 75% of production from 1986 to 1992. In 1992, ASTM published its bunk bed standard, and CPSC began to monitor products for conformance to that standard. Therefore, for purposes of the cost/benefit analysis, we assume that 90% of production since 1992 may conform to the ASTM standard.

Many of the bunk beds produced in the early to mid-1980's, which may not have been in conformance to the standard, have reached the end of their average expected useful lives and are probably no longer in use. Therefore, although the Commission cannot precisely estimate what proportion of bunk beds in current use conforms to the voluntary standard, the percentage likely falls between 50 and 90%. Assuming a ''conforming'' range between these extremes, on the order of from 70 to 85%, some 15 to 30% of bunk beds in use since the early 1990's do not conform to the ASTM voluntary standard for upper bunk entrapment.

Potential Costs of Proposed Rule

(1) Introduction

The costs associated with the proposed rule would include the cost of compliance for any firms not now conforming to the voluntary standard, and the cost of any Commission-added requirements in the final mandatory rule.

(2) Costs of Mandating ASTM's Requirements

In order to provide some preliminary information regarding these costs, CPSC Economics staff contacted four manufacturers that had modified their production to conform to the standard. Two of these manufacturers stated that the cost of additional materials needed to provide ASTM entrapment protection was nominal compared to the overall materials costs, and that redesign costs would not be significant on a per-unit basis. They estimated that the addition of a second guardrail to the upper bunk added $15–20 to the retail price of a bed. The two other manufacturers, marketing bunk beds in the ''mid to upper'' price range, estimated that the addition of the second guardrail resulted in a $30–40 per bed increase in the retail price. Thus, the overall retail price increase range is estimated to be from $15 to $40 per bed. Only those firms that do not conform to the voluntary standard would be affected.

Potential Benefits of Mandating ASTM's Requirements

The proposed rule is intended to address the risk of entrapment deaths of children from bunk beds. The potential benefits would be the decrease in these entrapment deaths. Avoidance of other incidents (such as near-entrapments) do not contribute significantly to the monetized benefits, because they generally produce no or only minor injuries. All of the known deaths involved children age 7 or younger.

The expected societal costs of bunk bed entrapment deaths represent the potential benefits of preventing them. There were 39 entrapment deaths associated with the upper bunk that were reported to the CPSC from January 1990 through mid-October 1998. Based on a review of the circumstances of the reports by the CPSC's Engineering and Epidemiology staff, the Commission concludes that the voluntary standard would have addressed at least 37 of the 39 upper-bunk entrapment deaths. Additionally, the standard would have addressed two of the three lower-bunk entrapment deaths that occurred in the bed end structures. Nationally, CPSC staff projected that about 10 (95% confidence interval, 6.0 to 14.4) bunk bed entrapment fatalities occurred annually since 1990. Altogether, the Commission believes that the voluntary standard would have addressed 68% of the reported fatalities due to entrapment in all locations (39 ÷ 57). Therefore, the voluntary standard could have addressed an estimated 7 deaths (10 × .68) per year.

In order to determine the expected benefits of the proposed rule, it is necessary to know the risk of death through bunk bed entrapment, defined as ''deaths per nonconforming bunk bed,'' and the expected reduction in risk. The risk level computation requires information on the number of bunk beds that were in use over the period of reported fatalities. The risk reduction factor depends on the effectiveness level of the standard.

The midpoint of the estimated number of bunk beds in use is 8 million units. If 15–30% of bunk beds that were in use did not conform to the standard, as estimated above, then fatalities may be assumed to have been spread over an estimated 1.2 to 2.4 million nonconforming beds (0.15 to 0.30,×8 million). Therefore, the risk of a fatal entrapment that the voluntary standard's provisions could address is from 2.9 to 5.8 deaths per million nonconforming beds (7÷2.4 to 7÷1.2). At an assumed societal cost of $5 million per death, the annual societal value of averting all such fatalities is from about $15 to $30 per bed per year (3 deaths per million nonconforming beds×$5 million, at the lower end of the range, to 6 deaths per million beds×$5 million, at the upper end).

If we assume a useful life of 15 years for a bunk bed and a discount rate of 3%, the estimated present value of averting the entrapment fatalities addressed by the voluntary standard ranges from about $175 to $350 per bed. This is the total potential benefit of averting the risk of death from a nonconforming bed over its useful life.

Comparison of Costs and Benefits of Compliance With ASTM's Requirements

The expected net benefits of a mandatory standard containing only the entrapment provisions of the ASTM standard depend upon the costs of the standard for each otherwise noncomplying bed ($15 to $40), the societal costs of the deaths addressed by the standard for each noncomplying bed ($175 to $350), and the effectiveness of the standard in reducing deaths. If the standard were fully effective (i.e., if it prevents all of the deaths addressed), the benefits would be much higher than the costs of implementing the standard. In fact, the net benefits per otherwise noncomplying bed, over its expected product life, would range from a low of $135 ($175–$40) to a high of $335 ($350–$15). Thus, the benefits of these provisions are about 4–23 times their costs. CPSC's Engineering staff has concluded that all of the entrapment incidents addressed by the requirements of the proposed standard would have been averted had those beds been in conformance. Thus, a mandatory standard is expected to be highly effective.

The number of nonconforming bunk beds produced annually is not known with precision. Industry sources estimated that there may be as many as 50,000 nonconforming units produced each year. If this estimate is used, the net benefits to society of the proposed rule (if fully effective and all non-conforming beds were made to comply) would be about $6.75 to $16.75 million per year (50,000×$135 to 50,000×$335).

If the standard were less than 100% effective, or if all nonconforming beds were not made to comply, the aggregate expected benefits would be proportionately less.

Costs and Benefits of Additional Requirements

As discussed below, the Commission is also aware of entrapment deaths on the upper bunk and lower bunk, in scenarios not addressed by the voluntary standard. To address these deaths, the proposed mandatory standard includes requirements for a continuous guardrail for the entire wall side of the upper bunk, and modifications of the lower bunk structure. CPSC staff concluded that these modifications would have averted these remaining entrapment deaths.

(a) Continuous guardrail. The Commission is proposing a requirement for a continuous guardrail along the entire wall side of the bed; the current voluntary standard allows a 15-inch gap at either end of the wall side guardrail. The continuous guardrail would address two entrapment deaths that occurred between the bed and the wall in the area of a gap in the guardrail during the 105-month study period of January 1990 through mid-October 1998. This should prevent about 0.23 deaths per year (2÷8.75 years).

Trade sources indicated that perhaps 50–75% of all bunk beds in use during the January 1990-May 1998 period contained this gap; if this percentage range is used, then some 4–6 million beds with the gap would have been in use for each of the years in the study period. Consequently, over that period of time, there were from 0.04 deaths per million nonconforming beds per year (0.23÷6) to 0.06 deaths per million nonconforming beds per year (0.23÷4). Assuming a cost of $5 million per death, the staff estimated the present value of eliminating these gaps at $2.40 to $3.50 over the life of each bed that otherwise would have had a gap in the wall-side guardrail.

The precise cost of eliminating the allowance of a 15-inch gap in the guardrail for the wall side of the upper bunk is unknown. However, the Commission estimates that the cost of materials to extend one guardrail an additional 30 inches (for those bunk beds which incorporated up to a 15-inch gap on both ends of the wall-side guardrail) would be less than the estimated benefits ($2.40 to $3.50 per noncomplying bed).

(b) Lower bunk end structures. The Commission is aware of one death over the past 8 years involving entrapment in the end structures of the lower bunk, occurring in a scenario not currently addressed by the voluntary standard. Addressing this death would result in costs associated with redesigning the bed so that the end structures will not allow the free passage of a wedge block (approximating the size of a child's body) unless it also allows the free passage of a 9-inch sphere (approximating the child's head). The precise potential cost of reconfiguring the bunk end structures is unknown, since the Commission does not know how many models would require such rework. Based on some known noncomplying beds, however, the Commission believes that, for some bunk beds, materials costs may decrease since less material may be required to comply with these requirements than are currently being used. Thus, the Commission expects the costs of this requirement to be design-related. Costs to redesign the end structures, where necessary, will be modest and, in any event, can be amortized over the total subsequent production of the beds. If these one-time design costs are amortized over the entire production run for these bunks, the estimated costs are likely to be small. Therefore, the major portion of the costs imposed by the rule will fall only on those firms that do not currently comply with the voluntary standard.

(c) Effect on market. The small additional costs from any required wall guardrail and end structure modifications are not expected to affect the market for bunk beds, either alone or added to the costs of compliance to ASTM's provision.

Alternatives. The Commission considered two alternatives to the proposed rule.

(a) Defer to the voluntary standard. One alternative to a mandatory rule would be to decide that a mandatory regulation is not necessary, because the current standard addresses about 70% of reported entrapment hazards over the past 8 years. If there is no mandatory action, then no costs would be imposed and no deaths would be averted involving future nonconforming bunk beds.

A variation on this alternative was raised by a commenter, who suggested that bunk beds which conform to the voluntary standard should be so labeled. Consumers could then compare conforming and nonconforming beds at the point of purchase and make their purchase decisions with this safety information in mind. This, however, would not necessarily reduce injuries, because consumers likely do not know there is a voluntary standard and thus would not see any risk in purchasing a bed that was not labeled as conforming to the standard.

(b) Third-party certification. The Commission could have decided to defer to the voluntary standard and, in addition, to encourage third-party testing to the ASTM standard.

This alternative also would not likely prevent the deaths from entrapment that could be prevented by a mandatory rule. Firms that are too small and regional to appreciate the importance of complying with the voluntary standard are unlikely to volunteer to obtain third-party certification that their products comply with that standard. In addition, the costs of third-party certification would deter many small firms from using this alternative. Furthermore, small firms especially might be reluctant to pay for third-party certification when compliance with the entrapment provisions of the voluntary standard can easily be determined by the manufacturer.

I. Regulatory Flexibility Act

The Commission is required by the Regulatory Flexibility Act of 1980 (''RFA'') to address and give particular attention to the economic effects of the proposed rule on small businesses.

The precise number of firms manufacturing bunk beds is not now known. The Commission staff has identified about 160 firms that have produced bunk beds: these were identified through the trade association, national and regional trade shows, industry contacts, the Internet, and retail inspections. Small Business Administration (''SBA'') guidelines classify firms in the furniture production industry as small if they have less than 500 employees, are independently owned, and are not dominant in the field. Most of these firms would be classified as small businesses under SBA's criteria. It is likely that there are additional firms which produce relatively small numbers of bunk beds annually. These remaining producers are also likely to be small businesses.

Even though there is a substantial number of small firms, the Commission does not expect that there will be a significant effect on these firms. As noted earlier, all of the 160 firms identified by the Commission already conform to the existing voluntary standard (some only after CPSC recall activity). Moreover, it is unlikely that the effects on any firms that have not been identified and that do not currently conform would be significant. For firms not conforming, the requirements are expected to increase

retail prices by about 5 to 15%, which likely would be passed on to consumers.

The mandatory standard would not require third-party testing. It is anticipated that the firms would self-certify that their products were in compliance with the mandatory standard. There would be no reporting or recordkeeping requirements under the proposed standard. The Commission is unaware of any Federal rules that would duplicate, or overlap or conflict with, the proposed rule.

J. Preliminary Environmental Assessment

The proposed rule is not expected to have a significant effect on the materials used in the production and packaging of bunk beds, or in the number of units discarded after the rule becomes effective. Therefore, no significant environmental effects would result from the proposed mandatory rule for bunk beds.

K. Executive Orders

This proposed rule has been evaluated in accordance with Executive Order No. 13,083, and the rule raises no substantial federalism concerns.

Executive Order No. 12,988 requires agencies to state the preemptive effect, if any, to be given the regulation. The preemptive effects of these rules is established by Section 26 of the CPSA, 15 U.S.C. 2075, and Section 18 of the FHSA. Section 26(a) of the CPSA states:

> (a) Whenever a consumer product safety standard under [the CPSA] applies to a risk of injury associated with a consumer product, no State or political subdivision of a State shall have any authority either to establish or continue in effect any provision of a safety standard or regulation which prescribed any requirements as to the performance, composition, contents, design, finish, construction, packaging, or labeling of such products which are designed to deal with the same risk of injury associated with such consumer product, unless such requirements are identical to the requirements of the Federal standard.

Subsection (b) of 15 U.S.C. 2075 provides a circumstance under which subsection (a) does not prevent the Federal Government or the government of any State or political subdivision of a State from establishing or continuing in effect a safety standard applicable to a consumer product for its own [governmental] use, and which is not identical to the consumer product safety standard applicable to the product under the CPSA. This occurs if the Federal, State, or political subdivision requirement provides a higher degree of protection from such risk of injury than the consumer product safety standard.

Subsection (c) of 15 U.S.C. 2075 authorizes a State or a political subdivision of a State to request an exemption from the preemptive effect of a consumer product safety standard. The Commission may grant such a request, by rule, where the State or political subdivision standard or regulation (1) provides a significantly higher degree of protection from such risk of injury than does the consumer product safety standard and (2) does not unduly burden interstate commerce.

Similar preemption provisions are in the FHSA. See FHSA Section 18(b), 15 U.S.C. 1261 note.

L. Extension of Time To Issue Final Rule Under the CPSA

Section 9(d)(1) of the CPSA, 15 U.S.C. 2058(d)(1), provides that a final consumer product safety rule must be published within 60 days of publication of the proposed rule unless the Commission extends the 60-day period for good cause and publishes its reasons for the extension in the **Federal Register**.

Executive Order No. 12,662, which implements the United States-Canada Free-Trade Implementation Act, provides that publication of standards-related measures shall ordinarily be at least 75 days before the comment due date. Accordingly, the Commission provided a comment period of 75 days for this proposal.

After the comment period ends, the CPSC's staff will need to prepare draft responses to the comments, along with a draft regulatory analysis and either a draft regulatory flexibility analysis or a draft finding of no substantial impact on a significant number of small entities. Then the staff will prepare a briefing package for the Commission. The Commission is likely to then be briefed, and will later vote on whether to issue a final rule. The Commission expects that this additional work will take about 12 months. Accordingly, the Commission extends the time by which it must either issue a final CPSA rule or withdraw the NPR until March 3, 2000. If necessary, this date may be further extended.

List of Subjects in 16 CFR Parts 1213, 1500 and 1513.

Consumer protection, Infants and children.

Effective Date

The Commission proposes that the rule become effective 180 days after publication of the final rule. This period will allow manufacturers to make any changes in their production needed to comply with the standard without unduly delaying the safety benefits expected from the rule.

For the reasons set out in the preamble, the Commission proposes to amend Title 16, Chapter II, Subchapters B and C, of the Code of Federal Regulations as set forth below.

1. A new Part 1213 is added to Subchapter B, to read as follows:

PART 1213—SAFETY STANDARD FOR ENTRAPMENT HAZARDS IN BUNK BEDS

Sec.
1213.1 Scope, application, and effective date.
1213.2 Definitions.
1213.3 Requirements.
1213.4 Test methods.
1213.5 Marking and labeling.
1213.6 Instructions.
1213.7 Findings.

Figure 1 to Part 1213—Wedge Block for Tests

Authority: 15 U.S.C. 2056, 2058.

§ 1213.1 Scope, application, and effective date.

This part 1213, a consumer product safety standard, prescribes requirements for bunk beds to reduce or eliminate the risk that children will die or be injured from being trapped between the upper bunk and the wall, in openings below guardrails, or in other structures in the bed. The standard in this part applies to all bunk beds sold for residential use that are manufactured in the United States, or imported, after [the effective date of the final rule]. Bunk beds intended for use by children are subject to the requirements in 16 CFR 1500.18(a)(18) and 16 CFR part 1513, and not to this part 1213. However, those regulations are substantively identical to the requirements in this part 1213.

§ 1213.2 Definitions.

As used in this part 1213:

(a) *Bed.* See Bunk bed.

(b) *Bed end structure* means an upright unit at the head and foot of the bed to which the side rails attach.

(c) *Bunk bed* means a bed in which the underside of any foundation is over 30 inches (760 mm) from the floor.

(d) *Foundation* means the base or support on which a mattress rests.

(e) *Guardrail* means a rail or guard on a side of the upper bunk to prevent a sleeping occupant from falling or rolling out.

§ 1213.3 Requirements.

(a) *Guardrails.* (1) Any bunk bed shall provide at least two guardrails, at least one on each side of the bed.

(2) One guardrail shall be continuous between each of the bed's end

structures. The other guardrail may terminate before reaching the bed's end structures, providing there is no more than 15 inches (380 mm) between either end of the guardrail and the nearest bed end structures.

(3) For bunk beds designed to have a ladder attached to one side of the bed, the continuous guardrail shall be on the other side of the bed.

(4) Guardrails shall be attached so that they cannot be removed without either intentionally releasing a fastening device or applying forces sequentially in different directions.

(5) The upper edge of the guardrails shall be no less than 5 inches (130 mm) above the top surface of the mattress when a mattress of the maximum thickness specified by the bed manufacturer's instructions is on the bed.

(6) With no mattress on the bed, there shall be no openings in the structure between the lower edge of the uppermost member of the guardrail and the underside of the upper bunk's foundation that would permit passage of the wedge block shown in Fig. 1 when tested in accordance with the procedure at § 1213.4(a).

(b) *Bed end structures.* (1) The upper edge of the upper bunk end structures shall be at least 5 inches (130 mm) above the top surface of the mattress for at least 50 percent of the distance between the two posts at the head and foot of the upper bunk when a mattress and foundation of the maximum thickness specified by the manufacturer's instructions is on the bed.

(2) With no mattress on the bed, there shall be no openings in the end structures above the foundation of the upper bunk that will permit the free passage of the wedge block shown in Fig. 1 when tested in accordance with the procedure at § 1213.4(b).

(3) When tested in accordance with § 1213.4(c), there shall be no openings in the end structures between the underside of the foundation of the upper bunk and upper side of the foundation of the lower bunk that will permit the free passage of the wedge block shown in Fig. 1, unless the openings are also large enough to permit the free passage of a 9-inch (230-mm) diameter rigid sphere.

§ 1213.4 Test methods.

(a) *Guardrails* (see § 1213.3(a)(6)). With no mattress on the bed, place the wedge block shown in Fig. 1, tapered side first, into each opening in the bed structure below the lower edge of the uppermost member of the guardrail and above the underside of the upper bunk's foundation. Orient the block so that it is most likely to pass through the opening (e.g., the major axis of the block parallel to the major axis of the opening) (''most adverse orientation''). Then gradually apply a 33-lbf (147-N) force in a direction perpendicular to the plane of the large end of the block. Sustain the force for 1 minute.

(b) *Upper bunk end structure* (see § 1213.3(b)(2)). Without a mattress or foundation on the upper bunk, place the wedge block shown in Fig. 1 into each opening, tapered side first, and in the most adverse orientation. Determine if the wedge block can pass freely through the opening.

(c) *Lower bunk end structure* (see § 1213.3(b)(3)). (1) Without a mattress or foundation on the lower bunk, place the wedge block shown in Fig. 1, tapered side first, into each opening in the lower bunk end structure in the most adverse orientation. Determine whether the wedge block can pass freely through the opening. If the wedge block passes freely through the opening, determine whether a 9-inch (230-mm) diameter rigid sphere can pass freely through the opening.

(2) With the manufacturer's recommended maximum thickness mattress and foundation in place, repeat the test in paragraph (c)(1) of this section.

§ 1213.5 Marking and labeling.

(a) There shall be a permanent label or marking on each bed stating the name and address (city, state, and zip code) of the manufacturer, distributor, or retailer; the model number; and the month and year of manufacture.

(b) The following warning label shall be permanently attached to the inside of an upper bunk bed end structure in a location that cannot be covered by the bedding but that may be covered by the placement of a pillow.

BILLING CODE 6355–01–P

⚠ WARNING

To help prevent serious or fatal injuries from entrapment or falls:

- Never allow a child under 6 years on upper bunk
- Use only a mattress that is __ inches long and __ inches wide on upper bunk
- Ensure thickness of mattress and foundation combined does not exceed __ inches and that mattress surface is at least 5 inches below upper edge of guardrails

DO NOT REMOVE THIS LABEL

BILLING CODE 6355–01–C

§ 1213.6 Instructions

Instructions shall accompany each bunk bed set, and shall include the following information.

(a) *Size of mattress and foundation.* The length and width of the intended mattress and foundation shall be clearly stated, either numerically or in conventional terms such as twin size, twin extra-long, etc. In addition, the maximum thickness of the mattress and foundation required for compliance with § 1213.3(a)(5) and (b)(1) of this standard shall be stated.

(b) *Safety warnings.* The instructions shall provide the following safety warnings:

(1) Do not allow children under 6 years of age to use the upper bunk.

(2) Use guardrails on both sides of the upper bunk.

(3) Prohibit horseplay on or under beds.

(4) Prohibit more than one person on upper bunk.

(5) Use ladder for entering or leaving upper bunk.

§ 1213.7 Findings.

The Consumer Product Safety Act requires that the Commission, in order to issue a standard, make the following findings and include them in the rule. 15 U.S.C. 2058(f)(3).

(a) The rule in this part (including its effective date of [effective date of final rule]) is reasonably necessary to eliminate or reduce an unreasonable risk of injury associated with the product. (1) For a recent 8.75-year period, the CPSC received reports of 57 deaths of children under age 15 who died when they were trapped between the upper bunk of a bunk bed and the wall or when they were trapped in openings in the bed's end structure. Over 96% of those who died in entrapment incidents were age 3 or younger. On average, averting these deaths is expected to produce a benefit to society with a present value of about $175 to $350 for each bed that otherwise would not have complied with one or more of the rule's requirements.

(2) This increased safety will be achieved in two ways. First, all bunk beds will be required to have a guardrail on both sides of the bed. If the bed is placed against a wall, the guardrail on that side is expected to prevent a child from being entrapped between the bed and the wall. The guardrail on the wall side of the bed must extend continuously from one end to the other. Second, the end structures of the bed must be constructed so that, if an opening in the end structure is large enough so a child can slip his or her body through it, it must be large enough that the child's head also can pass through.

(3) For the reasons discussed in paragraph (d) of this section, the benefits of the changes to bunk beds caused by this rule will have a reasonable relationship to the changes' costs. The rule addresses a risk of death, and applies primarily to a vulnerable population, children under age 3. The life-saving features required by the rule are cost-effective and can be implemented without adversely affecting the performance and availability of the product. The effective date provides enough time so that production of bunk beds that do not already comply with the standard can easily be changed so that the beds comply. Accordingly, the Commission finds that the rule (including its effective date) is reasonably necessary to eliminate or reduce an unreasonable risk of injury associated with the product.

(b) Promulgation of the rule is in the public interest. For the reasons given in paragraph (a) of this section, the Commission finds that promulgation of the rule is in the public interest.

(c) Where a voluntary standard has been adopted and implemented by the affected industry, that compliance with such voluntary standard is not likely to result in the elimination or adequate reduction of the risk of injury; or it is unlikely that there will be substantial compliance with such voluntary standard.

(1) Adequacy of the voluntary standard. (i) In this instance, there is a voluntary standard addressing the risk of entrapment in bunk beds. However, the rule goes beyond the provisions of the voluntary standard. First, it eliminates the voluntary standard's option to have an opening of up to 15 inches at each end of the wall-side guardrail. Second, it requires more of the lower bunk end structures to have entrapment protection. The voluntary standard protects against entrapment only within the 9-inch space immediately above the upper surface of the lower bunk's mattress. The mandatory standard extends this area of protection upward to the level of the underside of the upper bunk foundation. Both of these provisions, which are in the rule but not in the voluntary standard, address fatalities and, as noted in this section, have benefits that bear a reasonable relationship to their costs. Furthermore, the absence of any identification of the manufacturer on many beds has resulted in extremely low recall effectiveness rates. The standard requires that the name and address of the manufacturer, distributor, or retailer be on the beds.

(ii) Therefore, the Commission finds that compliance with the voluntary standard is not likely to result in the elimination or adequate reduction of the risk of entrapment injury or death.

(2) *Substantial compliance.* (i) Neither the CPSA nor the FHSA define ''substantial compliance.'' In dealing with this issue as it applies to bunk beds, the Commission concludes that substantial compliance does not exist where a mandatory rule would achieve a higher degree of compliance. Two key, although not necessarily exclusive, considerations in making this determination are whether, as complied with, the voluntary standard would achieve virtually the same degree of injury reduction that a mandatory standard would achieve and whether the injury reduction will be achieved in a timely manner.

(ii) The Commission has considered carefully the particular characteristics of the bunk bed industry. This industry is highly diverse and fragmented, with differing levels of sophistication relating to product safety. Firms can easily enter and leave the bunk bed manufacturing business. This fragmentation and diversity contributes to difficulties in achieving more complete compliance with the voluntary standard. Because it is difficult to identify all firms in the industry, it is difficult for voluntary standards organizations and trade associations to conduct outreach and education efforts regarding the voluntary standard. By contrast, in industries with a small number of firms, it is easier to find the firms and educate them about the existence and importance of voluntary standards. Mandatory standards—codified in the accessible Code of Federal Regulations—are easier to locate, and their significance is more obvious.

(iii) These generalizations about the industry are supported by the CPSC's staff's enforcement experience. Some manufacturers contacted by CPSC's Compliance staff did not see an urgency to comply with a ''voluntary'' standard, and they did not recognize the hazards associated with noncompliance. Other manufacturers were not even aware of the standard. As a result, entrapment hazards would continue to exist on beds, in use and for sale, in the absence of a mandatory standard.

(iv) A mandatory standard will also reduce the staff's workload in ensuring that children are not exposed to bunk beds presenting entrapment hazards. In the several years before issuance of this rule, the staff expended significant

resources to obtain the then-current level of conformance to the voluntary standard. The Commission believes that fewer resources will be required to enforce the mandatory standard than were previously used to identify defective bunk beds.

(v) For these reasons, the Commission believes that a mandatory bunk bed entrapment standard is needed. This mandatory standard is expected to bring the following benefits:

(A) A mandatory standard should increase the awareness and sense of urgency of manufacturers in this industry regarding compliance with the entrapment provisions, thereby increasing the degree of conformance to those provisions.

(B) A mandatory standard allows the Commission to seek penalties for violations. Publicizing fines for noncompliance with a mandatory standard would deter other manufacturers from making noncomplying beds.

(C) A mandatory standard allows state and local officials to assist CPSC staff in identifying noncomplying bunk beds and to take action to prevent the sale of these beds.

(D) Under a mandatory standard, retailers and distributors violate the law if they sell noncomplying bunk beds. For that reason, retailers and retail associations will insist that manufacturers and importers provide complying bunk beds.

(E) The bunk bed industry is extremely competitive. Manufacturers who now conform to the voluntary standard have expressed concern about those firms that do not. Nonconforming beds can undercut the cost of conforming beds. A mandatory standard will take away any competitive cost advantage for unsafe beds.

(F) A mandatory standard will help prevent noncomplying beds made by foreign manufacturers from entering the United States. CPSC could use the resources of U.S. Customs to assist in stopping hazardous beds at the docks.

(3) Therefore, there is not substantial compliance with the voluntary standard. (This does not mean that the Commission would conclude that a mandatory standard will always be more effective than a voluntary standard. Each case must be considered on its own facts.)

(d) The benefits expected from the rule bear a reasonable relationship to its costs. (1) Compliance with ASTM's requirements. The cost of providing a second guardrail for bunk beds that do not have one is expected to be from $15–40 per otherwise noncomplying bed. If, as expected, the standard prevents virtually all of the deaths it addresses, the present value of the benefits of this modification are estimated to be from $175–350 per otherwise noncomplying bed. Thus, the benefit of this provision is about 4–23 times its cost.

(2) Providing a continuous guardrail. The voluntary standard allows up to a 15-inch gap in the coverage of the guardrail on the wall side of the upper bunk. Additional entrapment deaths are addressed by requiring that the wall-side guardrail be continuous from one end of the bed to the other. The estimated present value of the benefits of this requirement is $2.40 to $3.50 per otherwise noncomplying bed. The Commission estimates that the materials cost to extend one guardrail an additional 30 inches will be less than the present value of the benefits of making the change. Further, the costs of any design changes can be amortized over the number the bunk beds manufactured after the design change is made. Thus, the costs of any design change will be nominal.

(3) Lower bunk end structures. The Commission is aware of a death, involving entrapment in the end structures of the lower bunk, occurring in a scenario not currently addressed by the voluntary standard. This death would be addressed by extending the voluntary standard's lower bunk end structures entrapment provisions from 9 inches above the lower bunk's sleeping surface to the bottom of the upper bunk. The Commission expects the costs of this requirement to be design-related only, and small. Indeed, for some bunk beds, materials costs may decrease since less material may be required to comply with these requirements than is currently being used. Again, the design costs for this modification to the end structures can be amortized over the subsequent production run of the bed.

(4) Effect on market. The small additional costs from any wall guardrail and end structure modifications are not expected to affect the market for bunk beds, either alone or added to the costs of compliance to ASTM's provisions.

(5) Conclusion. The Commission has no reason to conclude that any of the standard's requirements will have costs that exceed the requirement's expected benefits. Further, the total effect of the rule is that the benefits of the rule will exceed its costs by about 4–23 times. Accordingly, the Commission concludes that the benefits expected from the rule will bear a reasonable relationship to its costs.

(e) The rule imposes the least burdensome requirement that prevents or adequately reduces the risk of injury for which the rule is being promulgated. (1) The Commission considered relying on the voluntary standard, either alone or combined with a third-party certification program. However, the Commission concluded that a mandatory program will be more effective in reducing these deaths. Accordingly, these alternatives would not prevent or adequately reduce the risk of injury for which the rule is being promulgated.

(2) The Commission also considered a suggestion that bunk beds that conformed to the voluntary standard be so labeled. Consumers could then compare conforming and nonconforming beds at the point of purchase and make their purchase decisions with this safety information in mind. This, however, would not necessarily reduce injuries, because consumers likely would not know there is a voluntary standard and thus would not see any risk in purchasing a bed that was not labeled as conforming to the standard.

(3) For the reasons stated in this section, no alternatives to a mandatory rule were suggested that would adequately reduce the deaths caused by entrapment of children in bunk beds. Accordingly, the Commission finds that this rule imposes the least burdensome requirement that prevents or adequately reduces the risk of injury for which the rule is being promulgated.

Figure 1 to Part 1213—Wedge Block for Tests in § 1213.4(a), (b) and (c).

BILLING CODE 6355–01–P

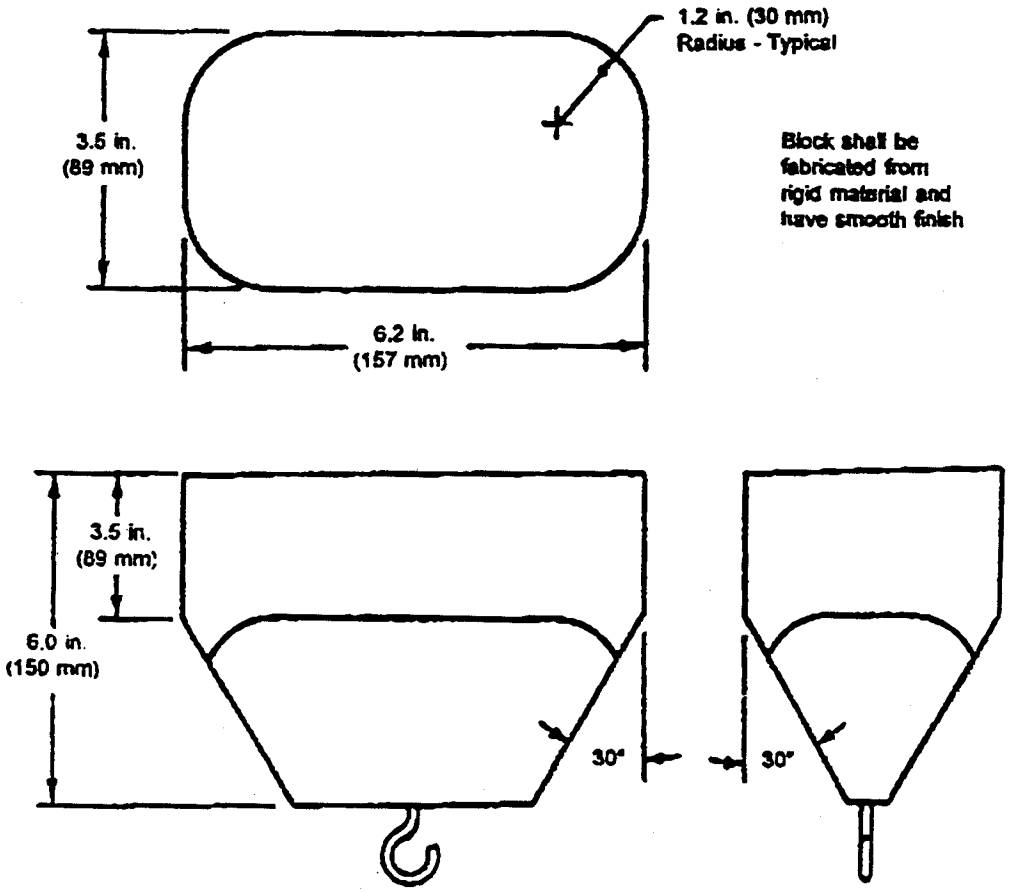

BILLING CODE 6355–01–C

2. The authority citation for part 1500 continues to read as follows:

Authority: 15 U.S.C. 1261–1278.

3. Section 1500.18 is amended by adding paragraph (a)(18) to read as follows:

§ 1500.18 Banned toys and other banned articles intended for use by children.

(a) * * *

(18) (i) Any bunk bed (as defined in § 1513.2(c) of this chapter) that does not comply with the requirements of part 1513 of this chapter.

(ii) Findings—(A) General. In order to issue a rule under Section 3(e) of the Federal Hazardous Substances Act (FHSA), 15 U.S.C. 1262(e), classifying a toy or other article intended for use by children as a hazardous substance on the basis that it presents a mechanical hazard (as defined in Section 2(s) of the FHSA), the FHSA requires the Commission to make certain findings and to include these findings in the regulation. These findings are discussed in paragraphs (a)(18)(B) through (D) of this section.

(B) Where a voluntary standard has been adopted and implemented by the affected industry, that compliance with such voluntary standard is not likely to result in the elimination or adequate reduction of the risk of injury, or it is unlikely that there will be substantial compliance with such voluntary standard.

(*1*) *Adequacy of the voluntary standard.* (*i*) In this instance, there is a voluntary standard addressing the risk of entrapment in bunk beds. However, the rule goes beyond the provisions of the voluntary standard. First, it eliminates the voluntary standard's option to have an opening of up to 15 inches at each end of the wall-side guardrail. Second, it requires more of the lower bunk end structures to have entrapment protection. The voluntary standard protects against entrapment only within the 9-inch space immediately above the upper surface of the lower bunk's mattress. The mandatory standard extends this area of protection upward to the level of the underside of the upper bunk foundation. Both of these provisions, which are in the rule but not in the voluntary standard, address fatalities and, as noted in this paragraph (a)(18), have benefits that bear a reasonable relationship to their costs. Furthermore, the absence of any identification of the manufacturer on many beds has resulted in extremely low recall effectiveness rates. The standard requires that the name and address of the manufacturer, distributor, or retailer be on the beds.

(*ii*) Therefore, the Commission finds that compliance with the voluntary standard is not likely to result in the elimination or adequate reduction of the risk of entrapment injury or death.

(*2*) *Substantial compliance.* (*i*) Neither the CPSA nor the FHSA define ''substantial compliance.'' In dealing with this issue as it applies to bunk beds, the Commission concludes that substantial compliance does not exist where a mandatory rule would achieve a higher degree of compliance. Two key, although not necessarily exclusive, considerations in making this determination are whether, as complied with, the voluntary standard would achieve virtually the same degree of injury reduction that a mandatory standard would achieve and whether the injury reduction will be achieved in a timely manner.

(*ii*) The Commission has considered carefully the particular characteristics of the bunk bed industry. This industry is highly diverse and fragmented, with differing levels of sophistication relating to product safety. Firms can easily enter and leave the bunk bed manufacturing business. This fragmentation and

diversity contributes to difficulties in achieving more complete compliance with the voluntary standard. Because it is difficult to identify all firms in the industry, it is difficult for voluntary standards organizations and trade associations to conduct outreach and education efforts regarding the voluntary standard. By contrast, in industries with a small number of firms, it is easier to find the firms and educate them about the existence and importance of voluntary standards. Mandatory standards—codified in the accessible Code of Federal Regulations—are easier to locate, and their significance is more obvious.

(*iii*) These generalizations about the industry are supported by the CPSC staff's enforcement experience. Some manufacturers contacted by CPSC's Compliance staff did not see an urgency to comply with a ''voluntary'' standard, and they did not recognize the hazards associated with noncompliance. Other manufacturers were not even aware of the standard. As a result, entrapment hazards would continue to exist on beds, in use and for sale, in the absence of a mandatory standard.

(*iv*) A mandatory standard will also reduce the staff's workload in ensuring that children are not exposed to bunk beds presenting entrapment hazards. In the past several years, the staff has expended significant resources to obtain the current level of conformance to the voluntary standard. The Commission expects that fewer resources will be required to enforce the mandatory standard than are currently being used to identify defective bunk beds.

(*v*) For these reasons, the Commission believes that a mandatory bunk bed entrapment standard is needed. This mandatory standard will bring the following benefits: A mandatory standard should increase the awareness and sense of urgency of manufacturers in this industry regarding compliance with the entrapment provisions, thereby increasing the degree of conformance to those provisions. A mandatory standard allows the Commission to seek penalties for violations. Publicizing fines for noncompliance with a mandatory standard would deter other manufacturers from making noncomplying beds. A mandatory standard allows state and local officials to assist CPSC staff in identifying noncomplying bunk beds and to take action to prevent the sale of these beds. Under a mandatory standard, retailers and distributors violate the law if they sell noncomplying bunk beds. For that reason, retailers and retail associations will insist that manufacturers and importers provide complying bunk beds. The bunk bed industry is extremely competitive. Manufacturers who conform to the voluntary standard have expressed concern about those firms that do not. Nonconforming beds can undercut the cost of conforming beds. A mandatory standard will take away any competitive cost advantage for unsafe beds. A mandatory standard will help prevent noncomplying beds made by foreign manufacturers from entering the United States. CPSC could use the resources of U.S. Customs to assist in stopping hazardous beds at the docks.

(*vi*) Therefore, there is not substantial compliance with the voluntary standard. (This does not mean that the Commission would conclude that a mandatory standard will always be more effective than a voluntary standard. Each case must be considered on its own facts.)

(C) The benefits expected from the rule bear a reasonable relationship to its costs. (*1*) Compliance with ASTM's requirements. The cost of providing a second guardrail for bunk beds that do not have one is expected to be from $15–40 per otherwise noncomplying bed. If, as expected, the standard prevents virtually all of the deaths it addresses, the present value of the benefits of this modification are estimated to be from $175–350 per otherwise noncomplying bed. Thus, the benefit of this provision is about 4–23 times its cost.

(*2*) Providing a continuous guardrail. The voluntary standard allows up to a 15-inch gap in the coverage of the guardrail on the wall side of the upper bunk. Additional entrapment deaths are addressed by requiring that the wall-side guardrail be continuous from one end of the bed to the other. The estimated present value of the benefits of this requirement will be $2.40 to $3.50 per otherwise noncomplying bed. The Commission estimates that the materials cost to extend one guardrail an additional 30 inches will be less than the present value of the benefits of making the change. Further, the costs of any design changes can be amortized over the number of bunk beds produced after the design change is made. Thus, any design costs are nominal.

(*3*) Lower bunk end structures. The Commission is aware of a death, involving entrapment in the end structures of the lower bunk, occurring in a scenario not currently addressed by the voluntary standard. This death is addressed by extending the upper limit of the voluntary standard's lower bunk end structures entrapment provisions from 9 inches above the lower bunk's sleeping surface to the bottom of the upper bunk. The Commission expects the costs of this requirement to be design-related only, and small. Indeed, for some bunk beds, material costs may decrease since less material may be required to comply with these requirements than are currently being used. Again, the design costs for this modification to the end structures can be amortized over the subsequent production run of the bed.

(*4*) Effect on market. The small additional costs from any wall guardrail and end structure modifications are not expected to affect the market for bunk beds, either alone or added to the costs of compliance to ASTM's provisions.

(*5*) Conclusion. The Commission has no reason to conclude that any of the standard's requirements have costs that exceed the requirement's expected benefits. Further, the total effect of the rule is that the benefits of the rule will exceed its costs by about 4–23 times. Accordingly, the Commission concludes that the benefits expected from the rule bear a reasonable relationship to its costs.

(D) The rule imposes the least burdensome requirement that prevents or adequately reduces the risk of injury for which the rule is being promulgated. (*1*) The Commission considered relying on the voluntary standard, either alone or combined with a third-party certification program. However, the Commission concludes that a mandatory program will be more effective in reducing these deaths. Accordingly, these alternatives could not prevent or adequately reduce the risk of injury for which the rule is being promulgated.

(*2*) The Commission also considered a suggestion that bunk beds that conformed to the voluntary standard be so labeled. Consumers could then compare conforming and nonconforming beds at the point of purchase and make their purchase decisions with this safety information in mind. This, however, would not necessarily reduce injuries, because consumers likely would not know there is a voluntary standard and thus would not see any risk in purchasing a bed that was not labeled as conforming to the standard.

4. A new part 1513 is added to Subchapter C to read as follows:

PART 1513—REQUIREMENTS FOR BUNK BEDS

Sec.
1513.1 Scope, application, and effective date.
1513.2 Definitions.
1513.3 Requirements.
1513.4 Test methods.
1513.5 Marking and labeling.

1513.6 Instructions.

Figure 1 to Part 1513—Wedge Block for Tests

Authority: 15 U.S.C. 1261(f)(1)(D), 1261(s), 1262(e)(1), 1262(f)–(i).

§ 1513.1 Scope, application, and effective date.

This part 1513 prescribes requirements for bunk beds to reduce or eliminate the risk that children will die or be injured from being trapped between the upper bunk and the wall or in openings below guardrails or in other structures in the bed. Bunk beds meeting these requirements are exempted from 16 CFR 1500.18(a)(18). This part applies to all bunk beds intended for use by children that are sold for residential use and manufactured in the United States, or imported, after [the effective date of the final rule]. Bunk beds as described in this section that are not intended for use by children are subject to the requirements in 16 CFR part 1213, and not to 16 CFR 1500.18(a)(18). However, the provisions of 16 CFR 1213 are substantively identical to the requirements in this part 1513.

§ 1513.2 Definitions.

As used in this part 1513:

(a) *Bed.* See *Bunk bed.*

(b) *Bed end structure* means an upright unit at the head and foot of the bed to which the side rails attach.

(c) *Bunk bed* means a bed in which the underside of any foundation is over 30 inches (760 mm) from the floor.

(d) *Foundation* means the base or support on which a mattress rests.

(e) *Guardrail* means a rail or guard on a side of the upper bunk to prevent a sleeping occupant from falling or rolling out.

§ 1513.3 Requirements.

(a) *Guardrails.* (1) Any bunk bed shall provide at least two guardrails, at least one on each side of the bed.

(2) One guardrail shall be continuous between each of the bed's end structures. The other guardrail may terminate before reaching the bed's end structures, providing there is no more than 15 inches (380 mm) between either end of the guardrail and the nearest bed end structure.

(3) For bunk beds designed to have a ladder attached to one side of the bed, the continuous guardrail shall be on the other side of the bed.

(4) Guardrails shall be attached so that they cannot be removed without either intentionally releasing a fastening device or applying forces sequentially in different directions.

(5) The upper edge of the guardrails shall be no less than 5 inches (130 mm) above the top surface of the mattress when a mattress of the maximum thickness specified by the manufacturer's instructions is on the bed.

(6) With no mattress on the bed, there shall be no openings in the structure between the lower edge of the uppermost member of the guardrail and the underside of the upper bunk's foundation that would permit passage of the wedge block shown in Fig. 1 when tested in accordance with the procedure at § 1513.4(a).

(b) *Bed end structures.* (1) The upper edge of the upper bunk end structures shall be at least 5 inches (130 mm) above the top surface of the mattress for at least 50 percent of the distance between the two posts at the head and foot of the upper bunk when a mattress and foundation of the maximum thickness specified by the manufacturer's instructions is on the bed.

(2) With no mattress on the bed, there shall be no openings in the rigid end structures above the foundation of the upper bunk that will permit the free passage of the wedge block shown in Fig. 1 when tested in accordance with the procedure at § 1513.4(b).

(3) When tested in accordance with § 1513.4(c), there shall be no openings in the end structures between the underside of the foundation of the upper bunk and upper side of the foundation of the lower bunk that will permit the free passage of the wedge block shown in Fig. 1, unless the openings are also large enough to permit the free passage of a 9-inch (230-mm) diameter rigid sphere.

§ 1513.4 Test methods.

(a) *Guardrails* (see § 1513.3(a)(6)). With no mattress on the bed, place the wedge block shown in Fig. 1, tapered side first, into each opening in the rigid bed structure below the lower edge of the uppermost member of the guardrail and above the underside of the upper bunk's foundation. Orient the block so that it is most likely to pass through the opening (e.g., the major axis of the block parallel to the major axis of the opening) (''most adverse orientation''). Then, gradually apply a 33-lbf (147-N) force in a direction perpendicular to the plane of the large end of the block. Sustain the force for 1 minute.

(b) *Upper bunk end structure* (see § 1513.3(b)(2)). Without a mattress or foundation on the upper bunk, place the wedge block shown in Fig. 1 into any opening, tapered side first, and in the most adverse orientation. Determine if the wedge block can pass freely through the opening.

(c) *Lower bunk end structure* (see § 1513.3(b)(3)). (1) Without a mattress or foundation on the lower bunk, place the wedge block shown in Fig. 1, tapered side first, into each opening in the lower bunk end structure in the most adverse orientation. Determine whether the wedge block can pass freely through the opening. If the wedge block passes freely through the opening, determine whether a 9-inch (230-mm) diameter rigid sphere can pass freely through the opening.

(2) With the manufacturer's recommended maximum thickness mattress and foundation in place, repeat the test in paragraph (c)(1) of this section.

§ 1513.5 Marking and labeling.

(a) There shall be a permanent label or marking on each bed stating the name and address (city, state, and zip code) of the manufacturer, distributor, or retailer; the model number; and the month and year of manufacture.

(b) The following warning label shall be permanently attached to the inside of an upper bunk bed end structure in a location that cannot be covered by the bedding but that may be covered by the placement of a pillow.

BILLING CODE 6355–01–P

⚠ WARNING

To help prevent serious or fatal injuries from entrapment or falls:

- Never allow a child under 6 years on upper bunk
- Use only a mattress that is __ inches long and __ inches wide on upper bunk
- Ensure thickness of mattress and foundation combined does not exceed __ inches and that mattress surface is at least 5 inches below upper edge of guardrails

DO NOT REMOVE THIS LABEL

BILLING CODE 6355–01–C

§ 1513.6 Instructions

Instructions shall accompany each bunk bed set, and shall include the following information.

(a) *Size of mattress and foundation.* The length and width of the intended mattress and foundation shall be clearly stated, either numerically or in conventional terms such as twin size, twin extra-long, etc. In addition, the maximum thickness of the mattress and foundation required for compliance with § 1513.3(a)(5) and (b)(1) shall be stated.

(b) *Safety warnings.* The instructions shall provide the following safety warnings:

(1) Do not allow children under 6 years of age to use the upper bunk.

(2) Use guardrails on both sides of the upper bunk.

(3) Prohibit horseplay on or under beds.

(4) Prohibit more than one person on upper bunk.

(5) Use ladder for entering or leaving upper bunk.

Figure 1 to Part 1513—Wedge Block for Tests in § 1531.4(a), (b) and (c).

BILLING CODE 6355–01–P

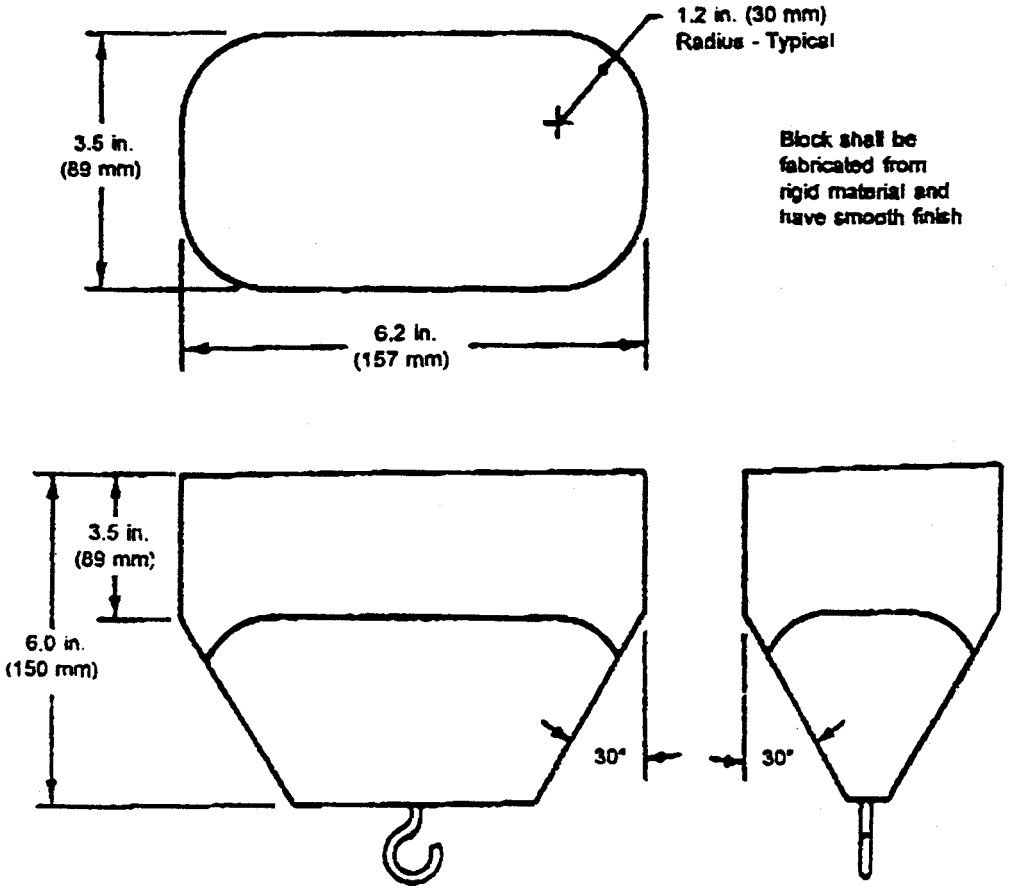

BILLNG CODE 6355–01–C

Dated: February 5, 1999.

Sadye E. Dunn,

Secretary, Consumer Product Safety Commission.

[FR Doc. 99–3304 Filed 3–2–99; 8:45 am]

BILLING CODE 6355–01–P

DEPARTMENT OF THE TREASURY

Internal Revenue Service

26 CFR Part 1

[REG–104072–97]

RIN 1545–AV07

Recharacterizing Financing Arrangements Involving Fast-Pay Stock; Correction

AGENCY: Internal Revenue Service (IRS), Treasury.

ACTION: Correction to notice of proposed rulemaking.

SUMMARY: This document contains a correction to REG–104072–97, which was published in the **Federal Register** on Wednesday, January 6, 1999 (64 FR 805), relating to financing arrangements involving fast-pay stock.

FOR FURTHER INFORMATION CONTACT: Jonathan Zelnik, (202) 622–3940 (not a toll-free number).

SUPPLEMENTARY INFORMATION:

Background

The notice of proposed rulemaking that is the subject of this correction is under section 7701 of the Internal Revenue Code.

Need for Correction

As published, REG–104072–97 contains errors which may prove to be misleading and are in need of clarification.

Correction of Publication

Accordingly, the publication of the notice of proposed rulemaking (REG–104072–97), which is the subject of FR Doc. 99–178, is corrected as follows:

§ 1.1441–7 [Corrected]

1. On page 810, column 1, § 1.1441–7(g)(4) *Example 2,* line 4, the language ''that A entered the arrangement with a'' is corrected to read ''that A entered into the arrangement with a''.

§ 1.7701(l)–3 [Corrected]

2. On page 810, column 3, § 1.7701(l)–3(c)(3)(iv)(A), line 3, the language ''attributable to financing instruments)'' is corrected to read ''attributable to the financing instruments)''.

3. On page 811, column 3, § 1.7701(l)–3(e) *Example 5,* (i), line 3 from the bottom of the paragraph, the language ''Y's 1996 deduction attributable to financing'' is corrected to read ''Y's 1996 deduction attributable to the financing''.

Cynthia E. Grigsby,

Chief, Regulations Unit, Assistant Chief Counsel (Corporate).

[FR Doc. 99–5128 Filed 3–2–99; 8:45 am]

BILLING CODE 4830–01–U

DEPARTMENT OF JUSTICE

28 CFR Part 25

[AG Order No. 2209–99]

RIN 1105–AA51

National Instant Criminal Background Check System Regulation

AGENCY: Federal Bureau of Investigation, Department of Justice.

ACTION: Proposed rule.

SUMMARY: The United States Department of Justice (''DOJ'') proposes to amend the DOJ regulation implementing the