Federal Register

Thursday,
January 13, 2005

Part II

Consumer Product Safety Commission

16 CFR Parts 1633 and 1634

Standard for the Flammability (Open Flame) of Mattresses and Mattress/Foundation Sets; Standard To Address Open Flame Ignition of Bedclothes; Proposed Rules

CONSUMER PRODUCT SAFETY COMMISSION

16 CFR Part 1633

Standard for the Flammability (Open Flame) of Mattresses and Mattress/Foundation Sets; Notice of Proposed Rulemaking

AGENCY: Consumer Product Safety Commission.

ACTION: Notice of proposed rulemaking.

SUMMARY: The Commission is proposing a flammability standard under the authority of the Flammable Fabrics Act that would address open flame ignition of mattresses and mattress and foundation sets (''mattresses/sets''). The Commission currently has a flammability standard that addresses ignition of mattresses by cigarettes. However, that standard does not address mattress fires ignited by open flames. The proposed standard sets performance requirements based on research conducted by the National Institute of Standards and Technology (''NIST''). Mattresses/sets that comply with the proposed requirements will generate a smaller size fire, thus reducing the possibility of flashover occurring. These improved mattresses should result in significant reductions in deaths and injuries associated with mattress fires. Due to the interaction of mattresses and bedclothes discussed herein, elsewhere in today's **Federal Register** the Commission is publishing an advance notice of proposed rulemaking to begin rulemaking on bedclothes.

DATES: Written comments in response to this document must be received by the Commission not later than March 29, 2005. Comments on elements of the proposed rule that, if issued in final form would constitute collection of information requirements under the Paperwork Reduction Act, may be filed with the Office of Management and Budget (''OMB'') and with the Commission. Comments will be received by OMB until March 14, 2005.

ADDRESSES: Comments should be filed by email to *cpsc-os@cpsc.gov*. Comments also may be filed by telefacsimile to (301)504–0127 or mailed, preferably in five copies, to the Office of the Secretary, Consumer Product Safety Commission, Washington, DC 20207–0001, or delivered to the Office of the Secretary, Consumer Product Safety Commission, Room 502, 4330 East-West Highway, Bethesda, Maryland; telephone (301) 504–7530. Comments should be captioned ''Mattress NPR.''

Comments to OMB should be directed to the Desk Officer for the Consumer Product Safety Commission, Office of Information and Regulatory Affairs, OMB, Washington, DC 20503. The Commission asks commenters to provide copies of such comments to the Commission's Office of the Secretary, with a caption or cover letter identifying the materials as comments submitted to OMB on the proposed collection of information requirements for the proposed mattress standard.

FOR FURTHER INFORMATION CONTACT: Margaret Neily, Directorate for Engineering Sciences, Consumer Product Safety Commission, Washington, DC 20207; telephone (301) 504–7530.

SUPPLEMENTARY INFORMATION:

A. Background

On October 11, 2001, the Commission issued an advance notice of proposed rulemaking (''ANPR'') concerning the open flame ignition of mattresses/bedding. 66 FR 51886. The ANPR was the result of the staff's evaluation of fire data over the course of several years and petitions filed by Whitney Davis, director of the Children's Coalition for Fire-Safe Mattresses (''CCFSM''). Although the Commission has an existing mattress flammability standard that addresses ignition by cigarettes, 16 CFR Part 1632, no current Commission standard directly addresses open flame ignition of mattresses. The most common open flame sources are lighters, candles and matches. The Commission is now issuing a notice of proposed rulemaking (''NPR'') proposing a flammability standard to address open flame ignition of mattresses.[1]

Characteristics of mattress/bedding fires. A burning mattress generally provides the biggest fuel load in a typical bedroom fire. Once the mattress ignites, the fire develops rapidly creating dangerous flashover conditions. Flashover is the point at which the entire contents of a room are ignited simultaneously by radiant heat, making conditions in the room untenable and safe exit from the room impossible. At flashover, room temperatures typically exceed 600–800 C (approximately 1100–1470 F). In these conditions, carbon monoxide rapidly increases, and oxygen is rapidly depleted. Mattress fires that lead to flashover are responsible for about two-thirds of all mattress fatalities. This accounts for nearly all of the fatalities that occur outside the room where the fire originated and about half of the fatalities that occur within the room of origin. A mattress that reduces the likelihood of reaching flashover could significantly reduce deaths and injuries associated with bedroom fires. [1&2] [2]

The size of a fire is measured by its rate of heat release. A heat release rate of approximately 1,000 kilowatts (''kW'') leads to flashover in a typical room. Tests of twin size mattresses of traditional construction (complying with the existing mattress standard in 16 CFR 1632) without bedclothes have measured peak heat release rates that exceeded 2,000 kW in less than 5 minutes. Tests of traditional king size mattresses measured nearly double that peak rate of heat release. [2]

Fire modeling and available test data show that as a room fire grows, a layer of accumulating hot gases and smoke thickens downward from the ceiling. For fires exceeding 600 kW, this layer typically descends to less than three feet from the floor. Heat release rates exceeding 500 kW are generally considered to pose a serious threat of incapacitation and of igniting nearby items. [2]

The objective of the proposed standard is to limit the size of mattress/bedding fires to below 1,000 kW for a period of time by reducing the heat release from the bed, specifically the mattress and foundation, and by reducing the likelihood that other objects in the room will become involved in the fire.

Research has shown that the mattress, foundation and bedclothes operate as a system in bedroom fires. Often the first item ignited is bedclothes, which then ignite the mattress. The gas burners used in the proposed test method are designed to represent burning bedclothes. Research has indicated that bedclothes themselves can contribute significantly to fires, even reaching heat release rates of up to 800 kW. [2&13] Because of the role of bedclothes in mattress fires, the Commission is initiating a rulemaking on bedclothes through an ANPR that is published elsewhere in today's **Federal Register**. The Commission received numerous comments on the mattress ANPR concerning the role of bedclothes and the need for a rule addressing them. These comments are discussed in section J of this document.

[1] Commissioner Thomas H. Moore issued a statement, a copy of which is available from the Commission's Office of the Secretary or from the Commission's Web site, *http://www.cpsc.gov*.

[2] Numbers in brackets refer to documents listed at the end of this notice. They are available from the Commission's Office of the Secretary (see ''Addresses'' section above) or from the Commission's Web site (*http://www.cpsc.gov/library/foia/foia.html*).

NIST research. The industry's Sleep Products Safety Council (''SPSC''), an affiliate of the International Sleep Products Association (''ISPA''), sponsored a research program at the National Institute of Standards and Technology (''NIST'') to better understand mattress/bedding fires and establish the technological basis for future performance requirements of a standard. NIST has conducted extensive research, which has become the basis for California's open flame mattress standard (Technical Bulletin or ''TB'' 603) and for the Commission's proposed standard.

The NIST research showed that a full-scale test is the most reliable method for measuring fire performance of mattresses/sets because they contain many materials in a complex construction. Because the order of materials, method of assembly, quantity of materials, and quality of construction, among other factors, can affect fire behavior, the complete product may perform differently in a fire than the individual components would. Based on its research, NIST drafted a full-scale test method for mattresses that uses a pair of gas burners to represent burning bedclothes as the ignition source. Both the Commission's proposed standard and California's TB 603, use this test method. [1&2]

Overview of the proposed standard. With certain exceptions explained in section G below, the proposed standard requires manufacturers to test specimens of each of their mattress prototypes (designs) before mattresses based on that prototype may be introduced into commerce. If a mattress and foundation are offered for sale as a set, the mattress must be tested with the corresponding foundation. The prototype specimens are tested using a pair of gas burners as the ignition source. The mattress and corresponding foundation, if any, must not exceed a 200 kW peak heat release rate at any time during the 30 minute test, and the total energy released must be less than 15 megajoules (''MJ'') for the first 10 minutes of the test. The proposed standard is discussed in greater detail in section G of this document.

B. Statutory Authority

This proceeding is conducted pursuant to Section 4 of the Flammable Fabrics Act (''FFA''), which authorizes the Commission to initiate proceedings for a flammability standard when it finds that such a standard is ''needed to protect the public against unreasonable risk of the occurrence of fire leading to death or personal injury, or significant property damage.'' 15 U.S.C. 1193(a).

Section 4 also sets forth the process by which the Commission may issue a flammability standard. As required in section 4(g), the Commission has issued an ANPR. 66 FR 51886. 15 U.S.C. 1193(g). The Commission has reviewed the comments submitted in response to the ANPR and now is issuing a notice of proposed rulemaking (''NPR'') containing the text of the proposed rule along with alternatives the Commission has considered and a preliminary regulatory analysis. 15 U.S.C. 1193(i). The Commission will consider comments provided in response to the NPR and decide whether to issue a final rule along with a final regulatory analysis. 15 U.S.C. 1193(j). The Commission cannot issue a final rule unless it makes certain findings and includes these in the regulation. The Commission must find: (1) If an applicable voluntary standard has been adopted and implemented, that compliance with the voluntary standard is not likely to adequately reduce the risk of injury, or compliance with the voluntary standard is not likely to be substantial; (2) that benefits expected from the regulation bear a reasonable relationship to its costs; and (3) that the regulation imposes the least burdensome alternative that would adequately reduce the risk of injury. 15 U.S.C. 1193(j)(2). In addition, the Commission must find that the standard (1) is needed to adequately protect the public against the risk of the occurrence of fire leading to death, injury or significant property damage, (2) is reasonable, technologically practicable, and appropriate, (3) is limited to fabrics, related materials or products which present unreasonable risks, and (4) is stated in objective terms. 15 U.S.C. 1193(b).

C. The Product

The proposed standard applies to mattresses and mattress and foundation sets (''mattresses/sets''). Mattress is defined as a resilient material, used alone or in combination with other materials, enclosed in a ticking and intended or promoted for sleeping upon. This includes adult mattresses, youth mattresses, crib mattresses (including portable crib mattresses), bunk bed mattresses, futons, flip chairs without a permanent back or arms, sleeper chairs, and water beds and air mattresses if they contain upholstery material between the ticking and the mattress core. Mattresses used in items of upholstered furniture such as convertible sofa bed mattresses are also included. Not included as mattresses are: sleeping bags, mattress pads, or other items used on top of the bed, or upholstered furniture which does not contain a mattress. However, the Commission could decide to address mattress pads or other top of the bed items in its rulemaking on bedclothes.

Under the proposed standard, the mattress must be tested with its corresponding foundation if the mattress and foundation are offered for sale as a set. A foundation is a ticking covered structure used to support a mattress.

According to ISPA, the top four producers of mattresses and foundations account for almost 60 percent of total U.S. production. In 2001, there were 639 establishments producing mattresses in the U.S. [10]

Mattresses and foundations are typically sold as sets. However, more mattresses are sold annually than foundations; some mattresses are sold as replacements for existing mattresses (without a new foundation) or are for use in platform beds or other beds that do not require a foundation. ISPA estimated that the total number of U.S. conventional mattress shipments was 21.5 million in 2002, and is estimated to be 22.1 million in 2003 and 22.8 million in 2004. These estimates do not include futons, crib mattresses, juvenile mattresses, sleep sofa inserts, or hybrid water mattresses. These ''non-conventional'' sleep surfaces are estimated to comprise about 10 percent of total annual shipments of all sleep products. The value of mattress and foundation shipments in 2002, according to ISPA, was $3.26 and $1.51 billion respectively. [10]

The expected useful life of mattresses can vary substantially, with more expensive models generally experiencing the longest useful lives. Industry sources recommend replacement of mattresses after 10 to 12 years of use, but do not specifically estimate the average life expectancy. In the 2001 mattress ANPR, the Commission estimated the expected useful life of a mattress at about 14 years. To estimate the number of mattresses in use for analysis of the proposed rule, the Commission used both a 10 year and 14 year average product life. Using CPSC's Product Population Model, the Commission estimates the number of mattresses currently in use (*i.e.*, in 2004) to be 233 million mattresses using a ten-year average product life, and 302.6 million mattresses using a fourteen-year average product life. [8&10]

According to industry sources, queen size mattresses are the most commonly used. In 2002, queen size mattresses were used by 34 percent of U.S. consumers. Twin and twin XL are used

by 31.2 percent of U.S. consumers, followed by full and full XL (21 percent), king and California king (11 percent), and all other sizes (2.6 percent). The average manufacturing price in 2002 was $152 for a mattress and $86 for a foundation. Thus, the average manufacturing price of a mattress/foundation set was about $238 in 2002. Although there are no readily available data on average retail prices for mattress/foundation sets by size, ISPA reports that sets selling under $500 represent 40.7 percent of the market. Sets selling for between $500 and $1000 represent 39.2 percent of the market. [10]

The top four manufacturers of mattresses and foundations operate about one-half of the 639 U.S. establishments producing these products. The remainder of the establishments are operated by smaller firms. According to the Statistics of U.S. Businesses Census Bureau data for 2001, there were 557 mattress firms operating these 639 establishments. According to the same data source, all but twelve mattress firms had less than 500 employees. If one considers a firm with fewer than 500 employees to be a small business, then 97.8 percent (557–12/557) of all mattress firms are small businesses. [9&10] The potential impact of the proposed standard on these small businesses is discussed in section M of this document.

D. Risk of Injury

Annual estimates of national fires and fire losses involving ignition of a mattress or bedding are based on data from the U.S. Fire Administration's National Fire Incident Reporting System (''NFIRS'') and the National Fire Protection Administration's (''NFPA'') annual survey of fire departments. The most recent national fire loss estimates indicated that mattresses and bedding were the first items to ignite in 19,400 residential fires attended by the fire service annually during 1995–1999. These fires resulted in 440 deaths, 2,230 injuries and $273.9 million in property loss each year. Of these, the staff considers an estimated 18,500 fires, 440 deaths, 2,160 injuries, and $259.5 million property loss annually to be addressable by the proposed standard. Addressable means the incidents were of a type that would be affected by the proposed standard solely based on the characteristics of the fire cause (*i.e.*, a fire that ignited a mattress or that ignited bedclothes which in turn ignited the mattress). For example, an incident that involved burning bedclothes and occurred in a laundry room would not be considered addressable. [3]

Among the addressable casualties, open flame fires accounted for about 140 deaths (32 percent) and 1,050 injuries (49 percent) annually. Smoking fires accounted for 210 deaths (48 percent) and about 640 injuries (30 percent) annually. Children younger than age 15 accounted for an estimated 120 addressable deaths (27 percent) and 500 addressable injuries (23 percent) annually. Adults age 65 and older accounted for an estimated 120 addressable deaths (27 percent) and 250 addressable injuries (12 percent) annually. [3]

E. NIST Research

Overview. NIST has conducted extensive research on mattress/bedding fires for SPSC and the Commission. SPSC sponsored several phases of research at NIST to gain an understanding of the complex fire scenario involving mattresses and to develop an effective test method to evaluate a mattress's performance when it is exposed to an open flame ignition source. The first phase of the research program, known as Flammability Assessment Methodology for Mattresses, involved four main objectives: (1) Evaluating the behavior of various combinations of bedclothes, (2) characterizing the heat impact imposed on a mattress by bedclothes, (3) developing burners to simulate burning bedclothes, and (4) testing the burners on different mattress designs to ensure their consistency. NIST's findings, published in NISTIR 6498, established the basis for an appropriate test method and the next phase of the research program. [2] [3]

Phase 2 of the NIST research focused on (1) analyzing the hazard by estimating the peak rate of heat release from a mattress with an improved design, (2) measuring a burning mattress's ability to involve nearby items in the room, and (3) assessing (in a limited way) bedclothes and their contribution to mattress fire hazards. This testing used mattresses with improved flammability properties while the flammability properties of bedclothes remained unchanged. [2] The findings from Phase 2 are detailed in NIST Technical Note 1446, Estimating Reduced Fire Risk Resulting from an Improved Mattress Flammability Standard.

Bedclothes. During phase 2, NIST conducted tests on twin and king size mattresses with corresponding size bedclothes. In some tests, the bedclothes contributed up to 400 kW to the fire. NIST had previously estimated that a heat release rate that may cause flashover for an ordinary sized room is about 1000 kW. Thus, a mattress that contributes more than 500 kW at the same time as bedclothes are contributing 400 kW could lead to flashover. NIST conducted additional tests concerning bedclothes for CPSC, which are discussed later in this section. [2]

Other objects in the same room. Part of the NIST study assessed the potential of a bed fire to ignite other objects in the same room. Other objects become involved by either direct flame impingement or by fire generated radiation. Although the location of objects in a bedroom is highly variable, their potential involvement is significantly influenced by their shape and properties relating to ease of ignition. NIST concluded from this research that further reducing the heat release rate from the bed could reduce the potential for ignition of other objects and therefore reduce their contribution to the overall heat release rate. [2]

Modeling. NIST used fire modeling to explore the effect that heat and toxic gases from bed fires can have throughout a home. Fire modeling is an analytical tool that uses mathematical calculations to predict real-world fire behavior. NIST used this modeling to corroborate test data exploring the predicted levels of heat and toxic gases for the room of origin and outside the room of origin. The modeling suggested that untenable fire conditions would occur within the room, with little difference between a small and large room, at 10 minutes and 25 MJ. [2]

Gas burners' correspondence to bedclothes. In addition to the research discussed above, NIST conducted separate studies for CPSC. One series of tests evaluated improved mattress designs and further supported the correlation between full scale mattress tests with the NIST gas burners and actual bedclothes. The study, NISTIR 7006–Flammability Test of Full-Scale Mattresses: Gas Burners Versus Burning Bedclothes, found that mattress designs showing good performance when tested with burners also exhibited significantly improved performance when tested with burning bedclothes. [2]

Interaction between mattresses and bedclothes. NIST's work for CPSC also reinforced observations from previous NIST research on the interaction between the mattress and bedclothes. NISTIR 7006. Tests on improved mattress designs with burning bedclothes as the ignition source tend to have two distinct heat release rate peaks. The first peak is predominantly

[3] NIST publications can be found at NIST's Web site, (*http://fire.nist.gov/bfrlpubs/*).

from the burning bedclothes, while the second is predominantly from the mattress and foundation. In tests of good performing mattress designs, NIST found the second peak (*i.e.*, from the mattress/foundation) to be comparable or lower than the first peak (*i.e.*, from the bedclothes) and to occur appreciably later. [2]

Mattress size. In another study conducted by NIST in 2004 for CPSC, NIST found that a twin size mattress made in a design that yields a very low peak heat release rate (less than 50 kW) tested with gas burners behaves essentially the same as a queen or king size mattress of the same design. Mattress designs that yield a moderate heat release rate peak (greater than 100 kW, but less than 200 kW) tend to behave the same for the first 30 minutes in twin size and king size. After ignition with the burners, the fire is localized (*i.e.*, its spread is limited) and is not affected by the mattress size. [2]

NIST evaluated the same mattress designs and sizes with burning bedclothes. NIST found the mattress size to have an apparent effect during these tests due to the differences in the size and fuel load of bedclothes. In tests of ''well performing'' mattress designs with burning bedclothes, the early heat release rate peak when testing a king size mattress was triple that when testing a twin size mattress. This was driven by the burning bedclothes. Mattress designs that showed a moderate heat release rate peak when tested with gas burners resulted in more serious fires when tested with burning bedclothes, especially in king size mattresses. [2]

F. Existing Open Flame Standards

In the mattress ANPR the staff reviewed 13 existing tests or standards relevant to open flame hazards associated with mattresses/bedding. These included Technical Bulletin (''TB'') 129, TB 121, and TB 117 from California, the Michigan Roll-up Test, and Boston Fire Department (''BFD'') 1X–11, as well as standards from ASTM International (formerly the American Society for Testing and Materials) (ASTM E–1474 and ASTM E–1590), Underwriters Laboratories (UL 1895 and UL 2060), the National Fire Protection Association (NFPA 264A and NFPA 267) and the United Kingdom (British Standard (''BS'') 6807 and BS 5852). 66 FR 51886.

As directed by California Assembly Bill 603, California's Bureau of Home Furnishings and Thermal Insulation (''CBHF'') adopted Technical Bulletin 603 (''TB 603''), an open flame fire standard for mattresses and mattress/box spring sets and futons. TB 603 is expected to go into effect January 1, 2005 and applies to items manufactured for sale in California. The California standard incorporates the same test methodology as the Commission's proposed standard. Both are based on testing and research conducted at NIST. Both TB 603 and the Commission's proposed standard require that mattresses not exceed a 200 kW peak heat release rate during the 30 minute test. However, the Commission's proposed standard requires that mattresses not exceed a total heat release of 15 MJ in the first ten minutes of the test, while TB 603 sets test criteria of 25 MJ in the first 10 minutes of the test.

The Commission believes that the research NIST has conducted, discussed above, establishes the most appropriate basis for an open flame mattress standard. Several comments on the ANPR also expressed this view (see section J of this document).

G. The Proposed Standard

1. General

The proposed standard sets forth performance requirements that each mattress/set must meet before being introduced into commerce. The test method is a full scale test based on the NIST research discussed above. The mattress specimen (a mattress or mattress and foundation set, usually in a twin size) is exposed to a pair of T shaped propane burners and allowed to burn freely for a period of 30 minutes. The burners were designed to represent burning bedclothes. Measurements are taken of the heat release rate from the specimen and energy generated from the fire. The proposed standard establishes two test criteria, both of which the mattress/set must meet in order to comply with the standard: (1) The peak rate of heat release for the mattress/foundation set must not exceed 200 kW at any time during the 30 minute test; and (2) The total heat release must not exceed 15 MJ for the first 10 minutes of the test.

2. Scope

The proposed standard applies to mattresses and mattress and foundation combinations sold as sets. Mattress is defined, as it is in the existing mattress standard at 16 CFR 1632, as ''a resilient material or combination of materials enclosed by a ticking (used alone or in combination with other products) intended or promoted for sleeping upon.'' The proposed standard lists several types of mattresses that are included in this definition (*e.g.*, futons, crib mattresses, youth mattresses). It also refers to a glossary of terms where these items are further defined.

Specifically excluded from the definition of mattress are mattress pads, pillows and other top of the mattress items, upholstered furniture which does not contain a mattress, and juvenile or other product pads. Mattress pads and other top of the bed items may be addressed in the Commission's rulemaking on bedclothes.

Like the Commission's existing mattress standard, the proposed standard allows an exemption for one-of-a-kind mattresses and foundations if they are manufactured to fulfill a physician's written prescription or manufactured in accordance with comparable medical therapeutic specifications.

3. Test Method

The proposed standard uses the full scale test method developed by NIST in the course of its research. Based on the NIST work, the Commission believes that a full scale test is necessary because of the complexities of mattress construction. Testing individual components will not necessarily reveal the likely fire performance of the complete mattress.

Under the proposed standard, the specimen (a mattress and corresponding foundation if they are to be offered for sale together as a set) is exposed to a pair of T-shaped gas burners. The specimen is to be no smaller than twin size, unless the largest size mattress or set produced of that type is smaller than twin size, in which case the largest size must be tested.

The burners impose a specified local heat flux simultaneously to the top and side of the mattress/set for a specified period of time (70 seconds for the top burner and 50 seconds for the side burner). The burners were designed to represent the local heat flux imposed on a mattress by burning bedclothes. The heat flux and burner duration were derived from data obtained from burning a wide range of bedding items. As discussed above, NIST test results using the burners have been shown to correlate with results obtained with bedclothes.

The proposed standard allows the test to be conducted either in an open calorimeter or test room configuration. Tests have shown that either configuration is acceptable. Although room effects (*i.e.*, the size and characteristics of the room) can be a factor in mattress flammability performance, test data show that room effects do not become an issue until a fire reaches about 300 to 400 kW.

Because the proposed standard limits the peak rate of heat release to 200 kW, room effects should not be an issue in the test. Preliminary analysis of data from the inter-laboratory study (discussed in section I) does not suggest any significant differences between tests based on either test configuration. The NIST test method allowed a third test configuration, essentially a smaller test room than described in the proposed standard. However, in addition to safety concerns, using the burners in the smaller size room is awkward. Only one laboratory in the country uses this configuration. Therefore, the Commission decided to propose only the two configurations.

4. Test Criteria

The proposed standard establishes two test criteria that the specimen must meet to pass the test. The peak rate of heat release must not exceed 200 kW at any time during the 30 minute test, and the total heat release must not exceed 15 MJ during the first 10 minutes of the test. [2&8]

Setting the peak rate of heat release limit at 200 kW (during the 30 minute test) ensures a less flammable mattress, reducing the contribution from the mattress, while taking into account that bedclothes and other room contents are likely to contribute to the fire. Numerous technologically feasible mattress designs are available that can meet the 200 kW criterion. Limiting the peak rate of heat release represents a significant improvement in performance compared to the 16 CFR part 1632 cigarette ignition standard for mattresses and will have the most impact on available escape time. A peak rate of heat release lower than 200 kW could limit the mattress design approaches that would meet the standard, thus increasing costs. [2&8] We note that California's TB 603 also prescribes a 200 kW peak rate of heat release.

The proposed standard requires that the total heat release in the first 10 minutes of the test must not exceed 15 MJ. This early limit ensures that the mattress will have little involvement in the fire initially and provides a substantial increase in escape time by slowing the rate of fire growth and severity. The mattress's initial performance is important because if the mattress becomes significantly involved in the early stages of the fire, this will greatly limit the time a person has to escape. [2]

The proposed 15 MJ limit in the first 10 minutes takes into account that bedclothes, and possibly other items, will be burning during this initial period and will contribute significantly to the fire. The Commission believes that the types of ticking (i.e, the outermost fabric or material that covers the mattress) currently used on mattresses can continue to be used with the 15 MJ/10 minute criteria. [2] This will allow manufacturers considerable flexibility in their mattress designs because they should be able to change tickings without affecting the mattresses performance under the test method, except in the unusual case where the ticking itself is part of the fire resistance design.

California's TB 603 prescribes a 25 MJ limit in the first 10 minutes of the test. However, NIST research, supported by fire modeling, has shown that untenable fire conditions can occur in a room from a fire producing 25 MJ in the first 10 minutes of a test. This represents the total contribution from all possibly involved items. That is, a fire that reaches a size of 25 MJ within 10 minutes could limit a person's ability to escape the room. According to the mattress industry and available test data, there are numerous technologically feasible approaches to mattress designs for meeting the proposed 15 MJ /first 10 minute limit. [2]

The 30 minute test duration is related to, but not equivalent to, the estimated time required to permit discovery of the fire and allow escape under typical fire scenarios. A mattress complying with the proposed criteria under the 30 minute test is estimated to provide an adequate time for discovery of and escape from the fire under certain conditions or assuming the bedclothes do not contribute to the extent of posing a hazardous condition early in the fire. Compared to current scenarios, this is a substantial increase in estimated escape time. The effectiveness of the estimated escape time is based on timely escape from the potentially hazardous conditions. [2&3]

Multiple test results indicate that a large number of mattress designs (using a range of fire retardant barrier technologies) can perform well in tests with gas burners for 30 minutes. Many of the tested designs are able to meet the proposed test criteria for 30 minutes, but perform erratically after 30 minutes. The number of failures, test variability, and performance unreliability increases after 30 minutes. A substantial range of technologically feasible and viable solutions and design choices exist that meet the proposed test criteria for 30 minutes. [2] We note that California's TB 603 also includes a 30 minute test duration.

The Commission considered proposing a 60 minute test duration. However, as discussed above, after 30 minutes, test variability increases, costs increase, and substantially fewer technologically feasible design approaches are available to meet the test. Most importantly, it is unclear from available data that much additional benefit would accrue with a 60 minute test.

5. Prototype Testing

The proposed standard requires, with certain exceptions, that mattress manufacturers must test specimens representative of their mattress/set prototype (design) before introducing a mattress/set into commerce. Mattresses then produced based on the prototype mattress must be identical in all material aspects of their components, materials, and method of construction to the prototype. The term ''manufacturer'' is defined as ''an individual plant or factory at which mattresses and/or mattress and foundation sets are manufactured or assembled.'' The definition includes importers. As in the existing mattress standard (16 CFR part 1632), this definition refers to the establishment where the mattress is produced or assembled, not the company. Thus, the plant or factory producing or assembling the mattress/set is required to conduct prototype testing. This is also true for importers. However, there are three exceptions to this requirement.

A manufacturer is allowed to sell a mattress/set based on a prototype that has not been tested if the prototype differs from a qualified prototype (one that has been tested and meets the criteria) only with respect to: (1) The mattress/foundation size (e.g twin, queen, king etc.); (2) the ticking, unless the qualified ticking has characteristics that are designed to improve the mattress's test performance; and/or (3) any other component, material or method of construction, provided that the manufacturer can show, on an objectively reasonable basis, that such change will not cause the prototype to exceed the specified test criteria. The third numbered option allows a manufacturer to construct and test a ''worst case'' prototype and rely on it to cover a range of related designs without having to perform additional testing. If a manufacturer chooses to take this approach, he/she must maintain records documenting that the change(s) will not cause the prototype to exceed the test criteria (*see* § 1633.11(b)(4) of the proposed rule).

When conducting prototype testing, the manufacturer must test a minimum of three specimens of the prototype in accordance with the test method

described, and all of the mattresses/sets must meet both of the test criteria discussed above. If any one prototype specimen that the manufacturer tests fails the specified criteria, the prototype is not qualified (even if the manufacturer chooses to test more than three specimens).

The Commission believes that three specimens is the appropriate minimum number for testing. Numerous research studies have typically used replicates of three for tests using the developed gas burners. This is also the number industry has generally used as it has researched and developed options for meeting the requirements of California's TB 603. Preliminary analysis of the inter-laboratory study also indicates that three replicates are appropriate to accurately characterize mattress performance. [2] Moreover, because small changes in mattresses' construction or components can affect their flammability, testing more than one mattress will provide a better indication of their performance. [1]

6. Pooling

The proposed standard allows for one or more manufacturers to rely on a given prototype. Under this approach, one manufacturer would conduct (or cause to be conducted) the full prototype testing required (testing three prototype specimens), obtaining passing results, and the other manufacturer(s) may then produce mattresses/sets represented by that prototype so long as they conduct one confirming test on a specimen they produce. If the mattress/set fails the confirming test, the manufacturer must take corrective measures, and then perform a new confirmation test that must meet the test criteria. If a confirmation test specimen fails to meet the test criteria, the manufacturer of that specimen must also notify the manufacturer of the pooled prototype about the test failure. Pooling may be used by two or more plants within the same firm or by two or more independent firms. As discussed in the initial regulatory flexibility analysis, pooling should reduce testing costs for smaller companies. Once they have conducted a successful confirmation test, pooling firms can produce mattresses based on a pooled prototype and may continue to do as long as any changes to the mattresses based on the pooled prototype are limited to the three discussed above: (1) Size of the mattress/foundation; (2) the ticking, unless the qualified ticking has characteristics that are designed to improve the mattress's test performance, and/or (3) any component, material or method of construction that the manufacturer can show (on an objectively reasonable basis) will not cause the prototype to exceed the specified test criteria.

7. Quality Assurance Requirements

Research and testing indicates that small variations in construction of a mattress/set (*e.g.* missed stitching around the side of the mattress) can affect the fire performance of a mattress. Therefore, the proposed standard contains strict requirements for quality assurance. Each manufacturer must implement a quality assurance program to ensure that the mattresses/sets it produces are identical in all material respects to the prototype on which they are based. This means that at a minimum, manufacturers must: (1) Have controls in place on components and materials to ensure that they are identical to those used in the prototype; (2) designate a production lot that is represented by the prototype; and (3) inspect mattresses/sets produced for sale. The Commission is not requiring manufacturers to conduct testing of production mattresses. However, the Commission recognizes the value of such testing as part of a quality assurance program. Therefore, the Commission encourages manufacturers to conduct random testing of mattresses/sets that are produced for sale.

8. Recordkeeping

The proposed standard requires manufacturers to maintain certain records to document compliance with the standard. This includes records concerning prototype testing, pooling and confirmation testing, and quality assurance procedures and any associated testing. The required records must be maintained for as long as mattresses/sets based on the prototype are in production and must be retained for three years thereafter.

The purpose of these recordkeeping requirements is to enable manufacturers to keep track of materials, construction methods and testing. Thus, if a manufacturer produced a mattress/set that failed to meet the test criteria, he/she should be able to use the records to determine the prototype on which the failing mattress was based, as well as the components and method of construction that were used. This information would help the manufacturer correct the problem that caused the mattress to fail the test criteria.

9. Other Requirements: Labeling, One of a Kind Exemption, and Policy on Renovation of Mattresses

Under the proposed standard, each mattress/set must bear a permanent label stating the name and location of the manufacturer, the month and year of manufacture, the model identification, prototype identification number, and a certification that the mattress complies with the standard. By placing the certification on the mattress, the manufacturer is attesting that the specific mattress would comply with the test criteria if tested.

The proposed standard allows an exemption for a one-of-a-kind mattress/set if it is manufactured in response to a physician's written prescription or manufactured in accordance with comparable medical therapeutic specifications.

Subpart C of the proposed standard restates the policy clarification on renovation of mattresses that is in Subpart C of the existing mattress standard (16 CFR Part 1632). The policy statement informs the public that mattresses renovated for sale are considered by the Commission to be newly manufactured for purposes of the requirements of the proposed standard.

H. Effectiveness Evaluation

To determine the potential effectiveness of the proposed standard, CPSC staff conducted an effectiveness evaluation, focusing primarily on reduction of deaths and injuries. The staff's analysis is explained in detail in the memorandum ''Residential Fires Involving Mattresses and Bedding.'' [3] The evaluation was based primarily on review of CPSC investigation reports that provided details of the occupants' situations and actions during the fire. Staff reviewers identified criteria that affected the occupants' ability to escape the fires they had experienced. The staff used these criteria to estimate percentage reductions in deaths and injuries expected to occur under the much less severe fire conditions anticipated with improved designs of mattresses that would comply with the proposed standard. The staff then applied these estimated reductions to national estimates of mattress/bedding fire deaths and injuries to estimate numbers of deaths and injuries that could be prevented with the proposed standard. [3]

As stated in section D of this document, the most recent national fire loss estimates indicated that mattresses and bedding were the first items to ignite in 19,400 residential fires attended by the fire service annually

during 1995—1999. These fires resulted in 440 deaths, 2,230 injuries and $273.9 million in property loss each year. Of these, the staff considers an estimated 18,500 fires, 440 deaths, 2,160 injuries, and $259.5 million property loss annually to be addressable by the proposed standard (*i.e.*, of the type that the proposed standard could affect based on the characteristics of the fire). [3]

Overall, CPSC staff estimates that the proposed standard may be expected to prevent 80 to 86 percent of the deaths and 86 to 92 percent of the injuries presently occurring in addressable mattress/bedding fires attended by the fire service. Applying these percentage reductions to 1998–2002 estimates of addressable mattress/bedding fire losses, staff estimates potential reductions of 310 to 330 deaths and 1,660 to 1,780 injuries annually in fires attended by the fire service when all existing mattresses have been replaced with mattresses meeting the new standard. There may also be reductions in property damage resulting from the proposed standard, but data are not sufficient for the staff to quantify this impact. [3]

I. Inter-Laboratory Study

An inter-laboratory study was conducted with the support of the SPSC, NIST, and participating laboratories to explore the sensitivity, repeatability, and reproducibility of the NIST test method. All of the participating labs conducted multiple tests of eight different mattress designs. The mattress designs varied critical elements (*e.g.*, the barrier—sheet or high-loft, the type of mattress—single or double-sided) and the style of mattress (*e.g.*, tight or pillow top). [2]

Preliminary analysis of the data does not suggest either unreasonable sensitivities (*i.e.*, significantly different test results when minor variations in test procedure are made) or practical limitations in the test protocol. The preliminary analysis suggests that some mattress designs perform more consistently than others. The type of barrier appears to have a significant impact on the performance and repeatability of performance of all mattress designs tested. However, the uniformity of other components and the manufacturing process can also affect the variability in fire performance. [2]

The inter-lab tests also appear to confirm earlier observations that mattresses constructed with currently available barrier technologies are able to limit the fire severity for a substantial but not indefinite time. Most of the tested mattress designs could meet the proposed requirements if the test ended at 30 minutes, but appeared to perform erratically after 30 minutes. [2]

The preliminary analysis, supported by earlier data, suggests that significant variability exists among currently available mattress designs. Although products appear to be moving toward consistency, manufacturers clearly need to control components, materials, and methods of construction. Thus, quality assurance measures, as required in the proposed rule, are important. [2]

The inter-lab study was only recently completed, and the discussion above is based on the staff's preliminary analysis of the results. A final report on the inter-lab study is expected by the end of 2004 and will be available to the public.

J. Response to Comments On the ANPR

On October 11, 2001, the Commission published an ANPR in the **Federal Register**. 66 FR 51886. During the comment period, the Commission received sixteen written comments from businesses, associations and interested parties representing various segments of the mattress and bedding industries. After the close of the comment period, the Commission received a number of additional comments, including one from the California Bureau of Home Furnishings and Thermal Insulation urging the Commission to adopt California's TB 603 as a federal standard. Significant issues raised by all of these comments are discussed below. [14&15]

Mattress Comments

1. *Comment.* Commenters agree that the hazards associated with mattress fires appear to be clearly identified. All of the commenters support the need for an open flame standard for mattresses and initiation of federal rulemaking.

Response. CPSC agrees that mattress and bedding fires continue to be one of the major contributors to residential fire deaths and civilian injuries among products within CPSC's jurisdiction. The most recent national fire loss estimates indicate that mattresses and bedding were the first items to ignite in 19,400 residential fires attended by the fire service annually during 1995—1999. These fires resulted in an estimated 440 deaths, 2,230 injuries, and $273.9 million property loss annually. In these fires, the bedclothes are most frequently ignited by a small open flame source. The burning bedding then creates a large open-flame source igniting the mattress and creating dangerous flashover conditions, the point when the entire room and its contents are ignited simultaneously by radiant heat.

The proposed standard is designed to address the identified hazard of flashover resulting from open flame ignition of mattresses, usually from burning bedclothes. Under the proposed standard, mattresses and mattress/sets are exposed to gas burners, simulating burning bedclothes. Mattresses are required to meet two performance criteria that minimize the possibility of or delay flashover for a period of time. Mattresses must not exceed 200 kW peak heat release rate during the 30 minute test, and the total heat released must be less than 15 MJ for the first 10 minutes of the test.

2. *Comment.* Most commenters endorsed the direction of the mattress flammability test development research underway at NIST and encouraged the CPSC to issue a technologically practicable, reasonable standard. More recent commenters suggest California TB 603 be adopted as the federal standard.

Response. CPSC agrees with the technical approach suggested by the NIST research. A majority of the commenters agreed that preventing flashover from mattress fires would appropriately address the risk and that a full scale test with an ignition source comparable to burning bedclothes could achieve that objective. They strongly supported the NIST approach and discouraged the adoption of any existing standards.

Before California's adoption of TB 603, one commenter suggested using a modification of the small-scale British test, BS 5852, for smoldering and flaming ignition of upholstered furniture seating composites. However, a full-scale rather than small-scale test is generally considered the most reliable method for measuring performance of a product that contains many materials in a complex construction, such as a mattress. NIST research confirmed that a full-scale test of the mattress was needed to measure its performance when exposed to burning bedclothes or the representative set of gas burners. NIST's comprehensive, scientifically based research program was designed to address the open-flame ignition of mattresses and bedclothes under controlled conditions closely resembling those of real-life fire scenarios. The program focused on understanding the dynamics of fires involving mattress and bedclothing assemblies and on developing an appropriate and technologically practicable methodology to effectively measure the hazard.

NIST subsequently prepared a test method which the state of California incorporated into their TB 603,

''Requirements and Test Procedure for Resistance of a Mattress/Box Spring Set to a Large Open-Flame'' in 2004. The proposed standard is also based on the test method developed by NIST. Research on mattress and bedclothes fires conducted by NIST for CPSC and the industry provides the basis for the test criteria specified in the proposed standard. Manufacturers and suppliers have demonstrated that mattress designs complying with these performance criteria and suitable for the residential market can be produced.

3. *Comment.* One commenter requested the exclusion of certain product categories, such as mattresses used for therapeutic reasons and in healthcare environments, from an open flame standard.

Response. The proposed standard includes all mattresses, including those used in or as part of upholstered furniture items. ''One-of-a-kind'' mattresses and foundations are defined as physician prescribed mattresses to be used in connection with the treatment or management of a named individual's physical illness or injury. These products may be exempted from testing under the proposed standard in accordance with the rules established by the Commission. The proposed standard requires them to be permanently labeled with a warning statement indicating that the mattress and foundation have not been tested under the standard and may be subject to a large fire if exposed to an open flame.

4. *Comment.* In October 2003 the California Bureau of Home Furnishings (CBHF) urged the Commission to adopt their new standard, TB 603. Subsequently, a number of commenters expressed written support for adopting the TB 603 test methodology and performance criteria.

CBHF claimed that harmonization of California and federal standards would avoid a number of potential problems. They noted potential problems such as possible federal preemption and negative impacts on interstate commerce. Since TB 603 is a newly developed methodology, CBHF suggested that an inter-laboratory study be conducted before a potential adoption of TB 603 by CPSC. They noted that data obtained from an inter-laboratory study would verify the credibility of the test method.

Response. An inter-laboratory study was conducted with the support of SPSC, NIST, CBHF, and other participating laboratories to collect additional data and confirm the test protocol developed by NIST. A number of laboratories participated in the study to evaluate sensitivity, repeatability, and reproducibility of the test protocol. While the final report is not yet available, preliminary analysis of the data does not suggest either unreasonable sensitivities or practical limitations in the test protocol.

The Commission's proposed standard is similar to California's TB 603. The proposed standard and TB 603 use the same test method and limit the peak rate of heat release of a mattress or mattress/foundation to 200 kW. TB 603 also limits the size of the fire produced in the first 10 minutes of the test to 25 MJ. According to NIST research, untenable fire conditions could occur in a room from a fire of this size. Unlike TB 603, the staff's draft proposed standard requires that the mattress contribute no more than 15 MJ to the early fire scenario. This ensures that the mattress will have little involvement in the fire for the specified period of time. This lower limit partially compensates for the contribution of an uncertain combination of burning bedclothes on the bed, helping to preserve tenable conditions for egress.

5. *Comment.* Two commenters recognize the sophistication and complexity of the test method used in California TB 603 and potentially in a federal standard. They suggest that CPSC explore laboratory accreditation programs to insure test labs are properly qualified to conduct this complex test.

Response. The interlaboratory study may identify laboratory practices, equipment, and other related factors that must be controlled to ensure consistent and accurate test results. The report and findings of the study will be available to the public; and appropriate guidance can be provided to interested laboratories. While accrediting test laboratories is not a CPSC function, the Commission supports industry and commercial laboratory development of such a program.

6. *Comment.* A commenter expressed concerns about environmental impact and consumer sensitivity to flame retardants that may be used in mattresses, whether topically applied or integrated into fibers. The commenter recommends requiring a label that discloses the use of flame retardants in the mattress and provides a source of more specific information.

Response. Mattress fire performance can be improved by incorporating fire retardant chemicals into component materials or by using materials that are inherently fire resistant. Flame retardant chemicals are already widely used in other applications. More than one billion pounds of different flame retardant chemicals are currently used annually in the United States, including applications in many consumer products. There are also flame resistant (FR) materials that may be used for mattress barriers that have other consumer product applications. For example, melamine resins, which can be used in FR barriers, are also used in many laminated counter tops.

Based on available data, the Commission believes that there are available options for meeting the standard without posing an unacceptable health risk to consumers or significantly affecting the environment. Moreover, as described in section N of this preamble, even if a method used by some manufacturers to meet the standard were suspected of posing an unacceptable risk, there would be regulatory and other mechanisms that can be used to control that particular method. The staff is planning to conduct migration and exposure studies on various FR chemicals that could be used to meet the standard.

The commenter suggested labeling of chemically treated components as a possible requirement of the standard, to inform consumers of the materials used. The Commission questions whether such information would be of practical value to consumers. Simply stating that a mattress component has been chemically treated does not indicate to the consumer whether the mattress poses any health risk or not. The proposed standard requires manufacturers to maintain records specifying details of all materials, including flame retardant treatments applied and inherently flame resistant materials, used in each mattress design (prototype). This will allow identification of relevant mattresses and mattress/sets if an unacceptable risk is identified.

7. *Comment.* Another commenter recommended test provisions in the standard that address the long term durability of the flame retardant chemicals used in mattresses to ensure they continue to meet the fire performance requirements.

Response. It is expected that most manufacturers will use some kind of flame resistant barrier material to protect the mattress components with the greatest combustible fuel load from exposure to an open flame. Flame resistant barriers for mattresses may take several forms, including ticking fabrics, woven and non-woven interlinings, and battings. It is likely that these barriers will be made with an inherently flame resistant fiber (*e.g.*, para-aramid or fiberglass) or by treatment with flame retardant chemicals, many of which are incorporated within the fiber, foam, or

other material. At this point in the development of technologies that may be used to meet TB 603 or the proposed standard, the staff has seen no evidence that suggests that changes in these materials over time will occur or affect fire performance.

8. *Comment.* One commenter expressed concerns about the potentially severe economic impact of a federal regulation, similar to TB 603, on small businesses.

Response. The Commission acknowledges that the cost of testing, record keeping, and quality control/quality assurance programs could be disproportionately higher for small businesses. While these costs are estimated to be a little over one dollar per mattress per year for average-sized establishments, they could be substantially higher for some small mattress producers. The proposed standard, however, allows manufacturers to pool their prototype qualification and testing, and thus these costs can be mitigated. Moreover, if manufacturers produce mattress/set constructions for longer than a year or use a worst-case prototype to represent other mattress constructions, these costs will be lower. It is also expected that some barrier suppliers or independent laboratories would be willing to do the testing and quality control/assurance programs for small producers in exchange for a small charge. Therefore, the proposed standard is expected to minimize the impact on small businesses, while maintaining the benefits resulting from the standard.

The Commission is requesting comments from small businesses on the expected economic impact of the requirements of the proposed standard and the proposed effective date of 12 months after publication of the final rule in the **Federal Register**.

9. *Comment.* One commenter reported that some juvenile or crib mattresses, while meeting the 200 kW peak rate of heat release requirement, produce large amounts of flaming droplets that have the potential for spreading flames beyond the mattress. TB 603 does not address these flaming droplets.

Response. The objective of the proposed standard is to reduce the size of mattress/bedding fires and, thereby reduce the likelihood of or delay the development of flashover conditions in the room. Based on research conducted by NIST, performance criteria were developed to limit the size of the mattress fire and reduce the likelihood of it involving other objects in the room. The Commission believes that, while the proposed standard may be less effective in isolated circumstances, the objective of the standard can be met with the performance criteria specified: maximum 200 kW peak heat release rate during the 30-minute test and maximum 15 MJ total heat release in the first 10 minutes of the test. Laboratory tests of currently marketed crib mattresses of which the Commission is aware show unacceptable performance in one or both of these fire performance measures. Like full-size mattresses, these crib mattresses would also need to be improved to meet the requirements of the proposed standard.

10. *Comment.* One commenter suggested that a 60-minute test duration is needed in the standard to allow for fire and rescue workers to respond and help occupants escape.

The commenter notes that the longer test time will allow emergency responders to assist vulnerable citizens to escape fires involving mattresses and bedding. They report that response times can vary widely among local circumstances, from approximately 16 minutes to an hour or more.

Response. To estimate the proposed standard's potential effectiveness, the staff reviewed in-depth investigations that provided detailed information about fires that ignited mattresses and bedding, details of the occupants' situation, and occupants' actions during the fire. Most investigations also included documentation from the fire department that attended the fire. The in-depth investigations involved fires occurring during 1999–2004, and included a total of 195 deaths and 205 injuries. In some of these cases, even with traditional mattresses and bedding, other members of the household present at the time of the fire and emergency responders arriving within as little as 5 minutes were able to rescue victims.

With improved mattresses, those complying with the 30-minute test specified in the proposed standard, the fire growth is slowed considerably and flashover conditions are delayed, making successful rescue efforts of family members and emergency responders more likely. The Commission estimates that 310 to 330 deaths and 1,660 to 1,780 injuries resulting from mattress and bedding fires could be prevented annually by the proposed standard. A maximum additional 80 deaths and 280 injuries, considered addressable by the draft standard, might be further reduced with a 60-minute test. However, actual reductions would likely be much lower. This is because those considered likely to die or be injured in conditions associated with a proposed 30 minute test are those incapable of acting on their own and with no potential rescuer in the occupancy. Even with more time, in such circumstances, the fire continues to progress, and the chances of rescue are unpredictable.

Based on the preliminary regulatory analysis, the expected benefits of the proposed standard, incorporating a 30-minute test, are greater than the costs. The regulatory analysis also considered alternatives to the proposed standard, including a 60-minute test; neither this nor the other alternatives was shown to increase expected net benefits.

11. *Comment.* A few commenters expressed the need to maintain protection from the threat from cigarette ignitions while considering an open flame standard.

Response. The standard that addresses cigarette ignition resistance, the Standard for the Flammability of Mattresses and Mattress Pads, codified as 16 CFR part 1632, remains in effect unless it is modified or revoked by the Commission in a separate rulemaking proceeding. If such a rulemaking occurred, the Commission would thoroughly evaluate the need for maintaining both an open flame standard and the standard for cigarette ignition resistance.

Bedclothes Comments

Comment. Most of the commenters refer to the impact of burning bedclothes on mattress/bedding fires and express opinions on the potential scope of an open flame mattress standard. Some commenters urge the Commission to limit the scope of a standard to mattresses while opposing commenters recommend that either the scope be expanded to incorporate bedclothes or bedclothes should have ignition standards of their own.

Commenters in support of regulating bedclothes believe that studying the impact of burning bedclothes is appropriate and would assist in the development of better performing, safer products. They note that bedclothes contribute to the intensity and spread of the original ignition source often involved in mattress fires. Therefore, burning bedclothes become a significant ignition source to the mattress and impact the burning characteristics of the mattress and foundation. They further note that bedclothes alone have been shown to generate a fire large enough to pose a hazard and can alone be the cause of ignition to nearby items. According to these commenters, improving the flammability of certain bedding items, such as filled items, is economically feasible. One commenter claims that mattress fires cannot be adequately addressed without also

considering the flammability of bedclothes.

In support of limiting the scope to mattresses and not regulating bedclothes, some commenters identify bedding items as an uncontrolled variable. They claim that there is no way to predict the type of bedclothes that may be involved in an incident at any given time; the number and type of items used by consumers is indefinable and consumers select items based on season, fashion, and climate. In addition, according to these commenters, there is no objective method to determine if consumers would use regulated bedclothes; there is little data to suggest that regulating some selected items will have an impact on the hazard; and flammability performance should not be based on what consumers may or may not use as bedclothes. These commenters also state that most U.S. textile manufacturers already voluntarily test for small open flame ignition of bedclothes using ASTM voluntary test methods. They assert that the additional burden and expense of any regulation on bedclothes would be substantial and could not be justified.

Response. The Commission notes that bedclothes substantially contribute to the complexity and magnitude of the mattress fire hazard. In laboratory tests peak heat release rates as high as 800 kW were observed from some larger bedclothes items. This presents a clear risk of flashover; and this heat release rate is much higher than that allowed for a mattress/set in the proposed standard. The extent to which bedclothes can be modified in a manner that is technologically practicable and economically feasible is unclear at this time. However, reducing the contribution of certain high fuel load bedding items to a mattress/bedding fire is desirable. The Commission is issuing an ANPR for a bedclothes flammability standard. The Commission believes that such a standard could increase the likelihood that mattress/bedding fire losses are effectively reduced.

K. Preliminary Regulatory Analysis

The Commission has preliminarily determined to issue a rule establishing a flammability standard addressing the open flame ignition of mattresses. Section 4(i) of the FFA requires that the Commission prepare a preliminary regulatory analysis for this action and that it be published with the proposed rule. 15 U.S.C. 1193(i). The following discussion, extracted from the staff's memorandum titled ''Preliminary Regulatory Analysis of a Draft Proposed Standard to Address Open-Flame Ignitions of Mattresses,'' addresses this requirement. [8]

1. Introduction

There were an estimated 18,900 fires where the first item ignited was mattress/bedding in 1998 (the last year for which detailed data comparable to previous years are available). These fires caused an estimated 2,260 civilian injuries, 410 deaths, and $255.4 million in property losses. As discussed elsewhere in this document, NIST has conducted extensive research and developed a test methodology to test open flame ignition of mattresses.

California Technical Bulletin (TB) 603, which is based on the use of NIST test burners designed to mimic the local thermal insult (heat flux levels and duration) imposed by burning bedclothes, is scheduled to become effective in California January 1, 2005. TB 603 requires all mattress/foundation sets, mattresses intended to be used without a foundation, and futons to meet the following pass/fail criteria: (1) The peak heat release rate (''PHRR'') does not exceed 200 kW during the 30 minute test, and (2) the total heat release does not exceed 25 mega joules (MJ) in the first 10 minutes of the test.

Large mattress manufacturers may eventually produce TB 603-compliant mattresses for sale nationwide, because of legal liability and production logistics. In the short-run, however, some manufacturers may limit their sale of TB 603-complying mattresses to California. Sealy's president and CEO said that ''[they] plan to be ready by the end of this year [2004] if a national retailer wants the same product'' with fire resistant technology, but will not convert all production by January 2005 (Furniture Today, March, 10, 2004). Smaller producers are more likely to wait until they have a better idea of enforcement efforts in California, or until a federal standard is adopted. The mattress industry, represented by ISPA, supports the development of a mandatory federal standard (Furniture Today, May, 10, 2004). A Federal standard would eliminate the uncertainty that may result from having different flammability standards for different states.

2. The Proposed Standard: Scope and Testing Provisions

The proposed standard will apply to all mattresses, where the term mattress means a ticking (*i.e.*, an outer layer of fabric) filled with a resilient material used alone or in combination with other products intended or promoted for sleeping upon. This definition is discussed further in section G.2. above.

A typical innerspring mattress construction might include ticking; binding tape fabric; quilt cushioning with one or more separate layers; quilt backing fabric; thread; cushioning with one or more separate layers; flanging; spring insulator pad; spring unit; and side (border) panels. Options for meeting the standard include the use of one or a combination of the following: fire resistant ticking; chemically treated or otherwise fire resistant filling products; or a fire blocking barrier (either a sheet style barrier, sometimes called a fabric barrier, or a high-loft barrier, sometimes called a fiber barrier). The fire blocking barrier is placed either directly between the exterior cover fabric of the product and the first layer of cushioning materials, or beneath one or more ''sacrificial'' layers that can burn without reaching the proposed heat release constraints.

There are already over twenty different vendors of fire resistant materials associated with the production of mattresses, including barriers, ticking, foam, tape, and thread. These materials include chemically treated cotton, rayon, and/or polyester, melamine, modacrylic, fiberglass, aramid (Kevlar''), or some combination of them. The cost of using sheet barriers is higher than using high-loft barriers, since sheet barriers are thin and therefore could not be substituted for an existing foam or cushioning layer. There is also concern that some sheet barriers, unlike high-loft barriers, may reduce the comfort of the sleeping surface.

To qualify a prototype, three mattresses/sets must be tested and must pass the test requirements. To obtain a passing result, each mattress/set must pass a 30 minute test, where the PHRR does not exceed 200 kW and the total heat release does not exceed 15 MJ in the first 10 minutes of the test. If any of the sets fail, the problem must be corrected, the prototype must be retested and pass the test (in triplicate). Manufacturers may sell any mattress/set based on a qualified prototype. Manufacturers may also sell a mattress/set based on a prototype that has not been tested if that prototype differs from a qualified prototype only with respect to (1) mattress/foundation size; (2) ticking, unless the ticking of the qualified prototype has characteristics designed to improve performance on the burn test; and/or (3) any component, material, or method of construction that the manufacturer can demonstrate, on an objectively reasonable basis, will not cause the prototype to exceed the test criteria specified above.

If one or more establishments (plants within the same firm) or independent

firms choose to ''pool'' prototypes, then each pooling plant or firm is required to test one mattress/set for confirmation testing. If that set fails, then the plant or firm will need to test another mattress/set after correcting its production to make sure that it is identical to the original prototype.

A pooling firm may sell other mattresses that have not been tested by the pooling firm if they differ from the pooled prototype only with respect to (1) mattress/set size; (2) ticking, unless the ticking of the qualified prototype has characteristics designed to improve performance on the burn test; and/or (3) any component, material, or method of construction that the manufacturer can demonstrate, on an objectively reasonable basis, will not cause the prototype to exceed the test criteria specified above.

3. Products and Industries Potentially Affected

According to ISPA, the mattress producers' trade organization, the top four producers of mattresses account for almost sixty percent of total U.S. production. In total, there are 639 establishments (as of 2001) that produce mattresses in the U.S., using the U.S. Department of Commerce NAICS (North American Industry Classification System) Code 33791 for mattresses. The top four producers account for about half of the number of all these establishments. The number of establishments has been declining over time due to mergers and buy-outs. Total employment in the industry, using the NAICS Code 33791, was 25,500 workers in 2001.

The mattress manufacturing industry has three key supplying industries: spring and wire product manufacturing, broad-woven fabric mills, and foam products manufacturing. Depending on the type of fire resistant barrier chosen by different manufacturers, the demand for foam padding for mattresses might decline if it were replaced by the high-loft barrier in the construction of the mattress and foundation. This would be offset by an increase in the demand for the high-loft barrier. If sheet barriers were chosen by some mattress producers, then sales of, and employment by, the sheet barrier suppliers would increase. Since the sheet barriers would not replace other inputs, there would most likely be no offsetting effect on other industries. Fiberglass, melamine, and aramid producers may also be affected to the extent that they are used to produce fire resistant materials used in mattress production.

Manufacturers of bedclothes may also be affected by the proposed standard. Sales of bedclothes may increase or decrease based on whether consumers view bedclothes as complements or substitutes for a new mattress/set (complements are goods generally consumed together, substitutes generally substitute for each other). For example, if people tend to buy all parts of a new bed (mattress, foundation, and bedclothes consisting of a comforter, pillows, and sheets) at the same time, then an increase in the quantity of mattresses sold would cause an increase in sales of bedclothes. If, alternatively, people tend to have a fixed budget from which to buy all mattresses and bedding items, then an increase in the quantity of mattresses sold would lead to a decrease in sales of bedclothes. Also, if the decision to buy a new mattress (or mattress/set) involves buying a mattress that is much thicker than the one currently in use, then consumers will most likely buy new sheets (and possibly matching pillowcases and other bedclothes items) to fit the new thicker mattress.

If the cost increase is relatively small or there is no resulting increase in the price of a mattress/set, then the demand for bedclothes will only be affected if consumers place a higher value on the safer mattress and replace their current mattress sooner than they would have with no standard in place. An increased demand for the safer (and thicker, if the current mattress is relatively old) mattress will likely result in an increased demand for sheets that fit the newer mattresses. This effect, however, is not directly resulting from the adoption of the proposed standard since the thickness of the mattress need not be increased by the presence of either type of barrier. It is the result of the increased utility some consumers may derive from the safer mattress and the consequent increase in demand for bedclothes. The increased demand for safer mattresses would most probably lead to an increase in sales and employment in the spring and wire products, broad-woven fabric, and foam products industries, as well as in the mattress and bedclothes industries.

Other producers that could potentially be affected, if the price change associated with producing compliant mattresses is significant, are those of other substitute products, like airbeds, waterbeds, * * * etc. that contain no upholstered material and would, therefore, not be covered by the proposed standard. Their sales may increase as a proportion of total bedding products.

4. Characteristics of Mattresses Used in U.S. Households

The total number of U.S. conventional mattress shipments was 21.5 million in 2002 and is estimated to be 22.1 in 2003 and 22.8 in 2004. Mattress shipments have grown at an average rate of three percent over the period 1981 to 2004. Unconventional mattresses (including futons; crib mattresses; juvenile mattresses; sleep sofa inserts; and hybrid water mattresses) are estimated to be about ten percent of the total market. This yields an estimated total number of mattresses produced domestically of 25.3 million in 2004. The value of mattress and foundation shipments in 2002, according to ISPA, was $3.26 and $1.51 billion respectively.

The CPSC Product Population Model (PPM) estimate of the number of mattresses in use in different years is based on available annual sales data and an estimate of the average product life of a mattress. Industry representatives assert that the average consumer replaces a mattress/set after ten years. A 1996 CPSC market study estimated the average expected life of a mattress to be 14 years. The PPM estimates the number of (conventional and non-conventional) mattresses in use in 2004 to be 233 million mattresses, using a 10-year average product life, and 302.6 million mattresses, using a 14-year average product life. These two numbers are later used to estimate the pre-standard baseline risk and the expected benefits of the proposed standard.

This analysis focuses principally on queen-size mattresses because they are the most commonly used. In 2002 queen-size mattresses were used by 34 percent of U.S. consumers. Following the queen-size are the sizes: Twin and Twin XL (31.2 percent), Full and Full XL (21 percent), King and California King (11 percent), and all other (2.6 percent). ISPA data reflect that the average size of a mattress is increasing. The average manufacturing price in 2002 was $152 for a mattress of average size and $86 for a foundation of average size. Hence the average manufacturing price of a mattress/set was about $238 in 2002.

There are no readily available data on average retail prices for mattress/foundation sets by size. ISPA, however, reports that mattress/foundation sets selling for under $500 represent 40.7 percent of the market. Mattress/foundation sets selling for between $500 and $1000 represent 39.2 percent of the market.

5. Trends in Mattress/Bedding Residential Fires, Deaths, Injuries, and Property Losses

Open-Flame Ignition. The staff estimates average annual mattress/bedding fires from open-flame ignitions (including candles, matches and lighters) to have been 8,367 and 6,367 over the 1993–95 and 1996–98 periods respectively. This represents a reduction of 23.9 percent. The resulting average mattress/bedding deaths, injuries, and property losses from open-flame ignitions have decreased by 28.2 percent, 22.1 percent, and 5.6 percent respectively, over the 1993 to 1998 period. When adjusted for inflation, the decrease in the value of property losses becomes 37.7 percent.

Smoking Material Ignition. The staff estimates average annual mattress/bedding fires from smoking material ignition (including cigarettes, cigars, and pipes) to have been 7,733 and 6,067 over the 1993–95 and 1996–98 periods respectively. This represents a reduction of 21.6 percent over the 1993 to 1998 period. Average annual deaths, injuries, and property losses due to mattress/bedding smoking material ignitions have decreased by 4.7 percent, 19.7 percent, and 9.7 percent, respectively, over the same period. When adjusted for inflation, the decrease in the value of property losses becomes 40.4 percent.

Other Ignition Sources. The staff estimates average annual mattress/bedding fires from other ignition sources (including sparks, embers, or flames escaping from fueled equipment, arcs or sparks from electric equipment, small torches, hot embers, and fireworks, heat escaping from fueled equipment, molten material, short circuit arc, and heat overloaded equipment) to have been 8,633 and 7,767 over the 1993–95 and 1996–98 periods respectively. This represents a reduction of 10 percent over the 1993 to 1998 period. Average annual injuries and inflation-adjusted property losses have decreased by 13.8 percent and 38.7 percent respectively. Average annual deaths increased by 51.7 percent (from 97 to 147). This increase offsets the decrease in deaths resulting from open-flame and smoking material ignition fires. The annual average number of deaths from all ignition sources remained unchanged over the period, equal to 510.

6. Expected Benefits of the Proposed Standard

The expected benefits of the proposed standard are estimated as reductions in the baseline risk of death and injury from all mattress fires, based on a CPSC staff study of fire investigations from 1999–2004. Risk reductions are then calculated on a per-mattress-in-use basis based on estimates of the number of mattresses in use. The monetary value of expected benefits per mattress is derived using current (*i.e.*, 2004) estimates for the value of a statistical life and the average cost of a mattress fire injury. To derive the monetary value of expected benefits over the life of a mattress, the expected annual benefits are discounted (using a three percent discount rate), and then summed over the expected life of the mattress. The analysis considers mattress lives of 10 and 14 years.

The potential benefits of the proposed standard consist of the reduction in deaths, injuries, and property damage that would result. Since the objective of the proposed standard is to reduce the likelihood of flashover or increase the time before flashover occurs, and not to reduce fires, changes in property losses associated with the proposed standard are hard to quantify. Property losses are expected to decline but the extent of the decline cannot be quantified. Consequently, for purposes of this analysis, no reduction in property losses is assumed. That is, all expected benefits from the proposed standard are in the form of prevented deaths and injuries. This underestimates net benefits, since there will likely be some benefits from reduced property losses.

The proposed standard is expected to reduce the likelihood of flashover resulting from fires started by smoking materials or other ignition sources, as well as those started by open-flame ignition. Fires, injuries, and property losses resulting from smoking material ignition and other ignitions, and deaths from smoking material ignition are lower for the 1996–98 period than the 1993–95 period. (Deaths from other ignition sources are more than 50 percent higher). Any additional reduction in these figures due to the proposed open-flame ignition standard will translate into societal benefits, as will be discussed in the benefit-cost analysis (Section 8).

Estimates of the effectiveness of the proposed standard are based on a CPSC staff evaluation of in-depth investigation reports of fires (including details of the occupants' situations and actions during the fire) occurring in 1999–2004 in which a mattress or bedding was the first item to ignite, the fire was of the type considered addressable by the proposed standard, and a civilian death or injury resulted. Most of the investigations also included documentation from the fire department that attended the fire. Some incident reports were initiated from death certificates with follow-up documentation from the fire department. This resulted in a total of 195 deaths and 205 injuries in the investigations to be evaluated. The distribution of mattress ignition sources was not representative of all fires involving mattresses and thus the data were weighted to match the NFIRS-based national fire data distributions.

Evaluations of the fire incidents by CPSC staff reviewers used the results of NIST testing (Ohlemiller, 2004; Ohlemiller and Gann, 2003; Ohlemiller and Gann, 2002) conducted to assess the hazard produced from burning mattresses and bedclothes. Specifically, the evaluations were based on the expectation that occupants in bed when the fire ignited but able to escape the burning bedclothes in the first three to five minutes faced a minimal hazard. Occupants in direct contact with burning bedclothes for a longer period (5 to 10 minutes) would be subject to potentially hazardous levels of heat release. If the burning bedclothes did not ignite other non-bedding items or produce flashover at this time, heat release would subside temporarily and then begin to increase as the involvement of the mattress increased.

These conditions would allow occupants 10 to 15 minutes to escape the room of origin before the situation in the room would become untenable. Since the proposed standard is expected to slow the rate of fire spread and hence increase escape time, assuming that bedclothes do not contribute enough heat to pose a hazardous condition, it was assumed that no deaths would occur among people who were outside the room of origin at the time of ignition, unless they entered the room later or were incapable of exiting on their own. The analysis focused on reduction of deaths and injuries because the proposed standard is designed to limit fire intensity and spread rather than prevent ignition.

Each investigation was evaluated by CPSC staff reviewers to identify the features related to the occurrence of a death or injury once the fire was ignited. These included casualty age, casualty location when the fire started (at the point of ignition, in the room of origin but not at the point of ignition, or outside the room of origin), whether the casualty was asleep, or suffered from additional conditions likely to increase the time needed to escape, whether the casualty engaged in fighting the fire, and whether a rescuer was present. All of these conditions were used to determine a range for the likelihood that each individual death or injury would have

been prevented had the draft proposed standard been in effect. Percentage reductions of deaths (injuries) within subcategories of heat source and age group were applied to equivalent subcategories of the national estimates based on the NFIRS and NFPA data for 1995–1999. The estimated reductions per category were summed and the overall percentage reductions were calculated as the percent of addressable deaths (or injuries) that would have been prevented if the likelihood of flashover were reduced in the first 30 minutes and victims had 10 to 15 minutes of escape time.

The staff indicates that the proposed standard is expected to reduce all addressable deaths from mattress/bedding fires by 80 to 86 percent and reduce all addressable injuries from mattress/bedding fires by 86 to 92 percent. The results vary only slightly by source of ignition. These estimated effectiveness percentages result in the prevention of an estimated 310 to 330 deaths and 1660 to 1780 injuries annually, for the 1998–2002 period.

The staff's analysis presents the estimated annual deaths and injuries that are expected to be prevented by the proposed standard, based on average figures for 1998–2002. For purposes of this analysis, it is assumed that the annual deaths and injuries prevented by the proposed standard equal the average annual deaths and injuries prevented for the 1998–2002 period. The analysis is conducted as if the standard went into effect in 2004. All dollar estimates are based on constant 2004 dollars. A discount rate of 3 percent and average expected lives of a mattress of 10 and 14 years are also assumed.

The estimated ranges of deaths and injuries prevented are calculated by applying the range of percent reductions to average addressable deaths and injuries for the period 1998–2002. Staff's analysis also presents the risk reduction in deaths and injuries that would result from the proposed standard (per million mattresses). Based on the estimated number of mattresses in use (described in Section 4) and an average expected life of 10 years, the annual reduction in the risk of death equals 1.33 deaths per million mattresses (310 deaths divided by the estimated 233 million mattresses in use in 2004) to 1.42 per million mattresses (330 deaths / 233 million mattresses). The estimated reduction in the risk of injury, similarly calculated, equals 7.12 to 7.64 injuries per million mattresses for an estimated 10-year life of a mattress. The estimated risk reductions for an estimated 14-year life of a mattress are 1.02 to 1.09 deaths and 5.49 to 5.88 injuries per million mattresses.

Annual risk reductions resulting from the proposed standard are used to derive the monetary benefits from reduced deaths and injuries. The estimated reduction in the risk of death is multiplied by the value of a statistical life (and divided by a million) to derive a first-year monetary estimate for the range of benefits from lives saved per mattress. Based on the existing literature, a value of a statistical life of five million dollars is assumed (Viscusi, 1993). The estimated reduction in the risk of injury is similarly used to derive the range of first-year monetary benefits from injuries prevented. The benefits from preventing an injury (the cost of an injury) in 2004 are estimated to average about $179,300, based on Miller *et. al.* (1993). The first-year benefits associated with preventing deaths and injuries equal $7.93 to $8.45 for an estimated mattress life of 10 years and $6.11 to $6.51 for an estimated mattress life of 14 years.

Lifetime benefits are derived by projecting annual benefits for the life of the mattress and summing the discounted (at a rate of 3 percent) stream of annual benefits (measured in constant dollars). The number of mattresses in use is projected to grow at a rate of zero to three percent, based on the average growth rate for the 1981–2002 period. Since the number of deaths and injuries are implicitly assumed to remain constant over time, a positive growth rate of mattresses in use implies a declining risk over time. The lower end of the ranges for estimated (10 and 14 years) lifetime benefits correspond to a 3 percent projected growth rate and the lower end of the effectiveness ranges. The upper end of the ranges for estimated (10 and 14 years) lifetime benefits correspond to a zero percent projected growth rate and the upper end of the effectiveness ranges. For an expected mattress life of 10 years, the resulting expected lifetime benefits of saved lives associated with the proposed standard equal $51.70 to $62.22 per mattress. The corresponding benefits of prevented injuries equal $9.93 to $12.03. Hence, for an expected mattress life of 10 years, the expected total lifetime benefits of a compliant mattress equal $61.66 to $74.25. For an expected mattress life of 14 years, total benefits equal $59.88 to $75.71 per mattress. The sensitivity analysis section below examines how the results might change when a discount rate of seven percent is used.

7. Expected Costs of the Proposed Standard

This section presents the expected resource costs associated with the proposed standard. Resource costs are costs that reflect the use of a resource that would have been available for other uses had it not been used in conjunction with the production of mattresses compliant with the proposed standard. These costs include material and labor costs; testing costs; costs to wholesalers, distributors, and retailers; costs of producers' information collection and record keeping; costs of quality control/quality assurance programs; and compliance and enforcement costs. The effect on retail prices will be discussed in Section 8.

Material and Labor Costs. To comply with the proposed standard, the construction of most mattress/sets will include a barrier technology with improved fire performance. This barrier may be thick (high-loft) or thin (sheet). High-loft barriers are generally used to replace some of the existing non-woven fiber, foam, and/or batting material, leading to a smaller increase in costs than sheet barriers, which constitute an addition to production materials (and costs).

According to several barrier producers and mattress manufacturers, the price of a high-loft barrier that would make a mattress comply with the proposed standard, defined to have a width of 88 to 92 inches, is $3.00 to $5.00 per linear yard. The high-loft barrier replaces the currently-used polyester batting, which costs an average of $0.50 to $1.70 per linear yard. Hence, the net increase in the cost attributed to the use of the high-loft barrier is $1.30 to $4.50 per linear yard, which translates to a net increase in barrier-related manufacturing costs of $7.80 to $27.00 for a queen-size mattress/set.[4] The queen-size is used for all the cost estimates, because it is the mode size, used by 34 percent of consumers in 2002.

According to several barrier producers and mattress manufacturers, the price of a sheet barrier that would make a mattress comply with the proposed standard is $4.00 to $6.00 per linear yard. Because of its different texture, the sheet barrier would generally not replace any of the materials being used in the construction of the mattress/set.[5]

[4] This calculation is based on the assumption that a queen-size mattress/set requires six linear yards of the barrier mateiral to be used in the two (top and bottom) panels of the mattress and the side panels of both the mattress and foundation. Some producers are able to use less than six linear yards, which reduces their cost per queen mattress/set.

[5] The only exception to this might involve using a sheet barrier in the side panel of the mattress and

This translates to $24.00 to $36.00 for a queen-size mattress/set. The large difference in the net cost of the two barrier types suggests that if a barrier's fire performance is not a function of its type, most manufacturers will use high-loft barriers, the less costly alternative. A large mattress manufacturer also indicated that mattresses produced with sheet barriers in the top panel of the mattress (as opposed to the side panels) may be less comfortable.

In addition to the increase in material costs due to the use of a barrier, costs will increase due to the use of fire-resistant (FR) thread for tape stitching. According to several thread producers, the cost of FR thread is $0.41 to $0.60 per queen-size mattress/set. Given that the cost of nylon (non-FR) thread is about $0.10 per queen-size mattress/set, the net increase in costs per queen-size mattress/set due to the use of FR thread is $0.31 to $0.50.

Costs may also increase due to slightly reduced labor productivity. Based on industry estimates of an average of two labor hours for the production of a queen-size mattress/set, and a 10 percent reduction in labor productivity and an industry average hourly wage rate of $11.50, the cost increase due to reduced labor productivity is about $2.30.

The increase in the materials and labor costs of a mattress, is thus equal to $10.41 ($7.80 barrier cost + $0.31 thread cost + $2.30 labor cost) to $29.80 ($27 barrier cost + $0.50 thread cost + $2.30 labor cost) for a high-loft barrier and $26.61 ($24.00 barrier cost + $0.31 thread cost + $2.30 labor cost) to $38.80 ($36 barrier cost + $0.50 thread cost + $2.30 additional labor cost) for a sheet barrier.[6] Various types of high-loft and sheet barriers are widely available for sale and therefore it is expected that those whose prices are at the upper end of the range will either not be produced (because mattress manufacturers will not buy them) or their prices will drop (so that they can compete with other barriers available for sale). Hence the total materials and labor costs will most likely be closer to the lower end of the estimated range.

Costs of Prototype and Confirmation Testing. Each mattress/set prototype is required to be tested in triplicate for prototype qualification. According to industry representatives, the cost of testing per twin-size mattress/set may be about $500: the sum of the average cost of the materials and shipping ($100) and the cost of the use of the lab ($400). Hence, the cost of testing three mattresses/sets for prototype qualification equals $1500. Additionally, if some mattress/set prototypes do not pass the first time, then the cost will be higher, because additional tests will be done after action is taken to improve the resistance of the prototype. If 10 percent of mattresses are retested, then the average cost of testing a prototype would be 10 percent higher, or $1650. This cost is assumed to be incurred no more than once per establishment for each prototype. It is expected that a qualified prototype will be used to represent a mattress construction (*e.g.*, single-sided pillow top) with all other prototypes using the same construction (with different size and different ticking materials) being based on the qualified prototype. If companies pool their prototype definitions across different establishments or different companies, testing costs would be smaller as all but one of the firms/establishments producing to the specification of a pooled prototype will burn one mattress (for the confirmation test) instead of three (for the prototype test). The probability of a mattress failing a confirmation test is small. Therefore, it is expected that the average cost of testing per mattress will be lower for firms and/or establishments that pool their results than for those that do not.

If manufacturers test every mattress construction (*e.g.*, single-sided pillow top, double-sided pillow-top, tight-top, euro-top, * * * etc.), which is estimated, based on conversations with manufacturers, to average about twenty per manufacturer, for every establishment in a given year, then their average testing cost per mattress would approximately equal 92.5 cents ($1650 × 20 constructions × 639 establishments/ 22.8 million conventional mattresses) per mattress for the first year of production. If manufacturers use a qualified prototype of the least fire-resistant mattress/set construction (''worst case'') to represent other mattress/set constructions, then the average cost of testing per mattress for the first year of production will be reduced. Pooling testing results across establishments and/or firms will further reduce the average cost of testing per mattress. On an annual basis testing costs will be further reduced because prototypes need only be tested in the year they are first developed.

Cost of Information Collection and Record Keeping. In addition to prototype testing, the proposed standard will require detailed documentation of all tests performed and their results including video or pictures; prototype or production identification number; date and time of test; and name and location of testing facility; test room conditions; and test data for as long as the prototype is in production and for three years after its production ceases. Manufacturers are also required to keep records of a unique identification number for the qualified prototype and a list of the unique identification numbers of each prototype based on the qualified prototype and a description of the materials substituted and/or the size change. Moreover, they are required to document the name and supplier of each material used in construction of a prototype and keep physical samples of the material. Additionally, they are required to identify the details of the application of any fire retardant treatments and/or inherently fire resistant fibers employed relative to mattress components. This documentation is in addition to documentation already conducted by mattress manufacturers in their efforts to meet the cigarette standard. Detailed testing documentation will be done by the test lab and is included in the estimated cost of testing. Based on CPSC Office of Compliance staff estimates, all requirements of the proposed standard are expected to cost an establishment about 110 minutes, or 1.3 hours, per qualified prototype. Assuming that every establishment will produce 20 different qualified prototypes, the increase in record keeping costs is about $935 (110 minutes × 20 qualified prototypes × $25.50 in average civilian workers' compensation per hour) per establishment per year. (Note that pooling among establishments or using a qualified prototype for longer than one year will reduce this estimate.) This translates to an average cost of 2.6 cents per mattress for an average establishment, with average output of 35,681 conventional mattresses.

Cost of Quality Control/Quality Assurance Programs. To ensure that all mattresses are produced to the prototype specification across all factories and over the years for which a production line exists, mattress

foundation. Because the existence of cushioning along the side of the mattress and foundation would probably not be noticed or missed by consumers, substitution of the sheet barrier for the material currently being used in the side panel may be implemented to reduce the cost of using the sheet barrier. The side panel is small, relative to the size of the entire surface area of a mattress/set, and its possibly different construction is therefore not included in the cost calculation. This leads to a slight over-estimation of the cost of the sheet barrier and consequently the relative cost of using a sheet instead of a high-loft barrier.

[6] Some producers are also using an FR mattress edge binding tape, which costs an average of $2.52 per mattress, while a non-FR tape costs an average of $1.68. This makes the net increase in costs, due to using FR edge binding tape, equal to $0.84. This cost is not added to the total production costs, because it is not required for the mattress to pass the burn test.

manufacturers will need a thorough well-documented quality control/assurance program. The top 12 mattress producers (with a market share of almost 80 percent) have existing quality control programs which could be modified to fit the new standard with minimal additional costs. Smaller producers, whose quality control programs are less detailed or non-existent, will incur some incremental costs as a result of the proposed standard. These incremental costs will be small for each manufacturer and less when measured per mattress. (See the section on impact of the proposed standard on small businesses for a description of their cost of quality control and quality assurance programs.)

Additionally, although the proposed standard does not require production testing, it encourages random production testing to assure manufacturers that their mattresses continue to meet the requirements of the rule, as a possible component of the quality control/quality assurance program. Assuming that an average of 3 mattress/foundation constructions will be tested per establishment per year yields an estimated cost of production testing of about $1500. Based on this assumption, the estimated cost of testing mattress/foundation sets for quality assurance purposes, therefore, equals 4.2 cents per mattress ($1500/35,681) for an average establishment.

The labor needed to meet the quality assurance measures required by the standard is estimated by CPSC Office of Compliance staff to be 224 minutes per establishment per prototype per year. Assuming that every establishment will produce 20 qualified prototypes, the increase in labor costs associated with quality assurance requirements of the proposed standard is about $1904 (224 minutes × 20 qualified prototypes × $25.50 average civilian workers' compensation per hour) per establishment per year. (Note that pooling among establishments or using a qualified prototype for longer than one year will reduce this estimate.) This yields an average cost of 5.3 cents per mattress for an average establishment, with average output of 35,681 mattresses. Hence total costs of quality assurance/quality control programs may average about 9.5 cents (4.2 + 5.3) per conventional mattress per year.

Costs to Wholesalers, Distributors, and Retailers. An added cost of the proposed standard is the increase in costs to wholesalers, distributors, and retailers in the form of additional storage, transportation, and inventory financing costs. Since a mattress complying with the proposed standard will not be bigger than a similar mattress produced before the standard becomes effective, storage and transportation costs are not expected to increase. Inventory financing costs will increase by the average cost of borrowing money, applied to the wholesale price of a mattress over the average inventory holding time period. Since most mattress producers use just-in-time production and have small inventories, this additional cost will probably not exceed ten percent of the increase in production cost (which is the sum of material, labor, testing, record keeping, and quality assurance costs). A ten percent mark-up is, therefore, being used to measure the cost to wholesalers, distributors, and retailers. This yields a resource cost to wholesalers, distributors, and retailers equal to $1.15 to $3.98 per mattress/set. Retail prices may increase by more than the ten percent mark-up. Section 8 discusses the impact of the proposed standard on retail prices of mattresses.

Costs of Compliance and Enforcement. Compliance and enforcement costs refer to the costs incurred by CPSC to ensure that manufacturers are complying with the proposed standard. Based on past experience with the existing mattress standard, the estimated CPSC inspection time spent per location (establishment) equals 33 hours for inspection and 6 hours for sample collection. This yields a cost per inspection of about $1,664.52 (39 hours × $42.68, the average wage rate for CPSC inspectors). Additionally, compliance officers spend an average of 20 hours per case, making their cost equal to $1,032.80 (20 hours × $51.64, the average hourly wage rate for compliance officers). This yields an average compliance and enforcement total labor cost of $2,697.32 per inspected establishment per year.

It should be noted that the expected cost per establishment, if less than one hundred percent of establishments are inspected every year, equals the cost per inspected establishment times the probability that a given establishment will be inspected. Though the probability that a given establishment will be inspected in a given year is not known, assuming that a third of all establishments will be inspected (*i.e.*, about 213 establishments) yields a compliance and enforcement total expected labor cost of $899.11 ($2,697.32 × (⅓)) per establishment per year.

In addition to labor costs, CPSC will incur testing costs. It should be noted that the decision to collect samples after an inspection visit is made at the discretion of the investigator and, therefore an accurate assumption about the number of samples collected and sent for a burn test cannot be made. If, based on inspection, samples from 10 percent of all inspected establishments were to be collected and sent to a lab for a burn test, and if samples representing 5 qualified prototypes are taken from each of these establishments, then the total cost of CPSC testing will be $157,500 (5 qualified prototypes × $1,500 (the cost of testing up to 3 mattresses for each qualified prototype) × 21 (10 percent of 213 inspected establishments)). These assumptions about frequency of testing yield an expected cost of testing per establishment of $246.48 ($157,500/639).

Therefore the expected total CPSC wage and testing costs associated with the proposed standard per establishment per year equal $1,145.59 ($899.11 + $246.48). With an average production of 35,681 mattresses per establishment (22.8 million mattresses divided by 639 establishments), the average CPSC wage and testing costs equal 3.2 cents per mattress ($1,145.59/35,681). These costs are expected to decrease over time as manufacturers learn the requirements of the proposed standard.

Total Resource Costs. Therefore total resource costs (including material costs, labor costs, costs of prototype and confirmation testing, paperwork collection and record keeping costs, costs of quality control/quality assurance programs, production testing costs, costs to wholesalers, distributors, and retailers, and costs of compliance and enforcement) are estimated to range from $12.63 to $43.86 per mattress. This range includes both the high-loft and sheet barriers. The section on the impact of the proposed standard on small businesses and other small entities discusses how costs of testing and quality control/quality assurance programs may differ for small businesses and strategies that small manufacturers might adopt to reduce these costs.

Projected Future Costs. It is possible that costs associated with the standard will decline over time. A supplier of fire resistant barriers predicts that the price of the barriers will decline by 40 percent in the next two years, due to decreased uncertainty and increased competition. (They have already dropped significantly since TB603 was proposed.) The increase in labor costs due to decreased productivity is expected to be temporary and be reduced when workers get more training and/or the older machines get replaced

with newer machines that are more capable of handling the FR thread and material used in fire resistant barriers. Moreover, as noted above, prototype testing costs are expected to decline after the first year of the standard.

The proposed standard references an effective date of twelve months following publication of a final rule. The costs reported here are based on the assumption that supplier companies will be able to maintain existing capacity. If federal standards for bedclothes and upholstered furniture were mandated at the same time and input producers were not given enough time to increase their capacity, input prices would rise in the short-run because of increased demand for the FR material used by all three industries.

Unquantifiable Costs. A mattress manufacturer indicated that in response to an FR mattress standard, the number of models/styles produced may be cut by half. If this response is typical, then there may be a reduction in consumers' utility, because of the reduction in mattress types that they would have to choose from. Others indicate that there will be an aversion to producing double-sided mattresses, because it would be harder for them to pass the burn test. Double-sided mattresses possibly have a longer expected life than single-sided ones. To the extent that consumers prefer double-sided mattresses to single-sided mattresses, the shift away from producing double-sided mattresses imposes a non-monetary cost. Though unquantifiable, this reduction in choices of construction type and design is an added cost to consumers of the proposed standard.

Another unquantifiable cost is the possible increase in liability insurance faced by mattress manufacturers. Because the draft proposed standard measures the performance of the entire mattress when exposed to fire, and not its individual components, liability will be shared by input suppliers and mattress manufacturers. Industry representatives expect that manufacturers' liability insurance will increase to reflect the additional possibility of litigation. This increase, however, cannot be quantified because of the novelty of this performance test. Compliance of more mattress firms with the California TB 603 standard may enable us to estimate the additional liability insurance. Notice that any increase in liability insurance faced by FR input suppliers will be included in the price charged for the FR inputs and does not add to the total increase in resource cost that is expected to result from the proposed standard.

8. Benefits and Costs of the Proposed Standard

This section compares benefits and costs of the proposed standard, presents a sensitivity analysis, and highlights the impact of the proposed standard on retail prices, small businesses, children, and the environment. The sensitivity analysis examines the effect of changing some of the assumptions used earlier. The analysis shows that net benefits continue to be positive under a reasonable range of assumptions about the death and injury effectiveness of the proposed standard, the reduction in injuries resulting from the proposed standard, the value of a statistical life estimate, the discount rate, or the expected mattress life.

The expected aggregate lifetime benefits associated with one year's production of mattresses (25.3 million units) using a discount rate of three percent and an expected 10-year mattress life are $1.56 to $1.88 billion ($61.66 to $74.25 per mattress × 25.3 million mattresses). The corresponding expected aggregate costs of the proposed standard are $0.32 to $1.11 billion ($12.63 to $43.86 times 25.3 million). The resulting net aggregate benefits equal $0.45 to $1.56 billion ($17.79 to $61.62 times 25.3 million). For a mattress life of 14 years (and a 3 percent discount rate), aggregate lifetime benefits, costs, and net benefits of the proposed standard associated with one year of production are $1.52 to $1.92, $0.32 to $1.11, and $0.41 to $1.60 billion respectively. The expected benefits of the proposed standard will accrue for a long period of time and discounted net benefits will, therefore, be much greater than net benefits associated with only the mattress production in the first year the standard becomes effective.

Sensitivity Analysis. The previous analysis compares benefits and costs of the proposed standard using expected mattress lives of 10 and 14 years, a discount rate of 3 percent, an expected effectiveness rate of the proposed standard of 80 to 86 percent of deaths and 86 to 92 percent of injuries, an estimated value of a statistical life of 5 million dollars, and an estimated cost of injury of $179,300. This section examines the effect of changing any of these assumptions on the expected net benefits of the proposed standard.

Comparing expected benefits and costs of the proposed standard, it is clear that net benefits are expected to be positive (*i.e.*, expected total benefits exceed expected costs) for an average mattress life of 10 or 14 years. Though increasing the expected mattress life from 10 to 14 years, while using the 3 percent discount rate, expands the positive range of net benefits, it does not affect the conclusion regarding net benefits. A further increase of the expected life of a mattress similarly would not affect the estimate of net benefits. For example, using the Product Population Model estimate of the number of mattresses in use based on an expected mattress life of 18 years (equal to 367.1 million mattresses) yields net benefits of $14.42 to $64.49 per mattress, using a discount rate of 3 percent.

Net benefits are also positive using discount rates of 3 and 7 percent. Using a 3 percent discount rate, net benefits per mattress equal $17.79 to $61.62 for an average life of 10 years and $16.01 to $63.08 for an average life of 14 years. Using a 7 percent discount rate, net benefits per mattress equal $9.36 to $50.88 for an average life of 10 years and $5.15 to $48.26 for an average life of 14 years. Assuming a larger discount rate reduces net benefits, because future benefits reaped over the life of the mattress contribute less to total benefits.

Net benefits are based on an estimated value of a statistical life equal to $5 million. Changing the estimate used for the value of a statistical life does not have a major impact on the results. For example, if $3 million, the lower bound estimate in Viscusi (1993), is used as an estimate of the value of a statistical life, net benefits become -$2.90 to $36.73 per mattress (using a 3 percent discount rate and an estimated mattress life of 10 years).[7] Alternatively, a $7 million estimate, the higher bound estimate in Viscusi (1993), yields net benefits equal to $38.48 to $86.51 per mattress (using a 3 percent discount rate and an estimated mattress life of 10 years).

Changing the estimate used for the cost of injury will have minimal impact on the results, because the share of benefits from reduced injuries is 16 percent of total benefits. Hence, even if there were no reduction in injuries from the proposed standard, the net benefits would be $7.86 to $49.59 per mattress (using a mattress life of 10 years and a 3 percent discount rate).

The analysis assumes that the effectiveness of the proposed standard ranges from 80 to 86 percent for deaths and 86 to 92 percent for injuries. The

[7] The range for net benefits was derived by subtracting the upper end of the cost range from the lower end of the benefits range to get the lower end of the range for net benefits and subtracting the lower end of the cost range from the higher end of the benefits range to get the higher end of the range for net benefits. Because of this method, both ends of the range for net benefits are a very unlikely occurrence.

net benefits will remain positive, with a lower effectiveness rate. For example, assuming an effectiveness rate of preventing death of only 55 percent yields net benefits of $1.86 to $39.84 per mattress and aggregate net benefits of 50 million to 1.01 billion dollars from all mattresses produced the first year the proposed standard is mandated (using a mattress life of 10 years, a 3 percent discount rate, and the same effectiveness for injuries as used in the baseline analysis). Also, assuming a smaller number of deaths and injuries before the proposed standard is mandated (a smaller baseline risk) would still result in positive net benefits. A 25 percent reduction in baseline death and injury risks yields net benefits of $2.38 to $43.06 per mattress and aggregate net benefits of $60 million to $1.09 billion from all mattresses produced the first year the mattress standard is mandated (using a mattress life of 10 years, a 3 percent discount rate, and the estimated effectiveness measures used in the baseline analysis).

Impact on Retail Prices. One of the top four mattress manufacturers in the industry has re-merchandised its product lines to lower the costs of other materials so that total costs (and prices) are the same as they were before the production of mattresses that comply with TB603. Other manufacturers have indicated that they will have to increase their price which, according to some manufacturers and based on reported traditional industry mark-ups, might translate to an increase in the retail price to consumers that could reach approximately four-fold the increase in manufacturer's costs. Hence the average increase in the price at which mattress manufacturers are willing to sell their products (supply price) will be anywhere between the price of a similar mattress without FR material and that price plus four times the increase in the costs of production. Given the presence of at least one company that will not increase the price, it is unlikely that the new average price will be close to the higher end of the range because of competition for market share among manufacturers.

The market (equilibrium) price is determined by the intersection of consumers' willingness to buy and producers' willingness to sell the product at different prices. The value the equilibrium price will take (relative to the price before the introduction of fire resistant mattress/sets) will be affected by the change in the demand and supply curves for fire resistant mattress/sets and their relative elasticities. Assuming that the demand curve is unaffected, the equilibrium price will reflect the price elasticity of demand (*i.e.* the sensitivity of the change in the quantity demanded to the change in price) as well as the shift in supply. In the short-run, consumers have a relatively elastic demand curve, because they can always postpone the purchase of a durable good, and therefore the increase in the equilibrium price is expected to be much lower than the increase in the supply price (what producers would want to sell the same number of mattress/sets for). Because of the relatively high elasticity of demand, sales are likely to decrease in the short-run. In the long-run, the demand curve is less elastic, and therefore the equilibrium price and quantity (sales) will be higher than the short-run price and quantity.

Given the availability of mattresses whose retail prices will not increase and the competitive nature of the industry, it is possible that, on average, prices will rise by about twice the costs associated with the standard (*i.e.*, retail price mark-up will average about twice the increase in manufacturing costs). Under this assumption, consumers would pay an additional $22.91 ($11.46 × 2) to $79.69 ($39.85 × 2) per mattress/set (compared to the price they would have paid for a current mattress that does not comply with the proposed standard.[8] Assuming that the demand curve for mattresses is unaffected by the draft proposed standard, some consumers will choose not to purchase (or at least delay the purchase of) a new mattress/set. These consumers who delay or choose not to purchase a new set will not be getting the value (or benefits) that they would have gained from purchasing a new set. This loss, though difficult to quantify, is sometimes measured as a loss in consumer surplus (McCloskey, 1982).

It is unlikely, however, that the post-standard demand curve for mattresses will be the same as the current demand. Early 2004 market observations indicate consumer and retail enthusiasm about the fire resistant mattresses already available for sale (Furniture Today, April 26th, 2004.) If this enthusiasm generally reflects consumers' preferences, then the demand for mattresses may increase. This would tend to offset any reduction in mattress sales and possible losses in consumer surplus.

[8] These cost figures include labor and material costs; testing costs; record-keeping costs; and quality assurance program costs. They do not include the costs to wholesalers, distributors, and retailers or compliance costs because they are not incurred by the manufacturers.

Impact on Small Businesses and Other Small Entities. The increase in material and labor costs to meet the proposed standard is not likely to be dependent on a firm's size and will therefore not disproportionately affect small businesses. The cost imposed disproportionately (per unit produced) on small businesses will be the cost of testing, information collection and record keeping and quality control/quality assurance programs. While these costs are estimated to be a little over one dollar per mattress per year for average-sized establishments, they could be substantially higher for small mattress manufacturers. The proposed rule includes measures that these manufacturers can use to minimize the testing burden. Furthermore, firms with more than one establishment, or different firms, may be able to reduce these costs by pooling their testing and quality control programs over all establishments or firms.

Use of pooling across establishments and firms would ameliorate the impact of the proposed standard on small businesses. By getting together across different states and regions, small manufacturers who do not share a common market (and therefore do not compete with each other) can resemble a large producer in their testing and quality control/quality assurance efforts and therefore reduce their costs per mattress. It is also expected that some barrier suppliers would be willing to do the testing and quality control/assurance programs for small manufacturers in exchange for a small charge, which will be similar to the average cost per mattress for large businesses, because the volume of output will be large.

Impact on the Environment. The extraction, processing, refinement, and conversion of raw materials to meet the proposed standard involve energy consumption, labor, and the use of potentially toxic chemicals. Most manufacturing has some impact on the environment, and manufacturing fire resistant mattresses is no exception. Because the proposed standard is a performance standard, it does not restrict manufacturers' choice of fire resistant materials and methods that could be used in the production of mattresses. There appear to be several economically viable options to meet the standard that, based on available information, do not impose health risks to consumers or significantly affect the environment. (See discussion at Section N of this preamble.)

Impact on Children. Deaths and injuries among children constitute a substantial proportion of mattress-

related fire losses, and of the potential benefits of the proposed standard. A CPSC staff report, based on a field investigation study in 1995 to learn more about cigarette-ignited fires and open-flame fires, found that 70 percent of open-flame fires involved child play and that child play was involved in 83 percent of the 150 deaths of children less than five years of age. A National Association of State Fire Marshals 1997 study also indicated that 66 percent of the small open-flame ignitions were reportedly started by children under the age of 15 (21 percent by children under 5).

For virtually all of the fires started by children less than 15 years of age, the ignition was not witnessed by an adult (Boudreault and Smith, 1997). Reducing the likelihood of flashover in the first 30 minutes of the fire may therefore benefit children disproportionately, as it allows enough time for adults to detect the fire and save young children in close proximity to the fire. Also children between 5 and 9 who sometimes do not cooperate with adults and run away from adults to other parts of the occupancy will have enough time to be found and rescued by an adult.

The Epidemiology staff's memorandum shows that, based on national fire estimates for the years 1995–1999, children younger than 15 accounted for 27 percent of addressable deaths and 23 percent of addressable injuries. They also indicate that the proposed standard would reduce deaths and injuries to children ages 5 and younger by 85 to 92 percent and 80 to 87 percent respectively. Deaths and injuries to children ages 5 to 14 were estimated to be reduced by 94 to 97 percent and 88 to 94 percent respectively. This represents a total of 100 to 110 deaths of children less than 15 years of age per year for the 1995–1999 period. It also represents 410 to 440 injuries to children less than 15 years of age for the same period.

9. Alternatives to the Proposed Standard Alternative Maximum Peak Heat Release Rate (PHRR) and Test Duration.

The initial California TB 603 proposal required the duration of the test to last 60 minutes with a maximum PHRR of 150kW. After receiving comments on this proposal, the California Bureau of Home Furnishings and Thermal Insulation changed the criterion to a maximum of 200 kW PHRR in the first 30 minutes, the requirement for both the federal proposed standard and the current TB 603.

Increasing the duration of the test and reducing the PHRR would, according to several input suppliers, increase the resource costs to manufacturers of a queen mattress/foundation set by $15.06 to $50.65 compared to non-complying products (*i.e.*, those not conforming to the proposed standard.)[9] Adding the costs to wholesalers, distributors, and retailers, the costs of testing, quality control/assurance programs, record-keeping, and CPSC compliance efforts, yields a total resource cost of the stricter standard (150 kW and 60 minutes) of $16.59 to $55.74 (costs to manufacturers {$15.06 to $50.65} + cost to wholesalers, distributors, and retailers, equal to 10% of costs to manufacturers {$1.51 to $5.06} + 3.2 cents CPSC compliance costs) per mattress. This represents a marginal increase in costs of $3.96 ($16.59 − $12.63) to $11.88 ($55.74 − $43.86) over the costs associated with the proposed standard.[10]

Such increase in costs would likely result in consumers facing higher mattress prices. Based on traditional industry mark-ups, the new price may reflect a two- to four-fold increase over the increase in production costs, depending on the relative elasticity of demand and supply for mattresses. This yields a total increase in the average price of a queen mattress/set of $30.11 (2 × $15.06) to $202.58 (4 × $50.65). Potential benefits of the stricter standard could be higher than the proposed standard, but the extent is uncertain. Given an effectiveness rate of greater than 80 percent of the proposed standard, the additional benefits of stricter test requirements are limited. Assuming that the stricter standard could eliminate 50 percent of the remaining deaths and injuries (*i.e.*, it could save 39 additional lives and prevent 136 additional injuries), then an additional benefit of about $7.66 per mattress would be expected. This additional benefit, however, would come with additional costs (discussed above) and therefore may reduce net benefits. Moreover, a small increase in net benefits may not justify the large increase in retail price that would result from a stricter standard.

A bedding official estimated that such price increases may result in reduction in sales of 25 percent or more (Furniture/Today, July 21, 2004). The larger increase in prices (compared to the less strict test requirements) and the resulting reduction in sales could drive some of the smaller manufacturers out of business. (The stricter standard is more likely to require replacing some existing machines to accommodate the denser barrier material, which would be disproportionately more costly for smaller firms whose machinery is older and less sophisticated.) Since mattresses are durable goods, one would expect a larger drop in sales in the short-run, as consumers choose to keep their old mattresses longer than before. This would make the reduction in sales more pronounced in the short-run, increasing the likelihood that some firms may exit the market. Moreover, if a large number of consumers choose to extend the life of their mattresses for a longer time period, it will take longer to achieve the benefits expected to be associated with the safer mattresses.

Alternative Total Heat Released in the First Part of the Test. TB 603 limits the total heat released during the first 10 minutes of the test to 25 MJ. The proposed standard's stricter limit (15 MJ in the first 10 minutes) reduces the expected size of the initial fire and hence allows consumers a greater chance to escape the fire and get out of the room, even if the room never reaches flashover. The effectiveness rates presented in the analysis are based on the stricter criterion. Using the TB 603 criterion (25 MJ in the first 10 minutes) would likely reduce estimated benefits (the estimated reductions in deaths and injuries), without having any significant effect on costs. According to several producers, mattresses that use existing barrier technology release total heat that is far below the 25 MJ requirement of TB 603. Therefore, using the TB 603 criterion for the total heat released would not change costs but could potentially reduce the benefits and, hence, the net benefits of the proposed standard.

Moreover, because of the small fuel load of ticking materials currently being used, the lower total heat release requirement allows the production of mattress/sets based on a prototype that has not been tested so long as it differs from the qualified prototype only with respect to ticking and the ticking material is not part of the fire resistance solution. Requiring a test for every prototype with a different ticking was

[9] The lower end of the range is based on barrier price of one supplier, whose capacity is expected to meet 25 to 30 percent of the whole market demand in the short run. The next cheapest alternative costs $24 for the barrier material alone.

[10] These cost estimates (and the resulting marginal increase) should be viewed as approximate since no extensive tests of the barriers have been conducted for 60 minutes, as most manufacturers are focused on meeting the less strict requirements. Input suppliers generally do not assemble and test large numbers of mattresses, and may therefore underestimate reduced labor productivity and/or reduced output per machine (compared to a maximum PHRR of 200 kW for a 30-minute test) due to handling the thicker denser barrier. A number of mattress producers estimate that to meet the stricter standard, manufacturing costs would increase (over those of non-compliant mattresses) by $50 to $70 for a queen-sized set (Furniture/Today, July 21, 2004).

rejected because of the magnitude of the burden it would impose on small manufacturers who do not produce large numbers of any one prototype and who would have been disproportionately adversely affected by these requirements.

Alternative Testing Requirements. The proposed standard requires prototype testing (of three mattress/sets) before a manufacturer starts production of a given mattress design and a confirmatory test of one mattress if more than one establishment or firm are pooling their results. Manufacturers may sell a mattress/set based on a prototype that has not been tested if that prototype differs from the qualified prototype only with respect to: (1) Mattress/foundation size; (2) ticking, unless the ticking of the qualified prototype has characteristics designed to improve the performance on the burn test; and/or (3) any component, material, or method of construction that the manufacturer can demonstrate on an objectively reasonable basis will not cause the prototype to exceed the test criteria. Though production testing (*i.e.*, random burning of mattress/sets to ensure that all production units meet the standard) is encouraged by the proposed standard under quality assurance program requirements, it is not required. The individual manufacturer's decision on whether to conduct production testing (and if so, at what frequency) will clearly depend on the efficacy of his/her quality assurance/control efforts.

As an alternative, the proposed Federal standard could, like TB 603, omit testing or prototype definition requirements. Without testing, however, it might be difficult for manufacturers to know whether their mattresses will comply with the standard. Alternatively, the standard could require production testing with a specified frequency. This specification, however, could result in unnecessary costs if they are not justified given the quality control measures generally undertaken by manufacturers in the absence of the proposed standard. Requiring more tests per establishment, prototype, or enterprise will increase the estimated costs per mattress and could reduce net benefits.

Alternative Effective Date. The proposed effective date is twelve months from the date of publication of the final rule in the **Federal Register**. Given the length of time needed to ensure the availability of inputs for the production of barrier materials, availability of barriers for mattress producers, and a sufficient volume of inventories at retailers' showrooms, an earlier effective date may result in higher input costs to manufacturers. More importantly, it is expected that smaller manufacturers will be disproportionately affected, as they are more likely to wait to invest in development efforts until the technology is developed by larger firms, or until the proposed standard becomes effective. A later effective date (longer than twelve months) could reduce expected net benefits as more fires, deaths, and injuries associated with mattresses would occur between the date of publication in the **Federal Register** and the date the standard becomes effective. The staff is unaware of evidence that small manufacturers would be negatively impacted by a twelve months period relative to a longer period, such as eighteen or twenty-four months. The Commission is requesting comments from small businesses on the expected economic impact of the effective date and other requirements of the proposed rule (*see* section M of this document below).

Taking No Action or Relying on a Voluntary Standard. If the Commission chose to take no action, California may attempt to enforce its standard despite the Commission General Counsel's position on preemption. Larger producers are already moving to comply with California's standard. They also want to avoid product liability claims associated with selling mattresses with different fire resistance in other areas of the country. Three of the largest four producers plan to meet TB 603 nationwide by the end of 2005. Some small California manufacturers may have a smaller incentive to meet TB 603 than a Federal standard. Small manufacturers who do not sell in California may similarly have no incentive to sell mattresses that meet TB 603 requirements in other parts of the country. Hence, expected aggregate net benefits associated with the draft proposed standard are higher than the net benefits that might result under California TB 603 even if it could be enforced in the face of preemption concerns.

No effort has been undertaken to develop a voluntary standard. Furthermore, industry representatives support a mandatory standard to level the playing field among domestic producers (large and small) and importers. If a voluntary standard were developed, the economic burden would fall primarily on the larger firms (who would likely be the first to comply), their market shares could be reduced and benefits to consumers (in terms of reduced deaths and injuries) would likely decline accordingly.

Labeling Requirements. The Commission could require labeling on mattresses to warn consumers in lieu of a standard. Labeling is not considered an effective option for reducing the risk of fires. Since mattress labels are usually covered by bedclothes and may not be seen by the mattress users, labeling mattresses is likely to be an ineffective means of warning consumers. Moreover, fires started by children who cannot read or do not change the bed sheets will not be reduced by a labeling requirement. Hence, while labeling costs are probably negligible, labels are unlikely to reduce mattress fires.

Labeling of chemically treated components has been suggested as a possible requirement of the draft standard, to inform consumers of the materials used. The costs of such labeling would also be negligible, since existing mattresses have labels and producers could probably add a description of the chemical treatment (if any) to the existing label. Labeling of chemically treated components could provide small unquantifiable benefits to consumers as it would provide some additional information. However, because a label would only provide the name of any chemical treatment without any information about whether the treatment has any potential health effects, it would be of little practical use for the consumer. Information on the use of chemically treated components is, however, required as part of the record keeping requirements of the standard.

L. Paperwork Reduction Act

The proposed standard will require manufacturers (including importers) of mattresses/sets to perform testing and maintain records of their testing and quality assurance efforts. For this reason, the rule proposed below contains ''collection of information requirements,'' as that term is used in the Paperwork Reduction Act, 44 U.S.C. 3501–3520. Therefore, the proposed rule is being submitted to the Office of Management and Budget (''OMB'') in accordance with 44 U.S.C. 3507(d) and implementing regulations codified at 5 CFR 1320.11. The estimated costs of these requirements are discussed below.

Costs of Prototype and Confirmation Testing. According to industry representatives, the cost of testing per twin-size mattress/set may be about $500: the sum of the average cost of the materials and shipping ($100) and the cost of the use of the lab ($400). Hence, the cost for testing three specimens as required by the proposed rule mattresses equals $1500. This cost is assumed to be incurred no more than

once per establishment for each prototype. If manufacturers test every mattress construction (*e.g.*, single-sided pillow top, double-sided pillow-top, tight-top, euro-top, * * * etc.), which is estimated, based on conversations with manufacturers, to average about 20 per manufacturer, for every establishment in a given year, then the estimated industry testing cost per establishment per year would approximately equal $30,000. The total number of establishments producing conventional mattresses in 2001 was 639. Using an estimated number of 739 producers of both conventional and unconventional mattresses, the annual cost to all (conventional and unconventional) mattress producers is $22.17 million.

Cost of information collection and recordkeeping. In addition to prototype testing, the proposed standard will require detailed documentation of prototype identification and testing records, model and prototype specifications, inputs used, name and location of suppliers, and confirmation test record, if establishments choose to pool a prototype. This documentation is in addition to documentation already conducted by mattress manufacturers in their efforts to meet the cigarette standard. Detailed testing documentation will be done by the test lab and is included in the estimated cost of testing. Based on CPSC Office of Compliance staff estimates, all requirements of the proposed standard are expected to cost an establishment about 110 minutes, or 1.3 hours, per qualified prototype. Assuming that every establishment will produce 20 different qualified prototypes, the increase in record keeping costs is about $935 (110 minutes × 20 prototypes × $25.50 in average civilian workers' compensation per hour) per establishment per year. (Note that pooling among establishments or using a prototype qualification for longer than one year will reduce this estimate.) This translates to an annual cost to all (conventional and unconventional) mattress producers of $690,965 ($935 × 739).

Cost of quality control/quality assurance programs. To ensure that all mattresses are produced to the prototype specification across all factories and over the years for which a production line exists, mattress manufacturers will need a thorough well-documented quality control/assurance program. The top 12 mattress producers (with a market share of almost 80 percent) have a existing quality control programs which could be modified to fit the new standard with minimal additional costs. Smaller producers, whose quality control program is less detailed or non-existent, will incur some incremental costs as a result of the proposed standard. These incremental costs will be small for each manufacturer and less when measured per mattress. (See the section on impact of the proposed standard on small businesses for a description of their cost of quality control and quality assurance programs.)

Additionally, the proposed standard encourages random production testing to assure manufacturers that their mattresses continue to meet the requirements of the rule. Assuming that an average of 3 mattress/set constructions will be tested per establishment per year yields an estimated cost of production testing of about $1500. The labor needed to meet the quality assurance measures required by the standard is estimated by CPSC Office of Compliance staff to be 224 minutes per establishment per qualified prototype per year. Assuming that every establishment will produce twenty different qualified prototypes, the increase in labor costs associated with quality assurance requirements of the draft proposed standard is about $1904 (224 minutes × 20 qualified prototypes × $25.50 average civilian workers' compensation per hour) per establishment per year. Hence total costs of quality assurance/quality control programs may average about $3,404 ($1500+1904) per establishment per year. This translates to an annual cost to all (conventional and unconventional) mattress producers of $2,515,556 ($3,404 × 739).

M. Initial Regulatory Flexibility Analysis

1. Introduction

The Regulatory Flexibility Act (''RFA'') generally requires that agencies review proposed rules for their potential economic impact on small entities, including small businesses. Section 603 of the RFA calls for agencies to prepare and make available for public comment an initial regulatory flexibility analysis describing the impact of the proposed rule on small entities and identifying impact-reducing alternatives. Accordingly, staff prepared an initial regulatory flexibility analysis for the mattress proposed rule. [9] A summary of that analysis follows.

2. Impact on Small Businesses and Other Small Entities

Summary of proposed requirements. The proposed standard will apply to all mattresses and mattress and foundation sets, as discussed earlier in this document (see section G.2. above). Options that manufacturers may choose in order to meet the proposed standard include one or a combination of the following: fire resistant ticking; chemically treated or otherwise fire resistant filling products; or a fire blocking barrier (either a sheet style barrier or a high-loft barrier, sometimes called a fiber barrier).

For each qualified prototype, three mattresses/sets must be tested and must pass the test requirements. To obtain a passing result, each mattress/set must pass a 30 minute test, where the PHRR does not exceed 200 kW and the total heat release does not exceed 15 MJ in the first 10 minutes of the test. A failure of any of the sets would require that the problem be corrected and the prototype be retested and pass the test (in triplicate). Manufacturers may sell any mattress/foundation set based on a qualified prototype. Manufacturers may also sell a mattress/set based on a prototype that has not been tested if that prototype differs from a qualified prototype only with respect to (1) mattress/foundation size; (2) ticking, unless the ticking of the qualified prototype has characteristics designed to improve performance on the burn test; and/or (3) any component, material, or method of construction that the manufacturer can demonstrate, based on an objectively reasonable basis, will not cause the prototype to exceed the test criteria specified above.

If one or more establishments (plants within the same firm) or independent firms choose to ''pool'' prototypes, then each pooling plant or firm is required to conduct a confirmation test for one mattress/set it produces locally. If that set fails, then its producer cannot sell mattresses based on that prototype unless it successfully tests another mattress/set after correcting its production to make sure that it is identical to the original prototype. A pooling firm may sell other mattresses that have not been tested by the pooling firm if they differ from the pooled prototype only with respect to (1) mattress/foundation size; (2) ticking, unless the ticking of the qualified prototype has characteristics designed to improve performance on the burn test; and/or (3) any component, material, or method of construction that the manufacturer can demonstrate, based on an objectively reasonable basis, will not cause the prototype to exceed the test criteria specified above.

Manufacturers are required to keep records of all tests performed and their results, including video or pictures, prototype identification number, date and time of test, name and location or

testing facility for as long as the prototype is in production and for three years after its production ceases. Manufacturers are also required to keep records of a unique identification number for the qualified prototype and a list of the unique identification numbers of all other prototypes based on the qualified prototype, together with a description of the material substituted and/or size change. Moreover, they are required to document the name and supplier of each material used in construction and keep physical samples of the material. Additionally, they are required to identify the details of the application of any flame retardant treatments and/or inherently flame retardant fibers employed relative to mattress components. Finally, they are required to have an adequate quality assurance program in place.

Impact on small businesses. The proposed standard covers manufacturers and importers of mattresses. There were 557 mattress firms and 639 mattress establishments in 2001, according to the Statistics of U.S. businesses, Census Bureau data. All but the largest twelve firms had less than 500 employees. The U.S. Small Business Administration's Office of Advocacy defines a small business as one that is independently owned and operated and not dominant in its fields. A definition that is used frequently and is less subject to interpretation is a firm with fewer than 500 employees. The latter definition classifies 97.8 percent ((557 − 12)/557) of all mattress firms as small businesses.

Average employment per firm for the whole industry is 45.8 employees. Average employment for the 1–4 employees per enterprise group, which represents 22.98 percent of all firms, is 2.4 employees. Average employment for the fewer than twenty employees per enterprise group, which represents 61.22 percent of all firms, is 6.2 employees. Hence more than half of mattress firms have fewer than twenty employees.

In addition to domestic producers, importers will be affected by the proposed standard. Imported mattresses represent less than two percent of total U.S. shipments.

The increase in material and labor costs of the proposed standard (estimated to be $10.41 to $38.80 per mattress) is not likely to be dependent on a firm's size and will therefore not adversely affect small businesses. Larger firms are bearing all the capital investment costs of research and development, sharing some of these costs with input suppliers. Most smaller firms are waiting to buy from the suppliers a barrier solution, which has been tested extensively and is known to meet the standard. The price smaller firms pay to cover the development and testing costs borne by the supplier will not disproportionately impact them, because it is not measured relative to their small output, but relative to the supplier's output. Other smaller firms may combine their development efforts to be able to benefit from dividing the costs over a larger number of firms. Finally, small mattress producers who do not assemble the mattress panels, but buy them from a panel supplier are effectively acting as a large producer by combining all their output. This is because the panel supplier will be responsible for including a barrier in the panel assembly and will pass that cost on to the mattress producers, again not disproportionately impacting the small producers who buy the already assembled panels.

The cost imposed disproportionately (per unit produced) on small businesses will be the cost of testing, information collection and record keeping, and quality control/quality assurance programs. While the regulatory analysis estimates these costs to be a little over one dollar per mattress per year for average-sized establishments, they could be substantially higher for small mattress producers. If manufacturers use a prototype qualification to produce mattress/set constructions for longer than a year, or if they use a worst-case prototype to represent other mattress constructions, these costs will be lower. Furthermore, firms with more than one establishment may be able to reduce these costs by pooling their testing and quality control programs over all establishments. Small independent firms could also pool their testing to reduce their costs per mattress.

Use of pooling across establishments and firms would ameliorate the impact of the proposed standard on small businesses. By getting together across different states and regions, small manufacturers who do not share a common market (and therefore do not compete with each other) can resemble a large manufacturer in their testing and quality control/quality assurance efforts and therefore reduce their costs per mattress. It is also expected that some barrier suppliers would be willing to do the testing and quality control/assurance programs for small manufacturers in exchange for a small charge, which will be similar to the average cost per mattress for large businesses, because the volume of output will be large.

3. Alternatives and Their Possible Effect on Small Businesses

Alternatives considered by the Commission are discussed in the Preliminary Regulatory Analysis section of this preamble (Section K). As discussed therein, increasing the duration of the test and reducing the PHRR would increase costs without necessarily increasing benefits. This would necessitate an increase in costs. Staff estimates the marginal increase in costs to be $3.96 to $11.88 over the costs of the proposed standard. Although a stricter standard might increase benefits, any increase is likely to be small since the proposed standard has an effectiveness rate of 80 percent.

An increase in costs would likely result in an increase in mattress prices. A bedding official estimated that such price increases may result in reduction in sales of 25% or more (Furniture/Today, July 21, 2004). The larger increase in prices (compared to the less strict test) and the resulting reduction in sales could drive some of the smaller producers out of business. (A stricter standard would be more likely to require replacing some existing machines, to accommodate the denser barrier material, which would be disproportionately more costly for smaller firms, whose machinery is older and less sophisticated.) Since mattresses are durable goods, one would expect a larger drop in sales in the short-run than in the long-run, as consumers choose to keep their old mattresses longer than before. This would make the reduction in sales more pronounced in the short-run, increasing the likelihood that some firms may exit the market. Moreover, if a large number of consumers choose to extend the life of their mattresses for a longer time period, it will take longer to achieve the benefits expected to be associated with the safer mattresses.

As discussed in the preliminary regulatory analysis, the Commission also considered a different criterion for the total heat released during the first 10 minutes of the test, *i.e.*, 25 MJ instead of the 15 MJ the Commission is proposing. Using the 25 MJ criterion would likely reduce estimated benefits (the estimated reductions in deaths and injuries), without having any significant effect on costs. According to several producers, mattresses that use existing barrier technology release total heat that is far below the 25 MJ level.

Moreover, because of the small fuel load of ticking materials currently being used, the lower total heat release requirement allows the production of mattress/sets based on a prototype that has not been tested so long as it differs

from the qualified prototype only with respect to ticking and the ticking is not part of the fire resistance solution. Requiring a test for every prototype with a different ticking was rejected because of the magnitude of the burden it would impose on small producers who do not produce large numbers of any one prototype and would have been adversely affected by these requirements.

The Commission also considered alternative testing requirements. The proposed standard requires prototype testing (of three specimens of mattress/sets) before a manufacturer starts production of a given mattress design and a confirmatory test of one mattress if a firm is producing a mattress based on a prototype produced by another manufacturer in a pooling arrangement. Although production testing (*i.e.* burning mattress/sets to ensure that production units meet the standard) is encouraged by the proposed standard under quality assurance program requirements, it is not required. The individual manufacturer's decision on the need for and frequency of production testing will clearly depend on the efficacy of its quality assurance/control efforts.

As an alternative, the Federal standard could, like TB 603, omit testing requirements. However, without testing, it might be difficult for manufacturers to know whether their mattresses will comply with the standard. Alternatively, the standard could require production testing with a specified frequency. This specification, however, could result in unnecessary costs if they are not justified given the quality control measures generally undertaken by producers in the absence of the proposed standard. Requiring more tests per establishment, prototype, or enterprise will increase the estimated costs per mattress and could reduce net benefits.

The Commission also could have chosen to take no action. In this situation, the larger producers would probably follow TB 603 for all their mattresses, not just those sold in California, in order to avoid product liability claims. Some small California manufacturers may decline to meet TB 603 on the basis that it is preempted by the existing federal standard. Small manufacturers who do not sell in California may have no incentive to meet TB 603 requirements throughout the country. Hence, expected aggregate net benefits associated with the draft proposed standard are higher than the net benefits that might result under California TB 603.

Another possible option would be to require labeling on mattresses to warn consumers in lieu of a standard. However, as discussed in the Preliminary Regulatory Analysis, labeling is not likely to be effective at reducing mattress-related deaths and injuries.

A final possible option might be to set a later effective date for small companies. If needed, this could allow smaller companies more time to prepare for the standard since they are less likely to be currently preparing for California's similar TB 603. However, the Commission has no evidence at this time that a split effective date is necessary.

4. Conclusion

Almost all mattress firms would be considered small businesses, using the Small Business Administration definition. Material and labor costs for all firms are expected to initially increase on average by $10–$39 dollars per mattress set produced. These cost increases are expected to be borne equally by all firms and hence do not have an adverse impact on the smaller mattress producers. These costs are expected to decline in the future due to improved technology of producing fire retardant materials and increase competition among input suppliers.

Although testing and recordkeeping requirements may have a disproportionate impact on small manufacturers, the proposed standard allows manufacturers to pool test results, to vary their tickings without new prototype testing (unless the ticking had characteristics designed to improve performance on the specified mattress test), and to make other changes in their prototype without new prototype testing if the change does not negatively effect the mattress's ability to meet the test criteria. These options should minimize burdens on small businesses.

The Commission requests comments on any or all of the provisions in the proposed rule with regard to : (1) The impact of the provisions (including any benefits and costs), if any, on small entities and (2) what alternatives, if any, the Commission should consider, as well as the costs and benefits of those alternatives to small entities in light of the above analysis. The Commission is particularly interested in information with regard to the impact of the following aspects of the proposed rule:

- Prototype and confirmation testing requirements
- Quality Control/quality assurance program requirements
- Recordkeeping requirements
- Twelve month effective date

Also, it would be most useful to receive comments on ways in which the proposal could be modified to reduce any costs or burdens for small entities, and whether and how technological developments could reduce the costs for small entities of complying with the rule.

N. Environmental Considerations

General. Usually, CPSC rules establishing performance requirements are considered to ''have little or no potential for affecting the human environment,'' and environmental assessments are not usually prepared for these rules (*see* 16 CFR 1021.5 (c)(1)). However, in order to meet this standard, many manufacturers will need to change some materials that they use to manufacture mattresses: either using more inherently flame resistant materials or incorporating flame retardant (FR) chemicals into their products. Therefore, the Commission concluded that a more thorough consideration of the potential for environmental impacts is warranted.

The staff's analysis contained in the memorandum ''Preliminary Environmental Assessment of a Draft Proposed Open-Flame Ignition Resistance Standard for Mattresses,'' [7] concludes that since the proposed standard states performance requirements, manufacturers will have several options for meeting the requirements of the proposed standard. Although there are still some unsettled questions, there appear to be numerous promising methods that manufacturers could use without posing an unacceptable health risk to consumers or significantly affecting the environment. Moreover, even if a chemical used by some manufacturers were shown to pose an unacceptable risk to human health or the environment, there would be various regulatory and other mechanisms that could be used to remove the chemical from applications where it poses a risk.

Possible approaches to meet the proposed standard. The standard does not prescribe the means that manufacturers must use to meet the standard. The staff expects, however, that most manufacturers will use some kind of flame resistant barrier to protect the mattress components with the greatest combustible fuel loads from the flames. These barriers may be fabric, batting, or other materials that are either inherently flame resistant or that have been treated with flame retardant chemicals. [6&7]

Because manufacturers are now evaluating their alternatives, the staff

does not know the methods that each manufacturer will use to meet the proposed standard. Therefore, the staff's analysis attempts to provide some context for considering the environmental impacts of the standard. More definitive conclusions should be possible as more information concerning the methods that manufacturers will use to meet the standard becomes available.

How the proposed standard could affect the environment. About 25 million mattresses are sold annually, and most will probably require some changes in materials used or construction to meet the standard. These changes, such as the incorporation of a flame resistant barrier or other materials, will increase the manufacture of fire resistant materials or FR chemicals. This could mean increased exposure to such chemicals for workers and consumers. Additionally, at the end of their useful lives, the mattresses/sets will be disposed of. Potential environmental impacts will vary depending on the method the manufacturer used to meet the standard and the potential for the particular FR chemicals used to persist in the environment. [7]

FR chemicals widely in use, but new applications possible. Many FR chemicals are widely used. In the U.S., the consumption of flame retardant chemicals is estimated to be over 1 billion pounds annually and is increasing. This includes various fire retardant chemicals based on bromine, antimony, chlorine, phosphorous, nitrogen, and boron. Additionally, there are some fibers where the FR chemical is incorporated into the polymer of the fiber itself or that are inherently fire resistant. These include some modacrylic, melamine, and para-aramid fibers.

Because the chemicals and materials that would be used to meet a mattress standard are already being used in other applications, the manufacture of these materials will not create new impacts, though it could intensify effects that are already occurring. A mattress flammability standard could result in some FR chemicals or flame resistant materials being used in applications where they have not been used before. This would result in some new exposure patterns for these materials. For example, workers in mattress factories could be exposed to the chemicals as could the ultimate consumers. However, these new exposure patterns may be similar to ones that are already occurring since these chemicals are widely used in other applications. For example, workers involved in manufacturing protective apparel, carpets, and transportation upholstery may already be exposed to these chemicals as are the consumers of the products. Some of these FR chemicals and materials may already be used in mattress and bedding applications. For example, boric acid is already used to treat cotton batting in mattresses and futons. [6&7]

Possible regulatory protections. Some chemicals that have been used for their fire resistant properties have been determined to have unacceptable adverse impacts on health and the environment in some applications (*e.g.*, TRIS (2,3,-dibromopropyl) phosphate, pentabromodiphenyl oxide (''PBDPO'') and octabromodiphenyl oxide (''BDPO'')). [7]

The U.S. Environmental Protection Agency (EPA) has the authority to regulate the use of toxic chemicals under the Toxic Substances Control Act (TSCA) (15 U.S.C. 2601 *et seq.*). EPA also monitors and promotes research into potential toxic or environmental effects of chemicals which it believes could pose environmental risks. With regard to flame retardants, the EPA is developing a significant new use rule (SNUR), under section 5(a)(2) of TSCA, which is expected to cover the use of several flame retardants in residential upholstered furniture. A SNUR would require chemical manufacturers and importers to report scientific data to the EPA so that EPA may determine whether controls on the use of the chemical may be warranted. There is expected to be some overlap between the flame retardants that will be covered by the SNUR for use in upholstered furniture and flame retardants that can be used in mattresses. Decabromodiphenyl oxide (DBDPO), for example, can be used as a backcoating in upholstery fabric or on fire resistant barriers for mattresses. Additional activities by EPA, The National Toxicology Program (NTP) of the Department of Health and Human Services (DHHS), and the Occupational Safety and Health Administration (OSHA) can provide information about any adverse health effects of FR chemicals and take actions to limit their use if necessary. [6&7] Work by the National Research Council of the National Academy of Sciences on selected flame-retardant chemicals is an additional source of information on these FR chemicals. [16]

Conclusion. The staff's environmental analysis examines some of the methods manufacturers might use to meet the proposed standard and discusses what is known about their potential toxicity and possible environmental impact. The analysis concludes that there are FR chemicals and flame resistant materials that, based on currently available data, are not expected to pose unacceptable risks to the environment and that are widely used in other applications. [7]

In accordance with the National Environmental Policy Act (''NEPA''), the Executive Director of CPSC has issued a Finding of No Significant Impact (''FONSI'') for the proposed mattress standard. The FONSI is based on the staff's Environmental Assessment, which has been summarized above. The FONSI concludes that there will be no significant impacts on the quality of the human environment as a result of the proposed mattress flammability standard. The Commission requests comments on both the Environmental Assessment and the FONSI.[11]

O. Executive Order 12988

According to Executive Order 12988 (February 5, 1996), agencies must state the preemptive effect, if any, of new regulations.

The FFA provides that, generally, if the Commission issues a flammability standard for a fabric, related material or product under the FFA, ''no State or political subdivision of a State may establish or continue in effect a flammability standard or other regulation for such fabric, related material or product if the standard or other regulation is designed to protect against the same risk of the occurrence of fire with respect to which the standard or other regulation under this Act is in effect unless the State or political subdivision standard or other regulation is identical to the Federal standard other regulation.'' 15 U.S.C. 1203(a). Upon application to the Commission, a State or political subdivision of a State may be exempted from this preemptive effect if compliance with the State or political subdivision requirement would not cause the fabric, related material or product to be in violation of any FFA standard or regulation, and the State or political subdivision's standard (1) provides a significantly higher degree of protection from the risk of occurrence of fire than the FFA standard and (2) does not unduly burden interstate commerce. Id. 1203(c)(1). In addition, the Federal government, or a State or local government, may establish and continue in effect a non-identical flammability standard or other regulation for the

[11] Both of these documents are available from the Commission's Office of the Secretary (*see* ''Addresses'' section above) or from the Commission's web site (*http://www.cpsc.gov/library/foia/foia.html*).

Federal, State or local government's own use if it provides a higher degree of protection than the FFA standard. Id. 1203(b). Thus, with the exceptions noted above, the proposed open flame standard for mattresses would preempt non-identical state or local mattress flammability standards designed to protect against the same risk of the occurrence of fire.

The issue of preemption has been raised with regard to the proposed standard because of California's TB 603. In a letter to the Bureau Chief of California's Bureau of Home Furnishings and Thermal Insulation, dated April 9, 2003, the Commission's General Counsel has taken the position that CPSC's existing federal Standard for the Flammability of Mattresses (16 CFR 1632) preempts California's TB 603. That conclusion was based on legislative history and CPSC's General Counsel Advisory Opinion 289 (Dec. 8, 1983) indicating that if federal and state requirements are both designed to address the same risk (*i.e.*, the occurrence of fire), the federal standard will have preemptive effect even if the two standards use different ignition sources.

Legislative history of the FFA's preemption provision states:

> [A] State standard designed to protect against the risk of injury from a fabric catching on fire would be preempted by a Federal flammability standard covering the same fabric even though the Federal flammability standard called for tests using matches and the State standard called for tests using cigarettes. When an item is covered by a Federal flammability standard, * * * a different State or local flammability requirement applicable to the same item will be preempted since both are designed to protect against the same risk, that is the occurrence of or injury from fire.

H.R. Rep. No. 1022, 94th Cong., 2d Sess. 29 (1976). The Commission believes that this legislative history indicates that the proposed standard would preempt non-identical state requirements addressing the flammability of mattresses.

P. Effective Date

The Commission proposes that the rule would become effective one year from publication of a final rule in the **Federal Register** and would apply to mattresses entering the chain of distribution on or after that date. The Commission is aware that many mattress manufacturers are modifying their products to comply with California's TB 603 which prescribes requirements that are similar to this proposed rule and will become effective January 1, 2005. Thus, the Commission believes that a one-year effective date should allow sufficient time for manufacturers to develop products for nationwide markets that will meet the proposed requirements. The Commission requests comments, especially from small businesses on the proposed effective date and the impact it would have on them.

Q. Proposed Findings

Section 1193(a) and (j)(2) of the FFA require the Commission to make certain findings when it issues a flammability standard. The Commission must find that the standard: (1) Is needed to adequately protect the public against the risk of the occurrence of fire leading to death, injury or significant property damage; (2) is reasonable, technologically practicable, and appropriate; (3) is limited to fabrics, related materials or products which present unreasonable risks; and (4) is stated in objective terms. Id. 1193(b). In addition, the Commission must find that: (1) If an applicable voluntary standard has been adopted and implemented, that compliance with the voluntary standard is not likely to adequately reduce the risk of injury, or compliance with the voluntary standard is not likely to be substantial; (2) that benefits expected from the regulation bear a reasonable relationship to its costs; and (3) that the regulation imposes the least burdensome requirement that would prevent or adequately reduce the risk of injury. The last three findings must be included in the regulation. Id. 1193(j)(2). These findings are discussed below.

The standard is needed to adequately protect the public against unreasonable risk of the occurrence of fire. National fire loss estimates indicate that mattresses and bedding were the first items to ignite in 19,400 residential fires attended by the fire service annually during 1995–1999. These fires resulted in 440 deaths, 2,230 injuries and $273.9 million in property loss each year. Of these, the staff considers an estimated 18,500 fires, 440 deaths, 2,160 injuries, and $259.5 million property loss annually to be addressable by the proposed standard. The Commission estimates that the standard will prevent 80 to 86 percent of deaths and 86 to 92 percent of the injuries occurring with these addressable mattress/bedding fires. Thus, the Commission estimates that when all mattresses have been replaced by ones that comply with the standard, 310 to 330 deaths and 1,660 to 1,780 injuries will be avoided annually as a result of the standard.

The regulatory analysis explains that the Commission estimates lifetime net benefits of $18 to $62 per mattress or aggregate lifetime net benefits for all mattresses produced in the first year of the standard of $450 to $1,560 million from the standard. Thus, the Commission preliminarily finds that the standard is needed to adequately protect the public from the unreasonable risk of the occurrence of fire.

The standard is reasonable, technologically practicable, and appropriate. Through extensive research and testing, NIST developed a test method to assess the flammability of mattresses ignited by an open flame. The test method represents the typical scenario of burning bedclothes igniting a mattress. Based on NIST's testing, the standard establishes criteria that will reduce the fire intensity of a burning mattress, allowing more time for occupants to escape before flashover occurs. NIST testing has also demonstrated that mattresses can be constructed with available materials and construction that will meet the test criteria. Therefore, the Commission finds that the standard is reasonable, technologically practicable, and appropriate.

The standard is limited to fabrics, related materials, and products that present an unreasonable risk. The standard applies to mattresses and mattress and foundation sets. It is a performance standard. Thus, it neither requires nor restricts the use of particular fabrics, related materials or products. Manufacturers may choose the materials and methods of construction that they believe will best suit their business and result in mattresses that can meet the specified test criteria. As discussed above, the Commission concludes that current mattresses present an unreasonable risk. Therefore, the Commission finds that the standard is limited to fabrics, related materials, and products that present an unreasonable risk.

Voluntary standards. The Commission is not aware of any voluntary standard in existence that adequately and appropriately addresses the specific risk of injury addressed by this standard. Thus, no findings concerning compliance with and adequacy of voluntary standards are necessary.

Relationship of Benefits to Costs. The Commission estimates that the total lifetime benefits of a mattress complying with this standard will range from $62 to $74 per mattress (based on a 10 year mattress life and 3% discount rate). The Commission estimates that total resource costs of the standard will range from $13 to $44 per mattress. This yields net benefits of $18 to $62 per mattress. The Commission estimates

that aggregate lifetime benefits associated with all mattresses produced the first year the standard becomes effective range from $1,560 to $1,880 million, and that aggregate resource costs associated with these mattresses range from $320 to $1,110 million, yielding net benefits of about $450 to $1,560 million. Therefore, the Commission finds that the benefits from the regulation bear a reasonable relationship to its costs.

Least burdensome requirement. The Commission considered the following alternatives: alternative maximum peak heat release rate and test duration, alternative total heat released in the first 10 minutes of the test, mandatory production testing, a longer effective date, taking no action, relying on a voluntary standard, and requiring labeling alone. As discussed in the preamble above and the regulatory analysis, these alternatives are expected to increase costs without increasing benefits, or significantly reduce the benefits expected from the rule. Therefore, the Commission finds that the standard imposes the least burdensome requirement that would adequately reduce the risk.

R. Conclusion

For the reasons stated in this preamble, the Commission preliminarily finds that an open flame flammability standard for mattresses and mattress and foundation sets is needed to adequately protect the public against the unreasonable risk of the occurrence of fire leading to death, injury, and significant property damage. The Commission also preliminarily finds that the standard is reasonable, technologically practicable, and appropriate. The Commission further finds that the standard is limited to the fabrics, related materials and products which present such unreasonable risks.

List of Subjects in 16 CFR Part 1633

Consumer protection, Flammable materials, Labeling, Mattresses and mattress pads, Records, Textiles, Warranties.

For the reasons stated in the preamble, the Commission proposes to amend Title 16 of the Code of Federal Regulations by adding a new part 1633 to read as follows:

PART 1633—STANDARD FOR THE FLAMMABILITY (OPEN-FLAME) OF MATTRESSES and MATTRESS AND FOUNDATION SETS

Subpart A—The Standard

Sec.
1633.1 Purpose, scope and applicability.
1633.2 Definitions.
1633.3 General requirements.
1633.4 Prototype testing requirements.
1633.5 Prototype pooling and confirmation testing requirements.
1633.6 Quality assurance requirements.
1633.7 Mattress test procedure.
1633.8 Findings.
1633.9 Glossary of terms.

Subpart B—Rules and Regulations

1633.10 Definitions.
1633.11 Records.
1633.12 Labeling.
1633.13 Tests for guaranty purposes, compliance with this section, and ''one of a kind'' exemption.

Subpart C—Interpretations and Policies

1633.14 Policy clarification on renovation of mattresses.
Figure 1 to Part 1633—Test Assembly, Shown in Furniture Calorimeter (Configuration A)
Figure 2 to Part 1633—Test Arrangement in 3.05m × 3.66m (10 ft × 12 ft) Room (Configuration B)
Figure 3 to Part 1633—Details of Horizontal Burner Head
Figure 4 to Part 1633—Details of Vertical Burner Head
Figure 5 to Part 1633—Details of Burner Stand-off
Figure 6 to Part 1633—Burner Assembly Showing Arms and Pivots (Shoulder Screws), in Relation to, Portable Frame Allowing Burner Height Adjustment
Figure 7 to Part 1633—Elements of Propane Flow Control for Each Burner
Figure 8 to Part 1633—Jig for Setting Mattresses and Foundation Sides in Same Plane
Figure 9 to Part 1633—Burner Placements on Mattress/Foundation
Figure 10 to Part 1633—Jig for Setting Burners at Proper Distances from Mattress/Foundation
Figure 11 to Part 1633—Diagrams for Glossary of Terms
Appendix A to Part 1633—Calibration of Propane Flowmeters
Appendix B to Part 1633—Burner Operation Sequence

Authority: 15 U.S.C. 1193, 1194.

Subpart A—The Standard

§ 1633.1 Purpose, scope, and applicability.

(a) *Purpose.* This Part 1633 establishes flammability requirements that all mattress and mattress and foundation sets must meet before sale or introduction into commerce. The purpose of the standard is to reduce deaths and injuries associated with mattress fires by limiting the size of the fire generated by a mattress or mattress and foundation set during a thirty minute test.

(b) *Scope.* (1) All mattresses and all mattress and foundation sets, as defined in § 1633.2(a) and § 1633.2(b), of any size, manufactured or imported after [the effective date of this standard] are subject to the requirements of the standard.

(2) One-of-a-kind mattresses and foundations may be exempted from testing under this standard in accordance with § 1633.13(c).

(c) *Applicability.* The requirements of this part 1633 shall apply to each ''manufacturer'' (as that term is defined in § 1633.2(i)) of mattresses and/or mattress and foundation sets which are manufactured for sale in commerce.

§ 1633.2 Definitions.

In addition to the definitions given in section 2 of the Flammable Fabrics Act as amended (15 U.S.C. 1191), the following definitions apply for purposes of this part 1633.

(a) *Mattress* means a resilient material or combination of materials enclosed by a ticking (used alone or in combination with other products) intended or promoted for sleeping upon.

(1) This term includes, but is not limited to, adult mattresses, youth mattresses, crib mattresses (including portable crib mattresses), bunk bed mattresses, futons, flip chairs without a permanent back or arms, sleeper chairs, and water beds or air mattresses if they contain upholstery material between the ticking and the mattress core. Mattresses used in or as part of upholstered furniture are also included; examples are convertible sofa bed mattresses, corner group mattresses, day bed mattresses, roll-away bed mattresses, high risers, and trundle bed mattresses. See § 1633.9 Glossary of terms, for definitions of these items.

(2) This term excludes mattress pads, mattress toppers (items with resilient filling, with or without ticking, intended to be used with or on top of a mattress), sleeping bags, pillows, liquid and gaseous filled tickings, such as water beds and air mattresses that contain no upholstery material between the ticking and the mattress core, upholstered furniture which does not contain a mattress, and juvenile product pads such as car bed pads, carriage pads, basket pads, infant carrier and lounge pads, dressing table pads, stroller pads, crib bumpers, and playpen pads. See § 1633.9 Glossary of terms, for definitions of these items.

(b) *Foundation* means a ticking covered structure used to support a mattress or sleep surface. The structure may include constructed frames, foam, box springs, or other materials, used alone or in combination.

(c) *Ticking* means the outermost layer of fabric or related material of a mattress or foundation. It does not include any other layers of fabric or related materials quilted together with, or otherwise

attached to, the outermost layer of fabric or related material.

(d) *Upholstery material* means all material, either loose or attached, between the mattress ticking and the core of a mattress, if a core is present.

(e) *Edge seam* means the seam or border edge of a mattress or foundation that joins the top and/or bottom with the side panels.

(f) *Tape edge* means an edge seam made by using binding tape to encase and finish raw edges.

(g) *Binding tape* means a fabric strip used in the construction of some edge seams.

(h) *Seam thread* means the thread used to form stitches in construction features, seams, and tape edges.

(i) *Manufacturer* means an individual plant or factory at which mattresses and/or mattress and foundation sets are manufactured or assembled. For purposes of this Part 1633, an importer is considered a manufacturer.

(j) *Prototype* means a specific design of mattress and corresponding foundation, if any, which, except as permitted by § 1633.4(b), is the same in all material respects as, and serves as a model for, production units intended to be introduced into commerce.

(k) *Prototype pooling* means a cooperative arrangement whereby one or more manufacturers may rely on a prototype produced by a different manufacturer.

(l) *Production lot* means any quantity of finished mattresses or mattress and foundation sets that are produced in a production interval defined by the manufacturer, and are intended to replicate a specific prototype that complies with this part 1633.

(m) *Confirmation test* means a pre-market test conducted by a manufacturer that is relying on a pooled prototype produced by another manufacturer. A confirmation test must be conducted in accordance with the procedures set forth in § 1633.7 to confirm that the manufacturer can produce a mattress and corresponding foundation, if any, that is identical to the prototype in all material respects.

(n) *Specimen* means a mattress and corresponding foundation, if any, tested under this part.

(o) *Twin size* means any mattress with the dimensions 38 inches (in) (96.5 centimeters (cm)) x 74.5 in. (189.2 cm), all dimensions may vary by ± ½ in. (± 1.3 cm)

(p) *Qualified prototype* means a prototype that has been tested in accordance with § 1633.4(a) and meets the criteria stated in § 1633.3(b).

(q) *Core* means the main support system that may be present in a mattress, such as springs, foam, water bladder, air bladder, or resilient filling.

§ 1633.3 General requirements.

(a) *Summary of test method.* The test method set forth in § 1633.7 measures the flammability (fire test response characteristics) of a mattress specimen by exposing the specimen to a specified flaming ignition source and allowing it to burn freely under well-ventilated, controlled environmental conditions. The flaming ignition source shall be a pair of propane burners. These burners impose differing fluxes for differing times on the top and sides of the specimen. During and after this exposure, measurements shall be made of the time-dependent heat release rate from the specimen, quantifying the energy generated by the fire. The rate of heat release must be measured by means of oxygen consumption calorimetry.

(b) *Test criteria.* When testing the mattress or mattress and foundation set in accordance with the test procedure set forth in § 1633.7, the specimen shall comply with both of the following criteria:

(1) The peak rate of heat release shall not exceed 200 kilowatts (''kW'') at any time within the 30 minute test; and

(2) The total heat release shall not exceed 15 megajoules (''MJ'') for the first 10 minutes of the test. In the interest of safety, the test operator should discontinue the test and record a failure if a fire develops to such a size as to require suppression for the safety of the facility.

(c) *Testing of mattress and corresponding foundation.* Mattresses to be offered for sale with a foundation shall be tested with that foundation. Mattresses to be offered for sale without a foundation shall be tested alone.

(d) *Compliance with this standard.* Each mattress or mattress and foundation set sold or introduced into commerce after [the effective date of this standard] shall meet the test criteria specified in paragraph (b) of this section and otherwise comply with all applicable requirements of this part 1633.

§ 1633.4 Prototype testing requirements.

(a) Except as otherwise provided in paragraph (b) of this section, each manufacturer shall cause three specimens of each prototype to be tested according to § 1633.7 and obtain passing test results according to § 1633.3(b) before selling or introducing into commerce any mattress or mattress and foundation set based on that prototype, unless the manufacturer complies with the prototype pooling and confirmation testing requirements in § 1633.5.

(b) Notwithstanding the requirements of paragraph (a) of this section, a manufacturer may sell or introduce into commerce a mattress or mattress and foundation set based on a prototype that has not been tested according to § 1633.3(b) if that prototype differs from a qualified prototype only with respect to:

(1) Mattress/foundation size (*e.g.*, twin, queen, king);

(2) Ticking, unless the ticking of the qualified prototype has characteristics (such as chemical treatment or special fiber composition) designed to improve performance on the test prescribed in this part; and/or

(3) The manufacturer can demonstrate, on an objectively reasonable basis, that a change in any component, material, or method of construction will not cause the prototype to exceed the test criteria specified in § 1633.3(b).

(c) All tests must be conducted on specimens that are no smaller than a twin size, unless the largest size mattress or mattress and foundation set produced is smaller than a twin size, in which case the largest size must be tested.

(d)(1) If each of the three specimens meets both the criteria specified in § 1633.3(b), the prototype shall be qualified. If any one (1) specimen fails to meet the test criteria of § 1633.3(b), the prototype is not qualified.

(2) Any manufacturer may produce mattresses and foundations, if any, for sale in reliance on prototype tests performed before [the effective date of this Standard], provided that such tests were conducted in accordance with all requirements of this section and § 1633.7 and yielded passing results according to the test criteria of § 1633.3(b).

§ 1633.5 Prototype pooling and confirmation testing requirements.

(a) *Prototype pooling.* One or more manufacturers may rely on a prototype produced by another manufacturer provided that:

(1) The prototype meets the requirements of § 1633.4; and

(2) The mattresses or mattress and foundation sets being produced based on the prototype have components, materials, and methods of construction that are identical in all material respects to the prototype except as otherwise permitted by § 1633.4(b).

(b) *Confirmation testing.* Any manufacturer (''Manufacturer B'') producing mattresses or mattress and foundation sets in reliance on a prototype produced by another manufacturer (''Manufacturer A'') shall

cause to be tested in accordance with § 1633.7 at least one (1) specimen produced by Manufacturer B of each prototype of Manufacturer A upon which said Manufacturer B is relying. The tested specimen must meet the criteria under § 1633.3(b) before Manufacturer B may sell or introduce any mattresses or mattress and foundation sets based on the pooled prototype.

(c) *Confirmation test failure*. (1) If the confirmation test specimen fails to meet the criteria of § 1633.3(b), the manufacturer thereof shall not sell any mattress or mattress and foundation set based on the same prototype until that manufacturer takes corrective measures, tests a new specimen, and the new specimen meets the criteria of § 1633.3(b).

(2) If a confirmation test specimen fails to meet the criteria of § 1633.3(b), the manufacturer thereof must notify the manufacturer of the prototype of the test failure.

§ 1633.6 Quality assurance requirements.

(a) *Quality assurance*. Each manufacturer shall implement a quality assurance program to ensure that mattresses and mattress and foundation sets manufactured for sale are identical in all material respects to the prototype on which they are based. At a minimum these procedures shall include:

(1) Controls, including incoming inspection procedures, of all mattress and mattress and foundation set components and materials to ensure that they are identical in all material respects to those used in the prototype;

(2) Designation of a production lot that is represented by the prototype; and

(3) Inspection of mattresses and mattress and foundation sets produced for sale sufficient to demonstrate that they are identical to the prototype in all material respects.

(b) *Production testing*. Manufacturers are encouraged to conduct, as part of the quality assurance program, random testing of mattresses and mattress and foundation sets being produced for sale according to the requirements of §§ 1633.3 and 1633.7.

(c) *Failure of mattresses produced for sale to meet flammability standard*. (1) *Sale of mattresses and foundations*. If any test performed for quality assurance yields results which indicate that any mattress or mattress and foundation set of a production lot does not meet the criteria of § 1633.3(b), or if a manufacturer obtains test results or other evidence that a component or material or construction/assembly process used could negatively affect the test performance of the mattress as set forth in § 1633.3(b), the manufacturer shall cease production and distribution in commerce of such mattresses and/or mattress and foundation sets until corrective action is taken.

(2) *Corrective actions*. A manufacturer must take corrective action when any mattress or mattress and foundation set is manufactured or imported for sale fails to meet the flammability test criteria set forth in § 1633.3(b).

§ 1633.7 Mattress test procedure.

(a) *Apparatus and test materials* (1) *Calorimetry*. The rate of heat release must be measured by means of oxygen consumption calorimetry. The calibration should follow generally accepted practices for calibration. The calorimetry system shall be calibrated at a minimum of two (2) calibration points, at 75 kW and 200 kW.

(2) *Testroom*. The testroom must have either Test Configuration A or B.

(i) *Test Configuration A*. (an *open calorimeter* (or *furniture calorimeter*)). In this configuration, the specimen to be tested is placed under the center of an open furniture calorimeter. Figure 1 of this part shows the test assembly atop a bedframe and catch surface. The specimen shall be placed under an open hood which captures the entire smoke plume and is instrumented for heat release rate measurements. The area surrounding the test specimen in an open calorimeter layout shall be sufficiently large that there are no heat re-radiation effects from any nearby materials or objects. The air flow to the test specimen should be symmetrical from all sides. The air flow to the calorimeter hood shall be sufficient to ensure that the entire fire plume is captured, even at peak burning. Skirts may be placed on the hood periphery to help assure this plume capture, if necessary, though they must not be of such an excessive length as to cause the incoming flow to disturb the burning process. Skirts must also not heat up to the point that they contribute significant re-radiation to the test specimen. The air supply to the hood shall be sufficient that the fire is not in any way limited or affected by the available air supply. The fire plume should not enter the hood exhaust duct. Brief (seconds) flickers of flame that occupy only a minor fraction of the hood exhaust duct inlet cross-section are not a problem since they do not signify appreciable suppression of flames.

(ii) *Test Configuration B*. The test room shall have dimensions 3.05 meters (m) ± 25 millimeters (mm) by 3.66 m ± 25 mm by 2.44 m ± 25 mm (10 feet (ft) by 12 ft by 8 ft) high. The specimen is placed within the burn room. All smoke exiting from the room is caught by a hood system instrumented for heat release rate measurements. The room shall have no openings permitting air infiltration other than a doorway opening 0.97 m ± 6.4 mm by 2.03 m ± 6.4 mm (38 in by 80 in) located as indicated in Figure 2 of this part and other small openings as necessary to make measurements. Construct the test room of wood or metal studs and line it with fire-rated wallboard or calcium silicate board. Position an exhaust hood outside of the doorway so as to collect all of the combustion gases. There shall be no obstructions in the air supply to the set-up.

(2) *Location of test specimen*. The location of the test specimen is shown in Figure 2 of this part. The angled placement is intended to minimize the interaction of flames on the side surfaces of the test specimen with the room walls. One corner of the test specimen shall be 13 centimeters (cm) to 17 cm from the wall and the other corner shall be 25 cm to 30 cm from the wall. The test room shall contain no other furnishings or combustible materials except for the test specimen.

(3) *Bed frame*. For twin size mattresses, the specimen shall be placed on top of a welded bed frame (1.90 m by 0.99 m by 115 mm high; 75 in by 39 in by 4.5 in high) made from 38 mm (1.5 in) steel angle. The frame shall be completely open under the foundation except for two crosspieces, 25 mm wide (1 in) at the ⅓ length points. If testing a size other than twin, the relationship of the mattress to the frame shall be comparable to that specified in this paragraph.

(4) *Catch pan*. The bed frame feet shall rest on a surface of either calcium silicate board or fiber cement board, 13 mm (0.5 in) thick, 2.11 m by 1.19 m (83 in by 47 in). The board serves as a catch surface for any flaming melt/drip material falling from the bed assembly and may be the location of a pool fire that consumes such materials. This surface must be cleaned between tests to avoid build-up of combustible residues. Lining this surface with aluminum foil to facilitate cleaning is not recommended since this might increase fire intensity via reflected radiation.

(5) *Ignition source*. (i) *General*. The ignition source shall consist of two T-shaped burners as shown in Figures 3 and 4 of this part. One burner impinges flames on the top surface of the mattress. The second burner impinges flames on the side of the mattress and on the side of the foundation. Each of the burners shall be constructed from stainless steel tubing (12.7 mm diameter with 0.89 ± 0.5 mm wall thickness; 0.50

in diameter with 0.035 ± 0.002 in wall). Each burner shall incorporate a stand-off foot to set its distance from the test specimen surface (Figure 5 of this part). Both burners shall be mounted with a mechanical pivot point but the side burner is locked in place to prevent movement about this pivot in normal usage. The top burner, however, is free to rotate about its pivot during a burner exposure and is lightly weighted so as to exert a downward force on the mattress top through its stand-off foot so that the burner follows a receding top surface on the test specimen (Figure 6 of this part). The combination of burner stand-off distance and propane gas flow rate to the burners determines the heat flux they impose on the surface of the test specimen so that both of these parameters are tightly controlled.

(ii) *Top surface burner*. The T head of the top surface burner (horizontal burner, Figure 3 of this part) shall be 305 ± 2 mm (12 ± 0.08 in) long with gas tight plugs in each end. Each side of the T shall contain 17 holes equally spaced over a 135 mm length (8.5 mm ± 0.1 mm apart; 0.333 ± 0.005 in). The holes on each side shall begin 8.5 mm (0.33 in) from the centerline of the burner head. The holes shall be drilled with a #56 drill and are to be 1.17 mm to 1.22 mm (0.046 in to 0.048 in) in diameter. The holes shall be pointed 5° out of the plane of the Figure. This broadens the width of the heat flux profile imposed on the surface of the test specimen.

(iii) *Side surface burner*. The T head of the side surface burner (vertical burner) shall be constructed similarly to the top surface burner, as shown in Figure 4 of this part, except that its overall length shall be 254 ± 2 mm (10 ± 0.08 in). Each side of the burner head shall contain 14 holes spaced evenly over a 110 mm length (8.5 mm ± 0.1 mm apart; 0.333 ± 0.005 in). The holes shall be drilled with a #56 drill and are to be 1.17 mm to 1.22 mm (0.046 in to 0.048 in) in diameter. The holes shall be pointed 5° out of the plane of the Figure.

(iv) *Burner stand-off*. The burner stand-off on each burner shall consist of a collar fixed by a set screw onto the inlet tube of the burner head (Figure 5 of this part). The collar shall hold a 3 mm diameter stainless steel rod having a 12.7 mm by 51 mm by (2–2.5 mm) thick (0.5 in by 2 in by (0.08–0.10) in thick) stainless steel pad welded on its end with its face (and long axis) parallel to the T head of the burner. The foot pad shall be displaced about 10 mm to 12 mm from the longitudinal centerline of the burner head so that it does not rest on the test specimen in an area of peak heat flux. A short section (9.5 mm outer diameter (''OD''), about 80 mm long; ⅜ in OD, about 3.2 in long) of copper tubing shall be placed in the inlet gas line just before the burner to facilitate making the burner nominally parallel to the test specimen surface (by a procedure described in this paragraph). The copper tube on the top surface burner must be protected from excessive heat and surface oxidation by wrapping it with a suitable layer of high temperature insulation. Both copper tubes are to be bent by hand in the burner alignment process. They must be replaced if they become work-hardened or crimped in any way. The gas inlet lines (12.7 mm OD stainless steel tubing; 0.50 in) serve as arms leading back to the pivot points and beyond, as shown in Figure 6 of this part. The length to the pivot for the top burner shall be approximately 1000 mm (40 in).

(v) *Frame*. Figure 6 shows the frame that holds the burners and their pivots, which are adjustable vertically in height. All adjustments (burner height, burner arm length from the pivot point, counterweight positions along the burner arm) are facilitated by the use of knobs or thumbscrews as the set screws. The three point footprint of the burner frame, with the two forward points on wheels, facilitates burner movement and burner stability when stationary.

(vi) *Arms*. The metal arms attached to the burners shall be attached to a separate gas control console by flexible, reinforced plastic tubing.[1] The gas control console is mounted separately so as to facilitate its safe placement outside of the test room throughout the test procedure. The propane gas lines running between the console and the burner assembly must be anchored on the assembly before running to the burner inlet arms. A 1.5 m ± 25 mm (58 in ± 1 in) length of flexible, reinforced tubing between the anchor point and the end of each burner inlet allows free movement of the top burner about its pivot point. The top burner arm shall have a pair of moveable cylindrical counterweights that are used, as described below, to adjust the downward force on the stand-off foot.

(vii) *Burner head*. Each burner head shall have a separate pilot light consisting of a 3 mm OD (⅛in OD) copper tube with an independently-controlled supply of propane gas. The tube terminates within 10 mm of the center of the burner head. Care must be taken to set the pilot flame size small enough so as not to heat the test specimen before the timed burner exposure is begun.

(viii) *Flow control system*. Each burner shall have a flow control system of the type shown in Figure 7 of this part. Propane gas from a source such as a bottle is reduced in pressure to approximately 70 kilopascals (''kPa'') (20 pounds per square inch gage (''psig'')) and fed to the system shown in Figure 8 of this part. The gas flow to the burner is delivered in a square-wave manner (constant flow with rapid onset and termination) by means of the solenoid valve upstream of the flowmeter. An interval timer (accurate to ± 0.2 s) determines the burner flame duration. The pilot light assures that the burner will ignite when the solenoid valve opens[2]. The gas flow shall be set using a rotameter type of flowmeter, with a 150 mm scale, calibrated for propane. When calibrating the flowmeter, take into account that the flow resistance of the burner holes causes a finite pressure increase in the flowmeter above ambient. (If a calibration at one atmosphere is provided by the manufacturer, the flowmeter reading, at the internal pressure existing in the meter, required to get the flow rates listed in this paragraph must be corrected, typically by the square root of the absolute pressure ratio. This calls for measuring the actual pressure in the flow meters when set near the correct flow values. A value roughly in the range of 1 kPa to 3 kPa—5 in to 15 in of water—can be expected.) Useful guidelines for calibration are provided in Appendix A of this part.

(ix) *Gas flow rate*. Use propane gas with a known net heat of combustion of 46.5 ± 0.5 MJ/kg (nominally 99% to 100% propane). Each burner has a specific propane gas flow rate set with its respective, calibrated flowmeter. The gas flow rate to the top burner is 12.9 liters per minute (''L/min'') ± 0.1 L/min at a pressure of 101 ± 5 kPa (standard atmospheric pressure) and a temperature of 22 ± 3 °C. The gas flow rate to the side burner is 6.6 ± 0.05 L/min at a pressure of 101 ± 5 kPa (standard atmospheric pressure) and a temperature of 22 ± 3 °C. For the flowmeters supplied with the burner assembly, the black float setting for the top burner is expected to be in the 85 mm to 95 mm range. For the *side* burner, the expected range for the black float is 115 m to 125 mm. The total heat release rate of the burners is 27 kW.

[1] Fiber-reinforced plastic tubing (6 mm ID by 9.5 mm OD; ¼ inch ID by ¾ inch OD) made of PVC should be used.

[2] If the side burner, or more commonly one half of the side burner, fails to ignite quickly, adjust the position of the igniter, bearing in mind that propane is heavier than air. The best burner behavior test assessment is done against an inert surface (to spread the gas as it would during an actual test).

(b) *Conditioning.* Remove the specimens from any packaging prior to conditioning. Specimens shall be conditioned in air at a temperature greater than 18 °C (65 °F) and a relative humidity less than 55 percent for at least 48 continuous hours prior to test. Specimens shall be supported in a manner to permit free movement of air around them during conditioning.

(c) *Test preparation.* (1) *General.* Horizontal air flow at a distance of 0.5 m (20 in) on all sides of the test specimen at the mattress top height shall be ≤ 0.5 m/s. If there is any visual evidence that the burner flames are being shifted around during their exposure durations, the burner regions must be enclosed on two or more sides by at least a triple layer of screen wire. The screen(s) for the top burner shall sit on the mattress top but must be far enough away (typically 30 cm or more) so as not to interfere or interact with flame spread during the burner exposure. The screen for the side burner will require a separate support from below. All screens shall be removed at the end of the 70 second exposure interval.

(2) *Specimen.* Remove the test specimen from the conditioning room immediately before it is to be tested. Be sure the bed frame is approximately centered on the catch surface. Place the specimen on the bed frame. Carefully center them on the bed frame and on each other. The mattress shall be centered on top of the foundation (see Figure 1 of this part). However, in order to keep the heat flux exposure the same for the sides of the two components, if the mattress is 1 cm to 2 cm narrower than the foundation, the mattress shall be shifted so that the side to be exposed is in the same plane as the foundations. Refer to Figure 8 of this part. A product having an intended sleep surface on only one side shall be tested with the sleeping side up so that the sleeping surface is exposed to the propane burner.

(d) *Burner flow rate/flow timer confirmation.* Just prior to moving the burner adjacent to the test specimen, briefly ignite each burner at the same time, and check that the propane flow to that burner is set at the appropriate level on its flowmeter to provide the flows listed in paragraph (a)(5)(ix) of this section. Check that the timers for the burner exposures are set to 70 seconds for the top burner and 50 seconds for the side burner. For a new burner assembly, check the accuracy of the gas flow timers against a stop watch at these standard time settings. Set pilot flows to a level that will not cause them to impinge on sample surfaces.

(e) *Location of the gas burners.* Place the burner heads so that they are within 300 mm (1 ft) of the mid-length of the mattress. The general layout for the room configuration is shown in Figure 2 of this part. For a quilted mattress top the stand-off foot pad must alight on a high, flat area between dimples or quilting thread runs. The same is to be true for the side burner if that surface is quilted. If a specimen design presents a conflict in placement such that both burners cannot be placed between local depressions in the surface, the top burner shall be placed at the highest flat surface.

(f) *Burner set-up.* The burners shall be placed in relation to the mattress and foundation surfaces in the manner shown in Figure 9 of this part, *i.e.*, at the nominal spacings shown there and with the burner tubes nominally parallel [3] to the mattress surfaces on which they impinge. Since the heat flux levels seen by the test specimen surfaces depend on burner spacing, as well as gas flow rate, care must be taken with the set-up process.

(g) *Burner alignment procedure.* (1) *Preparation.* Complete the following before starting the alignment procedure:

(i) Check that the pivot point for the mattress top burner feed tube and the two metal plates around it are clean and well-lubricated so as to allow smooth, free movement.

(ii) Set the two burners such that the 5° out-of-plane angling of the flame jets makes the jets on the two burners point slightly *toward* each other.

(iii) Check the burner stand-off feet for straightness and perpendicularity between foot pad and support rod and to see that they are clean of residue from a previous test.

(iv) Have at hand the following items to assist in burner set-up: the jig, shown in Figure 10 of this part, for setting the stand-off feet at their proper distances from the front of the burner tube; a 3 mm thick piece of flat stock (any material) to assist in checking the parallelness of the burners to the mattress surfaces; and a 24 gage stainless steel sheet metal platen that is 30 mm (12 in) wide, 610 mm (24 in) long and has a sharp, precise 90° bend 355 mm (14 in) from one 30 mm wide end.

(2) *Alignment.* (i) Place the burner assembly adjacent to the test specimen. Place the sheet metal platen on the mattress with the shorter side on top. The location shall be within 30 cm (1 ft) of the longitudinal center of the mattress. The intended location of the stand-off foot of the top burner shall not be in a dimple or crease caused by the quilting of the mattress top. Press the platen laterally inward from the edge of the mattress so that its side makes contact with either the top and bottom tape edge or the vertical side of the mattress.[4] Use a 20 cm (8 in) strip of duct tape (platen to mattress top) to hold the platen firmly inward in this position.

(ii) With both burner arms horizontal (pinned in this position), fully retract the stand-off feet of both burners and, if necessary, the pilot tubes as well [5]. (Neither is to protrude past the front face of the burner tubes at this point.) Move the burner assembly forward (perpendicular to the mattress) until the vertical burner lightly contacts the sheet metal platen. Adjust the height of the vertical burner on its vertical support column so as to center the tube on the crevice between the mattress and the foundation. (This holds also for pillow top mattress tops, *i.e.*, ignore the crevice between the pillow top and the main body of the mattress.) [6] Adjust the height of the horizontal burner until it sits lightly on top of the sheet metal platen. Its burner arm should then be horizontal.

(iii) Move the horizontal burner in/out (loosen the thumb screw near the pivot point) until the outer end of the burner tube is 13 mm to 19 mm (½ in to ¾ in) from the corner bend in the platen (this is facilitated by putting a pair of lines on the top of the platen 13 mm and 19 mm from the bend and parallel to it). Tighten the thumb screw.

(iv) Make the horizontal burner parallel to the top of the platen (within 3 mm, ⅛ in over the burner tube length) by bending the copper tube section

[3] The top burner will tend to be tangential to the mattress surface at the burner mid-length; this orientation will not necessarily be parallel to the overall average mattress surface orientation nor will it necessarily be horizontal. This is a result of the shape of the mattress top surface.

[4] Mattresses having a convex side are treated separately since the platen cannot be placed in the above manner. Use the platen only to set the top burner parallelness. Set the in/out distance of the top burner to the specification in the paragraph (g)(2)(iii). Set the side burner so that it is approximately (visually) parallel to the flat side surface of the foundation below the mattress/foundation crevice once its foot is in contact with the materials in the crevice area. The burner will not be vertical in this case. If the foundation side is also non-flat, set the side burner vertical (± 3 mm, as above) using a bubble level as a reference. The side surface convexities will then bring the bowed out sections of the specimen closer to the burner tube than the stand-off foot.

[5] The pilot tubes can normally be left with their ends just behind the plane of the front of the burner tube. This way they will not interfere with positioning of the tube but their flame will readily ignite the burner tubes.

[6] For tests of the mattress alone, set the side burner mid-height equal to the lower tape edge of the mattress.

appropriately. Note: After the platen is removed in paragraph (g)(2)(vii), the burner tube may not be horizontal; this is normal. For mattress/foundation combinations having nominally flat, vertical sides, the similar adjustment for the vertical burner is intended to make that burner parallel to the sides and vertical. Variations in the shape of mattresses and foundations can cause the platen section on the side to be non-flat and/or non-vertical. If the platen is flat and vertical, make the vertical burner parallel to the side of the platen (± 3 mm) by bending its copper tube section as needed. If not, make the side burner parallel to the mattress/foundation sides by the best visual estimate after the platen has been removed.

(v) Move the burner assembly perpendicularly back away from the mattress about 30 cm (1 ft). Set the two stand-off feet to their respective distances using the jig designed for this purpose. Install the jig *fully* onto the burner tube (on the *same side* of the tube as the stand-off foot), with its side edges parallel to the burner feed arm, at about the position where one end of the foot will be. Loosen the set screw and slide the foot out to the point where it is flush with the bottom end of the jig. Tighten the set screw. Make sure the long axis of the foot is parallel to the burner tube. It is essential to use the correct side of the spacer jig with each burner. Double check this. The jig must be clearly marked.

(vi) Set the downward force of the horizontal burner. Remove the retainer pin near the pivot. While holding the burner feed arm horizontal using a spring scale [7] hooked onto the thumbscrew holding the stand-off foot, move the small and/or large weights on the feed tube appropriately so that the spring scale reads 170 g to 225 g (6 oz to 8 oz).

(vii) Remove the sheet metal platen (and tape holding it).

(viii) Hold the horizontal burner up while sliding the burner assembly forward until its stand-off foot just touches the mattress and/or the foundation [8], then release the horizontal burner. The outer end of the burner tube should extend at least 6 mm to 12 mm (¼ in to ½ in) out beyond the uppermost corner/edge of the mattress so that the burner flames will hit the tape edge. (For a pillow top mattress, this means the outer edge of the pillow top portion and the distance may then be greater than 6 mm to 12 mm.) If this is not the case, move the burner assembly (perpendicular to the mattress side)—not the horizontal burner alone—until it is. Finally, move the vertical burner tube until its stand-off foot just touches the side of the mattress and/or the foundation. (Use the set screw near the vertical burner pivot.)

(ix) Make sure all thumbscrews are adequately tightened. Care must be taken, once this set-up is achieved, to avoid bumping the burner assembly or disturbing the flexible lines that bring propane to it.

(x) If there is *any* indication of flow disturbances in the test facility which cause the burner flames or pilot flames to move around, place screens around the burners so as to minimize these disturbances [9]. These screens (and any holders) must be far enough away from the burners (about 30 cm or more for the top, less for the side) so that they do not interact with the flames growing on the specimen surfaces. For the top surface burner, at least a triple layer of window screen approximately 30 cm high sitting vertically on the mattress top (Figure 9 of this part) has proved satisfactory. For the side burner at least a triple layer of screen approximately 15 cm wide, formed into a square-bottom U-shape and held from below the burner has proved satisfactory. Individual laboratories will have to experiment with the best arrangement for suppressing flow disturbances in their facility.

(xi) Proceed with the test (*see* Test Procedure in paragraph (h) of this section and Appendix B of this part).

(h) *Running the test.* (1) Charge the hose line to be used for fire suppression with water.

(2) Ignite the pilot lights on both burners and make sure they are small enough as to not heat the test specimen surfaces significantly.

(3) With the calorimetry system fully operational, after instrument zeroes and spans, start the video lights and video camera and data logging systems two minutes before burner ignition (or, if not using video, take a picture of the setup).

(4) Start the burner exposure by activating power to the burner timers. Also start a 30 minute timer of the test duration. If not using video, one photo must be taken within the first 45 seconds of starting the burners.

(5) When the burners go out (after 70 seconds for the longer exposure), carefully lift the top burner tube away from the specimen surface, producing as little as possible disturbance to the specimen. Remove the burner assembly from the specimen area to facilitate the video camera view of the full side of the specimen. In the case of the room-based configurations, remove the burner assembly from the room to protect it. Remove all screens.

(i) *Video recording/photographs.* Place a video or still frame camera so as to have (when the lens is zoomed out) just slightly more than a full-length view of the side of the test specimen being ignited, including a view of the flame impingement area while the burner assembly is present. The view must also include the catch pan so that it is clear whether any melt pool fire in this pan participates significantly in the growth of fire on the test specimen. The camera shall include a measure of elapsed time to the nearest 1 second for video and 1 minute for still frame within its recorded field of view (preferably built-in to the camera). For the room-based configuration, the required full-length view of the sample may require an appropriately placed window, sealed with heat resistant glass, in one of the room walls. Place the camera at a height just sufficient to give a view of the top of the specimen while remaining under any smoke layer that may develop in the room. The specimen shall be brightly lit so that the image does not lose detail to over-exposed flames. This will require a pair or more of 1 kW photo flood lights illuminating the viewed side of the specimen. The lights may need to shine into the room from the outside via sealed windows.

(j) *Cessation of test.* (1) The heat release rate shall be recorded and video/photographs taken until either 30 minutes has elapsed since the start of the burner exposure or a fire develops of such size as to require suppression for the safety of the facility.

(2) Note the time and nature of any unusual behavior that is not fully within the view of the video camera. This is most easily done by narration to a camcorder.

(3) Run the heat release rate system and datalogger until the fire has been

[7] An acceptable spring scale has a calibrated spring mounted within a holder and hooks on each end.

[8] The foot should depress the surface it first contacts by no more than 1 mm to 2 mm. This is best seen up close, not from the rear of the burner assembly. However, if a protruding tape edge is the first item contacted, compress it until the foot is in the plane of the mattress/foundation vertical sides. The intent here is that the burner be spaced a fixed distance from the vertical mattress/foundation sides, not from an incidental protrusion. Similarly, if there is a wide crevice in this area which would allow the foot to move inward and thereby place the burners too close to the vertical mattress/foundation sides, it will be necessary to use the spacer jig (rather than the stand-off foot) above or below this crevice to set the proper burner spacing. Compress the mattress/foundation surface 1 mm to 2 mm when using the jig for this purpose.

[9] The goal here is to keep the burner flames impinging on a fixed area of the specimen surface rather than wandering back and forth over a larger area.

fully out for several minutes to allow the system zero to be recorded.

§ 1633.8 Findings.

(a) *General.* In order to issue a flammability standard under the FFA, the FFA requires the Commission to make certain findings and to include these in the regulation, 15 U.S.C. 1193(j)(2). These findings are discussed in this section.

(b) *Voluntary standards.* No findings concerning compliance with and adequacy of a voluntary standard are necessary because no relevant voluntary standard addressing the risk of injury that is addressed by this regulation has been adopted and implemented.

(c) *Relationship of benefits to costs.* The Commission estimates the potential total lifetime benefits of a mattress that complies with this standard to range from $62 to $74 per mattress (based on a 10 year mattress life and a 3% discount rate). The Commission estimates total resource costs of the standard to range from $13 to $44 per mattress. This yields net benefits of $18 to $62 per mattress. The Commission estimates that aggregate lifetime benefits associated with all mattresses produced the first year the standard becomes effective range from $1,560 to $1,880 million, and that aggregate resource costs associated with these mattresses range from $320 to $1,110 million, yielding net benefits of about $450 to $1,560 million. Accordingly, the Commission finds that the benefits from the regulation bear a reasonable relationship to its costs.

(d) *Least burdensome requirement.* The Commission considered the following alternatives: Alternative maximum peak heat release rate and test duration, alternative total heat released in the first 10 minutes of the test, mandatory production testing, a longer effective date, taking no action, relying on a voluntary standard, and requiring labeling alone (without any performance requirements). The alternatives of taking no action, relying on a voluntary standard (if one existed) requiring labeling alone are unlikely to adequately reduce the risk. Requiring a criterion of 25 MJ total heat release during the first 10 minutes of the test instead of 15 MJ would likely reduce the estimated benefits (deaths and injuries reduced) without having much effect on costs. Both options of increasing the duration of the test from 30 minutes to 60 minutes and decreasing the peak rate of heat release from 200 kW to 150 kW would likely increase costs significantly without substantial increase in benefits. Requiring production testing would also likely increase costs. Therefore, the Commission finds that an open flame standard for mattresses with the testing requirements and criteria that are specified in the Commission rule is the least burdensome requirement that would prevent or adequately reduce the risk of injury for which the regulation is being promulgated.

§ 1633.9 Glossary of terms.

(a) *Absorbent pad.* Pad used on top of mattress. Designed to absorb moisture/body fluids thereby reducing skin irritation, can be one time use.

(b) *Basket pad.* Cushion for use in an infant basket.

(c) *Bunk beds.* A tier of beds, usually two or three, in a high frame complete with mattresses (*see* Figure 11 of this part).

(d) *Car bed.* Portable bed used to carry a baby in an automobile.

(e) *Carriage pad.* Cushion to go into a baby carriage.

(f) *Chaise lounge.* An upholstered couch chair or a couch with a chair back. It has a permanent back rest, no arms, and sleeps one (*see* Figure 11).

(g) *Convertible sofa.* An upholstered sofa that converts into an adult sized bed. Mattress unfolds out and up from under the seat cushioning (*see* Figure 11).

(h) *Corner groups.* Two twin size bedding sets on frames, usually slipcovered, and abutted to a corner table. They also usually have loose bolsters slipcovered (*see* Figure 11).

(i) *Crib bumper.* Padded cushion which goes around three or four sides inside a crib to protect the baby. Can also be used in a playpen.

(j) *Daybed.* Daybed has foundation, usually supported by coil or flat springs, mounted between arms on which mattress is placed. It has permanent arms, no backrest, and sleeps one (*see* Figure 11).

(k) *Dressing table pad.* Pad to cushion a baby on top of a dressing table.

(l) *Drop-arm loveseat.* When side arms are in vertical position, this piece is a loveseat. The adjustable arms can be lowered to one of four positions for a chaise lounge effect or a single sleeper. The vertical back support always remains upright and stationary (*see* Figure 11).

(m) *Futon.* A flexible mattress generally used on the floor that can be folded or rolled up for storage. It usually consists of resilient material covered by ticking.

(n) *High riser.* This is a frame of sofa seating height with two equal size mattresses without a backrest. The frame slides out with the lower mattress and rises to form a double or two single beds (*see* Figure 11).

(o) *Infant carrier and lounge pad.* Pad to cushion a baby in an infant carrier.

(p) *Mattress foundation.* This is a ticking covered structure used to support a mattress or sleep surface. The structure may include constructed frames, foam, box springs or other materials used alone or in combination.

(q) *Murphy Bed.* A style of sleep system where the mattress and foundation are fastened to the wall and provide a means to retract or rotate the bed assembly into the wall to release more floor area for other uses.

(r) *Pillow.* Cloth bag filled with resilient material such as feathers, down, sponge rubber, urethane, or fiber used as the support for the head of a person.

(s) *Playpen pad.* Cushion used on the bottom of a playpen.

(t) *Portable crib.* Smaller size than a conventional crib. Can usually be converted into a playpen.

(u) *Quilted* means stitched with thread or by fusion through the ticking and one or more layers of material.

(v) *Roll-away-bed.* Portable bed which has frame that folds with the mattress for compact storage.

(w) *Sleep lounge.* Upholstered seating section is mounted on a frame. May have bolster pillows along the wall as backrests or may have attached headrests (*see* Figure 11).

(x) *Stroller pad.* Cushion used in a baby stroller.

(y) *Sofa bed.* These are pieces in which the back of the sofa swings down flat with the seat to form the sleeping surface. All upholstered. Some sofa beds have bedding boxes for storage of bedding. There are two types: The one-piece, where the back and seat are upholstered as a unit, supplying an unbroken sleeping surface; and the two-piece, where back and seat are upholstered separately (*see* Figure 11).

(z) *Sofa lounge*—(includes glideouts). Upholstered seating section is mounted on springs and in a frame that permit it to be pulled out for sleeping. Has upholstered backrest bedding box that is hinged. Glideouts are single sleepers with sloping seats and backrests. Seat pulls out from beneath back and evens up to supply level sleeping surface (*see* Figure 11).

(aa) *Studio couch.* Consists of upholstered seating section on upholstered foundation. Many types convert to twin beds (*see* Figure 11).

(bb) *Studio divan.* Twin size upholstered seating section with foundation is mounted on metal bed frame. Has no arms or backrest, and sleeps one (*see* Figure 11).

(cc) *Trundle bed.* A low bed which is rolled under a larger bed. In some lines,

the lower bed springs up to form a double or two single beds as in a high riser (*see* Figure 11).

(dd) *Tufted* means buttoned or laced through the ticking and upholstery material and/or core, or having the ticking and loft material and/or core drawn together at intervals by any other method which produces a series of depressions on the surface.

(ee) *Twin studio divan.* Frames which glide out (but not up) and use seat cushions, in addition to upholstered foundation to sleep two. Has neither arms nor back rest (*see* Figure 11).

(ff) *Flip or sleeper chair.* Chair that unfolds to be used for sleeping, typically has several connecting fabric covered, solid foam core segments.

Subpart B—Rules and Requirements

§ 1633.10 Definitions.

(a) *Standard* means the Standard for the Flammability (Open-Flame) of Mattresses and Foundations (16 CFR part 1633, subpart A).

(b) The definition of terms set forth in § 1633.2 of the standard shall also apply to this subpart.

§ 1633.11 Records.

(a) *Test and manufacturing records—General.* Every manufacturer (including importers) or other person initially introducing into commerce mattresses or mattress and foundation sets subject to the standard, irrespective of whether guarantees are issued relative thereto, shall maintain the following records:

(1) Test results and details of each test performed by or for that manufacturer (including failures), whether for prototype, confirmation, or production, in accordance with § 1633.7. Details shall include: Location of test facility, type of test room, test room conditions, prototype or production identification number, and test data including the peak rate of heat release, total heat release in first 10 minutes, a graphic depiction of the peak rate of heat release and total heat release over time. These records shall include the name and signature of person conducting the test, the date of the test, and a certification by the person overseeing the testing as to the test results and that the test was carried out in accordance with the Standard. For confirmation tests, the identification number must be that of the prototype tested.

(2) Video and/or a minimum of eight photographs of the testing of each mattress or mattress and foundation set, in accordance with § 1633.4 (one taken before the test starts, one taken within 45 seconds of the start of the test, and the remaining six taken at five minute intervals, starting at 5 minutes and ending at 30 minutes), with the prototype identification number or production lot identification number of the mattress or mattress foundation set, date and time of test, and name and location of testing facility clearly displayed.

(b) *Prototype records.* In addition to the records specified in paragraph (a) of this section, the following records related to prototype testing shall be maintained:

(1) Unique identification number for the qualified prototype and a list of the unique identification numbers of each prototype based on the qualified prototype.

(2) A detailed description of all materials, components, and methods of construction for each prototype mattress or prototype mattress and foundation set. Such description shall include at a minimum, the specifications of all materials and components, name and location of each material and component supplier, and a physical sample of each material and component of the prototype.

(3) A list of which models and production lots of mattresses or mattress and foundation sets are represented by each prototype identification number.

(4) Where a prototype is not required to be tested before sale, pursuant to § 1633.4(b), the prototype identification number of the qualified prototype on which the mattress to be offered for sale is based, and, at a minimum, the manufacturing specifications and a description of the materials substituted and/or the size change, photographs or physical specimens of the substituted materials, and documentation based on objectively reasonable criteria that the change in any component, material, or method of construction will not cause the prototype to exceed the test criteria specified in § 1633.3(b).

(5) Identification, composition, and details of the application of any flame retardant treatments and/or inherently flame resistant fibers or other materials employed in mattress components.

(c) *Pooling confirmation test records.* With respect to pooling confirmation testing, records shall be maintained to show:

(1) The prototype identification number assigned by the original prototype manufacturer.

(2) Name and location of the prototype manufacturer.

(3) Copy of prototype test records, and records required by paragraph (b)(2) of this section.

(4) A list of models of mattresses, and/or mattress and foundation sets, represented by the prototype.

(d) *Quality assurance records.* In addition to the records required by paragraph (a) of this section, the following quality assurance records shall be maintained:

(1) A written copy of the manufacturer's quality assurance procedures.

(2) Records of any production tests performed. Production test records must be maintained and shall include in addition to the requirements of paragraph (a) of this section, an assigned production lot identification number and the identification number of the prototype associated with the specimen tested.

(3) For each prototype, the number of mattresses or mattress and foundation sets in each production lot based on that prototype.

(4) The duration of manufacture of the production lot, *i.e.*, the start and end dates of production of that lot.

(5) Component, material and assembly records. Every manufacturer conducting tests and/or technical evaluations of components and materials and/or methods of construction must maintain detailed records of such tests and evaluations.

(e) *Record retention requirements.* The records required under this section shall be maintained by the manufacturer (including importers) for as long as mattresses/foundations based on the prototype in question are in production and shall be retained for 3 years thereafter. Records shall be available upon the request of Commission staff.

§ 1633.12 Labeling.

(a) Each mattress or mattress/foundation set subject to the standard shall bear a permanent, conspicuous, and legible label containing:

(1) Name of the manufacturer;

(2) Location of the manufacturer, including street address, city and state;

(3) Month and year of manufacture;

(4) Model identification;

(5) Prototype identification number for the mattress; and

(6) A certification that the mattress complies with this standard.

(b) The information required on labels by this section shall be set forth separately from any other information appearing on such label. Other information, representations, or disclosures, appearing on labels required by this section or elsewhere on the item, shall not interfere with, minimize, detract from, or conflict with the required information.

(c) No person, other than the ultimate consumer, shall remove or mutilate, or cause or participate in the removal or mutilation of, any label required by this section to be affixed to any item.

§ 1633.13 Tests for guaranty purposes, compliance with this section, and one of a kind exemption.

(a) *Tests for guaranty purposes.* Reasonable and representative tests for the purpose of issuing a guaranty under section 8 of the Flammable Fabrics Act, 15 U.S.C. 1197, for mattresses or mattress and foundation sets subject to the standard shall be the tests performed to show compliance with the standard.

(b) *Compliance with this section.* No person subject to the Flammable Fabrics Act shall manufacture for sale, import, distribute, or otherwise market or handle any mattress or mattress and foundation set which is not in compliance with the provisions under subpart B of this part.

(c) ''*One of a kind'' exemption for physician prescribed mattresses.* (1)(i) A mattress or mattress and foundation set manufactured in accordance with a physician's written prescription or manufactured in accordance with other comparable written medical therapeutic specification, to be used in connection with the treatment or management of a named individual's physical illness or injury, shall be considered a ''one of a kind mattress'' and shall be exempt from testing under the standard pursuant to § 1633.7 thereof: Provided, that the mattress or mattress and foundation set bears a permanent, conspicuous and legible label which states:

WARNING: This mattress or mattress and foundation set may be subject to a large fire if exposed to an open flame. It was manufactured in accordance with a physician's prescription and has not been tested under the Federal Standard for the Flammability (Open-Flame) of Mattresses and Foundation Sets (16 CFR part 1633).

(ii) Such labeling must be attached to the mattress or mattress and foundation set so as to remain on or affixed thereto for the useful life of the mattress or mattress and foundation set. The label must be at least 40 square inches (250 sq. cm) with no linear dimension less than 5 inches (12.5 cm). The letters in the word ''WARNING'' shall be no less than 0.5 inch (1.27 cm) in height and all letters on the label shall be in a color which contrasts with the background of the label. The warning statement which appears on the label must also be conspicuously displayed on the invoice or other sales papers that accompany the mattress in commerce from the manufacturer to the final point of sale to a consumer.

(2) The manufacturer of a mattress or mattress and foundation set exempted from testing under this paragraph shall, in lieu of the records required to be kept by §1633.10, retain a copy of the written prescription or other comparable written medical therapeutic specification for such mattress during a period of three years, measured from the date of manufacture.

(3) For purposes of this subpart the term physician shall mean a physician, chiropractor or osteopath licensed or otherwise permitted to practice by any State of the United States.

Subpart C—Interpretations and Policies

§ 1633.14 Policy clarification on renovation of mattresses.

(a) Section 3 of the Flammable Fabrics Act (15 U.S.C. 1192) prohibits, among other things, the ''manufacture for sale'' of any product which fails to conform to an applicable standard issued under the Act. The standard for the Flammability (Open-Flame) of Mattresses and Foundations in subpart A of this part, issued pursuant to the Act, provides that, with certain exceptions, mattresses must be tested according to a prescribed method. The standard does not exempt renovation; nor does it specifically refer to renovation.

(b) The purpose of this subpart is to inform the public that mattresses renovated for sale are considered by the Commission to be mattresses manufactured for sale and, therefore, subject to the requirements of the open-flame Mattress Standard. The Commission believes that this policy clarification will better protect the public against the unreasonable risk of fires leading to death, personal injury or significant property damage, and assure that purchasers of renovated mattresses receive the same protection under the Flammable Fabrics Act as purchasers of new mattresses.

(c) For purposes of this subpart, mattress renovation includes a wide range of operations. Replacing the ticking or batting, stripping a mattress to its springs, rebuilding a mattress, or replacing components with new or recycled materials, are all part of the process of renovation. Any one, or any combination of one or more, of these steps in mattress renovation is considered to be mattress manufacture.

(d) If the person who renovates the mattress intends to retain the renovated mattress for his or her own use, or if a customer or a renovator merely hires the services of the renovator and intends to take back the renovated mattress for his or her own use, ''manufacture for sale'' has not occurred and such a renovated mattress is not subject to the mattress standard.

(e) However, if a renovated mattress is sold or intended for sale, either by the renovator or the owner of the mattress who hires the services of the renovator, such a transaction is considered to be ''manufacture for sale''.

(f) Accordingly, mattress renovation is considered by the Commission to be ''manufacture for sale'' and, therefore, subject to the open-flame Mattress Standard, when renovated mattresses are sold or intended for sale by a renovator or the customer of the renovator.

(g) A renovator who believes that certain mattresses are entitled to one-of-a-kind exemption, may present relevant facts to the Commission and petition for an exemption. Renovators are expected to comply with all the testing requirements of the open-flame Mattress Standard until an exemption is approved.

BILLING CODE 6355–01–P

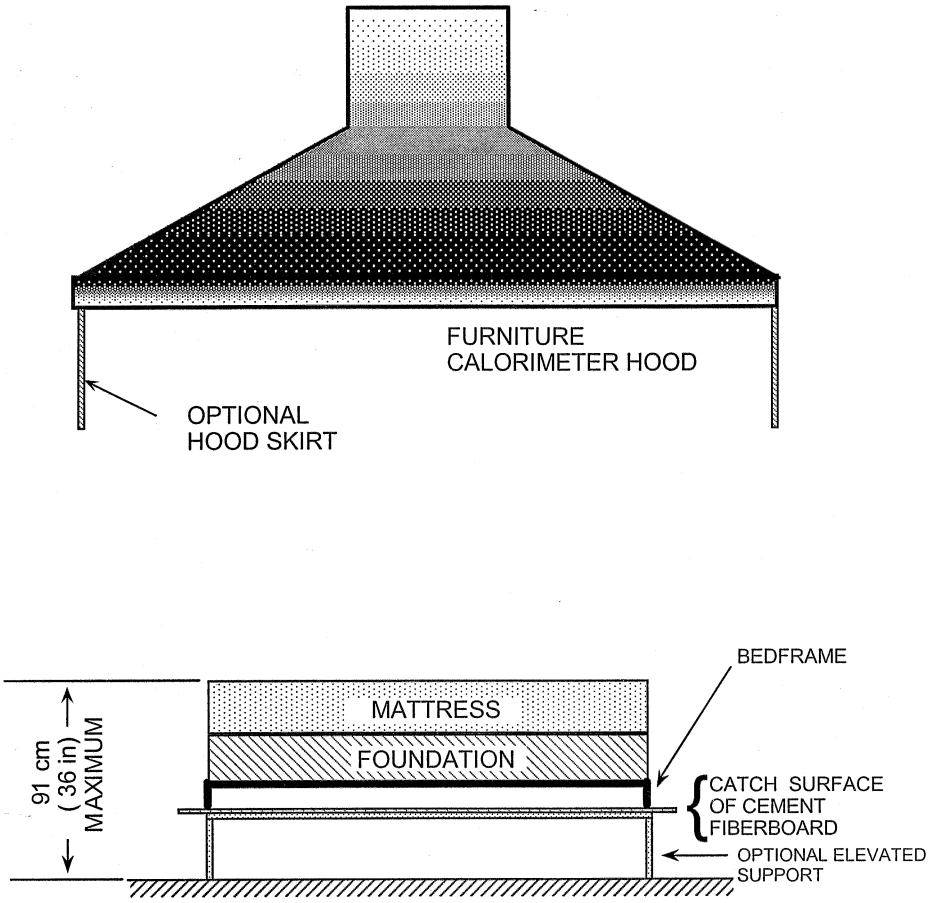

FIGURE 1. TEST ASSEMBLY, SHOWN IN FURNITURE CALORIMETER. (CONFIGURATION A.)

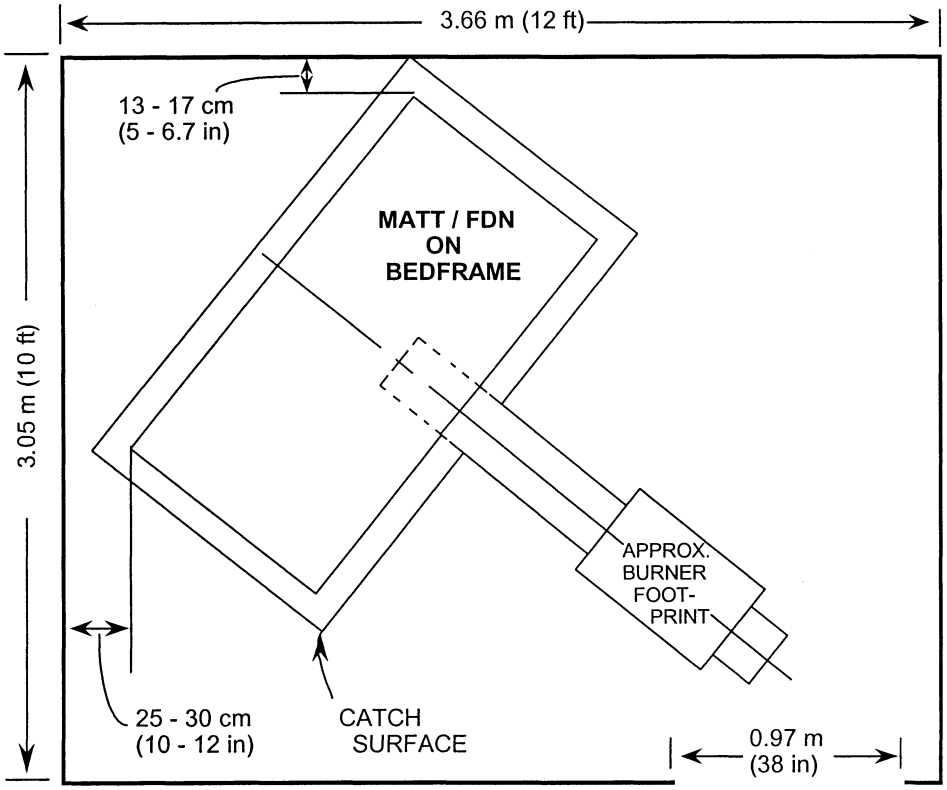

FIGURE 2. TEST ARRANGEMENT IN 3.05m X 3.66 m (10 ft x 12 ft) ROOM; CONFIGURATION B.

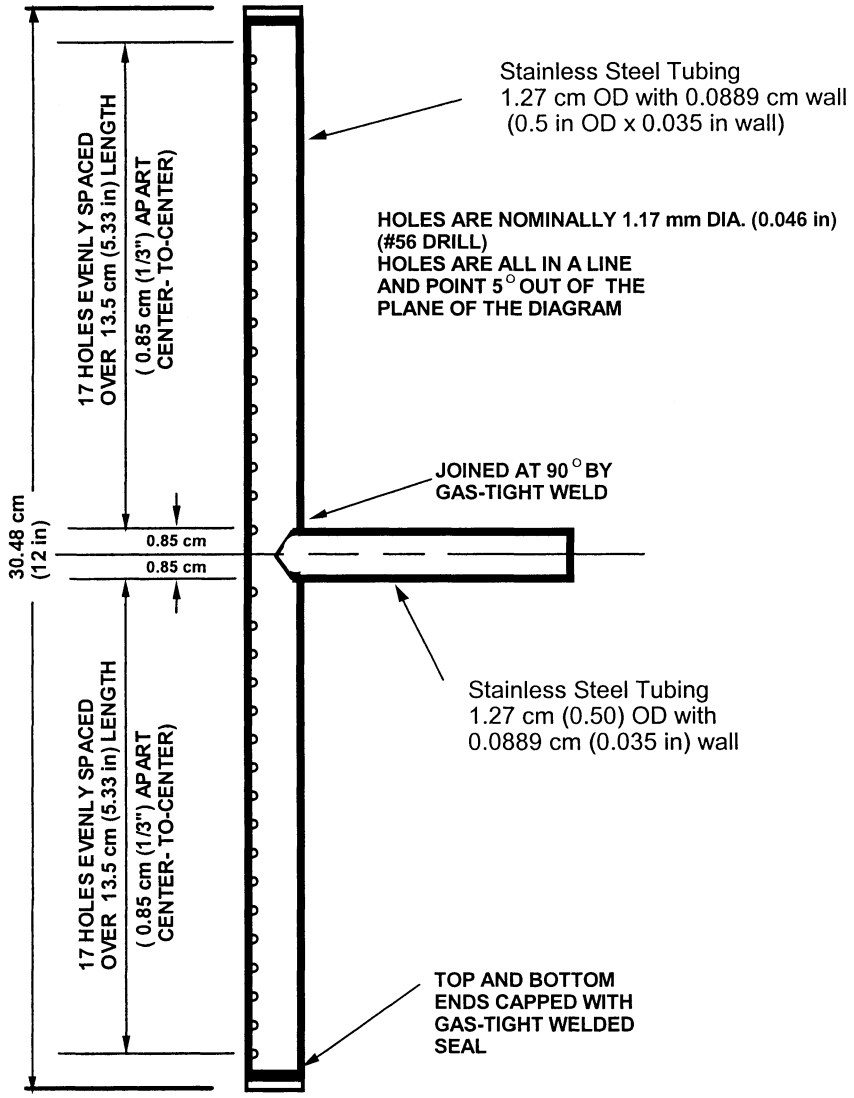

FIGURE 3. DETAILS OF HORIZONTAL BURNER HEAD.

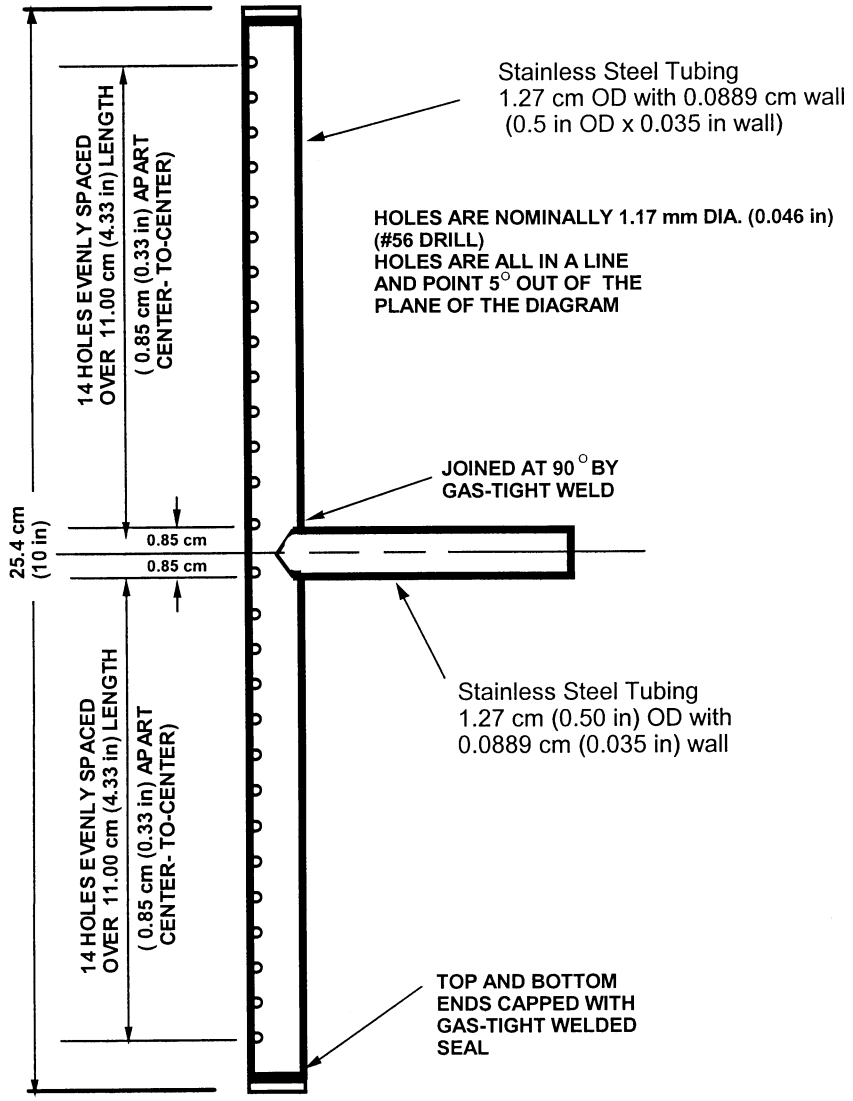

FIGURE 4. DETAILS OF VERTICAL BURNER HEAD.

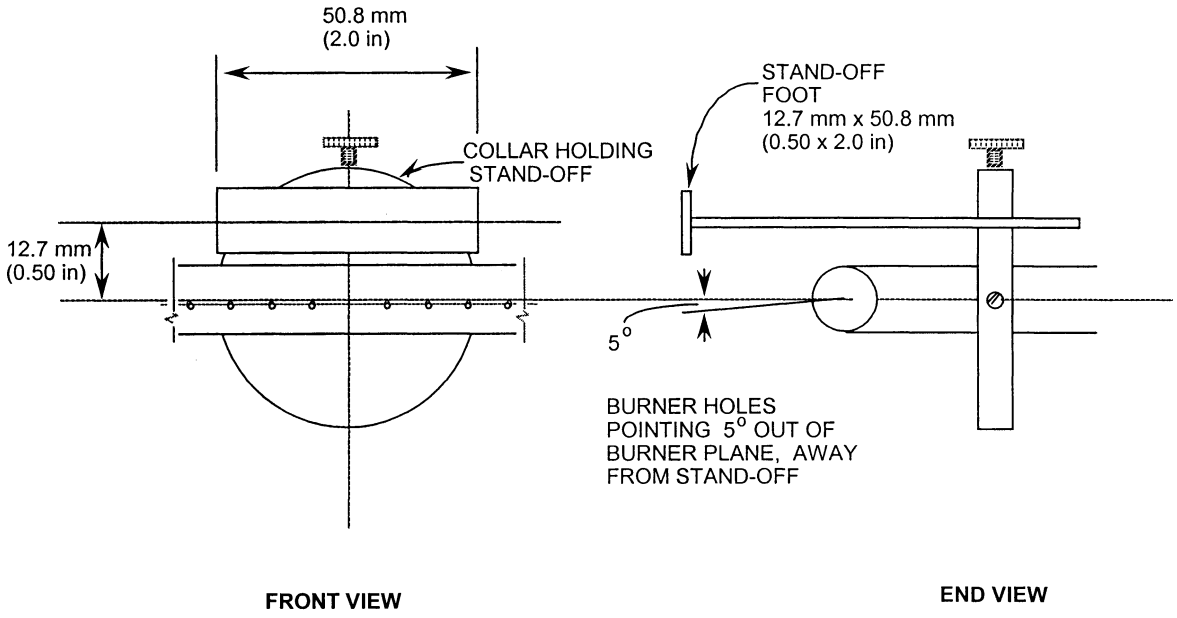

FIGURE 5. DETAILS OF BURNER STAND-OFF.

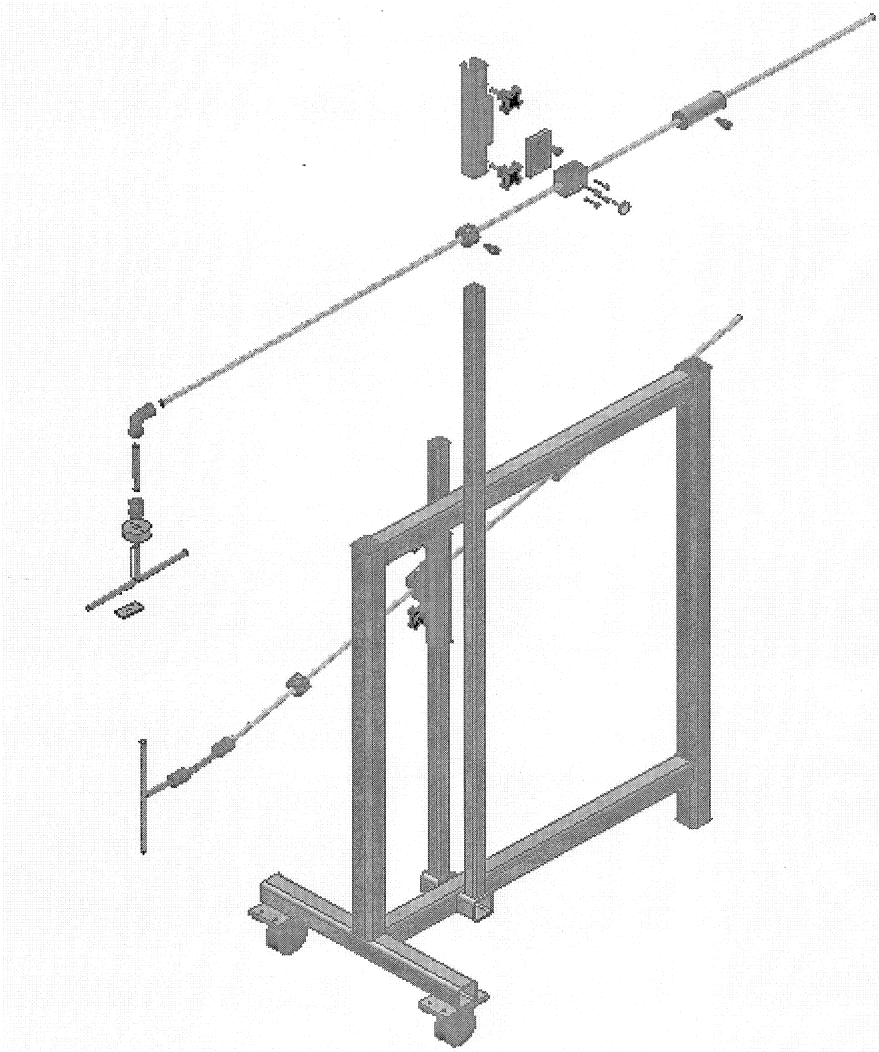

FIGURE 6. BURNER ASSEMBLY* SHOWING ARMS AND PIVOTS (Shoulder Screws), IN RELATION TO, PORTABLE FRAME ALLOWING BURNER HEIGHT ADJUSTMENT.

*Note that the feed tube for the side burner will be horizontal when the side burner pivot is locked in place, as is usual during a test exposure.

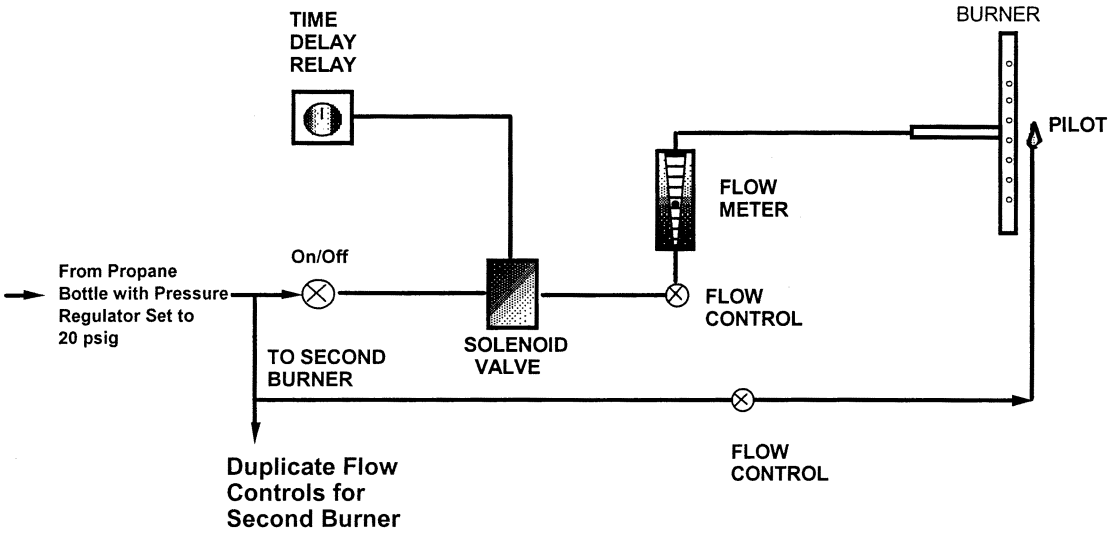

FIGURE 7. ELEMENTS OF PROPANE FLOW CONTROL FOR EACH BURNER

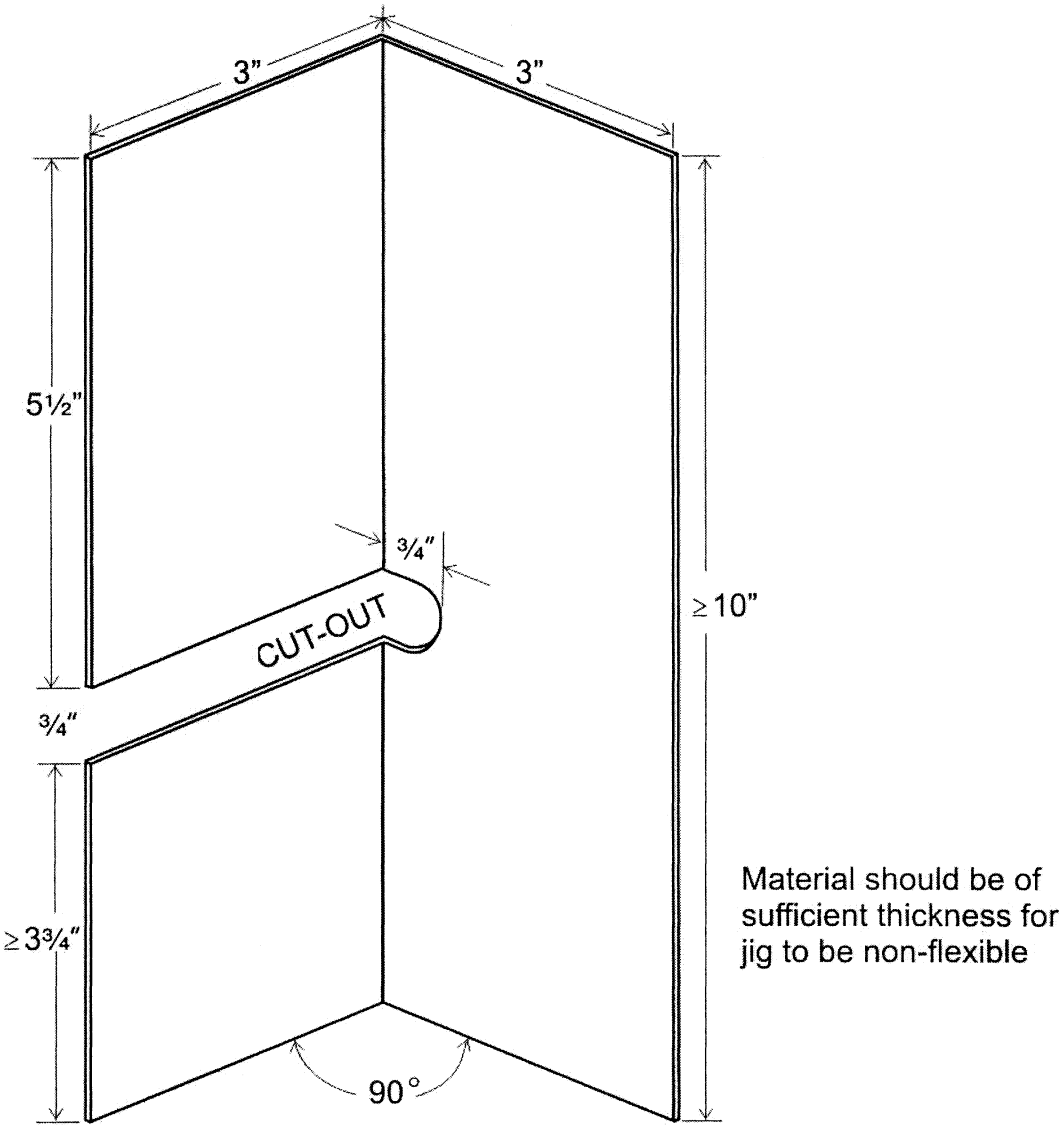

FIGURE 8 JIG FOR SETTING MATTRESS AND FOUNDATION SIDES IN SAME PLANE

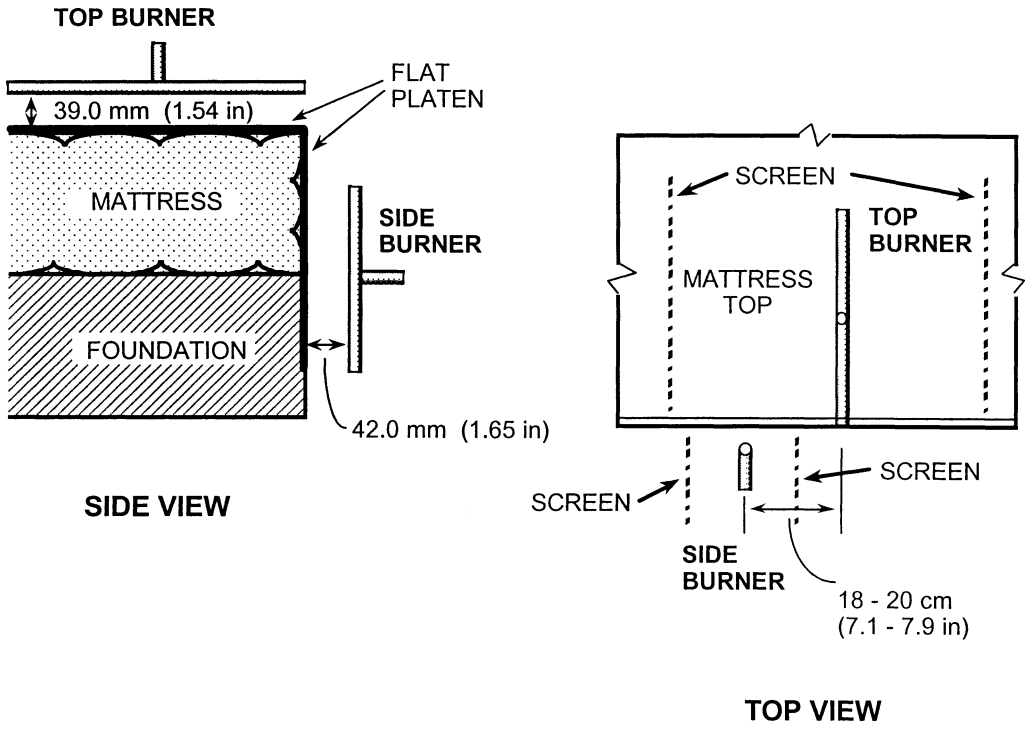

FIGURE 9. BURNER PLACEMENTS ON MATTRESS / FOUNDATION

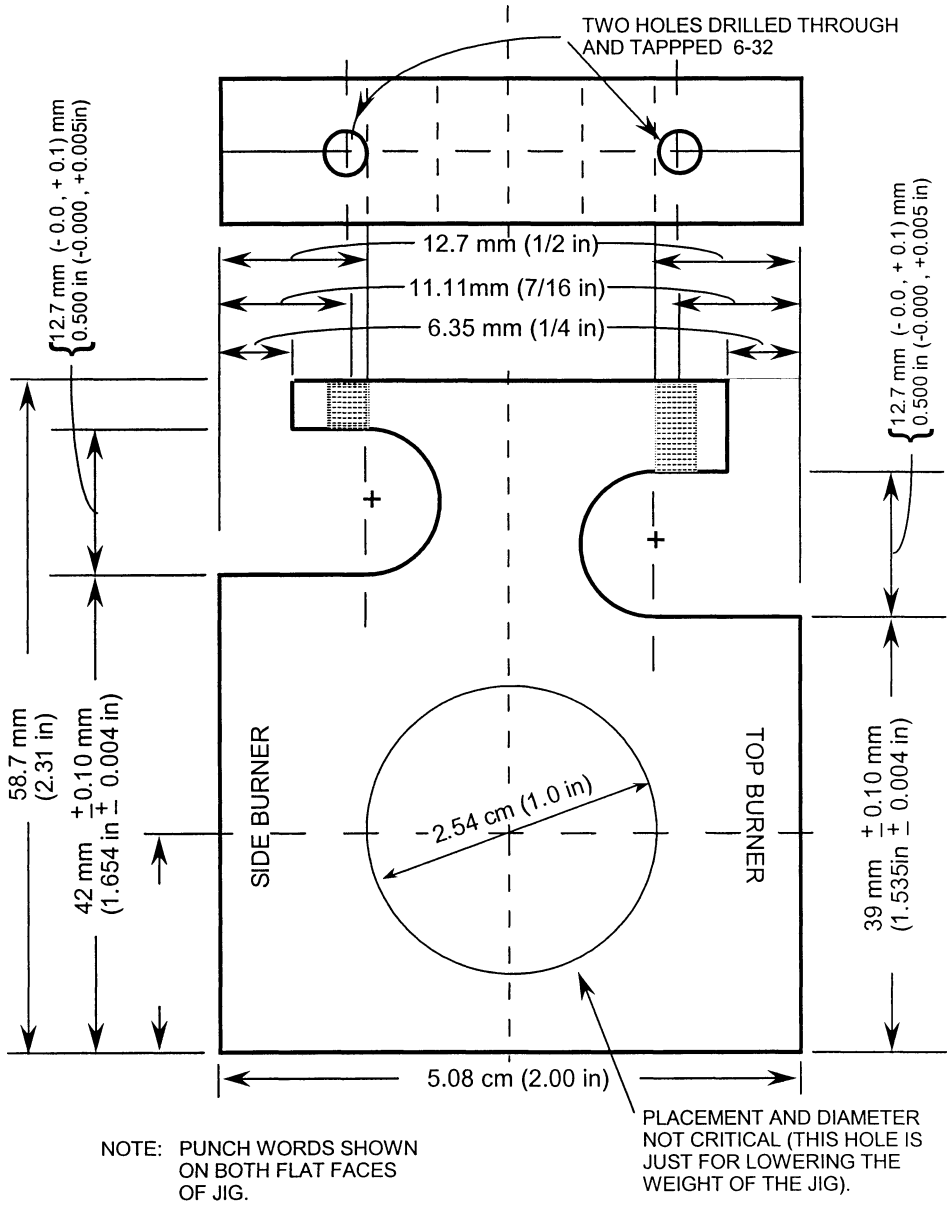

FIGURE 10. JIG FOR SETTING BURNERS AT PROPER DISTANCES FROM MATTRESS / FOUNDATION

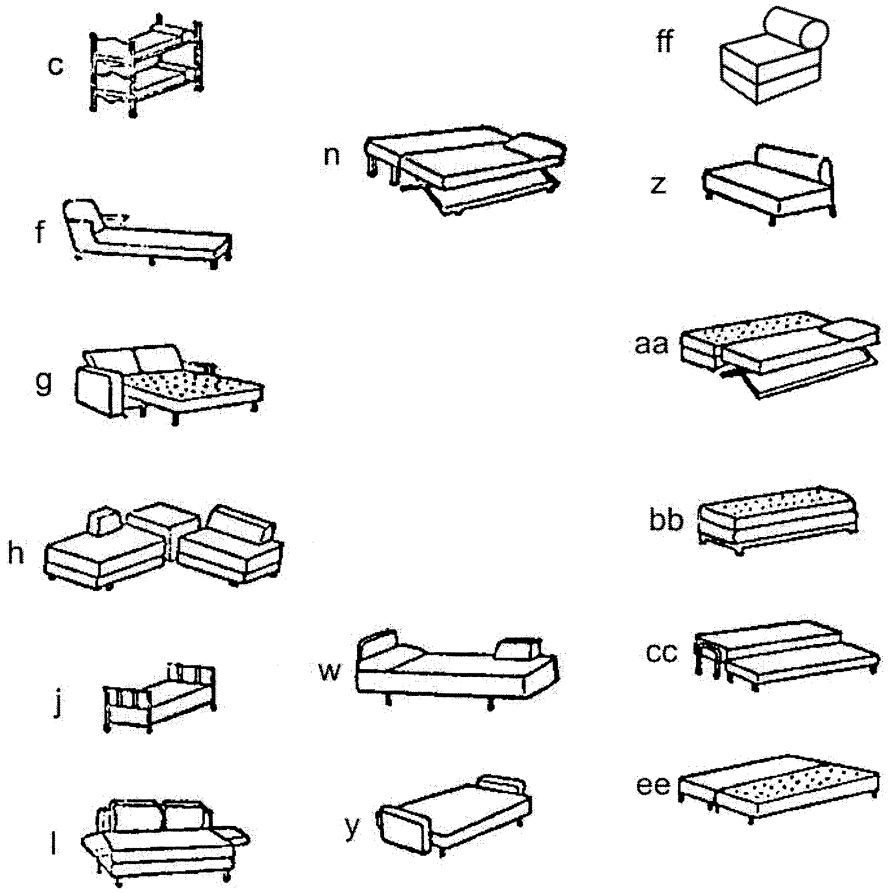

FIGURE 11. DIAGRAMS FOR GLOSSARY OF TERMS

BILLING CODE 6355–01–C

Appendix A: Calibration of Propane Flowmeters

1. Once the assembly of the burner is completed and all the connecting points are checked for gas leakage, the most critical task is ensuring the exact flow rates of propane into the top and side burners, as described in the test protocol. The gas flow rates are specified at 12.9 Liters per minute (LPM) ± 0.1 LPM and 6.6 LPM ± 0.05 LPM for the top and side burners (Burners 1 and 2), respectively, at a pressure of 101 ± 5 kiloPascal (kPa) (standard atmospheric pressure) and a temperature of 22 ± 3° Centigrade (C). The rotameters that are installed in the control box of the burner assembly need to be calibrated for accurate measurement of these flow rates.

2. The most practical and accurate method of measuring and calibrating the flow rate of gases (including propane) is use of a diaphragm test meter (also called a dry test meter). A diaphragm test meter functions based on positive displacement of a fixed volume of gas per rotation and its reading is therefore independent of the type of the gas being used. The gas pressure and temperature, however, can have significant impact on the measurement of flow rate.

3. The gas pressure downstream of the rotameters that are installed in the control box of the burner assembly is maintained near atmospheric pressure (only a few millimeters of water above atmosphere). Therefore, the best location to place the diaphragm test meter for gas flow calibration is right downstream of the control box. The pressure at the propane tank must be set at 20 ± 0.5 pounds per square inch gage (psig).

Calibration Procedure:

Install the diaphragm test meter (DTM) downstream of the control box in the line for the top burner. Check all connecting points for gas leakage. Open the main valve on the propane tank and set a pressure of 20 ± 0.5 psig. Set the timers in the control box for 999 seconds (or the maximum range possible). Record the barometric pressure. Turn the ''Burner 1'' switch to ON and ignite the top burner. Allow the gas to flow for 2–3 minutes until the DTM is stabilized. Record the pressure and temperature in the DTM. Use a stopwatch to record at least one minute worth of complete rotations while counting the number of rotations.[1] Calculate the propane gas flow rate using the recorded time and number of rotations (total flow in that time). Use the pressure and temperature readings to convert to standard conditions. Repeat this measurement for two additional meter setting to allow for calibrating the flowmeter throughout the range of interest. Plot the flow versus meter reading, fit a best line (possibly quadratic) through these points to find the meter setting for a flow of 12.9 LPM at the above ''standard'' conditions. Repeat this procedure for ''Burner 2'' using three meter readings to find the setting that gives a flow rate of 6.6 LPM at the standard conditions. After completion of the calibration, re-set the timers to 70 and 50 seconds.

Appendix B: Burner Operation Sequence

1. Starting point: AC power on (red knob out); propane pressure set to 20 psig at bottle; timers set to 70 s (top burner) and 50 s (side burner); flowmeters pre-set to values that give the requisite propane gas flow rates to each burner. Pilot tubes set just behind front surface of burners; pilot flow valves set for ca. 2 cm flames.

2. Position burner on test specimen and remove sheet metal platen.

[1] With a diaphragm test meter well-sized to this application, this should be more than five rotations. A one liter per rotation meter will require 10 to 15 rotations for the flow measurements and greater than the minimum of one minute recording time specified here.

3. Place screens around both burners.

4. Open pilot ball valves one at a time and ignite pilots with hand-held flame; adjust flame size if necessary being very careful to avoid a jet flame that could prematurely ignite the test specimen (Beware: after a long interval between tests the low pilot flow rate will require a long time to displace air in the line and achieve the steady-state flame size.)

5. Open both burner ball valves.

6. *Start test exposure* by simultaneously turning on power to both timers (timers will turn off burners at appropriate times).

7. Check/adjust propane flow rates (DO THIS ESSENTIAL TASK IMMEDIATELY. Experience shows the flow will not remain the same from test-to-test in spite of fixed valve positions so adjustment is essential.)

8. *After burners are out:*

a. Lift top burner and back assembly away from specimen.

b. Turn off power to both timers.

c. Remove screens.

d. Turn off pilots at their ball valves.

Dated: December 22, 2004.

Todd Stevenson,

Secretary, Consumer Product Safety Commission.

List of Relevant Documents

1. Briefing memorandum from Margaret Neily, Project Manager, Directorate for Engineering Sciences, to the Commission, ''Notice of Proposed Rulemaking for Mattress Flammability (Open Flame) and Options for Addressing Bedclothes Involvement in Mattress/Bedding Fires,'' November 1, 2004.

2. Memorandum from Allyson Tenney, ES, to Margaret Neily, Engineering Sciences, ''Background and Technical Rationale for Draft Proposed Standard for Open Flame Mattress Flammability,'' October 29, 2004.

3. Memorandum from Linda Smith and David Miller, EPI, ''Residential Fires Involving Mattresses and Bedding,'' October 2004.

4. Memorandum from Carolyn Meiers, ESHF, to Margaret Neily, Project Manager, ''Criteria for Judging Effectiveness of Proposed Mattress Standard,'' October 14, 2004.

5. Memorandum from Carolyn Meiers, ESHF, to Margaret Neily, Project Manager, ''Human Behavior in Fire,'' October 7, 2004.

6. Memorandum from Treye Thomas and Patricia Brundage, HS, ''Qualitative Assessment of Potential Risk from the Use of Flame Retardant Chemicals in Mattresses,'' October 25, 2004.

7. Memorandum from Robert Franklin, EC, to Margaret L. Neily, ES, ''Preliminary Environmental Assessment of a Draft Proposed Open-Flame Ignition Resistance Standard for Mattresses,'' October 21, 2004.

8. Memorandum from Soumaya Tohamy, EC, to Margaret Neily, Project Manager, ''Preliminary Regulatory Analysis of a Draft Proposed Standard to Address Open Flame Ignitions of Mattresses,'' October 27, 2004.

9. Memorandum from Soumaya Tohamy, EC, to Margaret Neily, Project Manager, ''Initial Regulatory Flexibility Analysis of a Draft Proposed Standard to Address Open Flame Ignitions of Mattresses,'' October 27, 2004.

10. Terrance R. Karels, EC, to Margaret L. Neily, ES, ''Updated Mattress Market Information,'' October 5, 2004.

11 Memorandum from Linda Smith EPI, ''Involvement of Bedclothes in Residential Mattress Fires,'' May 2004.

12. Terrance R. Karels, EC, to Margaret L. Neily, ES, ''Bedding Market Information,'' October 5, 2004.

13. Memorandum from Allyson Tenney, ES, to Margaret Neily, Engineering Sciences, ''Bedclothes Flammability,'' October 29, 2004.

14. Memorandum from Martha A. Kosh, OS, to ES, ''Standard to Address Open Flame Ignition of Mattresses/Bedding; ANPR,'' List of comments on CF 02–1, December 13, 2001.

15. Memorandum from Martha A. Kosh, OS, to ES, ''Standard to Address Open Flame Ignition of Mattresses/Bedding; ANPR (Revised),'' List of comments on CF 02–1, September 27, 2004.

16. National Research Council (2000). Toxicological Risks of Selected Flame-Retardant Chemicals (Washington, DC, National Academy Press).

[FR Doc. 05–416 Filed 1–12–05; 8:45 am]

BILLING CODE 6355–01–P

CONSUMER PRODUCT SAFETY COMMISSION

16 CFR Part 1634

Standard To Address Open Flame Ignition of Bedclothes; Advance Notice of Proposed Rulemaking

AGENCY: Consumer Product Safety Commission.

ACTION: Advance Notice of proposed rulemaking.

SUMMARY: The Commission is considering issuing a flammability standard that would address open flame ignition of bedclothes. (Commissioner Thomas H. Moore issued a statement, a copy of which is available from the Commission's Office of the Secretary or from the Commission's Web site, *http://www.cpsc.gov.*) Elsewhere in today's **Federal Register**, the Commission is proposing a flammability standard that addresses open flame ignition of mattresses/foundations. Research indicates that in mattress fires the mattress and bedclothes operate together as a system. Thus, the Commission believes that a flammability standard for bedclothes in addition to one for mattresses may be appropriate. The Commission invites comments concerning the risk of injury identified in this notice, the regulatory alternatives being considered, and other possible alternatives. The Commission also invites submission of any existing standard or statement of intention to modify or develop a voluntary standard to address small open flame ignition of bedclothes.

DATES: Comments and submissions must be received by March 14, 2005.

ADDRESSES: Comments should be mailed, preferably in five copies, to the Office of the Secretary, Consumer Product Safety Commission, Washington, DC 20207–0001, or delivered to the Office of the Secretary, Consumer Product Safety Commission, Room 502, 4330 East-West Highway, Bethesda, Maryland; telephone (301) 504–0800. Comments also may be filed by telefacsimile to (301) 504–0127 or by email to *cpsc-os@cpsc.gov*. Comments should be captioned ''Bedclothes ANPR.''

FOR FURTHER INFORMATION CONTACT: Margaret Neily, Directorate for Engineering Sciences, Consumer Product Safety Commission, Washington, DC 20207; telephone (301) 504–0508, extension 1293.

SUPPLEMENTARY INFORMATION:

A. Background

An existing flammability standard for mattresses addresses ignition of mattresses and mattress pads by cigarettes. 16 CFR Part 1632. On October 11, 2001, the Commission published an advance notice of proposed rulemaking (''ANPR'') addressing open flame ignition of mattresses. 66 FR 51886. That ANPR was the result of several years of evaluation by Commission staff and petitions on mattress flammability submitted by Whitney Davis, Director of the Children's Coalition for Fire-safe Mattresses. As explained in the ANPR, the Sleep Products Safety Council (''SPSC''), an affiliate of the International Sleep Products Association (''ISPA''), sponsored a research program at the National Institute of Standards and Technology (''NIST''). The NIST research program has provided a great deal of technical information about mattress fires, including the role of bedclothes in such fires.

As noted in the mattress ANPR, mattresses generally are not used alone, but are covered by bedding or bedclothes, whose presence significantly affects the character of the fire. In most incidents a small open flame initially ignites the bedding, and these materials serve as a larger ignition source for the mattress. Because few materials can resist such a large ignition source, the typical approach of preventing ignition of a mattress through a product performance standard may not be fully adequate for an open flame mattress standard. Therefore, the Commission has taken the approach in