Accessibility and Lead

Per CPSIA § 101 (b)(2)(A)(a): *The limits established...shall not apply to any component part of a children's product that is not accessible to a child through normal and reasonably foreseeable use and abuse of such product, as determined by the Commission. A component part is not accessible under this subparagraph if such component part is not* physically exposed *by reason of a sealed covering or casing and does not become* physically exposed *through reasonably forseeable use and abuse of the product.*

- "Physically exposed" needs to be further defined for clarity.
- Being "physically exposed" could be interpreted to include parts of products that pose no potential hazard.
- For example, a component can be "physically exposed" by being visible.
- Or a component can be "physically exposed" by touch although concealed within a flexible or sewn shell.

Accessibility and Lead

- Accessibility Probes from:16 CFR1500.48 and 16 CFR 1500.49
- Referred to in ASTM F963-07
- For use as received and after abuse testing for up to 8 years of age
- This toy safety standard is for children up to 14 years of age
- Probe A (Children Ages 0 through 36 months)
- Probe B (Children Ages 3 months through 96 months)

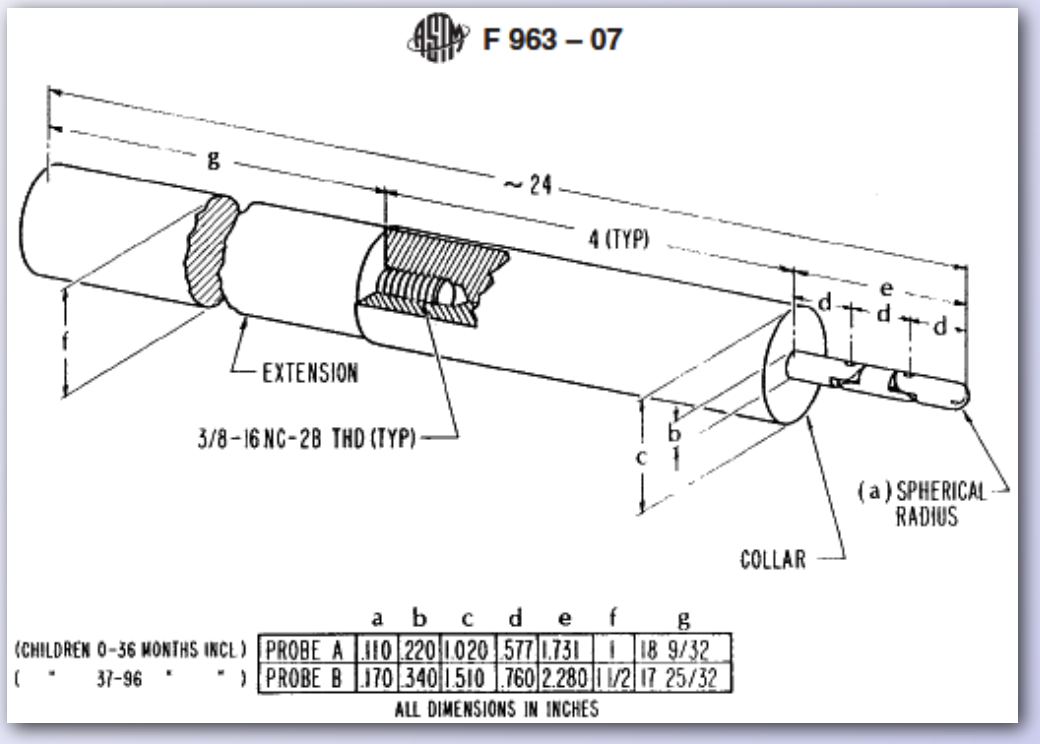

		a	b	c	d	e	f	g
(CHILDREN 0-36 MONTHS INCL.)	PROBE A	.110	.220	1.020	.577	1.731	1	18 9/32
(" 37-96 " ")	PROBE B	.170	.340	1.510	.760	2.280	1 1/2	17 25/32

Accessibility and Lead

- Accessibility probes help to screen components to see if they can be touched/contacted.
- Accessible parts could be further evaluated to see if they are components that are capable of being chewed, sucked or swallowed.
- Consider if specific dimensions that determine if the component is mouthable should be used.
- The small parts gage should be used to define if a part could be ingested.
- Solubility helps to determine if lead levels pose a risk of lead poisoning.
- It is recommended to have studies that can correlate total lead scenarios in toy components, especially electronic components, with soluble lead.

Efficient Testing

Testing protocols and methodologies that are efficient allow for effective use of resources to verify compliance and detect nonconforming product.

Some approaches to Efficient Testing:

- Testing relevant components- i.e. testing for lead in accessible components, testing in areas with possibility of failure
- Combining or Composite testing- testing a painted doll eye that has three layers of overlapping or distinct colors
- Composite testing by combining materials- testing the doll torso and arms
- Use only paint available from a single toy, as is done in EN 71 part 3
- If less than 10 mg of paint sample do not test (ASTM F963 and EN 71 part 3)
- Certification programs
- View Testing Protocols as verification to certify compliance
- Take into consideration economies of scale that come with having international test methods and methodologies wholly or partly harmonized.

Efficient Testing

Combining or Composite testing

e.g. testing a painted doll eye that has three layers of overlapping or distinct colors

1. For example when the regulation limit is 90 ppm for total lead in paint:
   If *equal parts* of three different colors were tested, and the total lead in the combined sample is found to be less than 30 ppm, then this would verify that no one color exceeds 90ppm, and additional testing would not be needed.
2. Consider that the overall intent of the new regulations is to prevent the hazard of lead exposure and lead poisoning and that testing is used to provide verification.
3. If there is a failure at the composite test stage, then the product fails the requirement and the test.
4. A failure analysis could be done by then retesting individual colors to determine which specific color exceeded the limit.
5. Labs accredited to IEC 17025 can perform this responsibly and correctly and protocols can be developed to standardize the practice.

Efficient Testing

The benefits of efficient testing are extensive and widespread

1. Conserves resources of time, labor, transportation and testing charges
2. Less cost throughout the production cycle
3. Less cost in the supply chain
4. Less cost to consumers
5. Shortens the test turnaround time - allows for quicker response times by manufacturers
6. Shorten warehousing time
7. Reduce the wasteful destruction of product during testing
8. Reduces environmental impact with the reduction in chemical use during testing
9. Cost savings can be put into testing programs with more impact
10. Cost savings can be put toward product specific features
11. Less environmental impact
12. Put more focus on prevention and up stream controls

Thank You.

Rachel Murray Meyer
Toy Safety and Quality, Inc.
CMA Testing and Certification Laboratories
3701 Sacramento Street #446
San Francisco, CA 94118
RachelMurrayMeyer@sbcglobal.net