⚠WARNING

STRANGULATION HAZARD

NEVER place bed near windows where cords from blinds or drapes may strangle a child.
NEVER suspend strings over bed.
NEVER place items with a string, cord, or ribbon, such as hood strings or pacifier cords, around a child's neck. These items may catch on bed parts.

Dated: March 24, 2010

Todd Stevenson,

Secretary, U.S. Consumer Product Safety Commission.

[FR Doc. 2010–6947 Filed 4–27–10; 8:45 am]

BILLING CODE 6355–01–P

CONSUMER PRODUCT SAFETY COMMISSION

16 CFR Part 1218

[CPSC Docket No. CPSC–2010–0028]

Safety Standard for Bassinets and Cradles: Notice of Proposed Rulemaking

AGENCY: Consumer Product Safety Commission.

ACTION: Notice of proposed rulemaking.

SUMMARY: Section 104(b) of the Consumer Product Safety Improvement Act of 2008 ("CPSIA") requires the United States Consumer Product Safety Commission ("CPSC" or "Commission") to promulgate consumer product safety standards for durable infant or toddler products. These standards are to be "substantially the same as" applicable voluntary standards or more stringent than the voluntary standard if the Commission concludes that more stringent requirements would further reduce the risk of injury associated with the product. The Commission is proposing a more stringent safety standard for bassinets and cradles that will further reduce the risk of injury associated with these products.

DATES: Written comments must be received by July 12, 2010.

ADDRESSES: Comments relating to the instructional literature and marking required by the proposed rule relating to the Paperwork Reduction Act should be directed to the Office of Information and Regulatory Affairs, OMB, Attn: CPSC Desk Officer, FAX: 202–395–6974, or e-mailed to *oira_submission@omb.eop.gov.*

Other comments, identified by Docket No. CPSC–2010–_____, may be submitted by any of the following methods:

Electronic Submissions

Submit electronic comments in the following way:

Federal eRulemaking Portal: http://www.regulations.gov. Follow the instructions for submitting comments. To ensure timely processing of comments, the Commission is no longer accepting comments submitted by electronic mail (e-mail) except through *http://www.regulations.gov.*

Written Submissions

Submit written submissions in the following way:

Mail/Hand delivery/Courier (for paper, disk, or CD–ROM submissions), preferably in five copies, to: Office of the Secretary, Consumer Product Safety Commission, Room 502, 4330 East-West Highway, Bethesda, MD 20814; telephone (301) 504–7923.

Instructions: All submissions received must include the agency name and docket number for this rulemaking. All comments received may be posted without change, including any personal identifiers, contact information, or other personal information provided, to *http://www.regulations.gov.* Do not submit confidential business information, trade secret information, or other sensitive or protected information electronically. Such information should be submitted in writing.

Docket: For access to the docket to read background documents or comments received, go to *http://www.regulations.gov.*

FOR FURTHER INFORMATION CONTACT: Han Lim, Project Manager, Directorate for Engineering Sciences, Consumer Product Safety Commission, 4330 East-West Highway, Bethesda, MD 20814; telephone (301) 504–7538; *hlim@cpsc.gov.*

SUPPLEMENTARY INFORMATION:

A. Background and Statutory Authority

The Consumer Product Safety Improvement Act of 2008, Public Law 110–314 ("CPSIA") was enacted on August 14, 2008. Section 104(b) of the CPSIA requires the Commission to promulgate consumer product safety standards for durable infant or toddler products. These standards are to be "substantially the same as" applicable voluntary standards or more stringent than the voluntary standard if the Commission concludes that more stringent requirements would further reduce the risk of injury associated with the product. In this document the Commission proposes a safety standard for bassinets and cradles. The proposed standard is more stringent in some respects than the voluntary standard developed by ASTM International (formerly the American Society for Testing and Materials), ASTM F 2194–07a$^{\varepsilon 1}$, "Standard Consumer Safety Specification for Bassinets and Cradles." The proposed modifications, if finalized, will further reduce the risk of injury associated with bassinets and cradles.

B. The Product

A bassinet or cradle is a small bed for infants supported by free-standing legs, a wheeled base, a rocking base, or that can swing relative to a stationary base. A bassinet or cradle is not intended to be used with children who are beyond the age of approximately 5 months. Bassinet and cradle attachments for non-full-size cribs or play yards are considered a part of this product category, as are bedside sleeper bassinets that can be converted to a four-sided bassinet not attached to a bed.

Full-size cribs and infant swings are not included under the definition of bassinet or cradle. Products used in conjunction with infant swings or strollers or Moses baskets (hand-carrying baskets) are not included under the definition of bassinet or cradle. However, a Moses basket or a similar product used with infant swings or strollers that can attach to a separate base which can convert it to a bassinet

or cradle is considered a bassinet or cradle.

While the current ASTM F 2194–07a $^{\varepsilon 1}$ standard does not explicitly state that infant hammocks are within the scope of the standard, the Juvenile Products Manufacturers Association, (JPMA), historically has certified infant hammocks under the bassinet/cradle standard. Two firms have hammocks certified by JPMA to the ASTM F 2194—07a $^{\varepsilon 1}$ standard.

By nature of their design, most hammocks do not have a rigid sleep surface. The Commission believes that many of the current designs it has been studying result in uneven suspension of the product, which can cause the hammock to tip to one side, trapping the baby in a face down position and increasing the risk of positional asphyxia or suffocation. Because of this hazard pattern, CPSC recently recalled an infant hammock. Since the sleeping environment of most hammocks differs from that of bassinets and cradles, the Commission believes a separate standard for hammocks may be necessary. Most hammocks have mattresses that are flexible and conform to the body contours of the infant, whereas bassinets and cradles have flat mattresses with solid or fabric sides. In a November 17, 2009 CPSC/ASTM teleconference, ASTM agreed to form a subcommittee to develop requirements for a new hammock standard. Until a separate standard for hammocks is developed, the Commission believes it is prudent to include hammocks under the proposed rule for bassinets and cradles as an interim measure because the proposed rule addresses the hazard pattern which causes the infant to roll/press up against the side or corner of the product, posing a risk of positional asphyxia or suffocation. The Commission is aware that, by their nature, most infant hammocks will likely be unable to meet the proposed performance criteria of a 5° rest angle, 5° flatness angle, and a 20° maximum rock/swing angle in this proposed standard, and will thus be effectively banned. The Commission seeks comment on whether such action is necessary given the risk of positional asphyxia the rule attempts to address. The Commission may remove hammocks from the scope of a bassinets/cradles standard in the future, should ASTM develop an effective voluntary standard for hammocks. The Commission seeks information regarding proposals for an infant hammock standard.

Applying American Baby Group survey data from 2005 to the most recent U.S. birth data from the Centers for Disease Control and Prevention (CDC) yields annual estimates of about 1.4 million bassinets, 333,000 cradles, 596,000 portable play yards with bassinet attachments, and 749,000 full-size play yards with bassinet attachments. (The data collected for the *Baby Products Tracking Study* does not represent an unbiased statistical sample.) This yields a total of approximately 3.1 million units sold per year.

C. ASTM Voluntary Standard

ASTM first approved and published the voluntary standard for bassinets and cradles in 2002 as ASTM F 2194, *Standard Consumer Safety Specification for Bassinets and Cradles.* ASTM has revised the standard a number of times since 2002, with the current version, ASTM F 2194–07a $^{\varepsilon 1}$, published in November 2007. ASTM F 2194–07 $^{\varepsilon 1}$ contains requirements to address the following:

- Lead in paint;
- Hazardous sharp edges or points;
- Small parts;
- Wood parts;
- Scissoring, shearing, pinching;
- Unintentional folding;
- Openings;
- Labeling;
- Fasteners;
- Corner posts;
- Toy accessories;
- Bassinet/cradle attachments to play yards/non-full sized cribs;
- Spacing of rigid sided bassinet/cradle components;
- Openings for mesh/fabric-sided bassinet/cradle;
- Static load;
- Stability;
- Sleeping pad properties; and
- Protective components.

JPMA operates a certification program to certify bassinets and cradles to the voluntary standard. To obtain JPMA certification, manufacturers submit their products to an independent test laboratory for conformance testing to the most current voluntary standard. Currently, bassinets or cradles supplied by eight small manufacturers and four small importers are JPMA certified to ASTM F 2194–07a $^{\varepsilon 1}$.

D. Incident Data

1. Categories of Incidents

The CPSC Directorate for Epidemiology reports that there have been 209 incidents related to bassinets and cradles since 2006, of which there were 61 fatalities, 38 non-fatal injuries, and 110 non-injury incidents. The incidents were grouped into five categories: (a) Product-related issues, in which sufficient information was available to describe the product failure modes or defects; (b) non-product-related issues; (c) unknown issues (incidents that lacked specificity), (d) recalled product-related issues; and (e) miscellaneous other issues.

a. *Product-Related Issues.* Eighty-seven of the 209 incidents, or approximately 42%, involved hardware failures or design issues related to the product. The reported problems are listed below, beginning with the most frequently reported problems:

- Inadequate structural integrity, which included unstable bassinets or cradles, loose hardware, collapse of the product, loose wheels, *etc.;*
- Locking or tilting issues with the bassinets or cradles, which cause the infant to roll or press up against the side or corner of the product, posing a suffocation hazard;
- Problems with mattress flatness, such as mattresses that would not remain horizontal because of metal rods or other structures designed to be positioned underneath the mattress, lack of rigid mattress support, and failure of straps or hooks designed to hold bassinets inside play yards. One death was associated with a mattress flatness issue; and
- Problems with battery-powered bassinet mobiles which had components that overheated, smoked, or sparked.

b. *Non-Product-Related Issues.* Sixty of the 209 incident reports, or 29%, were of deaths or injuries that could not be attributed to a product defect or failure. Fifty-seven of the 60 incidents were deaths where a determination of causation or association was complicated by the inappropriate use of pillows, blankets, or mattresses.

c. *Unknown Issues.* Twenty-six of the incidents, or 12%, had little or no information. Twenty-five of these reported a fall of the infant out of the bassinet or cradle.

d. *Recalled Product-Related Issues.* There were 19 reports (9%) that involved recalled products. Among them were seven entrapments (three deaths, two non-fatal injuries, and two non-injury incidents) between the metal rods of the bassinet. The remaining 12 reports were complaints or inquiries from consumers regarding a recalled product.

e. *Miscellaneous Other Issues.* The remaining 17 incident reports involved a host of miscellaneous problems, including a tear in the bassinet fabric, odors, and product assembly or quality issues.

2. Deaths and Injuries

All 61 fatalities reported to CPSC staff were asphyxiation deaths. The majority of deaths (57 out of 61) were asphyxiations where the incident report noted the presence of soft or extra bedding in the bassinet, prone placement of the infant, or the infant getting wedged between the side of the bassinet and mattress or bedding. Soft or extra bedding and the prone placement of an infant are associated with infant mortality from asphyxiation, independent of any design hazard. A few were reported as asphyxiation deaths, with no further information available. Only four of these deaths were determined to have resulted from design flaws of the product. Three of the four deaths were due to entrapment of the infant between the metal bars of a particular brand of bassinet. Of those three deaths, two of the three infants were six months old and should not have been using the bassinet or cradle because by definition they are only for use up to five months. The fourth death resulted from an infant suffocating in the corner of the bassinet when he rolled into that position due to the unlevel mattress pad.

Thirty-eight incidents reported an injury to an infant. Twenty-three out of the 38 incidents, or 61%, were identified as falls out of the bassinets. Serious injuries included a skull fracture resulting from an infant falling out of the bassinet due to non-level mattress issues, an arm fracture resulting from a fall due to problems with a bassinet's rocking feature, and a second-degree burn resulting from the bassinet's overheated mobile. The remaining injuries were mostly limited to contusions and abrasions.

3. Hammock Incidents

The Commission is aware of three fatalities, six non-fatal injuries, and five non-injury incidents related to infant hammocks that were reported to have occurred since 2006. All three fatalities reported to CPSC were asphyxiation deaths. One five-month old infant was found rolled into a corner in a prone position with the bed in an inclined position. A four-month old infant was found with her face flat against the foam mattress. In the third case, the medical examiner reporting the fatality expressed concern about the safety of the hammock as a sleeping environment. However, the death of the six-month old infant, who was found in a prone position, was officially ruled to be asphyxiation due to respiratory infection.

All six non-fatal injuries were reported through the National Electronic Injury Surveillance System ("NEISS"). Five of the injuries were reported to have been falls out of hammocks, while the sixth injury was sustained when a broken component of the hammock struck the infant. Little or no circumstantial information is available on how the falls occurred, except that three of the six infants were eight months or older.

Two of the five non-injury reports involved infants (a seven-month old and a 12-month old) in near-strangulation incidents where the hammock flipped over with the infants dangling from restraints. The remaining three reports involved near-suffocation incidents where the infant rolled into a position from which it was unable to move or free itself. All three infants were under five months of age.

E. Assessment of Voluntary Standard ASTM F 2194–07a$^{\varepsilon 1}$ and Description of Proposed Changes and the Proposed Rule

1. Assessment of Voluntary Standard ASTM F 2194–07a$^{\varepsilon 1}$

Section 104(b) of the CPSIA requires the Commission to assess the effectiveness of the voluntary standard in consultation with representatives of consumer groups, juvenile product manufacturers, and other experts. This consultation process began in October 2009 during the ASTM International subcommittee meeting regarding the ASTM bassinet and cradle voluntary standard. Consultations with members of this subcommittee are still ongoing.

ASTM F 2194–07a$^{\varepsilon 1}$ contains several labeling and performance criteria. The standard addresses many of the same hazards associated with other durable nursery products and includes requirements for tip stability, unintentional folding of the product, lead in paints, sharp edges/sharp points, small parts, wood part splinters, scissoring/shearing/pinching, openings/entrapments, warning labels, and toys (which includes battery-powered mobiles). The Commission believes that updates and modifications in certain areas also may address the hazards described in the incident data, such as suffocation due to mattress tilting, placing of inappropriate bedding materials (*e.g.,* pillows, additional blankets, *etc.*), and entrapment in the frame structure. While overheating of battery-powered mobiles was identified in the incidents, those incidents were isolated to one company.

2. Proposed Changes to the ASTM Standard's Requirements

Consistent with section 104(b) of the CPSIA, the Commission, through this proposed rule, would establish a new 16 CFR part 1218, "Safety Standard for Bassinets and Cradles." The new part would incorporate by reference the requirements for bassinets and cradles in ASTM F 2194–07a$^{\varepsilon 1}$ with certain changes to specific provisions and additions to the standard, as discussed below. The proposed modifications and additions to the standard will further reduce the risk of injury associated with bassinets and cradles. Therefore, the proposed rule would adopt ASTM F 2194–07a$^{\varepsilon 1}$ as the mandatory safety standard for bassinets and cradles with the following additions and modifications:

- Specify in the scope that the standard is a performance specification for bassinets and cradles and that the intended use is for infants who are not able to push up on their hands and knees;
- Add terminology that defines what constitutes a bassinet or cradle;
- Add a performance requirement and test procedure for maximum allowable rocking angle, maximum allowable rest angle of the sleep surface, and maximum allowable flatness angle;
- Add a performance requirement and test procedure for fabric-sided bassinets and cradles;
- Add a performance requirement and test procedure for locking mechanisms intended to prevent rocking or swinging cradles from rocking or swinging the mattress bed;
- Add updated warnings to address proper use of bedding materials by providing more emphasis and prominence to the warnings; and
- Exclude strap restraints in bassinets and cradles.

Following is a more detailed discussion of these additions and modifications. To best understand the proposed standard, it is helpful to view the current ASTM F 2194–07a$^{\varepsilon 1}$ standard for bassinets and cradles and the Commission's proposed modifications along with the explanations provided in section E.2 of the preamble. The ASTM standard is available for viewing for this purpose during the comment period through this link: *http://www.astm.org/cpsc.htm.*

a. Scope (Proposed § 1218.2(b)(1)(i))

Bassinets and cradles should only be used in the early stages of an infant's development. Once an infant can push up by him/herself, a number of hazards are created, most notably falling

hazards. Thus, the proposed rule would add objective criteria of an infant capable of pushing up on hands and knees to the scope of the standard to clarify which products would be considered bassinets or cradles. The proposed rule also would clarify that the bassinet or cradle should be used only for infants up to approximately five months of age.

b. Newborn Infant CAMI Dummy (Proposed § 1218.2(b)(2)(i))

Because the proposed standard would require testing with a 7 pound Newborn CAMI Dummy in the Rock/Swing Angle test and the Bassinet/Cradle Flatness Angle test, proposed § 1218.2(b)(2) would provide this reference and a photograph.

c. Definition of Bassinet/Cradle (Proposed § 1218.2(b)(3)(i))

Proposed § 1218.2(b)(3)(i) would improve the definition of bassinet/cradle by identifying the products that are excluded from the standard. The updated definition would clarify that full-size and non-full size cribs are not covered. Also, because a bassinet or cradle is defined as a product that must be supported by a base, hand-carrying baskets would not be covered.

d. Bassinet/Cradle Accessory (Proposed § 1218.2(b)(4)(i))

The proposal would update the definition of a bassinet/cradle accessory to avoid confusion with accessories that can attach to products that are not intended exclusively for sleep, such as strollers.

e. Double Action Release Mechanism (Proposed § 1218.2(b)(5)(i))

Section 5.6.3 of ASTM F 2194–07a–$^{\varepsilon}$1 requires that products with a "double action release mechanism" latching or locking device require two distinct and separate actions for release of the mechanism. The voluntary standard does not define "double action release mechanism." The Commission has observed various multi-use products that can convert from a rocking bassinet to a stationary one. During this conversion, there are dual-action locking mechanisms that require rotating pop-out casters and then engaging a "tab"-lock to prevent the casters from rolling. Despite appearances, such dual-action locking mechanisms are not double action release mechanisms. To avoid confusion in what constitutes a double action release mechanism and to ensure that the locking mechanism works as intended in resisting collapse and/or movement, the Commission is proposing to adopt the same definition as used in the voluntary ASTM high chair standard F 404–08. Specifically, the proposed rule would define a double action release mechanism as a "mechanism requiring either two consecutive actions, the first of which must be maintained while the second is carried out or two separate and independent single action locking mechanisms that must be activated simultaneously to fully release."

f. Removable Cover (Proposed § 1218.2(b)(5)(ii))

Because the term removable cover is referenced in the test procedure for evaluating possible scenarios of entrapment hazards from bounded areas of fabric and rigid sides of a bassinet or cradle in proposed § 1218.2(b)(11)(iii), the proposed rule would add a definition of "removable cover" to the standard.

g. Maximum Deflection Angle and Rest Angle (Proposed § 1218.2(b)(5)(iii), 1218.2(b)(5)(iv), 1218.2(b)(10), and 1218.2(b)(11))

When a bassinet or cradle is not in a swinging or rocking mode, it needs to be level to facilitate a safe sleeping environment for infants. There was one death and several close calls associated with non-level bassinets/cradles. According to an in-depth investigation (IDI) report, a two month old male died in a bassinet portion of a play yard. The infant rolled, causing his face to be placed in the corner of the bassinet. One side was approximately five inches higher than the other. The metal poles upon which the bassinet was seated were too short to keep the sleep surface level. In one non-fatal incident, a mother found her two-week old male infant with his face against the mattress, covering his nose and mouth after he had slid down the side of the mattress. The product involved was a play yard-swinging bassinet combination. The IDI report states that the locking mechanism to prevent the swinging motion disengaged when the mother placed her son in the product. The infant was not injured, and the mother returned the product to the store. In another non-fatal incident, a mother found her five-month-old daughter in a bassinet-play yard combination asleep up against the back side of the bassinet portion. The infant was not injured when the strap holding the bassinet insert to the side of her play yard ripped, causing the bassinet to tip sideways. The photographs from the IDI report showed the bassinet sleep surface at a substantial angle when the strap failure occurred. The infant could have been trapped between the bassinet and side of the play yard.

To ensure a level sleeping environment for infants, the proposal would establish a performance requirement and test method for the maximum allowable rock/swing angle and maximum allowable rest angle of the bassinet/cradle. CPSC staff worked with ASTM to develop these performance requirements and test procedures to reduce potential suffocations and entrapments. The 20° maximum rock/swing angle recommendation is based on the Canadian regulation for cribs and cradles (SOR 86–962, available in its entirety at *http://www.canlii.org/en/ca/laws/regu/sor-86-962/latest/sor-86-962.html*), as well as on observations and measurements made by the Commission on recent model bassinets and cradles. The Canadian crib and cradle regulation is a widely accepted standard. The Commission believes the 20° limit included in the Canadian regulation allows sufficient rocking/swinging motion while maintaining safety. The 5° recommendation for the mattress rest angle is based on conclusions from the Australian study, "The Danger of Freely Rocking Cradles," by S.M. Beal *et al., Journal of Pediatric Child Health* (1995) and the performance requirements from AS/NZS 4385:1996 the Australian/New Zealand standard for infant's rocking cradles. The conclusions from the Australian study suggest that a maximum 5° rest angle from rocking cradles could minimize the risk of an infant rolling and getting trapped in a corner or other entrapment/asphyxiation scenario. The Commission seeks comment on the Australian study and any other literature that may be relevant to the recommendation on the mattress rest angle.

The test method for the maximum allowable rock/swing angle and rest angle performance requirements, the "Rock/Swing Angle test," is found in proposed § 1218.2(b)(11)(i). The test method is based on the procedure developed by the Task Group of the ASTM subcommittee for bassinets and cradles, with specific changes proposed by the Commission. CPSC test data have shown that some products have better angle measurement results (*i.e.,* a less steep angle) with the Newborn CAMI Dummy, and others get better results with the CAMI Dummy, Mark II. Thus, the proposal would require that the testing be done with the Newborn Infant CAMI Dummy, in addition to the CAMI Dummy, Mark II. Test data also showed that the placement of the dummy in the sleep surface can affect the results. For

example, placing the dummy next to the wall in a rocking cradle may produce an angle that is more severe compared to placing the dummy in the center. Therefore, the proposed procedures would describe how the dummy should be placed in the sleep surface. The proposed rule would also provide specific angle measurement procedures. Finally, because some products can swing along the head-to-toe axis, the proposed rule would require such products to be tested in that direction as well.

h. Flatness Angle (Proposed § 1218.2(b)(5)(v), 1218.2(b)(10)(ii), and 1218.2(b)(11)(ii)

Incidents involving bassinet/play yard combinations suggest that a sloped surface or a mattress with multiple seams (mattresses that double as a play yard cover) may have the potential for an asphyxia suffocation hazard, as an infant's head may become entrapped between the sloped mattress and bassinet wall surface. Proposed § 1218.2(b)(10)(ii) would require that the angle of the bassinet or cradle sleeping support surface not be greater than 5° when tested in accordance with the test procedures in proposed § 1218.2(b)(11)(ii). This is to ensure that the mattress does not deform and create a depression, sloped surface, or an appreciable gap between a bassinet wall surface and the mattress.

Proposed § 1218.2(b)(11)(ii) includes testing with the CAMI Infant Dummy, Mark II and the Newborn CAMI Dummy. The test is intended to ensure that the sleep surface of the bassinet or cradle is flat and will not tilt when either CAMI dummy is placed in a corner or edge of the sleeping surface. A dynamic test, which is a force applied over a relatively short period of time, is needed because it will simulate children turning themselves over in the mattress bed area, particularly in a bassinet/play yard combination product with multiple segmented seams.

i. Testing equipment (Proposed § 1218.2(b)(6))

In the standardization and calibration section, proposed § 1218.2(b)(6) would specify the type of angle instrument and its measurement resolution to minimize angle measurement variability. Also, proposed § 1218.2(b)(6) would specify the tolerance and calibration interval for the force gauge required on several performance tests to minimize force measurement variability.

j. Restraints (Proposed § 1218.2(b)(7)(i))

Infants lying on a flat surface do not need restraints and the use of restraints could contribute to a possible strangulation hazard. Therefore, proposed § 1218.2(b)(7)(i) would add language to the standard to clarify that bassinets should not include any restraint system that requires action on the part of the caregiver to secure the restraint.

k. Spacing of Rigid and Fabric-Sided Bassinet/Cradle Components (Proposed § 1218.2(b)(8), 1218.2(b)(10)(iii) and 1218.2(b)(11)(iii))

Seven incidents (among them three deaths) involved recalled products where infants were trapped between structural members of the bassinet. Bassinets and cradles with fabric sides can present similar entrapment hazards from bounded areas of fabric and rigid sides of a bassinet or cradle. ASTM F 2194—07a$^{\varepsilon 1}$ contains performance requirements and test methods for the spacing of rigid sided bassinet and cradle components, intended to minimize torso and/or head entrapments. Because similar hazards are presented by fabric-sided bassinets and cradles, the proposed rule would include performance requirements and test methods for fabric-sided bassinets and cradles as well. For some types of bassinets or cradles with fabric removable covers, it is foreseeable that a parent or caregiver will place fabric back loosely onto a bassinet or cradle after washing and forget to fasten the snaps, zippers, or other fasteners. If the fabric should slip and separate from the structural members of the bassinet/cradle wall, an infant's torso may become entrapped between two structural members of a bassinet/cradle. Also, it is possible that an infant can suffocate if he or she is trapped in a bounded area between structural members and fabric. Thus, the proposed rule would require testing in this configuration, *i.e.,* where the fabric cover is placed loosely on the bassinet or cradle but is unfastened, as well.

The test method for this performance requirement is found in proposed § 1218.2(b)(11)(iii). Proposed § 1218.2(b)(11)(iii) would require that fabric-sided bassinets or cradles comply with the crib spacing requirements in 16 CFR Part 1509.4 when subjected to the 20 pound (lb) probe test. The fabric must not fully release and form a completely bounded opening which would allow complete passage of the torso test probe. The bassinets and cradles must comply both when the fabric cover is fastened and when it is unfastened. The Commission believes it is reasonable to use the crib spacing requirements in 16 CFR Part 1509.4, given that infants of similar ages are utilizing bassinets or cradles and cribs. While the ASTM committee initially proposed a 35 lb force for the probe test, the Commission believes that 20 lbs appears to be consistent with the crib standard (16 CFR Part 1509.6) and is more realistic for infants in the age range of less than five months. ASTM subcommittee for bassinets and cradles, with CPSC staff's input, developed the proposed test procedures.

k. Stability (Proposed § 1218.2(b)(9)(i))

Because at least three of the 87 product-related incidents involved a locking mechanism failure or malfunction, proposed rule § 1218.2(b)(9)(i) would include test scenarios where the bassinet or cradle is tested with the locking mechanism(s) engaged if it is equipped with a locking mechanism to prevent swinging or rocking. This requirement would ensure the stability of the product in modes where the locks are engaged to prevent swinging or rocking.

l. Marking and Labeling Section (Proposed §§ 1218.2(b)(12) Through (b)(14))

Because many deaths and non-fatal incidents involve suffocation due to caregivers and parents using bedding materials (such as pillows and blankets) that are not specified by the manufacturer, and because these incidents cannot be addressed by the design of the bassinet or cradle, it is imperative to improve the warning labels regarding padding and soft bedding in the standard. Consequently, proposed §§ 1218.2(b)(12) through (14) would require certain warning statements or labeling information regarding a suffocation hazard.

F. Request for Comments

This proposed rule begins a rulemaking proceeding under section 104(b) of the CPSIA to issue a consumer product safety standard for bassinets and cradles. We invite all interested persons to submit comments on any aspect of the proposed rule. Comments should be submitted in accordance with the instructions in the **ADDRESSES** section at the beginning of this notice.

G. Effective Date

The Administrative Procedure Act ("APA") generally requires that the effective date of a rule be at least 30 days after publication of the final rule. 5 U.S.C. 553(d). To allow time for bassinets and cradles to come into compliance, the Commission intends that the standard would become effective six months after publication of a final rule. The Commission seeks

comment on how long it would take manufacturers of bassinets and cradles to come into compliance with the rule.

H. Regulatory Flexibility Act

The Regulatory Flexibility Act ("RFA") generally requires that agencies review proposed rules for their potential economic impact on small entities, including small businesses. 5 U.S.C. 603.

1. The Market

Bassinets and cradles are typically produced and/or marketed by juvenile product manufacturers and distributors. There are currently at least 48 known manufacturers or importers supplying bassinets and/or cradles to the United States market. (These counts also include firms solely producing hammocks for infants as well. However, under the standard proposed by the Commission, most hammock products will no longer be able to conform. ASTM has started working on a new standard to cover these products.) Nine firms (19 percent) are domestic importers, 28 firms (58 percent) are domestic manufacturers, and 10 firms (21 percent) are foreign manufacturers. There is an additional domestic firm whose status as a manufacturer or importer could not be determined. Thirteen firms, including the firm whose means of supply could not be determined, supply infant hammocks to the United States market. (There is an additional hammock on the United States market whose supplier could not be determined, as well as a small cottage industry in knitted and crocheted infant hammocks.) The product lines for seven of these firms rely primarily or entirely on infant hammocks and related merchandise. (These determinations were made using information from Dun & Bradstreet and ReferenceUSAGov, as well as firm Web sites. Manufacturers include traditional manufacturers, as well as firms that send out their designs to be manufactured, and firms that import as well but are primarily manufacturers.)

Under Small Business Administration (SBA) guidelines, a manufacturer of bassinets or cradles is small if it has 500 or fewer employees, and an importer is considered small if it has 100 or fewer employees. Based on these guidelines, 22 of the domestic manufacturers and five of the domestic importers known to be supplying the United States market are small. The sizes of the four remaining domestic importers and two additional domestic manufacturers are unknown, but they are likely to be small as well, as is the firm whose supply source could not be determined. All of the firms supplying infant hammocks to the United States market are believed to be small. Two of these small firms are domestic manufacturers, four are domestic importers, six are foreign firms, and one is an unknown domestic firm. There are probably additional unknown small manufacturers and importers operating in the United States market.

JPMA, the major United States trade association that represents juvenile product manufacturers and importers, operates a voluntary certification program for several juvenile products. Products voluntarily submitted by manufacturers are tested against the appropriate ASTM standard and only passing products are allowed to display JPMA's Certification Seal. (*See http://www.jpma.org/pdfs/certfacts08.pdf* for more information.) Approximately 33 percent of firms supply bassinets/cradles to the United States market that have been JPMA certified as compliant with the current ASTM voluntary standard (16 firms). Two of these firms supply more than one relevant product category, where one category of products is JPMA certified and another is not. (For example, one firm has JPMA certified bassinets, but its play yards are not JPMA certified.) Additionally, one firm claims compliance although its products have not been certified by JPMA, and one firm has recently had its product removed from JPMA's list of certified products. Of the small domestic businesses (this includes firms suspected of being small as well those known to be small), 38 percent of manufacturers (nine of 24 firms) and 44 percent of importers (four of nine firms) have products that are ASTM compliant. This includes the small manufacturer that claims compliance with the ASTM standard, but is not part of the JPMA Certification Program, as well as the firms with only some product categories JPMA certified. (It should be noted that non-JPMA certified products will not necessarily fail to comply with the ASTM standard. Although there is currently no testing to support such an assumption for bassinets and cradles, testing of other products has revealed a pattern of non-correlation.)

2. Compliance Requirements of the Proposed Rule

Several of the recommended modifications and new requirements to the standard would be little to no burden on manufacturers or importers. The developmental limit modification (limiting the product use to when a child is able to push up on hands or knees), as well as the changes to suffocation warnings, would only require changes to instructional literature and packaging. The clarifications to what is included and excluded from the definition of the product would effectively eliminate some products from the scope of the proposed standard. This would exclude some firms from compliance requirements entirely, while reducing the number of products for others. As discussed herein, however, the inclusion of infant hammocks will have a substantial effect on many of these suppliers. The possible need to eliminate product restraints would only affect a few firms and the impact would be minimal. (It is possible that the lack of restraints could reduce product desirability from the consumer's perspective. However, this effect would be felt equally across all firms and is not expected to cause a significant reduction in demand for these products as a whole. The Commission believes that restraints are unnecessary for infants who are lying on a flat surface and could pose a strangulation hazard.)

Double action release mechanisms are typically used with multi-use products to convert a rocking bassinet to a stationary one. The expansion of locking and latching mechanism tests to cover double action release mechanisms, as well as the addition of stability testing with these locks engaged, are intended to resist collapsing or movement. There have been several cases where locking mechanisms have failed which caused the infant to roll and press up against the side or corner of the product, posing a suffocation hazard. (*See* Memorandum from Risana Chowdhury, EPI, Directorate for Epidemiology, dated February 3, 2010, Subject: Bassinets, Cradles, and Infant Hammocks-Related Deaths, Injuries and Potential Injuries; 2006–Present. It should be noted that it is unclear how many of these lock failures were double action release mechanisms.) This modification is not expected to pose a substantial burden on firms. However, it is possible that a few firms might have to make product modifications to comply. This would most likely take the form of improved locking/latching mechanisms.

Expanding spacing requirements to openings in soft-sided products could have a substantial effect on a small number of firms. Where products cannot pass the new requirements, substantial modifications and product redevelopment are likely. However, the Commission believes that the severity of the incidents involving these types of products and the recalls that resulted strongly support adding this requirement to the proposed standard.

There are currently no maximum requirements for rocking or rest angles on products intended to rock or swing. Tilting issues have resulted in suffocation hazards similar to those of locking mechanism failures. It is believed that adding maximum angle requirements to the proposed standard could reduce future incidents, while affecting only a small number of firms. The fact that these requirements are already a part of non-United States safety standards indicates that compliance has not proven difficult. However, it is possible that a few firms might require product modifications to achieve compliance with these new requirements.

The maximum sleep surface angle requirement and test is primarily aimed at incidents involving bassinet/play yard combination products. These incidents suggest that products with sloped surfaces or mattresses with multiple seams could pose a suffocation hazard. (*See* Memorandum from Han Lim, ESME, Directorate for Engineering Sciences, dated February 16, 2010, Subject: Engineering Assessment of ASTM F 2194–07 a$^{\varepsilon 1}$, Standard Consumer Safety Specification for Bassinets and Cradles; *see also* Memorandum from Risana Chowdhury, EPI, Directorate for Epidemiology, dated February 3, 2010, Subject: Bassinets, Cradles and Infant Hammocks-Related Deaths, Injuries and Potential Injuries; 2006–Present.) There are numerous such combination products on the market, but only a few known suppliers; therefore, this requirement could require product modifications (and possibly product redesign) by a few firms.

The rock/rest angles and sleep surface angles are likely to disproportionately affect most of the thirteen infant hammock suppliers. Infant hammocks typically hang from a standing base and rock naturally. Most have sleep surfaces that curve, molding to an infant's body.

However, two infant hammock suppliers have flat sleep surfaces. These two firms are not expected to require further modifications to comply with the recommended sleep surface angle requirement, and it is likely that they will be able to meet the rock/rest angle requirements inexpensively, with known fixes running no more than $5 per unit. For example, they could add a clipping mechanism that has been recently developed to limit the swing angle for hammocks involved in product recalls. Alternatively, they may be able to change the number and placement of the ties from which the hammock hangs.

For the remaining eleven firms supplying infant hammocks, even though it would be possible to inexpensively modify their products to meet both the rock/rest angle and sleep surface angle requirements, such modifications would change their products too extensively to remain in the market. A niche market exists among parents with colicky babies for hammocks that curve around babies' bodies and rock naturally. The suppliers, both manufacturers and importers, are unlikely to make even inexpensive modifications to meet the requirements as proposed. Any known fix would eliminate their niche market, thereby eliminating demand for their products, and may drive them out of business.

3. Impact of the Proposal on Small Business

There are approximately 48 firms currently known to be marketing bassinets, cradles, and/or infant hammocks in the United States. Four are large domestic manufacturers and ten are foreign manufacturers or importers. The impact on the remaining 34 small firms—24 small domestic manufacturers and 9 small domestic importers (one of these firms produces only hammocks, while another produces both hammocks and bassinets)—is the focus of the remainder of this analysis. Of these small firms, two domestic manufacturers and four domestic importers (as well as the unknown domestic firm) supply infant hammocks.

Small Manufacturers (Other than Infant Hammock Manufacturers). The impact of the proposed standard (if finalized) on small manufacturers will differ based on whether they are currently compliant with the voluntary ASTM standard. For the 15 firms that are not complaint with the current voluntary standard, the proposed standard could have substantial impact because their products would most likely have to be redesigned. Product development costs include product design, development and marketing staff time, product testing, and focus group expenses. These costs can be high, but they can be treated as new product expenses and amortized over time, as can other one-time costs such as the retooling of manufacturing equipment. There also may be increased costs of production, particularly if modifications to structural integrity are required, which could include additional raw materials. This could potentially increase shipping costs as well. The actual cost of such an effort is unknown, but could be substantial for some firms, particularly those that rely primarily or entirely on bassinets/cradles and related products, such as bedding.

The impact on most of the nine firms that comply with the current voluntary standard is expected to be less substantial. The majority of modifications recommended by the Commission are expected to have only minor effects on small manufacturers. There are, however, three recommended changes (rocking/rest angles, sleep surface angle, and spacing requirements for soft-sided products) that could require product modifications. While these requirements may affect only a few firms, they may require product redevelopment, which has the potential to impose unknown but substantial, costs. The Commission seeks comment on the cost associated with these product modifications.

Even though the proposed standard could potentially affect a few small firms significantly, the costs associated with compliance could be gradually recouped over the sales of numerous units. Bassinets and cradles are unique products designed to provide a sleeping environment for very young children that is smaller and more like the womb. Therefore, other sleeping products are unlikely to be suitable substitutes for these products, allowing firms to pass at least some costs on to consumers and to still compete effectively. (There is also the possibility, however, that some consumers may instead use unsuitable sleeping environments, such as bouncers, as substitutes.)

The scenario just described assumes that only those firms that are JPMA-certified or claim ASTM compliance will meet the voluntary standard's requirements. This is not necessarily the case. CPSC has identified many cases where products not certified by JPMA do comply with the relevant ASTM standard; however, there is insufficient evidence of this for bassinets/cradles to quantify this impact. Additionally, the effect of the new and modified requirements may be less substantial than just outlined to the extent that some products may already comply with non-United States standards with some more rigorous requirements. For example, a product that complies with the Australian standard would pass the proposed rock angle requirement. However, there is insufficient information to quantify this effect.

Small Importers (Other than Infant Hammock Importers). Four of the nine small importers are compliant with the current voluntary standard. Two of these compliant importers supply infant hammocks exclusively. Of the remaining five non-compliant importers, two supply infant hammocks

exclusively. Therefore, if their existing supplier does not come into compliance with the proposed standard, these firms will need to find an alternate source of bassinets and cradles. Manufacturers are likely to pass at least some costs onto importers, making the bassinets/cradles more expensive. (These products would also be expected to be higher quality given the additional safety requirements.) However, importers can follow suit, passing some costs on to consumers. Even if importers responded to the rule by discontinuing the import of their non-complying bassinets and cradles, either replacing them with a complying product or another juvenile product, deciding to import an alternative product would be a reasonable and realistic way to offset any lost revenue given that most import a variety of products. To the extent that some firms may comply with the current voluntary standard or one or more of the new/modified requirements in the proposed standard, the impact of the proposed rule would be lower.

Small Hammock Manufacturers and Importers. The impact of the proposed standard on small hammock manufacturers and importers depends primarily on two factors: (1) Whether their hammocks have a flat sleep surface; and (2) whether their product line consists (primarily or entirely) of infant hammocks and related products. If a supplier's hammocks already have a flat sleep surface (as is the case with one known small domestic manufacturer), it is likely that it will modify its existing infant hammocks. This modification can be made inexpensively based upon a recent product recall fix that minimized the rock/rest angle of these types of products. (The known fixes are unlikely to cost more than $5 per unit.) However, the remaining small infant hammock suppliers, both manufacturers and importers, are unlikely to make even inexpensive modifications to meet the proposed requirements. Doing so would eliminate their niche market for naturally-rocking, flexible-sleep-surface products intended to calm colicky babies. Among the six small domestic firms supplying this niche market, four small importers and one unknown firm rely entirely (or almost entirely) upon infant hammocks and related products. Therefore, the proposed rule, if finalized, may be likely to put these firms out of business. The remaining small domestic manufacturer, however, does supply other products, and the likely elimination of infant hammocks from its product line is not expected to drive it out of business, although it is likely to have a substantial effect on its sales revenue. The Commission seeks comment on the effect of the proposed modifications to the standard on small hammock manufacturers and importers.

3. *Alternatives.* Under section 104 of the CPSIA, the primary alternative that would reduce the impact on small entities is to make the voluntary standard mandatory with no additions or modifications. Adopting the current voluntary standard without any changes could potentially reduce the costs for nine of the 24 small manufacturers and four of the nine small importers who already comply with the voluntary standard. However, the actual reduction in impact for these firms is likely to be smaller, since many would likely not require substantial changes even under the proposed standard. For the six small domestic firms supplying infant hammocks to the United States market, making the current voluntary standard mandatory with no modifications would substantially reduce the impact. It would be likely to prevent five firms from going out of business, while the sixth might be spared a substantial decrease in sales revenue. It also should be noted that eliminating the market for potentially hazardous infant hammocks intended to lull colicky babies may have the unintended consequence of leading caregivers to use similar products intended for older children instead, thereby creating a potentially new hazard.

4. Conclusion of Initial Regulatory Flexibility Analysis

It is possible that the proposed standard, if finalized, could have a significant impact on a few small firms. Most firms supplying bassinets and/or cradles to the United States market are not JPMA-certified as compliant with ASTM's voluntary standard and may therefore require at least some product modifications to achieve compliance. (To the extent that some of the products not certified by JPMA may still comply, the impact will be reduced.) For these firms, as well as a few of those who are JPMA-certified, additional changes to meet the more significant recommended requirements of the proposed standard may be required as well. The extent of these costs is unknown, but since product redevelopment would likely be necessary, it is possible that the costs could be large for some of the firms. However, at least some of these costs are expected to be passed on to consumers without a reduction in the firms' ability to compete due to the unique features associated with these products. The Commission seeks comment on what these costs may be, whether they may be passed on to the consumer, and how these costs will impact small businesses.

The small firms likely to be most significantly impacted by the staff-recommended rule, however, are those supplying infant hammocks intended for colicky babies. The majority of these firms have focused their entire product line on these goods and the required modifications would eliminate demand for their products, and may drive them out of business.

I. Environmental Considerations

The Commission's regulations provide a categorical exemption for the Commission's rules from any requirement to prepare an environmental assessment or an environmental impact statement as they "have little or no potential for affecting the human environment." 16 CFR 1021.5(c)(2). This proposed rule falls within the categorical exemption.

J. Paperwork Reduction Act

This proposed rule contains information collection requirements that are subject to public comment and review by the Office of Management and Budget (OMB) under the Paperwork Reduction Act of 1995 (44 U.S.C. 3501–3520). We describe the provisions in this section of the document with an estimate of the annual reporting burden. Our estimate includes the time for reviewing instructions, searching existing data sources, gathering and maintaining the data needed, and completing and reviewing each collection of information.

We particularly invite comments on: (1) Whether the collection of information is necessary for the proper performance of the CPSC's functions, including whether the information will have practical utility; (2) the accuracy of the CPSC's estimate of the burden of the proposed collection of information, including the validity of the methodology and assumptions used; (3) ways to enhance the quality, utility, and clarity of the information to be collected; and (4) ways to minimize the burden of the collection of information on respondents, including through the use of automated collection techniques, when appropriate, and other forms of information technology.

Title: Safety Standard for Bassinets and Cradles.

Description: The proposed rule would require each bassinet and cradle to comply with ASTM F 2194–07a$^{\varepsilon 1}$, "Standard Consumer Safety Specification for Bassinets and Cradles." Sections 8 and 9 of ASTM F 2194–07a$^{\varepsilon 1}$

contain requirements for marking and instructional literature.

Description of Respondents: Persons who manufacture bassinets and cradles.

We estimate the burden of this collection of information as follows:

TABLE 1—ESTIMATED ANNUAL REPORTING BURDEN

16 CFR section	Number of respondents	Frequency of responses	Total annual responses	Hours per response	Total burden hours
1218.2(a)	30	7	30	0.5	105

There are no capital costs or operating and maintenance costs associated with this collection of information.

Our estimates are based on the following:

Proposed § 1218.2(a) would require each bassinet and cradle to comply with ASTM F 2194–07a$^{\varepsilon 1}$. Sections 8 and 9 of ASTM F 2194–07a$^{\varepsilon 1}$ contain requirements for marking and instructional literature that are disclosure requirements, thus falling within the definition of "collections of information" at 5 CFR 1320.3(c).

Section 8.1.1 of ASTM F 2194–07a$^{\varepsilon 1}$ requires that the name and either the place of business (city, State, and mailing address, including zip code) or telephone number, or both of the manufacturer, distributor, or seller be clearly and legibly marked on each product and its retail package. Section 8.1.2 of ASTM F 2194–07a$^{\varepsilon 1}$ requires that a code mark or other means that identifies the date (month and year as a minimum) of manufacture" be clearly and legibly marked on "each product and its retail package. In both cases, the information must be placed on both the product and the retail package.

There are 48 known firms supplying bassinets and/or cradles to the United States market. Eighteen of the 48 firms are known to already produce labels that comply with sections 8.1.1 and 8.1.2 of the standard, so there would be no additional burden on these firms. The remaining 30 firms are assumed to already use labels on both their products and their packaging, but would need to make some modifications to their existing labels. The estimated time required to make these modification is about 30 minutes per model. Each of these firms supplies an average of 7 different models of bassinets/cradles, therefore, the estimated burden hours associated with labels is 30 minutes × 30 firms × 7 models per firm = 6,300 minutes or 105 annual hours.

The Commission estimates that hourly compensation for the time required to create and update labels is $27.78 (Bureau of Labor Statistics, September 2009, all workers, goods-producing industries, Sales and office, Table 9). Therefore, the estimated annual cost associated with the Commission recommended labeling requirements is approximately $2,917 ($27.78 per hour × 105 hours = $2,916.90, which we have rounded up to $2,917).

Section 9.1 of ASTM F 2194–07a$^{\varepsilon 1}$ requires instructions to be supplied with the product. Bassinets and cradles are products that generally require some installation and maintenance, and products sold without such information would not be able to successfully compete with products supplying this information. Under OMB's regulations (5 CFR 1320.3(b)(2)), the time, effort, and financial resources necessary to comply with a collection of information that would be incurred by persons in the "normal course of their activities" are excluded from a burden estimate where an agency demonstrates that the disclosure activities needed to comply are "usual and customary." Therefore, because the CPSC is unaware of bassinets and cradles that: (a) Generally require some installation, but (b) lack any instructions to the user about such installation, we tentatively estimate that there are no burden hours associated with the instruction requirement in section 9.1 of ASTM F 2194–07a$^{\varepsilon 1}$ because any burden associated with supplying instructions with a bassinet or cradle would be "usual and customary" and not within the definition of "burden" under OMB's regulations.

Based on this analysis, the requirements of the Commission-recommended bassinet and cradle rule would impose a burden to industry of 105 hours at a cost of $2,917 annually.

In compliance with the Paperwork Reduction Act of 1995 (44 U.S.C. 3507(d)), we have submitted the information collection requirements of this rule to OMB for review. Interested persons are requested to fax comments regarding information collection by May 28, 2010, to the Office of Information and Regulatory Affairs, OMB (*see* **ADDRESSES**).

K. Preemption

Section 26(a) of the CPSA, 15 U.S.C. 2075(a), provides that where a "consumer product safety standard under [the CPSA]" is in effect and applies to a product, no State or political subdivision of a State may either establish or continue in effect a requirement dealing with the same risk of injury unless the State requirement is identical to the Federal standard. (Section 26(c) of the CPSA also provides that States or political subdivisions of States may apply to the Commission for an exemption from this preemption under certain circumstances.) Section 104(b) of the CPSIA refers to the rules to be issued under that section as "consumer product safety rules," thus implying that the preemptive effect of section 26(a) of the CPSA would apply. Furthermore, in *Natural Resources Defense Council* v. *CPSC,* 597 F. Supp. 2d 370 (S.D. NY 2009), the court held that "[d]esignating the phthalate prohibitions [in section 108 of the CPSIA] as consumer product safety standards brings them within a well established statutory preemption scheme [of section 26(a) of the CPSA]." Therefore, a rule issued under section 104 of the CPSIA will invoke the preemptive effect of section 26(a) of the CPSA when it becomes effective.

L. Certification

Section 14(a) of the Consumer Product Safety Act ("CPSA") imposes the requirement that products subject to a consumer product safety rule under the CPSA, or to a similar rule, ban, standard, or regulation under any other act enforced by the Commission, be certified as complying with all applicable CPSC-enforced requirements. 15 U.S.C. 2063(a). Such certification must be based on a test of each product or on a reasonable testing program or, for children's products, on tests on a sufficient number of samples by a third-party conformity assessment body accredited by the Commission to test according to the applicable requirements. As discussed in Section K, section 104(b)(1)(B) of the CPSIA refers to standards issued under that section, such as the rule for bassinets and cradles being proposed in this notice, as "consumer product safety standards." Furthermore, the designation as consumer product safety standards subjects such standards to certain sections of the CPSA, such as

section 26(a), regarding preemption. By the same reasoning, such standards would also be subject to section 14 of the CPSA. Therefore, any such standard would be considered to be a consumer product safety rule to which products subject to the rule must be certified.

In addition, the CPSIA is another act enforced by the Commission, and the standards issued under section 104(b)(1)(B) of the CPSIA are similar to consumer product safety rules. For this reason also, bassinets and cradles will need to be tested and certified as complying with the safety standard when it becomes effective. Because bassinets and cradles are children's products, they must be tested by a third-party conformity assessment body accredited by the Commission. In the future, the Commission will issue a notice of requirements to explain how laboratories can become accredited as a third-party conformity assessment body to test to the new safety standard. (Bassinets and cradles also must comply with all other applicable CPSC requirements, such as the lead content and phthalate content requirements in sections 101 and 108 of the CPSIA, and the tracking label requirement in section 14(a)(5) of the CPSA, and the consumer registration form requirements in section 104 of the CPSIA.)

List of Subjects in 16 CFR 1218

Consumer protection, Imports, Incorporation by reference, Infants and Children, Labeling, Law enforcement, and Toys.

Therefore, the Commission proposes to amend Title 16 of the Code of Federal Regulations by adding a new part 1218 to read as follows:

PART 1218—SAFETY STANDARD FOR BASSINETS AND CRADLES

Sec.

1218.1 Scope, application and effective date.
1218.2 Requirements for bassinets and cradles.

Authority: The Consumer Product Safety Improvement Act of 2008, Pub. L. 110–314, § 104, 122 Stat. 3016 (August 14, 2008).

§ 1218.1 Scope, application and effective date.

This part establishes a consumer product safety standard for bassinets and cradles manufactured or imported on or after (insert date 6 months after date of publication of a final rule in the **Federal Register**).

§ 1218.2 Requirements for bassinets and cradles.

(a) Except as provided in paragraph (b) of this section, each bassinet and cradle must comply with all applicable provisions of ASTM F 2194–07a$^{\varepsilon 1}$, Standard Consumer Safety Specification for Bassinets and Cradles, approved October 1, 2007. The Director of the Federal Register approves this incorporation by reference in accordance with 5 U.S.C. 552(a) and 1 CFR part 51. You may obtain a copy from ASTM International, 100 Bar Harbor Drive, P.O. Box 0700, West Conshohocken, PA 19428; *http://www.astm.org.* You may inspect a copy at the Office of the Secretary, U.S. Consumer Product Safety Commission, Room 502, 4330 East West Highway, Bethesda, MD 20814, telephone 301–504–7923, or at the National Archives and Records Administration (NARA). For information on the availability of this material at NARA, call 202–741–6030, or go to: *http://www.archives.gov/federal_register/code_of_federal_regulations/ibr_locations.html.*

(b) Comply with the ASTM F 2194–07a$^{\varepsilon 1}$ standard with the following additions or exclusions:

(1) Instead of complying with section 1.3 of ASTM F 2194–07a$^{\varepsilon 1}$, comply with the following:

(i) 1.3 This consumer safety performance specification covers products intended to provide sleeping accommodations only for infants up to approximately 5 months of age or when the child begins to push up on hands and knees, whichever comes first. Products used in conjunction with an infant swing are not covered by this specification.

(ii) [Reserved]

(2) Following section 2.3 of ASTM F 2194–07a$^{\varepsilon 1}$, use the following figure:

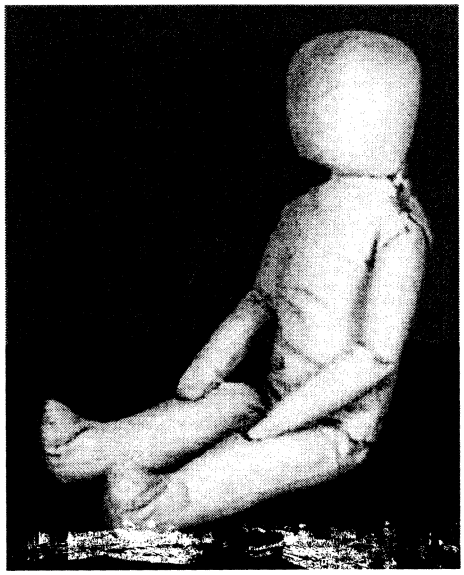

FIGURE 1A - Newborn CAMI Dummy

(ii) [Reserved]

(3) Instead of complying with section 3.1.1 of ASTM F 2194–07a$^{\varepsilon 1}$, comply with the following:

(i) 3.1.1 *Bassinet/cradle, n*—small bed designed exclusively to provide sleeping accommodations for infants

supported by free standing legs, a wheeled base, a rocking base, or which can swing relative to a stationary base. Products such as swings, full and non-full size cribs, hand carrying baskets, and travel beds are not included, unless the product is a bassinet/cradle attachment per the definition in Section 3.1.2.

(ii) [Reserved]

(4) Instead of complying with section 3.1.2 of ASTM F 2194–07a$^{\varepsilon 1}$, comply with the following:

(i) 3.1.2 *bassinet/cradle accessory, n*—accessory with a rigid frame that attaches to non-full size crib, play yard, or other base unit designed to convert the accessory into a bassinet/cradle.

(ii) [Reserved]

(5) In addition to section 3.1.11 of ASTM F 2194–07a$^{\varepsilon 1}$, comply with the following:

(i) 3.1.12 *Double action release mechanism, n*—mechanism requiring either two consecutive actions, the first of which must be maintained while the second is carried out or two separate and independent single action locking mechanisms that must be activated simultaneously to fully release.

(ii) 3.1.13 *removable cover, n*—a fabric cover, containing snaps or other fasteners such as zippers, Velcro, or buttons used to attach to a bassinet/cradle frame that requires consumer action as a step for removal or adjustment.

(iii) 3.1.14 *Maximum deflection angle, n*—the maximum rock/swing angle measurement allowed by the product design in the manufacturer's use position in the manner normally associated with rocking/swinging and intended by the manufacturer when tested in accordance with 7.8.

(iv) 3.1.15 *Rest angle, n*—the resulting angle measurement of bassinet/cradle sleeping surface or tilt angle of the bassinet/cradle bed after the maximum deflection angle is applied and released and the product has come to a complete rest when tested in accordance with 7.8.

(v) 3.1.16 *Flatness angle, n*—the resulting angle measurement of the sleep support surface or tilt angle of the bassinet/cradle bed when a compression force is applied to the chest of the CAMI dummy in accordance with 7.9.

(6) In addition to section 4.5 of ASTM F 2194–07a$^{\varepsilon 1}$ comply with the following:

(i) 4.6 Angle measurements shall be obtained using a digital inclinometer capable of 0.1° minimum resolution.

(ii) 4.7 Equipment—Force gauge with a range of 0 to 25 lbf (110N), with a maximum tolerance of ± 0.25 lbf (1.11N) or a range of 0 to 50 lbf (222N) with a maximum tolerance of ± 0.25 lbf (1.11N). A calibration interval shall be maintained for the force gauges which will ensure that the accuracy does not drift beyond the stated tolerances.

(7) In addition to section 5.12 of ASTM F 2194–07a$^{\varepsilon 1}$ comply with the following:

(i) 5.13 *Restraints*— The bassinet shall not include any restraints system which requires action on the part of the caregiver to secure the restraint.

(ii) [Reserved]

(8) Instead of complying with section 6.1 of ASTM F 2194–07a$^{\varepsilon 1}$, comply with the following:

(i) 6.1 *Spacing of Rigid and Fabric-Sided Bassinet/Cradle Components or Bassinet/Cradle attachment Components*—Spacing must comply with 16 CFR Part 1509 Section 1509.4 when tested according to 7.1 and 7.10.

(ii) [Reserved]

(9) Instead of complying with section 6.4 of ASTM F 2194–07a$^{\varepsilon 1}$, comply with the following:

(i) 6.4 *Stability*—A product in all manufacturers' recommended use positions, including positions where the locks are engaged for preventing rocking/swinging motion of the sleeping surface, shall not tip over and shall retain the CAMI Infant Dummy, Mark II, when subjected to the test described in 7.4.

(ii) [Reserved]

(10) In addition to section 6.6 of ASTM F 2194–07a$^{\varepsilon 1}$ comply with the following:

(i) 6.7 *Rock/Swing Angle*—Bassinets or cradles that incorporate a rocking/swinging feature shall meet the following:

(A) 6.7.1 Maximum deflection angle measurement on any reading shall not exceed 20° when tested in accordance with 7.8.

(B) 6.7.2 The arithmetic mean of the rest angle measurements shall not exceed 5° when tested in accordance with 7.8.

(ii) 6.8: *Bassinet/Cradle Surface*—The angle of the bassinet or cradle sleeping support surface or the tilt angle of the bassinet/cradle bed shall not be greater than 5° when tested in accordance with 7.9.

(iii) 6.9 *Fabric-Sided Enclosed Openings*—For bassinets or cradles with fabric sides, the fabric shall not release and form a completely bounded opening that allows the complete passage of the torso probe (Figure 3A) when tested in accordance with Section 7.10.

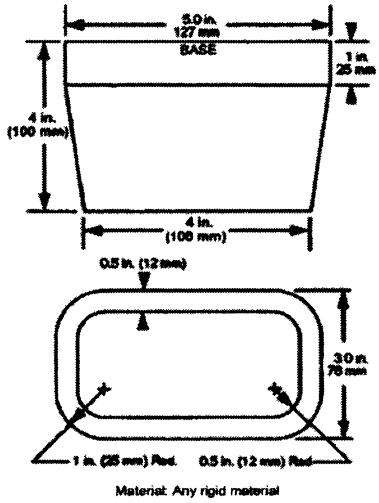

Figure 3A – Test Probe for Fabric Sided Testing

(11) In addition to section 7.7 of ASTM F 2194–07a$^{\varepsilon 1}$ comply with the following:

(i) 7.8 *Rock/Swing Angle Test:*

(A) 7.8.1 *Side to Side Rock/Swing Test*—for bassinets/cradles that have a side-to-side rocking/swinging feature.

(B) 7.8.1.1 Assemble bassinet/cradle in accordance with manufacturer's instructions and, if necessary, place the bassinet/cradle in rocking/swinging mode.

(C) 7.8.1.2 Place the bassinet/cradle and the inclinometer on a flat level horizontal plane (0° ± 0.5°) to establish a reference plane. Zero the inclinometer.

(D) 7.8.1.3 Disengage any locking mechanisms designed to prevent the unit from rocking/swinging, per the manufacturer's instructions.

(E) 7.8.1.4 Place the CAMI Infant Dummy, MARK II belly up, with both arms contacting the torso, and the right arm touching the left side wall in the bassinet cradle. *See* Figure 4A.

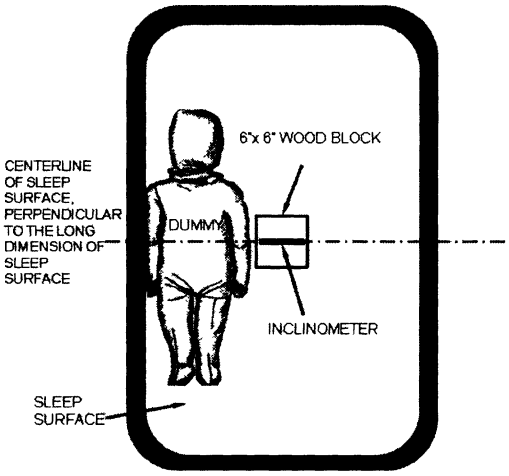

Figure 4A: Top View of CAMI Dummy and Inclinometer Placed in the Sleep Surface for the Side-to-Side Swing Test

(F) 7.8.1.5 Manually deflect and hold the bassinet/cradle to the maximum side-to-side rock/swing angle allowed by the product design in the manufacturer's use position in the manner normally associated with rocking/swinging and intended by the manufacturer. Record the maximum deflection angle.

(G) 7.8.1.6 Release the bassinet/cradle and allow it to come to rest unassisted.

(H) 7.8.1.7 Place the 6 in. x 6 in. wood block (ref. Section 7.3.2) less than 1 in. from the dummy, where the horizontal center of the block is in line with the centerline of the mattress bed perpendicular to the head-to-toe axis of the dummy. *See* Figure 4A. If a block cannot be placed in the prescribed location inside the mattress bed area due to mattress size constraints, dummy position, or if the mattress is substantially curved, then mount a 1 in. aluminum angle (ref. Section 7.4.2) on top of the rigid bassinet frame. *See* Figure 4B.

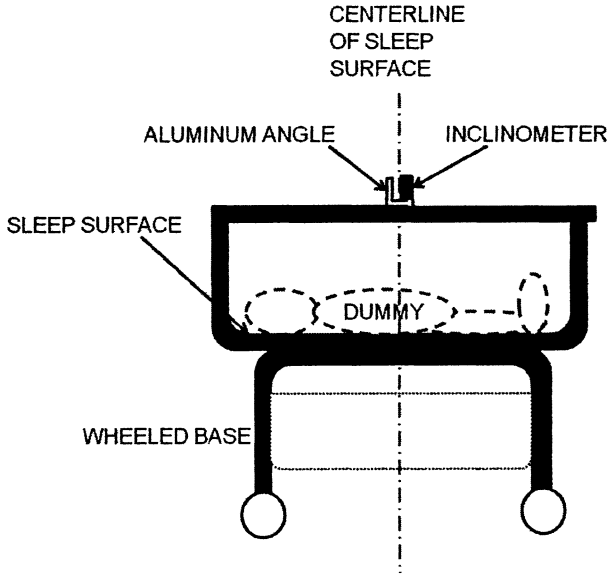

Figure 4B: Side View of CAMI Dummy Placed in the Sleep Surface with the Inclinometer and Aluminum Angle Mounted on Top of the Product

(I) 7.8.1.8 Place the inclinometer on the top center of the 6 in. x 6 in. wood block or aluminum angle and record the resulting angle.

(J) 7.8.1.9 Repeat steps 7.8.1.2 to 7.8.1.8 four additional times. Record each side-to-side maximum deflection angle and each resulting side-to-side rest angle measurement. Calculate the arithmetic mean of the five side-to-side rest angle measurements.

(K) 7.8.1.10 Repeat steps 7.8.1.2 to 7.8.1.9 except place the CAMI infant Dummy, Mark II belly up, with both arms contacting the torso, and the left arm touching the right side wall in the bassinet/cradle.

(L) 7.8.1.11 Repeat steps 7.8.1.2 to 7.8.1.10 using a CAMI Newborn Dummy.

(M) 7.8.2 *Front-to-Back Rock/Swing Test*—for bassinets/cradles that have a front-to-back (head-to-toe) rocking/swinging feature.

(N) 7.8.2.1 Assemble bassinet/cradle in accordance with manufacturer's instructions and, if necessary, place the bassinet/cradle in the front-to-back rocking/swinging mode.

(O) 7.8.2.2 Place the bassinet/cradle and the inclinometer on a flat level horizontal plane (0° ± 0.5°) to establish a test plane. Zero the inclinometer.

(P) 7.8.2.3 Disengage any locking mechanisms designed to prevent the unit from rocking/swinging, per the manufacturer's instructions.

(Q) 7.8.2.4 Place the CAMI Infant Dummy, Mark II belly up, with both arms contacting the torso, and the crown of the dummy's head touching the inside wall at one end of the sleep surface and the dummy's head-to-toe centerline is in line with the centerline perpendicular to the short dimension of the sleep surface. *See* Figure 4C.

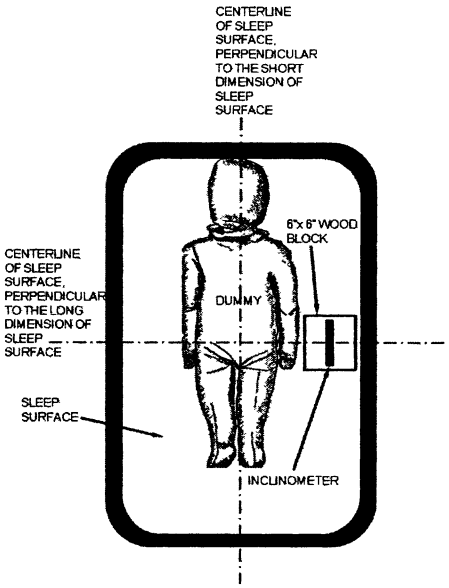

Figure 4C: Top View of CAMI Dummy and Inclinometer Placed in the Sleep Surface for the Front-to-Back Swing Test

(R) 7.8.2.5 Manually deflect and hold the bassinet/cradle to the maximum rock/swing angle in the front-to-back direction allowed by the product design in the manufacturer's use position in the manner normally associated with rocking and intended by the manufacturer. Record the maximum rock/swing angle.

(S) 7.8.2.6 Release the bassinet/cradle and allow it to come to rest unassisted.

(T) 7.8.2.7 Place the 6 in. x 6 in. wood block (ref. Section 7.3.2) where the horizontal centerline of the wood block is in line with the horizontal centerline of the sleep surface. *See* Figure 4. If the wood block cannot be placed in the prescribed location on the mattress bed area due to mattress size constraints, dummy position, or if the mattress is substantially curved, then mount a 1 in. aluminum angle (ref. Section 7.4.2) spanning the top of the rigid bassinet frame in a direction parallel to the long dimension of the bassinet.

(U) 7.8.2.8 Place the inclinometer on the top center of the 6 in. x 6 in. wood block or aluminum angle. Record the resulting rest angle.

(V) 7.8.2.9 Repeat steps 7.8.2.2 to 7.8.2.8 four additional times. Record each front-to-back maximum deflection angle and each resulting rest angle measurement. Calculate the arithmetic mean of the five rest angle measurements.

(W) 7.8.2.10 Repeat 7.8.2.2 to 7.8.2.9 with the CAMI Dummy, Mark II feet touching the inside at one end of the sleep surface and the dummy's torso centerline in line with the centerline perpendicular to the short dimension of the sleep surface.

(X) 7.8.2.11 Repeat 7.8.2.2 to 7.8.2.10 with the Newborn CAMI Dummy.

(ii) 7.9 *Bassinet/Cradle Flatness Angle Test*

(A) 7.9.1 Disable the rocking/swinging feature if the product is equipped with such a feature. Place the CAMI Infant Dummy, Mark II belly up, on the sleep surface in the location most prone to creating a depression, slope, or tilt (*e.g.*, near a seam in the mattress, in a corner, *etc.*).

(B) 7.9.2 Place the 6 in. x 6 in. wood block (ref. Section 7.3.2) on the chest of the dummy and apply a 10.0 ± 0.5 lb compression force within 2 seconds with a force gauge. Discontinue applying the force.

(C) 7.9.3 Place the 6 in. x 6 in. wood block (ref. Section 7.3.2) less than 1 in. from the dummy, where the horizontal center of the block is in line with the horizontal centerline of the dummy. If the wood block cannot be placed inside the sleep surface of a rocking/swinging product due to mattress size constraints, dummy position, or if the mattress is substantially curved, then mount the 1 in. aluminum angle (ref. Section 7.4.2) on top of the rigid bassinet frame.

(D) 7.9.4 Record the resulting flatness angle along the dummy's head-to-toe axis and at 90° from the head-to-toe axis.

(E) 7.9.5 Repeat steps 7.9.1 to 7.9.4 four additional times. Record each angle measurement and calculate the arithmetic mean of the five angle measurements in the head-to-toe direction and 90° from the head-to-toe axis.

(F) 7.9.6 If the dummy's height is equivalent to or less than the width of the sleep surface then rotate the dummy 90° and repeat steps 7.9.1 to 7.9.5. *See* Figure 4D.

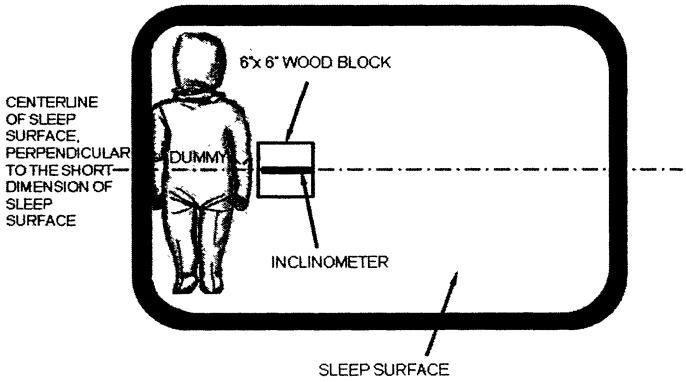

Figure 4D: Top View of CAMI Dummy and Inclinometer, Rotated 90°, Placed in the Sleep Surface for the Mattress Flatness Test

(G) 7.9.7 Repeat 7.9.1 to 7.9.6 with the Newborn CAMI Dummy.

(iii) 7.10 *Fabric Release Test Methods for Enclosed Openings.*

(A) 7.10.1 Assemble and place the bassinet/cradle in the manufacturers use position.

(B) 7.10.2 With the torso test probe attached to a force gauge, place the small end of the probe against the fabric inside wall of the product and any structural elements in any locations deemed most likely to fail.

(C) 7.10.3 Apply a 20 lb force to the probe over a period of 5 seconds and hold for an additional 5 seconds.

(D) 7.10.4 Upon completion of 7.10.3, if an opening occurs in a location, other than the location being tested, release the probe from the original test location and repeat 7.10.3 at this additional location without adjusting the fabric.

(E) 7.10.5 If the product has a removable cover, unfasten all fasteners and/or snaps and repeat 7.10.2 to 7.10.4.

(F) 7.10.6 Repeat 7.10.1 to 7.10.5 in all manufacturers recommended use positions. For multiple use products, the test shall be performed in all possible use modes.

(12) Instead of complying with section 8.3.1 of ASTM F 2194–07a$^{\varepsilon 1}$, comply with the following:

(i) 8.3.1 In the warning statements, the safety alert symbol

and the word WARNING shall precede the warning statements at each location where warnings are provided and shall not be less than 0.2 in. (5 mm) high. The remainder of the text shall be in letters not less than 0.1 in. (2.5 mm) high except as specified in 8.4.2.

(ii) [Reserved]

(13) Instead of complying with section 8.4.2.1 of ASTM F 2194–07a$^{\varepsilon 1}$, comply with the following:

(i) Infants have suffocated in gaps between extra padding and side of the bassinet/cradle and on soft bedding. Use only the pad provided by manufacturer. NEVER add a pillow, comforter, or another mattress for padding.

(ii) [Reserved]

(14) In addition to the changes to ASTM F 2194–07a$^{\varepsilon 1}$ in paragraph (b)(13), comply with the following:

(i) 8.4.2.2 The words "SUFFOCATION HAZARD" shall be bold face type not less than 0.2 in.
(5 mm) high. The words "Infants have suffocated" shall be in characters whose upper case is not less than 0.16 in.
(4 mm) high. The remainder of the warning statement shall be standard type style whose upper case shall be at least 0.1 in. (2.5 mm) high.

(ii) [Reserved]

Dated: March 30, 2010.

Alberta Mills,

Acting Secretary, U.S. Consumer Product Safety Commission.

[FR Doc. 2010–7667 Filed 4–27–10; 8:45 am]

BILLING CODE 6355–01–P

DEPARTMENT OF TRANSPORTATION

National Highway Traffic Safety Administration

23 CFR Parts 1200 and 1300

[Docket No. NHTSA–2010–0054]

Federal Motor Vehicle Safety Standards; Small Business Impacts of Motor Vehicle Safety

AGENCY: National Highway Traffic Safety Administration (NHTSA), Department of Transportation (DOT).

ACTION: Notice of regulatory review; Request for comments.

SUMMARY: NHTSA seeks comments on the economic impact of its regulations on small entities. As required by section 610 of the Regulatory Flexibility Act, we are attempting to identify rules that may have a significant economic impact on a substantial number of small entities. We also request comments on ways to make these regulations easier to read and understand. The focus of this notice is rules that specifically relate to passenger cars, multipurpose passenger vehicles, trucks, buses, trailers, incomplete vehicles, motorcycles, and motor vehicle equipment.

DATES: You should submit comments early enough to ensure that Docket Management receives them not later than June 28, 2010.

ADDRESSES: You may submit comments [identified by DOT Docket ID Number NHTSA–2010–0054] by any of the following methods:

- *Federal eRulemaking Portal:* Go to *http://www.regulations.gov.* Follow the online instructions for submitting comments.
- *Mail:* Docket Management Facility: U.S. Department of Transportation, 1200 New Jersey Avenue, SE., West Building Ground Floor, Room W12–140, Washington, DC 20590–0001
- *Hand Delivery or Courier:* West Building Ground Floor, Room W12–140, 1200 New Jersey Avenue, SE., between 9 a.m. and 5 p.m. ET, Monday through Friday, except Federal holidays.
- *Fax:* 202–493–2251

Instructions: For detailed instructions on submitting comments and additional information see the Comments heading of the Supplementary Information section of this document. Note that all comments received will be posted without change to *http://*